Getting started with the STEVAL-PROTEUS1 evaluation kit for condition monitoring based on the 2.4 GHz STM32WB5MMG module

Introduction

The STEVAL-PROTEUS1 is an evaluation tool designed for temperature and vibration monitoring. It is based on a 2.4 GHz multiprotocol wireless SoC to address machine or facility condition monitoring for industrial applications.

The evaluation board simplifies the prototyping, evaluation and development of wireless industrial sensor nodes to enable the predictive maintenance. It comes with a LiPo battery and a plastic case. All components are mounted exclusively on the top side of the PCB to ensure an easy mounting on other equipment. The included comprehensive software and the firmware libraries with time and frequency domain vibration analysis ease your software customization and can reliably improve your time-to-market.

The main board includes the STM32WB5MMG ultra-low-power and small form factor wireless radio module. This module is FCC and IC certified (FCC ID: YCP-STM32WB5M001 and IC: 8976A-STM32WB5M01). It is based on the STM32WB55VGY wireless SoC, compliant with the Bluetooth® Low Energy SIG specification v5.2, ZigBee 3.0, and IEEE 802.15.4-2011.

The powerful Arm®-based Cortex-M4 with FPU and large memory allows running the embedded algorithm at node level.

The multiprotocol support ensures the development of applications with different types of connectivity, using a unique hardware. Moreover, the main board integrates the STSAFE-A110 secure element that provides authentication and secure data management services to a local or remote host.

The IIS3DWB high bandwidth (up to 6 kHz) accelerometer, the IIS2DLPC ultra-low power, and the ISM330DHCX inertial module (accelerometer and gyroscope) with MLC make the hardware ideal for a customized vibration monitoring development.

The STTS22H high accuracy temperature sensor has been integrated in the board, far from the heat noise sources (the power management and the microcontroller) to provide a more precise temperature measurement. Its exposed pad sensor feature allows the temperature sensor to be in contact with the surface target equipment.

An on-board external memory is connected via QSPI to the STM32WB5MMG module for data buffering and event storage.

The STEVAL-PROTEUS is LiPo rechargeable battery-powered. It can also be powered via USB (5 V at 500 mA) or via a primary battery (which is not included in the kit).

The power management features the ST1PS02 400 mA step down converter for low-power applications and the STBC02 for battery charging.

An application example firmware with dedicated algorithms is preloaded in the STM32WB5MMG flash memory for easy demonstration of wireless vibration and temperature node monitoring.

Figure 1. Main board of the STEVAL-PROTEUS1 evaluation kit

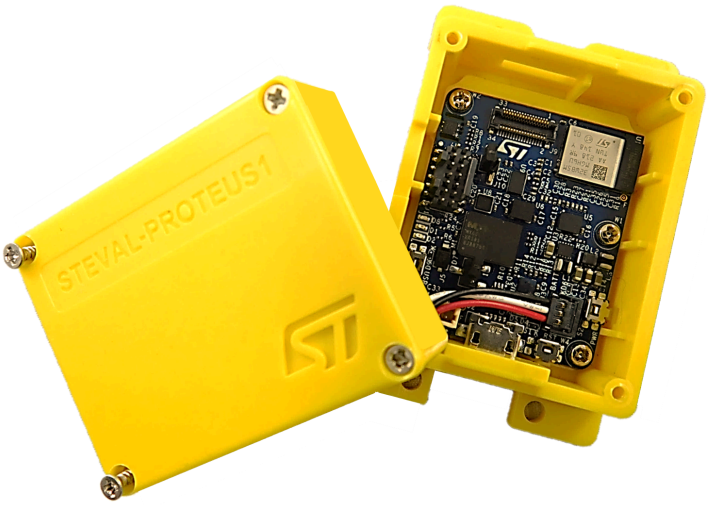

1 Overview

1.1 Precautions for use

Warning: *Charge your device with a DC 5 V–500 mA USB charger at a temperature from 10°C to 35°C.*

The kit must be used within the working temperature range. It must never be exposed to excessive heat such as direct sunlight, fire, or heating equipment.

Danger: *Use only USB chargers equipped with short-circuit protections to prevent fire hazard.*

Danger: *Use only the LiPo battery provided with the kit (HiMax 752535). A replacement of the battery with an incorrect type can defeat a safeguard.*

LiPo batteries can be damaged and even explode if they are short-circuited or overcharge or with an improper usage, such as mechanical crushes, hot oven, or battery cutting.

Warning: *Pay attention to the sharp pins.*

1.2 Features

- Kit content:
  - the STEVAL-PROTEUS main board
  - LiPo battery 3.7 V, 480 mAh
  - Plastic case and screws
- Main components on the STEVAL-PROTEUS:
  - STM32WB5MMG - ultra-low-power module, dual core 32-bit Arm Cortex-M4 MCU 64 MHz, Cortex-M0+ 32 MHz for real-time radio layer, with 1 Mbyte of flash memory, 256kbyte SRAM, and 2.4GHz RF supporting Bluetooth® Low Energy 5, 802.15.4, Zigbee 3.0, and Thread
  - IIS3DWB - ultra-wide bandwidth up to 6 kHz, low noise, 3-axis digital accelerometer
  - ISM330DHCX - iNEMO inertial module with machine learning core and finite state machine with digital output
  - IIS2DLPC - high-performance ultra-low-power 3-axis digital accelerometer
  - STTS22H - low-voltage, ultra-low-power, 0.5°C accuracy I²C/SMBus 3.0 temperature sensor
  - 2Gb QSPI NOR flash memory for data storage
  - STSAFE-A110 - secure element
  - STBC02 - Li-Ion linear battery charger with LDO
  - ST1PS02 - step-down converter with digital voltage selection
  - Three push-buttons (one reset, one user, one power-on battery)
  - Four LEDs (three user LEDs, one STBC02 LED status)
  - Flexible power supply options - LiPo battery, USB power, and primary battery
  - SWD connector for debugging and programming capability
  - 34-pin expansion connector compliant with STMOD+
- Temperature monitoring and vibration preprocessing data in the time and frequency domain, machine learning, and AI to address industrial asset monitoring
- STBLESensClassic app support for Android and iOS to ease the board and processing configuration, condition monitoring, and anomaly detection
- Comprehensive software libraries and demonstration examples available

1.3 RF specifications

- RF output power up to +6 dBm
- Operating band: 2400 MHz to 2480 MHz

1.4 Package components

The STEVAL-PROTEUS1 evaluation kit package includes:

1. a main board (dimensions: 29 mm x 35 mm)
2. a LiPo battery 3.7 V 480 mAh (HiMax)
3. a plastic case and some screws

Figure 2. STEVAL-PROTEUS1 package components

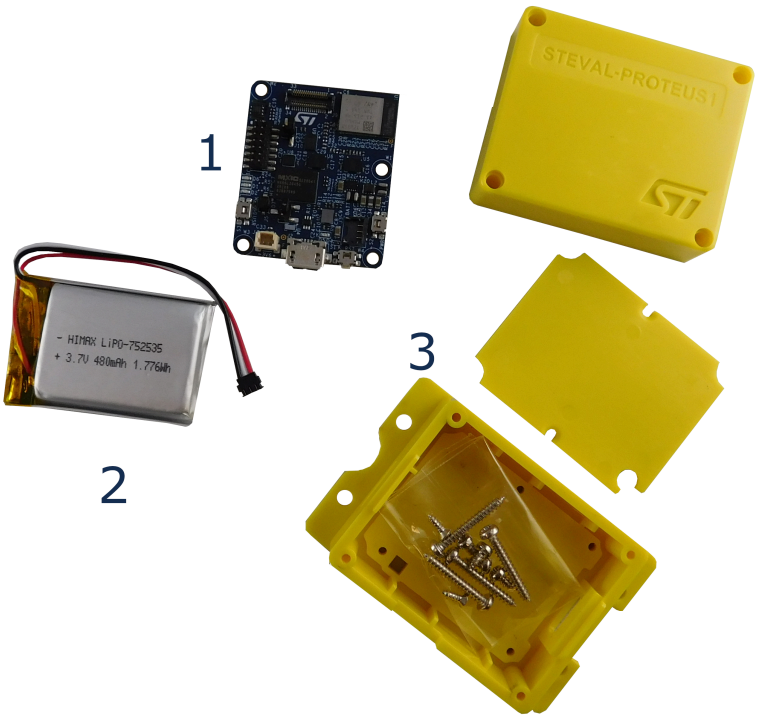

1.5 Ordering information

The kit order code is STEVAL-PROTEUS1, which is identified with the finished good code of STEVAL$PROTEUS1A. The main board included in the kit is the STEVAL-PROTEUS, which is identified with the finished good code of STEVAL$PROTEUSA.

2 Development environment

2.1 System requirements

The STEVAL-PROTEUS1 comes with a preloaded application firmware.

To run the demo, you need:

- the STBLESensClassic app to be installed in your smartphone (Android or iOS)

To develop your own project or customize the available one, you also need:

- a USB Type-A to Micro-B cable
- a Windows™ (version 7 or higher) PC
- the STLINKV3-MINI for programming and debugging

2.2 Development toolchains

- IAR Embedded Workbench for Arm (from V.8.50.9)
- Keil® MDK-ARM (from V.5.32)
- STMicroelectronics STM32CubeIDE (from V1.9.0)

2.3 Evaluation firmware

The STEVAL-PROTEUS1 main board comes with an evaluation firmware preloaded in the STM32WB5MMG microcontroller.

This firmware is a condition monitoring example based on Bluetooth® Low Energy connectivity.

The sensor node acts as BLE GATT server and can connect to a smartphone (based on Android or iOS) running the STBLESensClassic app that acts as a BLE GATT client.

The STBLESensClassic app is used for board and processing configuration, sensor data, preprocessed vibration data monitoring, and equipment status.

You can download the latest version of this evaluation source code and the associated documentation from www.st.com.

3 STEVAL-PROTEUS hardware architecture

The STEVAL-PROTEUS is the main board of the kit. The whole system consists of the following functional subsystems:

- Power management
- Microcontroller and secure element
- MEMS sensors
- NOR flash memory
- LEDs and push buttons
- Connectors

The sensors are connected to the microcontroller through SPI and I²C peripherals.

The STSAFE-A110 is connected via I²C whereas the QSPI is used for the NOR flash memory.

The external connectivity is allowed through:

- USB via USB connector
- UART via SWD connector
- UART, SPI, I²C, ADC, timer, SAI, and GPIOs routed on the 34-pin expansion connector (J9)

Figure 3. STEVAL-PROTEUS: functional block diagram

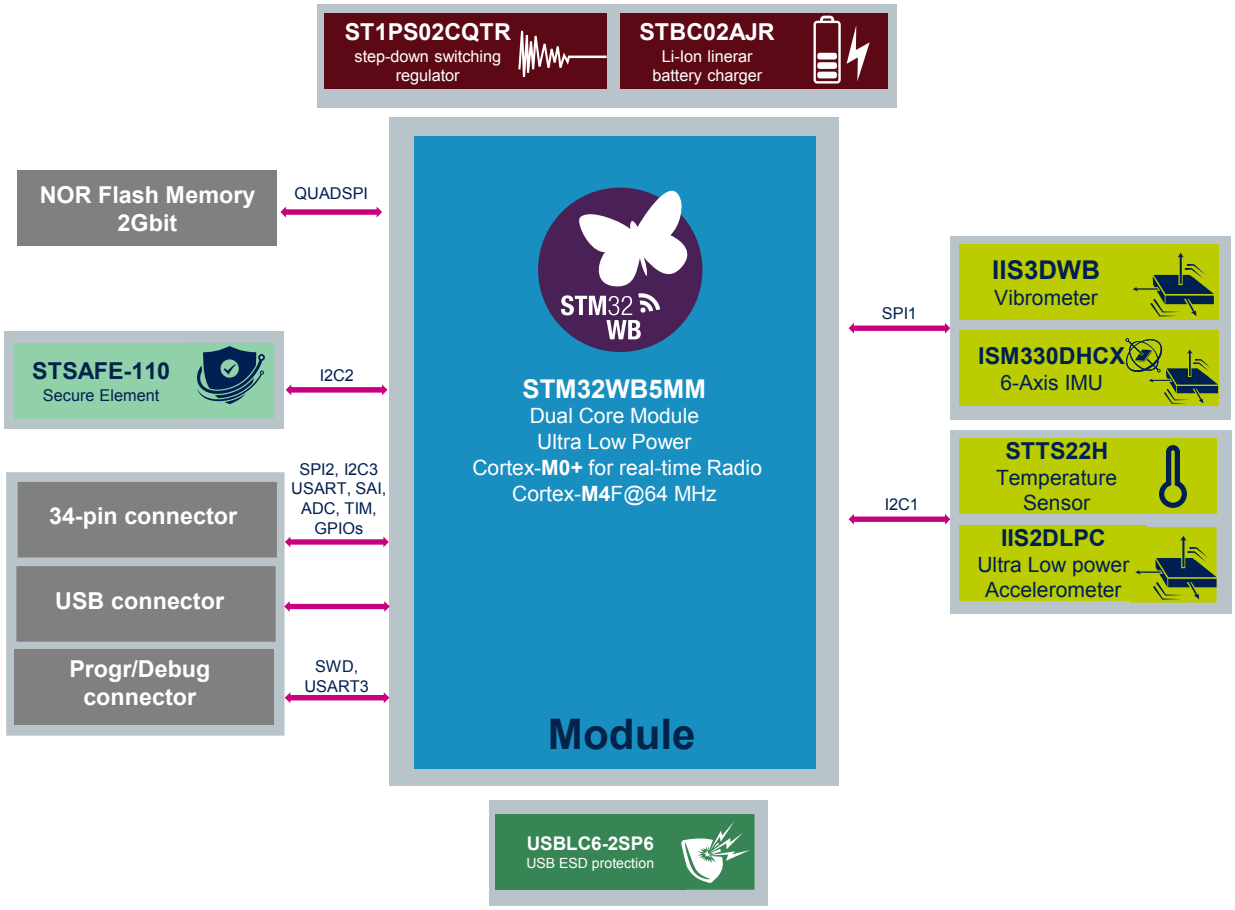

As shown in the figure below, the STEVAL-PROTEUS comes with the following components:

- U1 - STM32WB5MMG ultra-low-power and small form factor certified 2.4 GHz wireless module that embeds both Arm® Cortex®-M4 and Arm® Cortex®-M0+.
- U2 - STBC02
- U3 - ST1PS02

- U4 - STG4160
- U5 - IIS3DWB
- U6 - ISM330DHCX
- U7 - STTS22H
- U8 - IIS2DLPC
- U9 - STSAFE-A110
- U10 - STG3692
- Three push buttons (reset, power, and user)
- Three application LEDs
- One LED for the STBC02 status
- LiPo battery connector
- Primary battery connector
- STDC14 connector
- USB Micro-B receptacle
- High-current connector for board-to-FPC/board-to-board (0.4 mm pitch), 34-pin connector

Figure 4. STEVAL-PROTEUS components: top view

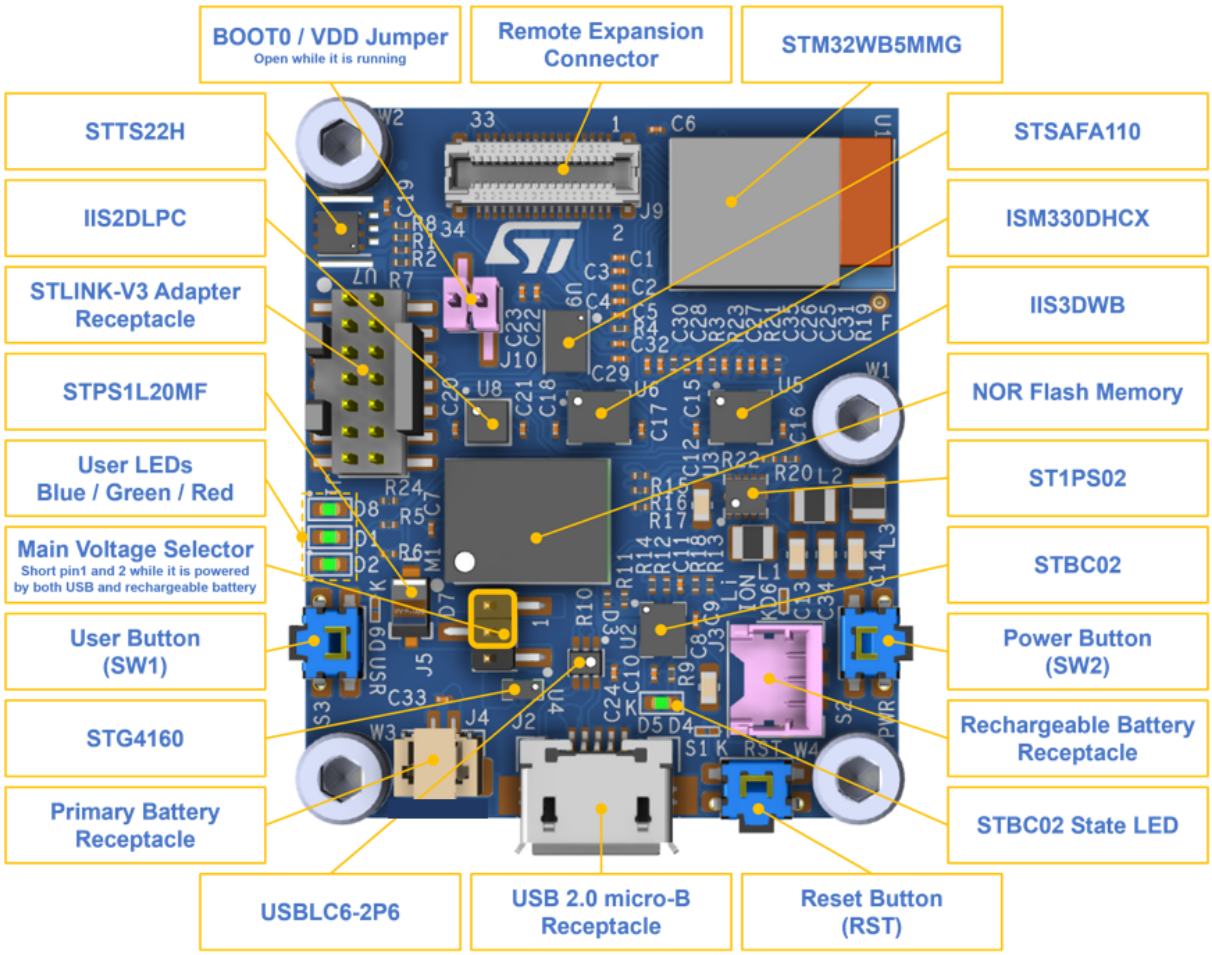

No component is placed on the STEVAL-PROTEUS bottom side to make the surface smooth, so that it can perfectly adhere to the equipment to monitor. This is a key feature of vibration monitoring.

Figure 5. STEVAL-PROTEUS bottom view

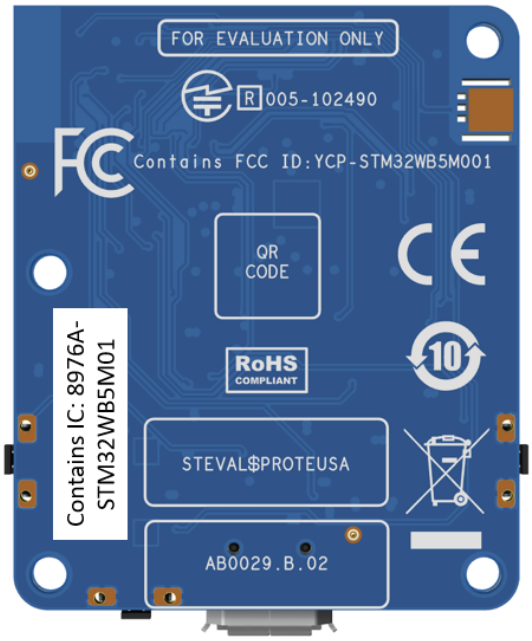

3.1 Power management

The STEVAL-PROTEUS power management block is based on the DC-DC step-down switching regulator (STP1S02) and on a linear battery charger (STBC02) to charge the LiPo battery and to switch automatically the power path between the LiPo battery and the USB source.

The DC-DC step-down converter has two different power paths: VOUT1 and VOUT2. The subsystem connected to the VOUT2 can be enabled or disabled by acting on the STP1S02 according to the application needs.

Figure 6. STEVAL-PROTEUS: power management system

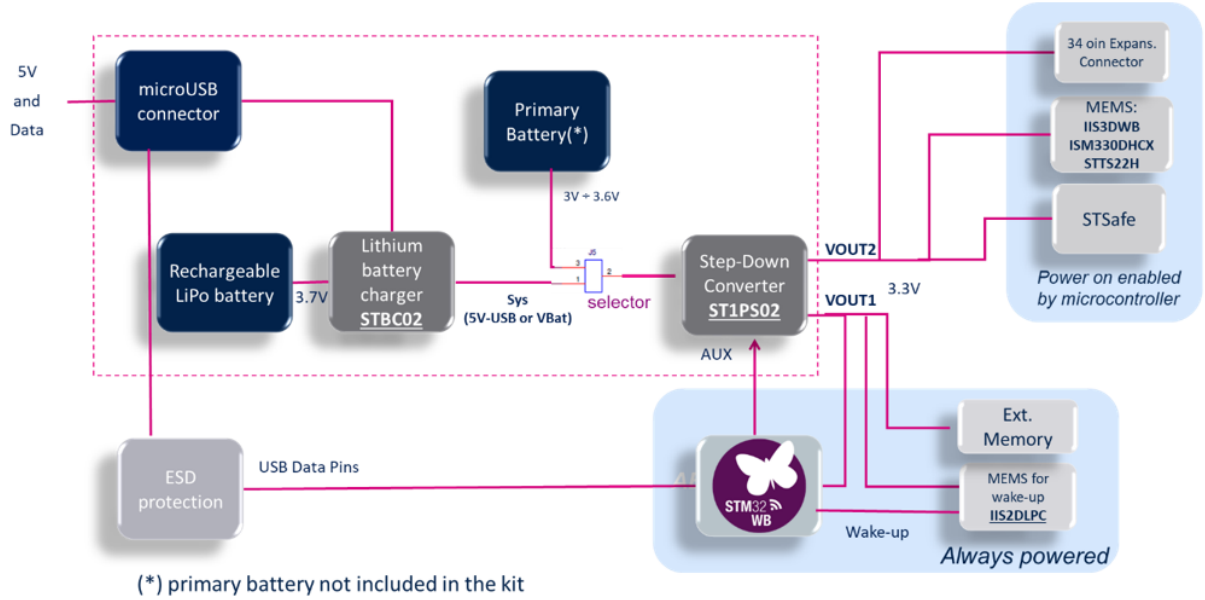

The main board can be powered via:

- the USB Micro-B plug connector (5 VDC/500 mA) through the J2 USB micro-B receptacle
- the LiPo rechargeable battery (3.7 VDC/480 mAh) through the J3 connector
- the primary battery (3 VDC ÷ 3.6 VDC), which is not included in the kit, through the J4 connector

The power section includes:

- U2 - STBC02 Li-Ion linear battery charger
- U3 - ST1PS02 400 mA step-down switching regulator
- D3 - USBLC6-2 low capacitance ESD protection for USB
- J2 - USB Micro-B receptacle
- J3 - LiPo battery connector
- J4 - primary battery connector
- J5 - main voltage selector
- S2 - power button
- D5 - STBC02 status LED

Table 1. Power supply setup

Supply source	Input connector	Configuration
LiPo battery	J3	J5 1-2 jumper fitted
USB	J2	J5 1-2 jumper fitted
Primary battery	J4	J5 2-3 jumper fitted

3.2 Microcontroller

The STEVAL-PROTEUS embeds an STM32WB5MMG, which is an ultra-low-power and small form factor certified 2.4 GHz wireless module. It supports Bluetooth® Low Energy 5.2, Zigbee® 3.0, OpenThread, dynamic and static concurrent modes, and 802.15.4 proprietary protocols.

Based on STMicroelectronics STM32WB55VGY wireless microcontroller that embeds both Arm® Cortex®-M4 and Arm® Cortex®-M0+, the STM32WB5MMG provides the best-in-class RF performance thanks to its good receiver sensitivity and a high output power signal. Its low-power features enable an extended battery lifetime, small coin-cell batteries, or energy harvesting.

The STM32WB5MMG requires no RF expertise and is the best way to speed up any development and to reduce the associated costs. The module is completely protocol stack royalty-free.

Figure 7. STM32WB55xx block diagram

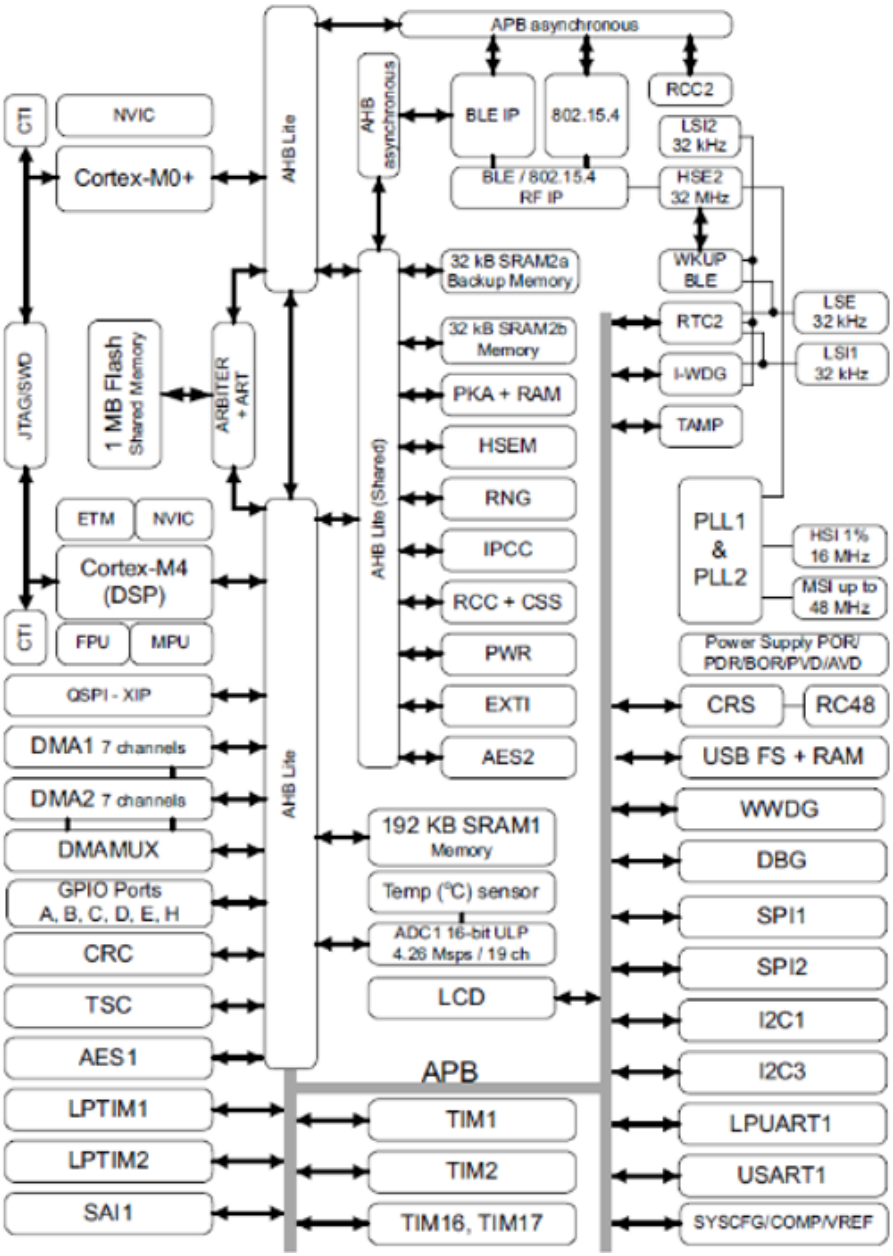

3.3 Secure element

The STEVAL-PROTEUS comes with an STSAFE-A110, which acts as a secure element that provides authentication and secure data management services to a local or remote host. It consists of a full turnkey solution with a secure operating system that runs on the latest generation of secure microcontrollers.

The STSAFE-A110 can be integrated in:

- IoT (Internet of things) devices
- smart-home, smart-city, and industrial applications
- consumer electronics devices, consumables, and accessories

3.4 MEMS

The STEVAL-PROTEUS embeds some MEMS sensors for vibration and temperature monitoring, preprocessing, and analysis. The sensor data are analyzed through the algorithms that run on the STM32WB5MMG microcontroller.

The board mounts the following sensors:

- IIS3DWB - ultra-wide bandwidth, low-noise, 3-axis digital vibration sensor (U5)
- ISM330DHCX - 3-axis accelerometer and 3-axis gyroscope with embedded machine learning core (U6)
- IIS2DLPC - high-performance, ultra-low-power 3-axis accelerometer (U8)
- STTS22H - low-voltage, ultra-low-power, temperature sensor (U7)

3.4.1 IIS3DWB

The IIS3DWB is a system-in package that features a 3-axis digital vibration sensor with low noise over an ultra-wide and flat frequency range.

The wide bandwidth, low noise, very stable, repeatable sensitivity, and the capability of operating over an extended temperature range (up to +105°C) make the device particularly suitable for vibration monitoring in industrial applications.

The high performance delivered at low power consumption, the digital output, and the embedded digital features, such as FIFO and the interrupts, enable features for battery-operated industrial wireless sensor nodes.

The IIS3DWB has a selectable full-scale acceleration range of ±2/±4/±8/±16 g and is capable of measuring accelerations with a bandwidth up to 6 kHz with an output data rate of 26.7 kHz.

The device integrates a 3 kB first-in, first-out (FIFO) buffer to avoid any data loss and to limit intervention of the host processor.

The ST MEMS sensor module family leverages the robust and mature manufacturing processes already used for the production of micromachined accelerometers and gyroscopes to serve automotive, industrial, and consumer markets. The sensing elements are manufactured using the ST proprietary micromachining process, whereas the embedded IC interfaces are developed using CMOS technology.

The IIS3DWB has a self-test capability, which allows checking whether the sensor is correctly working in the final application.

The IIS3DWB is available in a 14-lead plastic land grid array (LGA) package and is guaranteed to operate over an extended temperature range from -40°C to +105°C.

Table 2. IIS3DWB I/O configuration

I/O	Configuration
PI1	SPI2_CLK
PI3	SPI2_MOSI
PD3	SPI2_MISO
PF12	SPI_CS
PF15	INT1
-	INT2

3.4.2 ISM330DHCX

The ISM330DHCX is a system-in-package that features a high-performance 3D digital accelerometer and a 3D digital gyroscope tailored for Industry 4.0 applications.

The various sensing elements are manufactured using specialized micromachining processes, while the IC interfaces are developed using CMOS technology that allows the design of a dedicated circuit, which is trimmed to match the characteristics of the sensing element.

In the ISM330DHCX the sensing elements of the accelerometer and of the gyroscope are implemented on the same silicon die, guaranteeing superior stability and robustness.

The ISM330DHCX has a full-scale acceleration range of ±2/±4/±8/±16 g and a wide angular rate range of ±125/±250/±500/±1000/±2000/±4000 dps that enables its usage in a broad range of applications.

All the design aspects and the calibration of the ISM330DHCX have been optimized to reach superior accuracy, stability, extremely low noise, and full data synchronization. The embedded features (Machine Learning Core, programmable FSM, FIFO, sensor hub, event decoding, and interrupts) enable smart and complex sensor nodes, which deliver high performance at very low power.

The ISM330DHCX is available in a 14-lead plastic land grid array (LGA) package.

Table 3. ISM330DHCX I/O configuration

I/O	Configuration
PI1	SPI2_CLK
PI3	SPI2_MOSI
PD3	SPI2_MISO
PH15	SPI_CS
PB8	INT1
PF4	INT2

3.4.3 IIS2DLPC

The IIS2DLPC is a three-axis linear accelerometer with digital I²C/SPI output interface.

It has full scales of ±2g/±4g/±8g/±16g selectable by the user and can measure accelerations with output data rates from 1.6 Hz to 1600 Hz.

The IIS2DLPC has a high-performance mode and four low-power modes, which can be changed on-the-fly, providing outstanding versatility and adaptability to the requirements of the application.

The accelerometer has an integrated 32-level first-in, first-out (FIFO) buffer that allows the user to store data in order to limit intervention by the host processor. The embedded self-test capability allows checking whether the sensor is correctly working in the final application.

The IIS2DLPC has a dedicated internal engine to process motion and acceleration detection, including free-fall, wake-up, highly configurable single/double-tap recognition, activity/inactivity, stationary/motion detection, portrait/landscape detection, and 6D/4D orientation.

The IIS2DLPC is available in a small thin plastic land grid array package (LGA) and it is guaranteed to operate over an extended temperature range from -40°C to +85°C.

Table 4. IIS2DLPC I/O configuration

I/O	Configuration
PI1	SPI2_CLK
PI3	SPI2_MOSI
PD3	SPI2_MISO
PH6	SPI_CS
PF1	INT1
PF2	INT2

3.4.4 STTS22H

The STTS22H is an ultra-low-power, high accuracy, digital temperature sensor that offers a high performance over the entire operating temperature range.

The STTS22H band-gap temperature sensor is coupled with an A/D converter, signal processing logic, and an I²C/SMBus 3.0 interface, all in a single ASIC.

This sensor is housed in a small 2 x 2 x 0.50 mm 6-lead UDFN package with the exposed pad down for a better temperature match with the surrounding environment.

The STTS22H is factory calibrated and requires no additional calibration efforts on the customer side.

The STEVAL-PROTEUS1 embeds this high accuracy temperature sensor, which is placed in the board corner, far from the heat noise sources (power management and microcontroller) for a more precise temperature measurement.

The exposed pad sensor features maximize the thermal coupling between the evaluation board and the target equipment.

Figure 8. STEVAL-PROTEUS1: temperature sensor

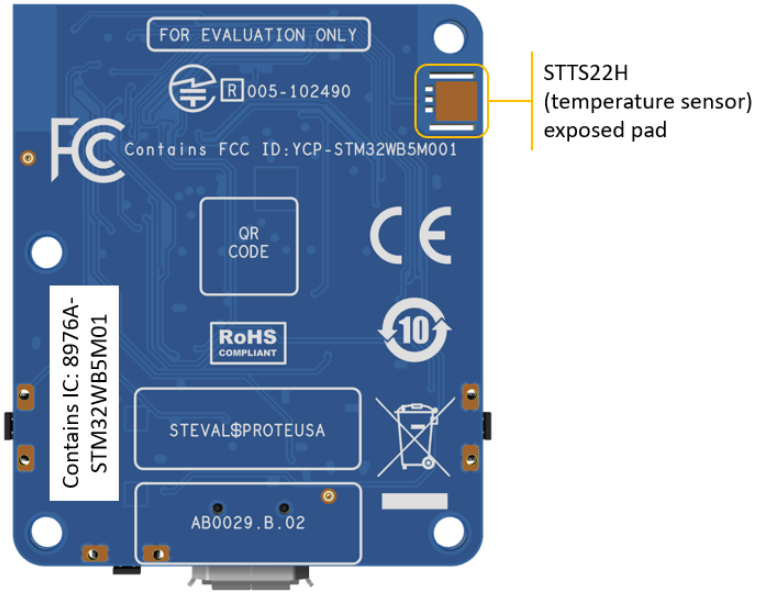

3.5 NOR flash memory

The STEVAL-PROTEUS comes with a 2Gb serial NOR flash memory, MX66L2G45GXRI00, able to store up to 256 MB.

The MX66L2G45G uses a Macronix proprietary memory cell, which reliably stores memory contents even after 100,000 program and erase cycles.

The communication between the MCU and the memory takes place via the QSPI bus.

Figure 9. MX66L2G45G block diagram

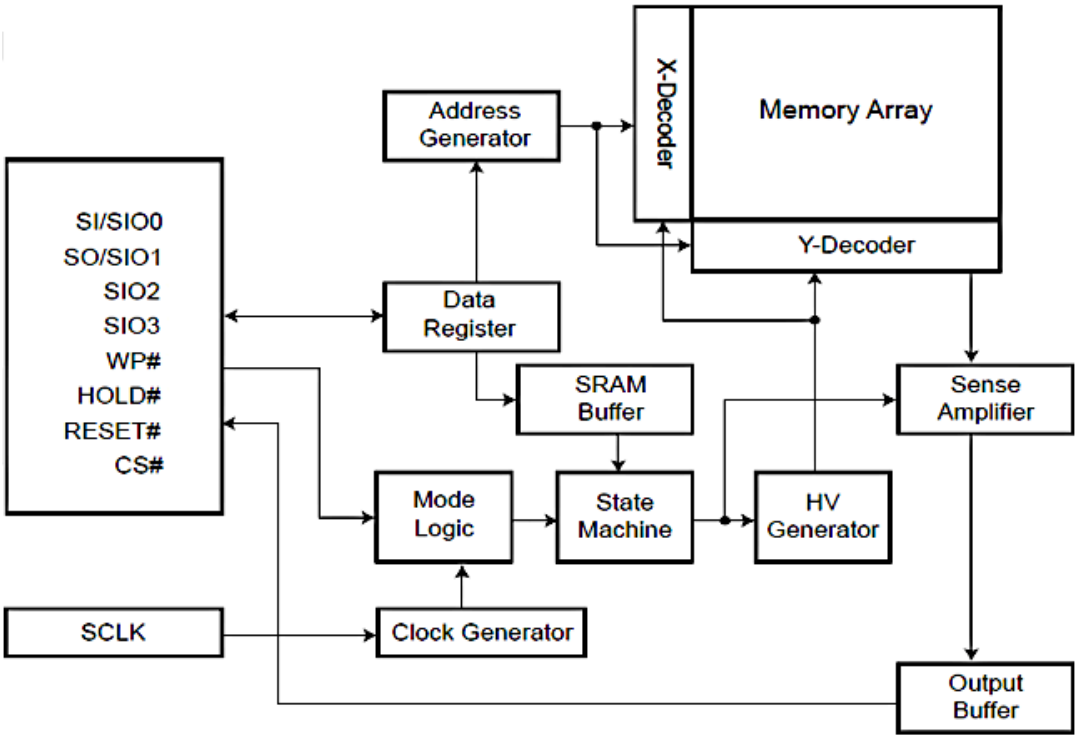

3.6 Connectors

3.6.1 SWD and UART connectors

The STEVAL-PROTEUS features an STDC14 connector to program the microcontroller via a dedicated flat cable connected to the STLINK-V3MINI.

Tx and Rx pins for the UART communication are also routed on this connector.

Figure 10. **STDC14 connector**

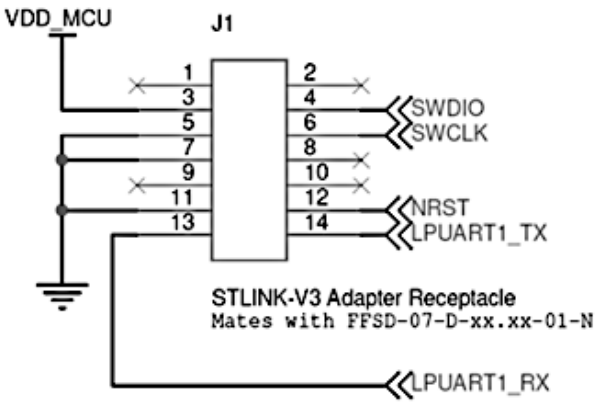

3.6.2 USB connector

The Micro-B USB connector (J2) can be used to power the board, recharge the battery when the battery is inserted, or for data transfer once connected to a PC.

3.6.3 Battery connectors

The STEVAL-PROTEUS provides two connectors to insert the battery:

- the J3 connector for the LiPo battery included in the kit
- the J4 connector for a primary battery, which is not included in the kit

Figure 11. LiPo battery connector

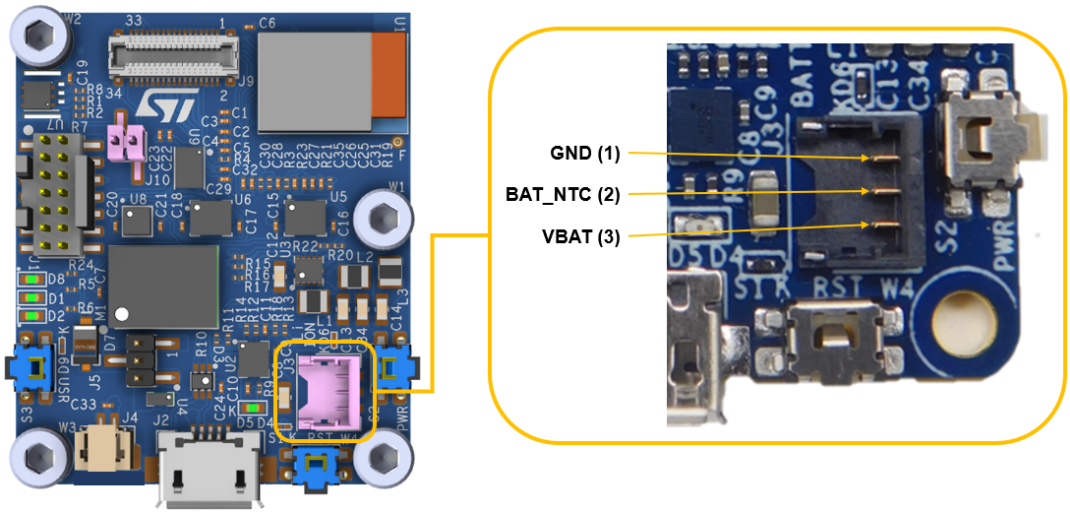

3.6.4 34-pin expansion connector

A high current connector for board-to-FPC/board-to-board (0.4 mm pitch) 34-pin connector is mounted on the STEVAL-PROTEUS to add a further sensor or a different connectivity.

The pinout of the 34-pin connector is compliant with the STMOD+ by using a dedicated adapter (not included in the kit).

Figure 12. Mapping of the 34-pin connector resources

MCU Pin and Functions	Connector Pin Number		MCU Pin and Functions
GND	34	33	GND
NC	32	31	WB V_MAIN
WB_PC2 SPI2_MISOs	30	29	WB ST1PS02 VOUT2
WB_PE2 SAI1_MCLK_A / TIM1_CH2N	28	27	WB_PA7 I2C3_SCL
WB_PC3 SAI1_SD_A / ADC1_IN4	26	25	WB_PD1 SPI2_SCK
WB_PB12 SAI1_FS_A / SPI2_NSSs	24	23	WB_PD3 SPI2_MISOp
WB_PB10 SAI1_SCK_A / SPI2_SCKs	22	21	WB_PD4 SPI2_MOSIp
NC	20	19	WB_PD0 SPI2_NSS
WB_PA9 SPDT_SEL_2	18	17	WB_PA8 SPDT SEL1
WB_PD15 TIM1_CH2	16	15	NC
WB_PA0 ADC1 IN5	14	13	WB_PB3 USART1_RTS
WB_PC13	12	11	WB_PA10 USART1_RX
WB_PB2 I2C3_SMBA	10	9	WB_PB6 USART1_TX
WB_PB14 I2C3_SDA	8	7	WB_PB4 USART1_CTS
WB ST1PS02 VOUT2	6	5	WB_PB15 SPI2_MOSIs
WB V_MAIN	4	3	NC
GND	2	1	GND

3.7 LEDs and push buttons

The STEVAL-PROTEUS mounts four LEDs:

- D1 - green LED for application
- D2 - red LED for application
- D8 - blue LED for application
- D5 - orange LED for battery charger status

The board also mounts three push buttons:

- S1 - MCU reset button
- S2 - power push button
- S3 - user push button

Figure 13. STEVAL-PROTEUS1: LEDs and push buttons

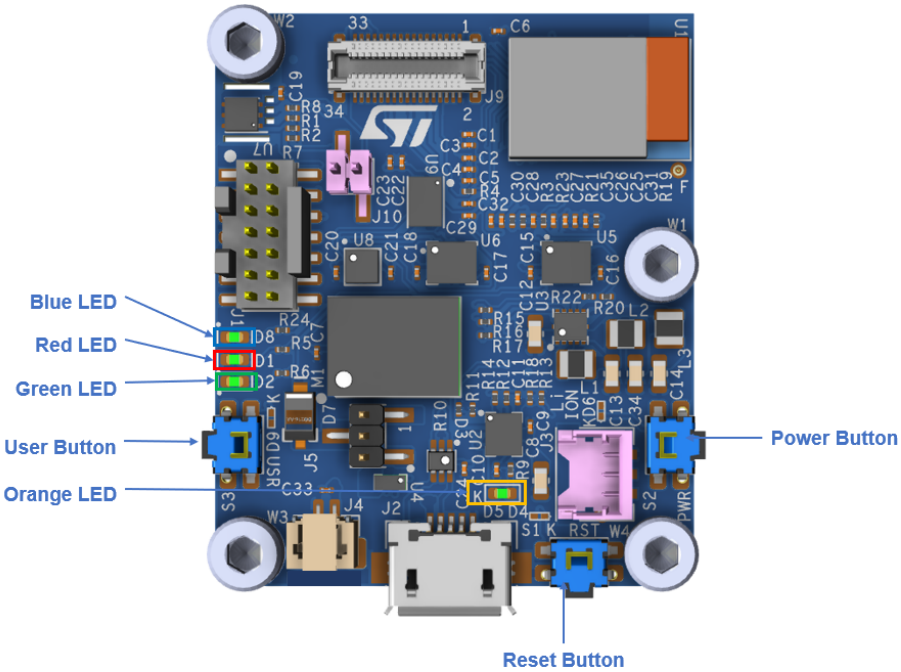

Note: When the STEVAL-PROTEUS is powered exclusively by the LiPo battery, the S2 push button is used to switch the system on (hardware event) and off (software event).

To switch the system on, push and hold the S2 button for at least three seconds: the orange LED turns on then off.

To switch the system off, push and hold the S2 button until the orange LED turns on. A command is sent to the battery charger to put it in shipping mode (low-power mode).

4 How to use the STEVAL-PROTEUS1

4.1 How to assemble the kit

The STEVAL-PROTEUS1 kit includes a plastic case with its related screws to host the board and the LiPo battery, allowing an easy fixing for demo purposes only.

To assemble the kit, follow the procedure below.

Step 1. Fix the main board to the case bottom (A) with the four screws included in the kit.
Pay attention to the board orientation.

Step 2. Put the LiPo battery in the top case (B) and insert the battery cable into the dedicated hole.

Figure 14. Kit assembly

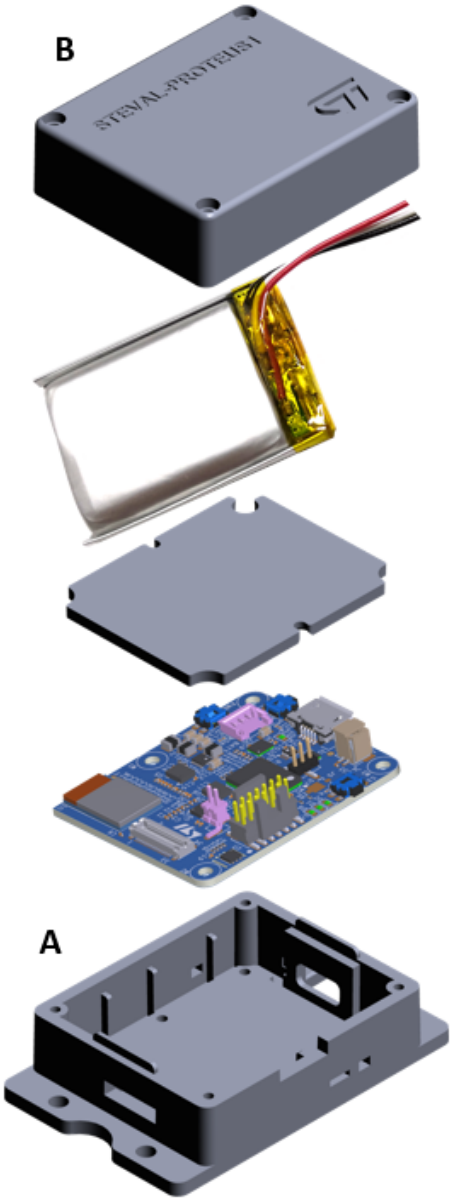

Step 3. Put the cover on the battery and close it using two screws.

Step 4. Plug the LiPo battery connector to the J3 connector.

Step 5. Close the A and B case parts using four screws.

Figure 15. Fixing the screws

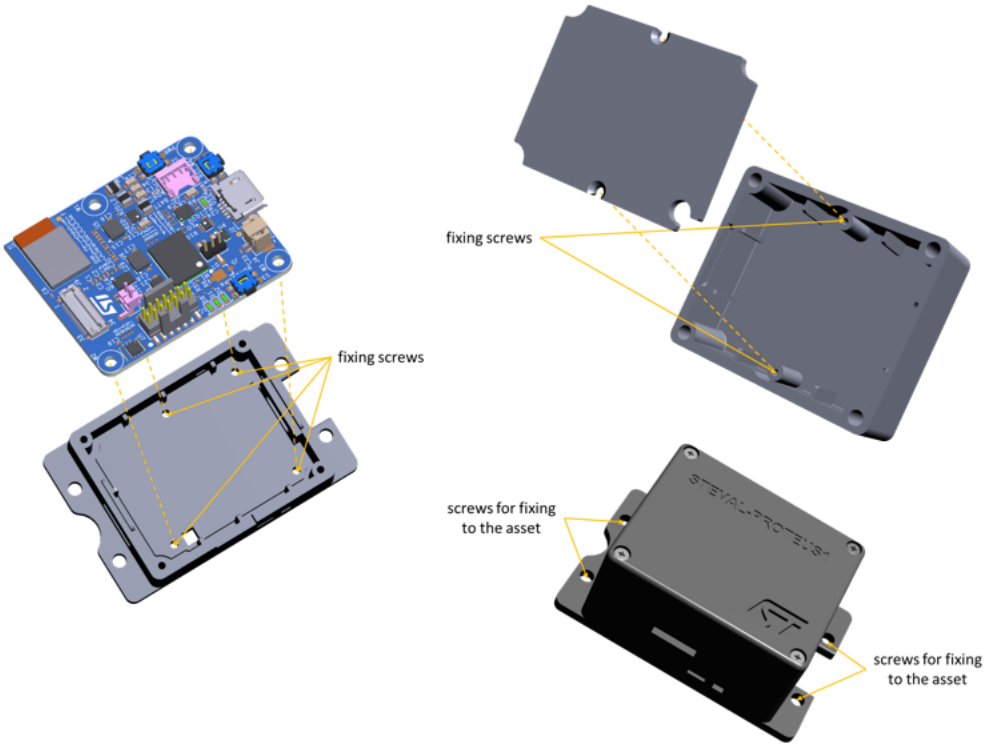

Step 6. Use something thin (for example, a needle) to access the holes and press the push buttons.

Figure 16. Push button pressers

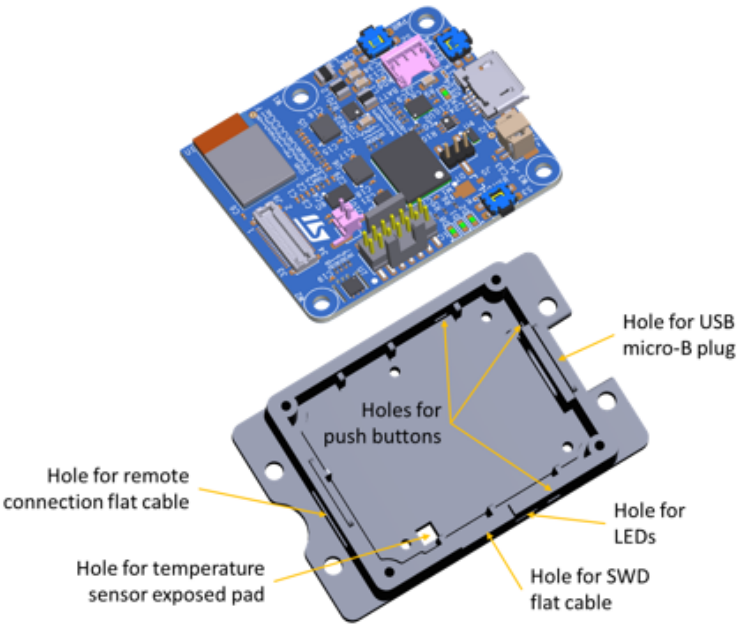

4.2 How to supply power to the STEVAL-PROTEUS board

It is recommended to power the board with the included LiPo battery (3.7 V, 480 mAh) or the USB. In any case, set the jumpers as follows:

- J10 open
- J5 short 1-2

There are different power supply options for the board:

- USB only

Figure 17. **5 V USB supply voltage**

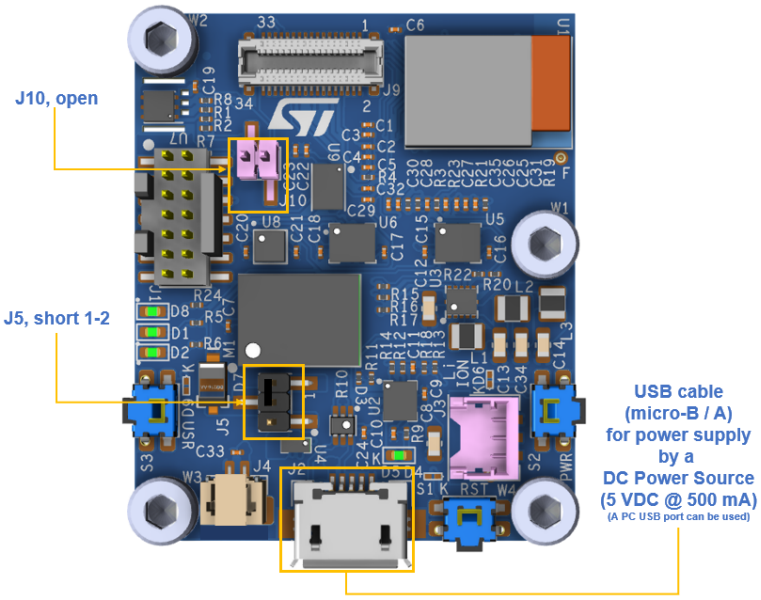

- LiPo battery only (press the PWR button (S2) for at least 2s to power up)

Figure 18. **LiPo battery supply**

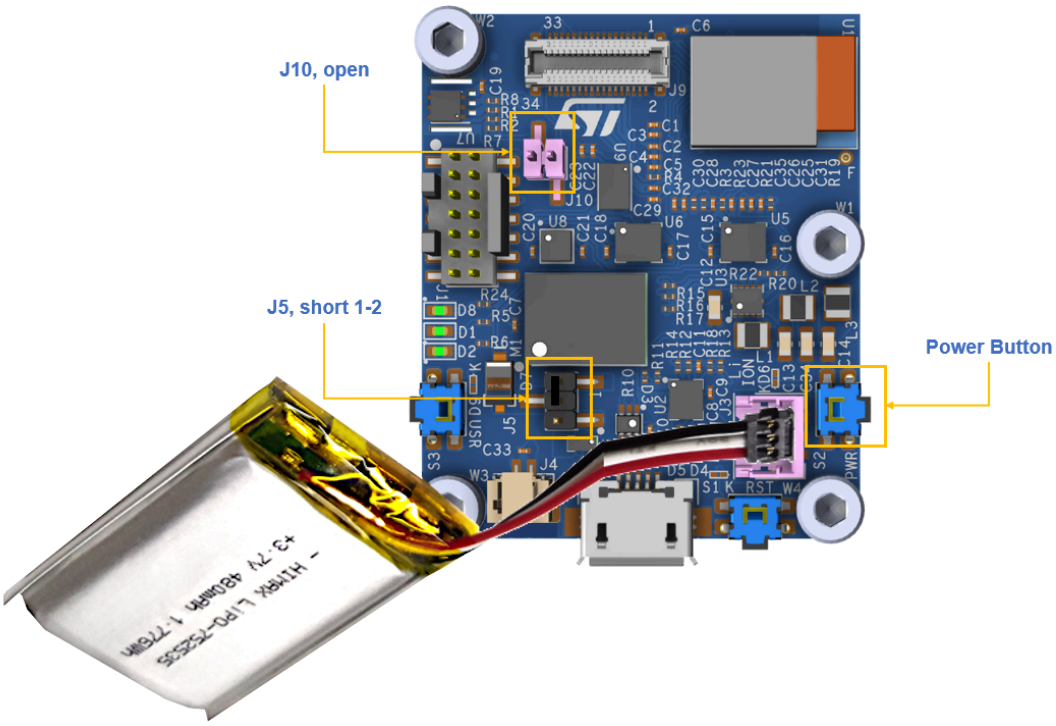

- USB and LiPo

Figure 19. Battery charging and USB supply voltage

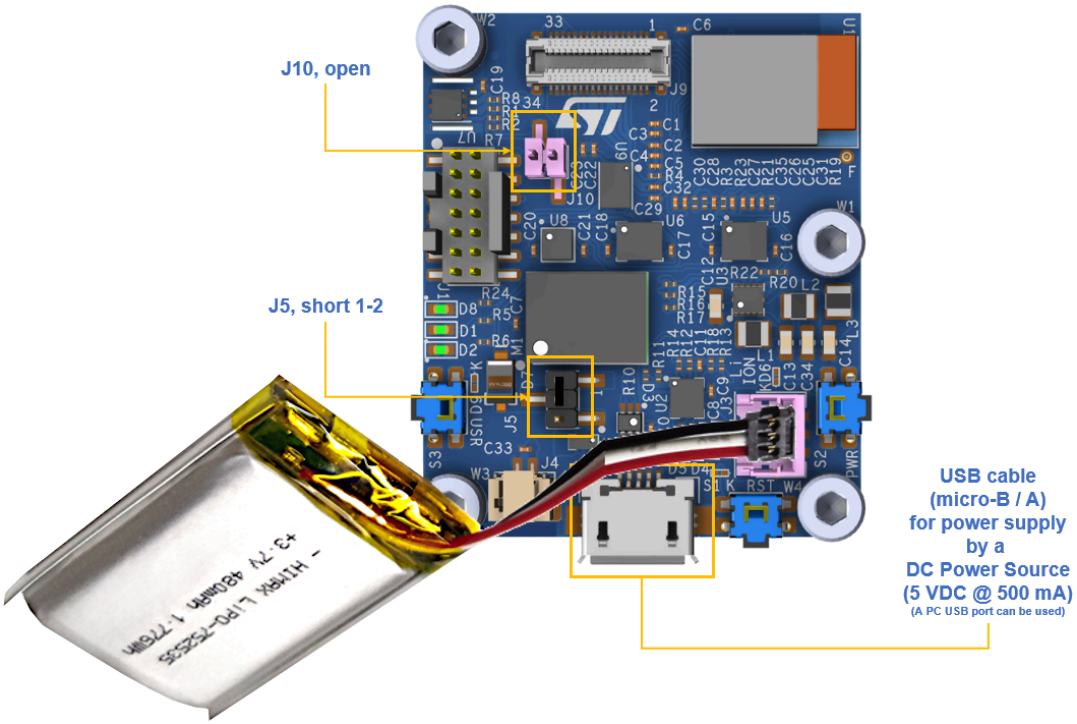

If the USB cable and the LiPo battery are plugged, the STBC02 charges only the battery.

A primary battery (3 V or 3.6 V), not included in the kit, can be used to power the STEVAL-PROTEUS. In this case, change the power path by placing a shunt on the 2-3 pins of J5 and connect the battery to J4 mates with 665002113322 (housing) and 665165128130 (precrimped wire).

When LiPo battery-powered, the equipment is intended to work properly with an operating temperature range of 10-35°C.

Without the battery, the equipment is intended to work properly with an operating temperature range of 10-45°C.

Caution: When using a primary battery, check that the operating temperature range is compatible with 10-45°C.

Pay attention to the configuration of J5 and J10 jumpers.

4.2.1 Power on-off procedure

If the system board is not powered via the LiPo battery, the board turns on and off when you connect and disconnect an external supply, respectively. Otherwise:

- for power-on, push and hold the S2 button for at least three seconds: the orange LED turns on then off;

Note: The power-on is managed by the STBC02 battery charger wake-up feature.

- for power-off, push and hold the S2 button until the orange LED turns on.

The STEVAL-PROTEUS embeds the STBC02 device with shipping mode features used to switch off the system. Thus, in the application code examples provided with the software, the microcontroller detects the push action and sends the shipping mode command to the STBC02 to force the device to shutdown mode (low-power mode).

Caution: Do not disconnect the LiPo battery from the board connector while the board is still powered to avoid putting the STBC02 in a protection mode. Normal operation can be restored by reconnecting the battery and supplying the USB input voltage.

4.3 How to program the STEVAL-PROTEUS

Step 1. Connect the STEVAL-PROTEUS board to an STLINK-V3MINI programmer using a 14-pin flat cable.

Note: The programmer and the cable are not included in the STEVAL-PROTEUS1 kit.

Step 2. Connect the board and the programmer to a PC/laptop using Micro-USB cables.

Figure 20. STEVAL-PROTEUS and STLINK-V3MINI connection

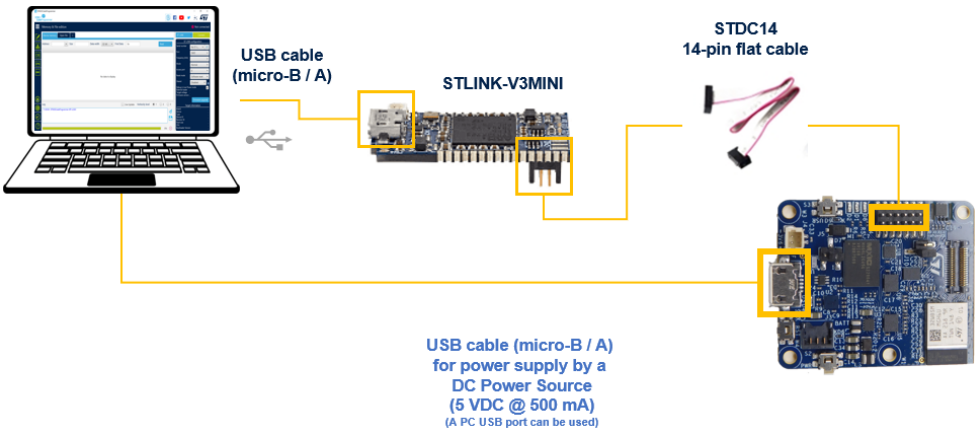

Step 3. Once the STEVAL-PROTEUS has been connected to a PC, launch your preferred IDE for programming and debugging or the STM32CubeProgrammer to update the firmware.

Step 4. If you choose the STM32CubeProgrammer, select [**ST-LINK**] on the right top corner of the screen and press connect.

Figure 21. STM32CubeProgrammer: connection

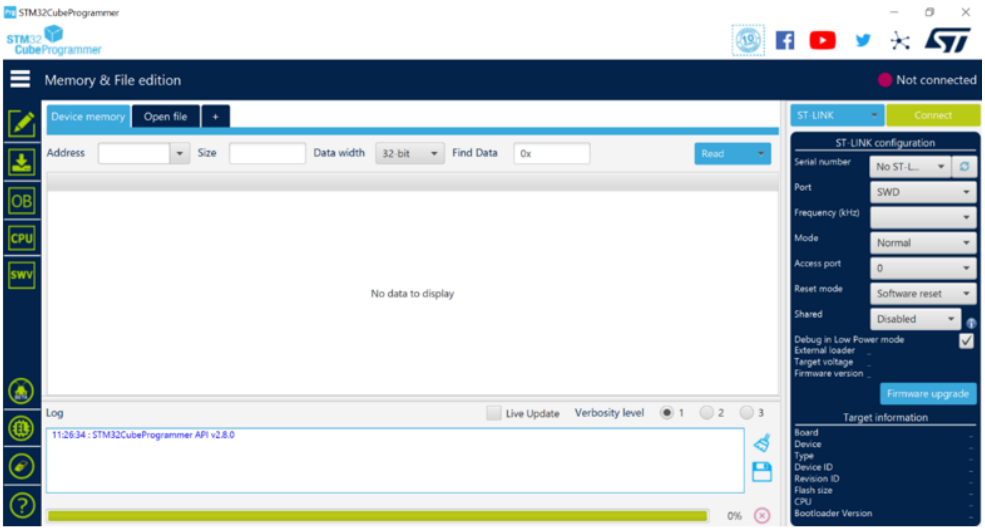

Step 5. Choose [**Open file**] and select the new .bin or .hex file to be flashed on the board.

Figure 22. STM32CubeProgrammer: file opening

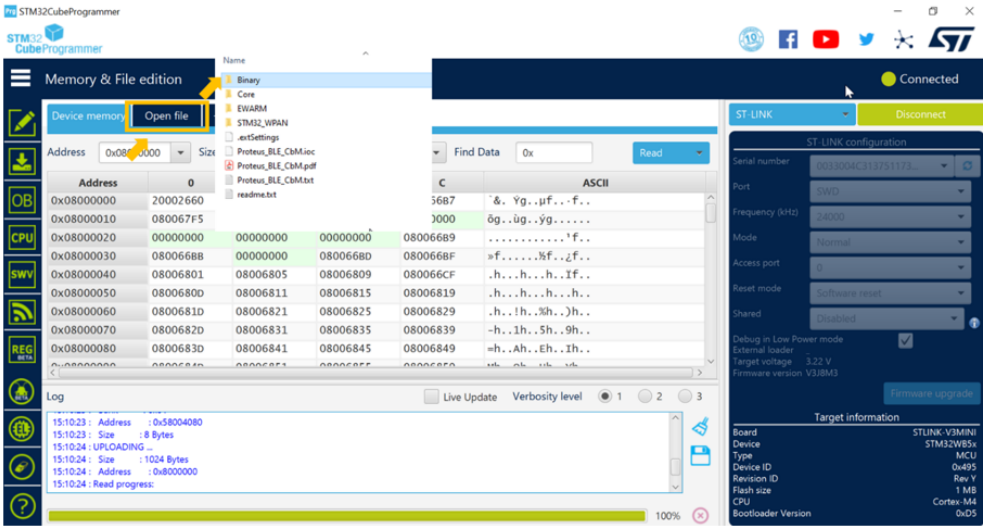

Step 6. Click on [**Download**] to flash the board.

Figure 23. STM32CubeProgrammer: board flashing

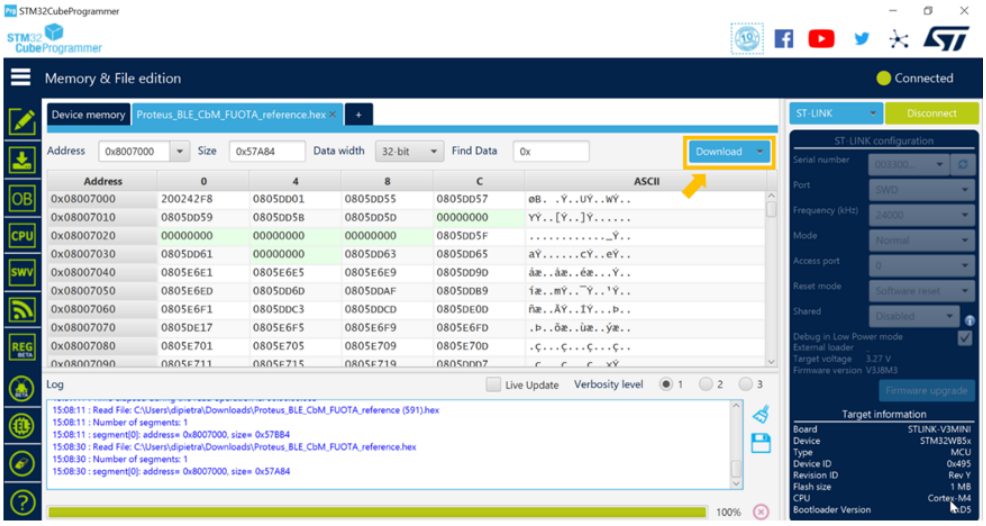

4.4 How to run the demonstration firmware

The STEVAL-PROTEUS1 kit includes a preloaded application example, which is compatible with the STBLESensClassic mobile application for Android and iOS.

To run the condition monitoring demonstration firmware, follow the procedure below.

Step 1. Check the position of the jumpers on the main board (J5 1-2 fitted, J10 open).

Step 2. Power up the system through the LiPo battery or the USB.

Step 3. Press the S2 power for three seconds.

Step 4. Install and launch the STBLESensClassic app on your smartphone and click on [**Connect to a device**].

Step 5. Look for the [**Proteus device**] on the app device list and push it to connect.

Step 6. Surf the mobile app pages to retrieve temperature sensor data, MEMS sensor plotting, and FFT plotting.

In the predictive maintenance tab, time and frequency domain vibration analysis can be visualized with the status coming from set thresholds. Fast firmware upgrade over-the-air is available in a dedicated tab.

5 Schematic diagrams

Figure 24. STEVAL-PROTEUS circuit schematic (1 of 5)

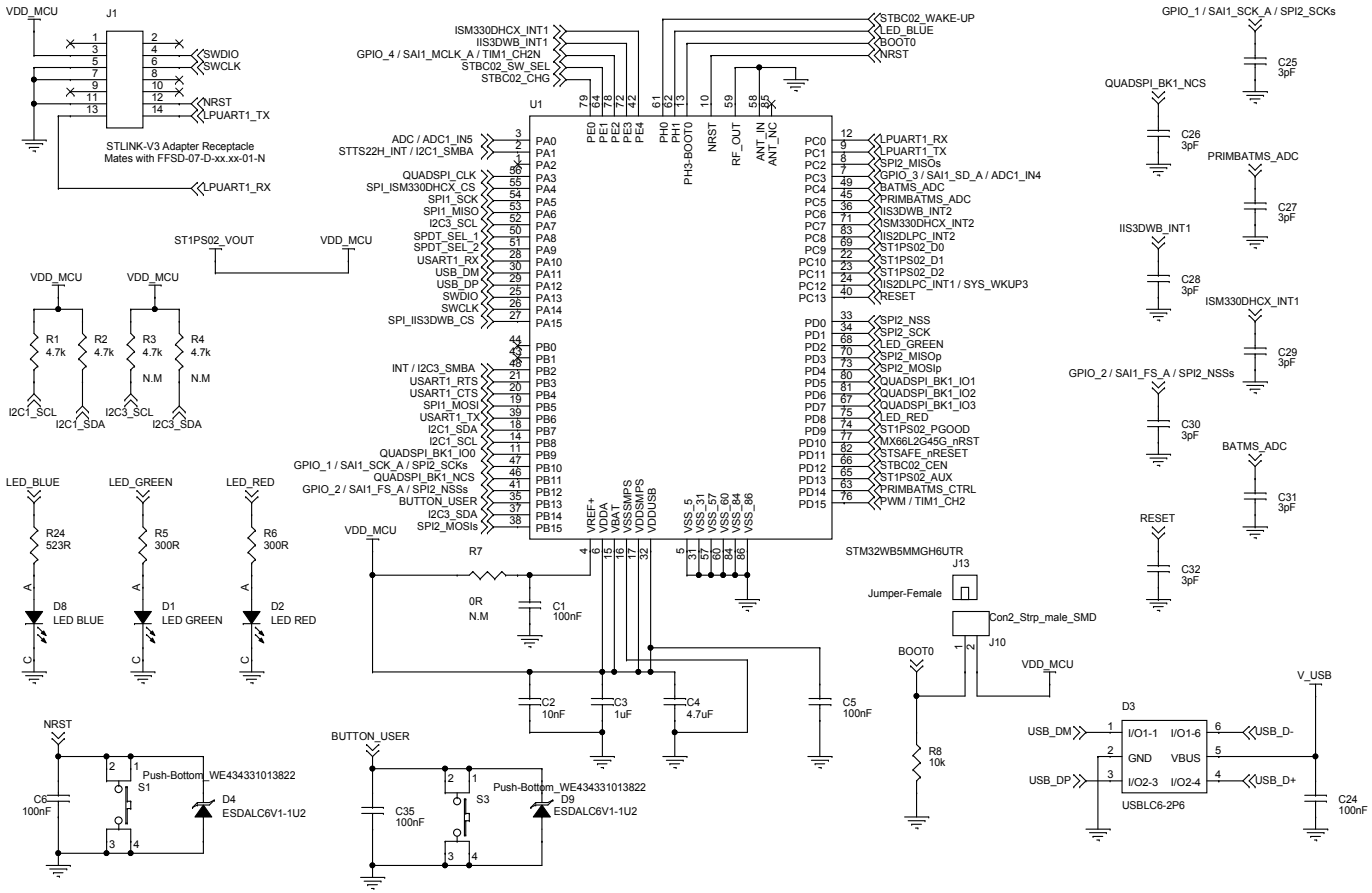

This kit features a specific STM32 device version, which allows the operation of any bundled commercial stack/library available.
This STM32 device shows a "U" marking option at the end of the standard part number and is not available for sales.
To use the same commercial stack in his/her application, a developer may need to purchase a part number specific to this stack/library.
The price of those part numbers includes the stack/library royalties.

Figure 25. STEVAL-PROTEUS circuit schematic (2 of 5)

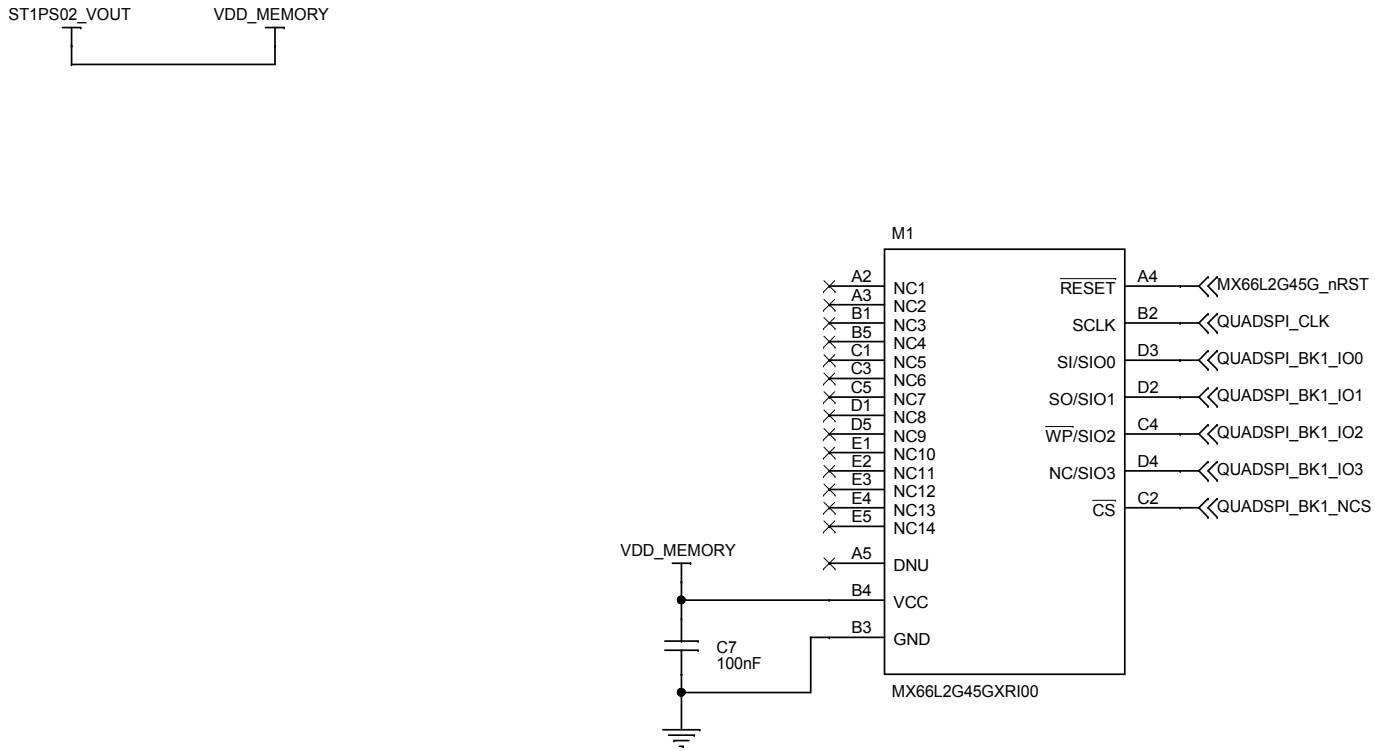

Figure 26. STEVAL-PROTEUS circuit schematic (3 of 5)

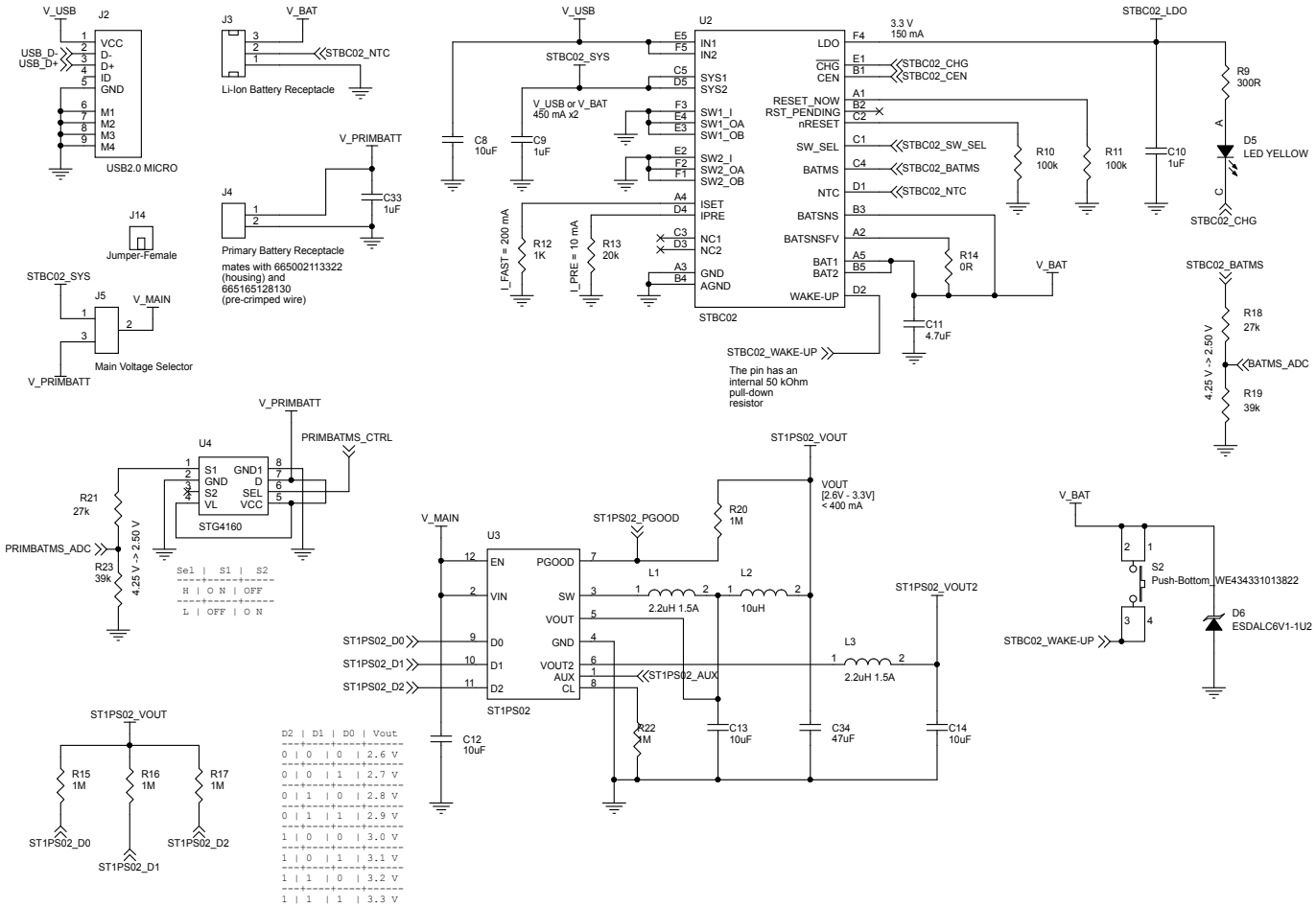

Figure 27. STEVAL-PROTEUS circuit schematic (4 of 5)

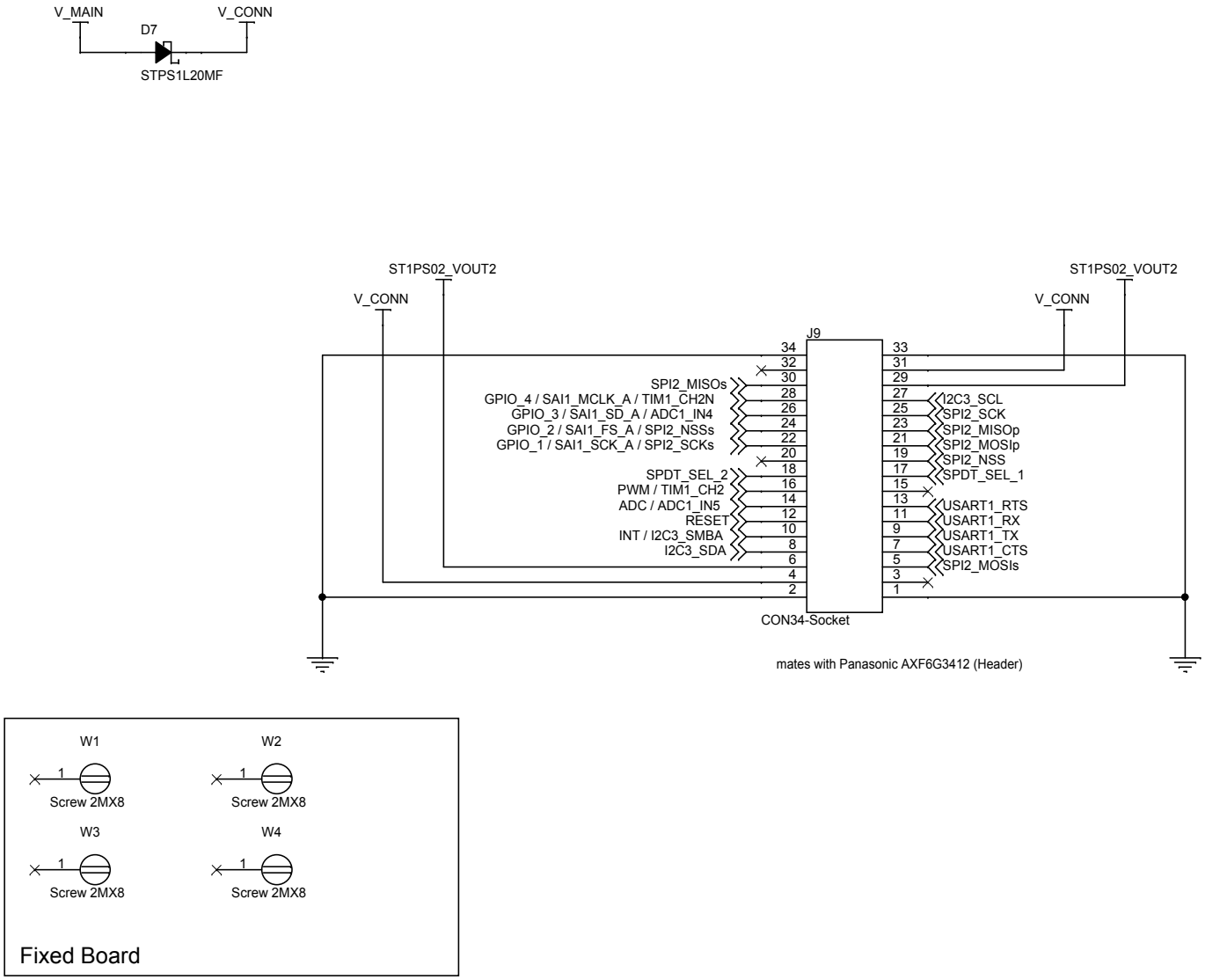

Figure 28. STEVAL-PROTEUS circuit schematic (5 of 5)

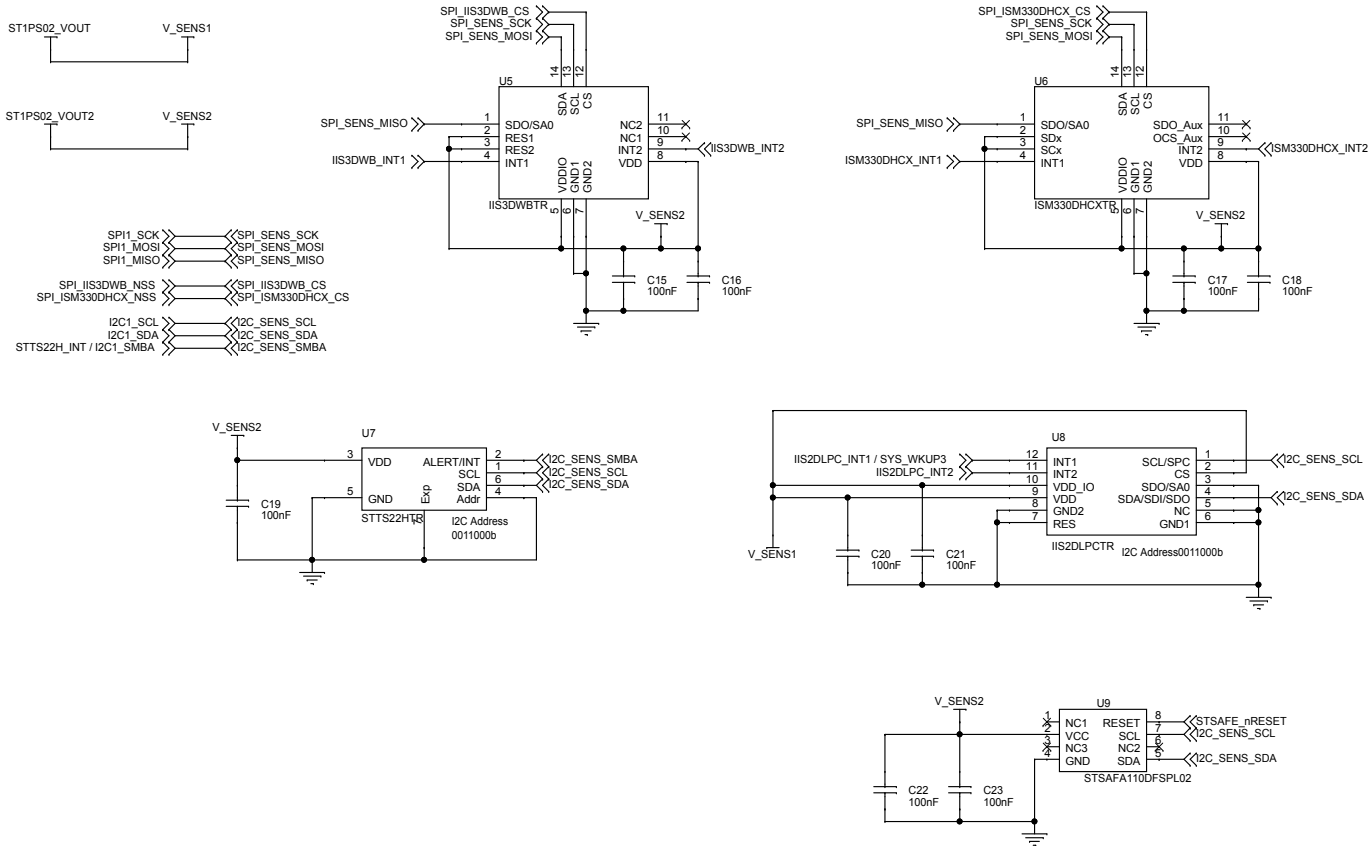

6 Bill of materials

Table 5. STEVAL-PROTEUS1 bill of materials

Item	Q.ty	Ref.	Part/value	Description	Manufacturer	Order code
1	15	C1 C5 C6 C7 C15 C16 C17 C18 C19 C20 C21 C22 C23 C24 C35	100nF, 0201, 10 V, 20 %	CAPACITOR CERAMIC SMD 0201 10V X5R 100 nF	Murata Electronics	GRM033R61A104ME15D
2	1	C2	10nF, 0201, 25 V, 20 %	CAPACITOR CERAMIC SMD 0201 25V X5R 10 nF	Murata Electronics	GRM033R61E103MA12D
3	4	C3 C9 C10 C33	1uF, 0201, 10 V, 20 %	CAPACITOR CERAMIC SMD 0201 10V X6S 1 uF	Murata Electronics	GRM033C81A105ME05D
4	2	C4 C11	4.7uF, 0201, 6.3 V, 20 %	CAPACITOR CERAMIC SMD 0201 6.3V X5R 4.7 uF	Murata Electronics	GRM035R60J475ME15D
5	4	C8 C12 C13 C14	10uF, 0603 (1608 Metric), 16 V, ±20 %	CAP CER 10uF 16V X6S 0603	Taiyo Yuden	EMK107BC6106MA-T
6	8	C25 C26 C27 C28 C29 C30 C31 C32	3pF, 0201, 25 V, 0.25pF %	CAPACITOR CERAMIC SMD 0201 25V COG 3pF	Murata Electronics	GRM0335C1E3R0CA01D
7	1	C34	47uF, 0603 (1608 Metric), 6.3 V, 20 %	CAP CER 47UF 6.3V X5R 0603	Taiyo Yuden	JMK107BBJ476MA-RE
8	1	D1	LED GREEN, 0402 (1005 Metric), 2 V, 20m A	Green 570nm LED Indication - Discrete 2V 0402	Würth Elektronik	150040VS73240
9	1	D2	LED RED, 0402 (1005 Metric), 2 V, 20m A	Red 625nm LED Indication - Discrete 2V 0402	Würth Elektronik	150040RS73240
10	1	D3	USBLC6-2P6, SOT-666	ESD protection for USB 2.0 high speed	ST	USBLC6-2P6
11	3	D4 D6 D9	ESDALC6V1-1U2, ST0201	Single-line low capacitance Transil for ESD protection	ST	ESDALC6V1-1U2
12	1	D5	LED YELLOW, 0402 (1005 Metric), 2 V, 20m A	Yellow 590nm LED Indication - Discrete 2V 0402	Würth Elektronik	150040YS73240
13	1	D7	STPS1L20MF, STmiteFLAT	20 V, 1A STmite flat low drop power Schottky rectifier	STMicroelectronics	STPS1L20MF
14	1	D8	LED BLUE, 0402 (1005 Metric), 3.2 V, 20m A	Blue 470nm LED Indication - Discrete 3.2V 0402	Würth Elektronik	150040BS73240

Item	Q.ty	Ref.	Part/value	Description	Manufacturer	Order code
15	1	J1	STLINK-V3 adapter receptacle	CONN HEADER SMD 14POS 1.27mm	Samtec Inc.	FTSH-107-01-L-DV-K[(1)]
16	1	J2	USB2.0 MICRO	CONN RCPT USB2.0 MICRO B SMD R/A	Würth Elektronik	629105136821
17	1	J3	Li-Ion Battery receptacle, 50 V, 1 A	Headers and Wire Housings 3P WTB VERT HDR PICO EZMATE	Molex	78171-0003
18	1	J4	Primary battery receptacle	CONN HEADER SMD 2POS 1mm	Würth Elektronik	665302124022
19	1	J5	Main voltage selector, 1A per pin A	CONN HEADER SMD 3POS 1.27mm	Sullins Connector Solutions	GRPB031VWTC-RC
20	1	J9	CON34-Socket	CONN SOCKET 34POS SMD GOLD	Panasonic Electric Works	AXF5G3412A
21	1	J10	Con2_Strp_male _SMD	CONN HEADER SMD 2POS 1.27mm	Harwin Inc.	M50-3630242R
22	2	J13 J14	Jumper-Female	CONN JUMPER SHORTING 1.27mm GOLD	Sullins Connector Solutions	NPB02SVAN-RC
23	2	L1 L3	2.2uH 1.5A, 0806 (2016 Metric), 20 %	FIXED IND 2.2UH 1.6A 135 MOHM	Würth Elektronik	74479276222C
24	1	L2	10uH, 0806 (2016 metric), 450 m A, 20 %	Fixed inductors 0806 10uH 520mOhms +/-20%Tol 450mA	Taiyo Yuden	BRC2016T100M
25	1	M1	MX66L2G45GX RI00, 24-TBGA, CSPBGA	IC FLASH SERIAL NOR 2GBIT	Macronix	MX66L2G45GXRI00
26	2	R1 R2	4.7k, 0201, 1/20 W, 1 %	RES SMD 1% 1/20W 0201 4.7K 1% 1/20W	Yageo	RC0201FR-074K7L
27	2	R3 R4 N.A.	4.7k, 0201, 1/20 W, 1 %	RES SMD 1% 1/20W 0201 4.7K 1% 1/20W (not assembled)	Yageo	RC0201FR-074K7L
28	3	R5 R6 R9	300R, 0201, 1/20 W, 1 %	RES SMD 1% 1/20W 0201 300R 1% 1/20W	Yageo	RC0201FR-07300RL
29	1	R7 N.A.	0R, 0201, 1/20 W, 1 %	RES SMD 1% 1/20W 0201 0R 1/20W (not assembled)	Stackpole Electronics	RMCF0201ZT0R00
30	1	R8	10k, 0201, 1/20 W, 1 %	RES SMD 1% 1/20W 0201 10K 1% 1/20W	Stackpole Electronics	RMCF0201FT10K0
31	2	R10 R11	100k, 0201, 1/20 W, 1 %	RES SMD 1% 1/20W 0201 100k 1/20W	Yageo	RC0201FR-07100KL

Item	Q.ty	Ref.	Part/value	Description	Manufacturer	Order code
32	1	R12	1K, 0201, 1/20 W, 1 %	RES SMD 1K OHM 1% 1/20W 0201	Yageo	RC0201FR-071KL
33	1	R13	20k, 0201, 1/20 W, 1 %	RES SMD 1% 1/20W 0201 20k 1/20W	Yageo	RC0201FR-0720KL
34	1	R14	0R, 0201, 1/20 W, 1 %,	RES SMD 1% 1/20W 0201 0R 1/20W	Stackpole Electronics	RMCF0201ZT0R00
35	5	R15 R16 R17 R20 R22	1M, 0201, 1/20 W, 1 %	RES SMD 1% 1/20W 0201 1M 1/20W	Yageo	RC0201FR-071ML
36	2	R18 R21	27k, 0201, 1/20 W, 1 %	RES SMD 1% 1/20W 0201 27k 1/20W	Vishay	CRCW060327K0FKEA
37	2	R19 R23	39k, 0201, 1/20 W, 1 %	RES SMD 1% 1/20W 0201 39k 1/20W	Vishay	CRCW080539K0FKEA
38	1	R24	523R, 0201, 1/20 W, 1 %	RES SMD 1% 1/20W 0201 523R 1% 1/20W	Yageo	RC0201FR-07523RL
39	3	S1 S2 S3	Push-Bottom, 3.50mm x 2.90mm	SWITCH TACTILE SPST-NO 0.05A 12V	Würth Elektronik	434331013822
40	1	U1	STM32WB5MMGH6UTR, SIP LGA 86 7.3x11 mm	STM32 MCU with Bluetooth® Low Energy 5.0 and 802.15.4	ST	STM32WB5MMGH6UTR(2)
41	1	U2	STBC02AJR, Chip Scale Package 0.4mm pitch	Li-Ion linear battery charger with LDO, load switches, and reset generator	ST	STBC02AJR
42	1	U3	ST1PS02CQTR, MLPQ/QFN 1.7x2.0x0.55 12L P0.4	400 mA nano-quiescent synchronous step-down converter with digital voltage selection, Power Good, and AUX switch	ST	ST1PS02CQTR
43	1	U4	STG4160BJR, Chip Scale Package 0.5mm pitch	Analog Switch ICs LV 0.5 Ohm SPDT 15kV 1.65 to 4.8V 0.2uA	ST	STG4160BJR
44	1	U5	IIS3DWBTR, VFLGA2.5X3X.86 14L P.5 L.475X.25	Ultra-wide bandwidth, low-noise, 3-axis digital vibration sensor	ST	IIS3DWBTR

Item	Q.ty	Ref.	Part/value	Description	Manufacturer	Order code
45	1	U6	ISM330DHCXTR, 14-VFLGA Module,	iNEMO inertial module with Machine Learning Core, Finite State Machine with digital output for industrial applications	ST	ISM330DHCXTR
46	1	U7	STTS22HTR, UDFN 2X2X.55 6L PITCH0.65	Low-voltage, ultra-low-power, 0.5°C accuracy I²C/SMBus 3.0 temperature sensor	ST	STTS22HTR
47	1	U8	IIS2DLPCTR, LGA2X2X0.7 12 LEADS	MEMS digital output motion sensor: high-performance ultra-low-power 3-axis accelerometer for industrial applications	ST	IIS2DLPCTR
48	1	U9	STSAFA110DFSPL02, UFDFPN 8 2x3x0.6	Authentication, state-of-the-art security for peripherals and IoT devices	ST	STSAFA110DFSPL02

1. *Some boards could mount the FTSH-107-01-L-DV instead of FTSH-107-01-L-DV-K. The only difference is in the keying shroud feature.*
2. *This kit features a specific STM32 device version, which allows the operation of any bundled commercial stack/library available. This STM32 device shows a "U" marking option at the end of the standard part number and is not available for sales. To use the same commercial stack in his/her application, a developer may need to purchase a part number specific to this stack/library. The price of those part numbers includes the stack/library royalties.*

7 Kit versions

Table 6. STEVAL-PROTEUS1 versions

PCB version	Schematic diagrams	Bill of materials
STEVAL$PROTEUS1A [1]	STEVAL$PROTEUS1A schematic diagrams	STEVAL$PROTEUS1A bill of materials

1. *This code identifies the STEVAL-PROTEUS1 evaluation kit first version.*

8 Regulatory compliance information

Formal Notice Required by the U.S. Federal Communications Commission

FCC NOTICE

Responsible party's contact located in the United States: name: Francesco Doddo; address: STMicroelectronics Inc, 30 Corporate Drive, Suite 300, Burlington MA, 01803, U.S.A.; e-mail: francesco.doddo@st.com

This device complies with part 15 of the FCC Rules. Operation is subject to the following two conditions: (1) This device may not cause harmful interference, and (2) this device must accept any interference received, including interference that may cause undesired operation. Changes or modifications not expressly approved by the manufacturer could void the user's authority to operate the equipment.

Note: This equipment has been tested and found to comply with the limits for a Class B digital device, pursuant to part 15 of the FCC Rules. These limits are designed to provide reasonable protection against harmful interference in a residential installation. This equipment generates, uses and can radiate radio frequency energy and, if not installed and used in accordance with the instructions, may cause harmful interference to radio communications. However, there is no guarantee that interference will not occur in a particular installation. If this equipment does cause harmful interference to radio or television reception, which can be determined by turning the equipment off and on, the user is encouraged to try to correct the interference by one or more of the following measures:

- Reorient or relocate the receiving antenna.
- Increase the separation between the equipment and receiver.
- Connect the equipment into an outlet on a circuit different from that to which the receiver is connected.
- Consult the dealer or an experienced radio/TV technician for help.

Standard applied: FCC CFR Part 15 Subpart B. Test method applied: ANSI C63.4 (2014).

Formal Product Notice Required by Industry Canada Innovation, Science and Economic Development

Canada compliance:

Responsible party's contact located in Canada: name: John Langner; address: STMicroelectronics, Inc., 350 Burnhamthorpe Road West, Suite 303 L5B 3J1, Mississauga, ON, Canada; e-mail: john.langner@st.com

Innovation, Science and Economic Development Canada Compliance

This device contains licence-exempt transmitter(s)/receiver(s) that comply with Innovation, Science and Economic Development Canada's licence exempt RSS(s). Operation is subject to the following two conditions: (1) This device may not cause interference. (2) This device must accept any interference, including interference that may cause undesired operation of the device.

Standard applied: ICES-003 Issue 7 (2020), Class B. Test method applied: ANSI C63.4 (2014).

Conformité à Innovation, Sciences et Développement Économique Canada

L'emetteur/recepteur exempt de licence contenu dans le present appareil est conforme aux CNR d'Innovation, Sciences et Developpement economique Canada applicables aux appareils radio exempts de licence. L'exploitation est autorisee aux deux conditions suivantes: (1) L'appareil ne doit pas produire de brouillage; (2) L'appareil doit accepter tout brouillage radioelectrique subi, meme si le brouillage est susceptible d'en compromettre le fonctionnement.

Norme appliquée: NMB-003, 7e édition (2020), Classe B. Méthode d'essai appliquée: ANSI C63.4 (2014).

Formal product notice required by EU

The kit STEVAL-PROTEUS1 is in conformity with the essential requirements of the Directive 2014/53/EU (RED) and of the Directive 2015/863/EU (RoHS). Harmonized standards applied are listed in the EU Declaration of Conformity.

Notice for Japan

当該機器には電波法に基づく、技術基準適合証明等を受けた特定無線設備を装着している。

(This equipment contains specified radio equipment that has been certified to the Technical Regulation Conformity Certification under the Radio Law.)

Construction design certification number: 005-102490 (dated June 26th, 2nd year of Reiwa)

R 005-102490

Model or name of specific radio equipment: 32WB5M
Radio type: F1D, G1D
Frequency bands:
F1D: 2402 to 2480 MHz (2 MHz bandwidth, 40 channels)
G1D: 2405-2480 MHz (5 MHz bandwidth, 16 channels)
RF power: 6 dBm
F1D: 0.0045 W
G1D: 0.0029 W/MHz
Antenna: ceramic chip antenna, peak gain 2.0 dBi typ.

Revision history

Table 7. **Document revision history**

Date	Revision	Changes
24-Jun-2022	1	Initial release.
20-Jun-2023	2	Updated STBLESensor with STBLESensClassic in all the document.

Contents

1 **Overview** 2
1.1 Precautions for use 2
1.2 Features 2
1.3 RF specifications 3
1.4 Package components 3
1.5 Ordering information 3
2 **Development environment** 4
2.1 System requirements 4
2.2 Development toolchains 4
2.3 Evaluation firmware 4
3 **STEVAL-PROTEUS hardware architecture** 5
3.1 Power management 8
3.2 Microcontroller 9
3.3 Secure element 10
3.4 MEMS 10
3.4.1 IIS3DWB 10
3.4.2 ISM330DHCX 11
3.4.3 IIS2DLPC 11
3.4.4 STTS22H 12
3.5 NOR flash memory 13
3.6 Connectors 13
3.6.1 SWD and UART connectors 13
3.6.2 USB connector 14
3.6.3 Battery connectors 15
3.6.4 34-pin expansion connector 15
3.7 LEDs and push buttons 16
4 **How to use the STEVAL-PROTEUS1** 17
4.1 How to assemble the kit 17
4.2 How to supply power to the STEVAL-PROTEUS board 19
4.2.1 Power on-off procedure 20
4.3 How to program the STEVAL-PROTEUS 21
4.4 How to run the demonstration firmware 23
5 **Schematic diagrams** 24
6 **Bill of materials** 29

7 Kit versions 33
8 Regulatory compliance information 34
Revision history 36
List of tables 39
List of figures. 40

List of tables

Table 1. Power supply setup . . . 8
Table 2. IIS3DWB I/O configuration . . . 10
Table 3. ISM330DHCX I/O configuration . . . 11
Table 4. IIS2DLPC I/O configuration . . . 11
Table 5. STEVAL-PROTEUS1 bill of materials . . . 29
Table 6. STEVAL-PROTEUS1 versions . . . 33
Table 7. Document revision history . . . 36

List of figures

Figure 1. Main board of the STEVAL-PROTEUS1 evaluation kit . . . 1
Figure 2. STEVAL-PROTEUS1 package components . . . 3
Figure 3. STEVAL-PROTEUS: functional block diagram . . . 5
Figure 4. STEVAL-PROTEUS components: top view. . . . 6
Figure 5. STEVAL-PROTEUS bottom view . . . 7
Figure 6. STEVAL-PROTEUS: power management system . . . 8
Figure 7. STM32WB55xx block diagram . . . 9
Figure 8. STEVAL-PROTEUS1: temperature sensor . . . 12
Figure 9. MX66L2G45G block diagram . . . 13
Figure 10. STDC14 connector . . . 14
Figure 11. LiPo battery connector. . . . 15
Figure 12. Mapping of the 34-pin connector resources . . . 15
Figure 13. STEVAL-PROTEUS1: LEDs and push buttons . . . 16
Figure 14. Kit assembly. . . . 17
Figure 15. Fixing the screws . . . 18
Figure 16. Push button pressers . . . 18
Figure 17. 5 V USB supply voltage . . . 19
Figure 18. LiPo battery supply . . . 19
Figure 19. Battery charging and USB supply voltage. . . . 20
Figure 20. STEVAL-PROTEUS and STLINK-V3MINI connection . . . 21
Figure 21. STM32CubeProgrammer: connection . . . 21
Figure 22. STM32CubeProgrammer: file opening . . . 22
Figure 23. STM32CubeProgrammer: board flashing . . . 22
Figure 24. STEVAL-PROTEUS circuit schematic (1 of 5). . . . 24
Figure 25. STEVAL-PROTEUS circuit schematic (2 of 5). . . . 25
Figure 26. STEVAL-PROTEUS circuit schematic (3 of 5). . . . 26
Figure 27. STEVAL-PROTEUS circuit schematic (4 of 5). . . . 27
Figure 28. STEVAL-PROTEUS circuit schematic (5 of 5). . . . 28

IMPORTANT NOTICE – READ CAREFULLY

STMicroelectronics NV and its subsidiaries (“ST”) reserve the right to make changes, corrections, enhancements, modifications, and improvements to ST products and/or to this document at any time without notice. Purchasers should obtain the latest relevant information on ST products before placing orders. ST products are sold pursuant to ST’s terms and conditions of sale in place at the time of order acknowledgment.

Purchasers are solely responsible for the choice, selection, and use of ST products and ST assumes no liability for application assistance or the design of purchasers’ products.

No license, express or implied, to any intellectual property right is granted by ST herein.

Resale of ST products with provisions different from the information set forth herein shall void any warranty granted by ST for such product.

ST and the ST logo are trademarks of ST. For additional information about ST trademarks, refer to www.st.com/trademarks. All other product or service names are the property of their respective owners.

Information in this document supersedes and replaces information previously supplied in any prior versions of this document.

© 2023 STMicroelectronics – All rights reserved