Compact 27 W USB Type-C™ Power Delivery 3.1 with PPS adapter reference design

Introduction

The STEVAL-USBPD27S is a 27 W AC-DC adapter reference design, USB Type-C Rev. 2.0 and Power Delivery Rev. 3.1 certified, supporting the Programmable Power Supply (PPS) feature. It has been optimized to maximize power density in a compact form factor (59x35x21mm).

The STEVAL-USBPD27S consists of two main sections:

- a power section, containing a single-ended flyback converter based on the STD7N65M6 N-channel 650V, 0.91Ω typ. MDmesh M6 Power MOSFET, and its control stage based on the STCH03 offline PWM controller for low standby adapters placed on a dedicated power control module
- a digital control section based on the STM32G071KB mainstream Arm Cortex-M0+ MCU with fully integrated USB Type-C Power Delivery controller.

The STEVAL-USBPD27S provides two fixed PDOs (5 V up to 5 A, 9 V up to 3 A) and two APDOs (5 V Prog up to 5 A, and 9 V Prog up to 3 A) through a wide input mains range.

The power stage ensures 20 mV and 50 mA resolution on the bus to perfectly cope with PPS feature. It also manages load feed-forward, OVP, UVP, OC and short-circuit protections.

The adapter is compliant with the European CoC ver. 5 Tier 2 and DOE Level VI energy saving standards.

It ensures ESD protection (IEC61000-4-2 level 4) on CC lines as well as immunity against surge current on the V_{BUS} pin up to 35 A in a 8/20 µs waveform, according to IEC61000-4-5.

The system has been tested to verify conducted noise emissions and compliance with the EN55022 (Class B) standard using average detectors, at half and full load with an input voltage of 115 and 230 V_{AC}.

Figure 1. STEVAL-USBPD27S reference board

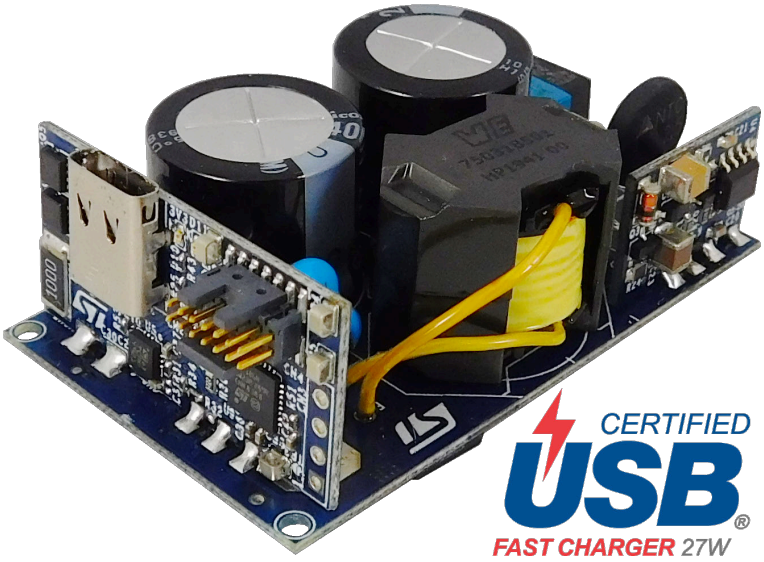

RELATED LINKS

For further details on adaptive synchronous rectification algorithm, refer to AN5499

For further details on ST VBUS control algorithm for PPS management, refer to AN5562: "VBUS control algorithm compliant with USB Type-C and Power Delivery specifications"

1 System architecture

The following figure shows the STEVAL-USBPD27S block scheme, highlighting all the interactions among the main stages.

Figure 2. STEVAL-USBPD27S system block scheme

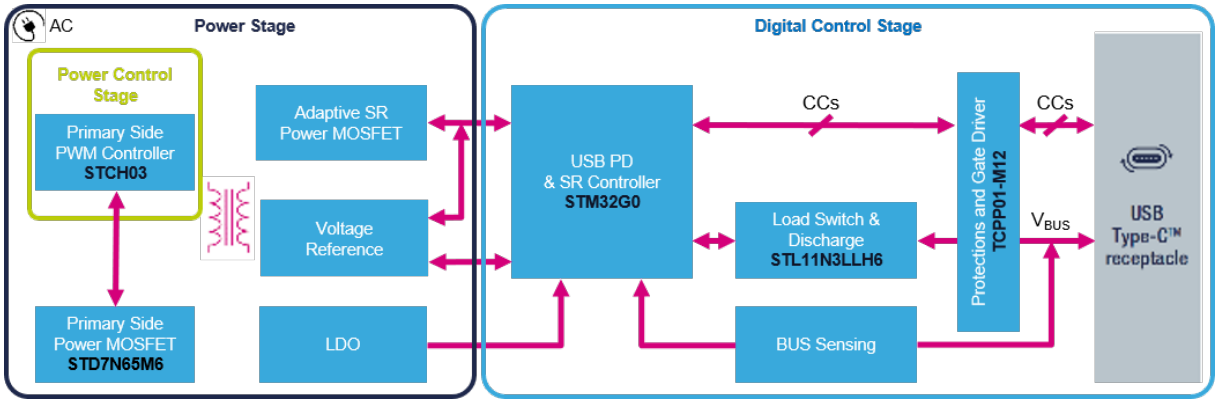

The global architecture is divided into two main sections, each representing the functional domain:

- a power section implementing a flyback converter topology based on STD7N65M6 Power MOSFET with the relative control stage embedding the STCH03 PWM controller
- a digital control section embedding:
  - a Type-C connector
  - the certified STM32G071KBU6N microcontroller (TID: 5444)
  - the ESD and USB Type-C port protection (TCPP01-M12) which controls the back-to-back load switch based on the STL11N3LLH6 STripFET™ H6 Power MOSFET
  - an auxiliary discharge mechanism based on STL11N3LLH6 STripFET™ VI DeepGATE™ MOSFET

Figure 3. STEVAL-USBPD27S main components (bottom view)

- Q2: STD7N65M6 N-channel MDmesh M6 Power MOSFET in DPAK package
- D3: BAS70JFILM RF ultra-fast switching signal Schottky diode
- D4: BAT41ZFILM 100 V, 200 mA general purpose signal Schottky diode
- U1: TS3431CILT 1.24 V adjustable shunt voltage reference
- U2: BAR43SFILM general purpose signal Schottky diode
- U3: LDK320AM33R low quiescent current and high PSRR voltage regulator
- D13: SMA4F170A 400 W TVS Transil in SMA flat package

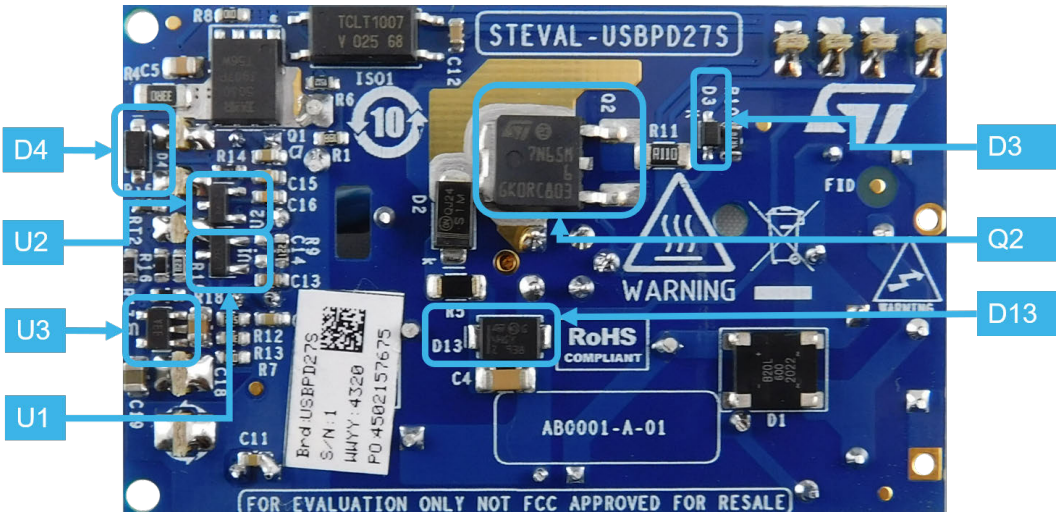

Figure 4. STEVAL-USBPD27S main components (top view)

T1: Wurth Elektronik RM8 transformer (750318501)

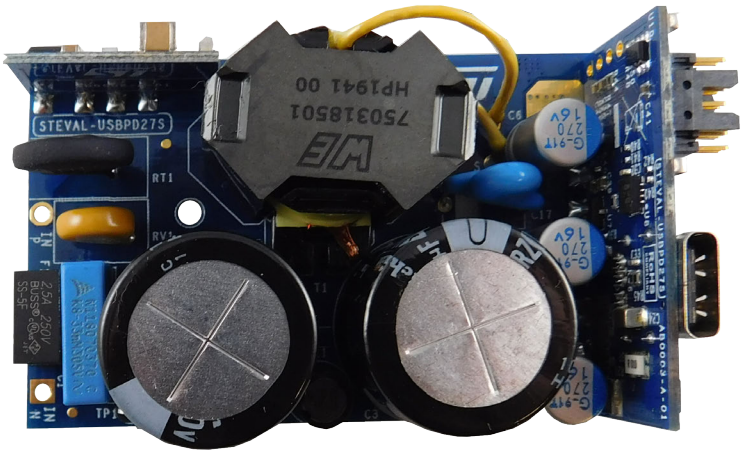

Figure 5. STEVAL-USBPD27S power control board (side view)

- D5, D6: BAS70JFILM RF and ultra-fast switching signal Schottky diode
- U4: STCH03TR offline PWM controller for low standby adapters

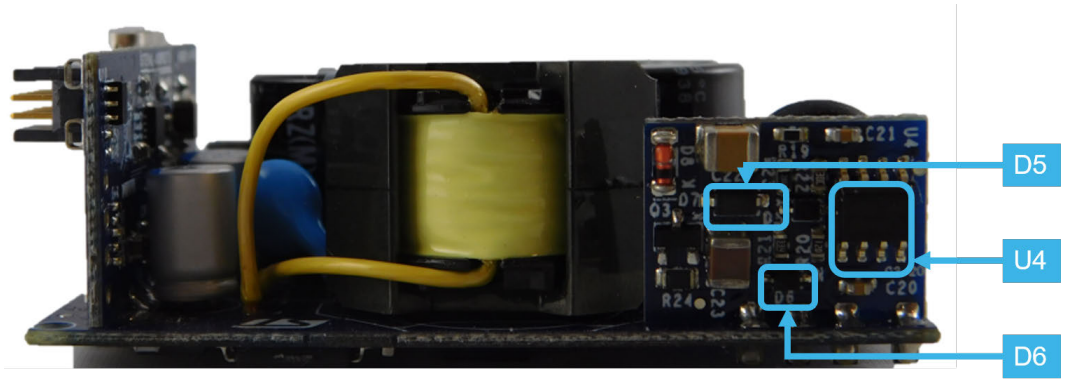

Figure 6. STEVAL-USBPD27S digital control board

- D9: ESDA15P60-1U1M high-power transient voltage suppressor (TVS)
- D12: BAT30F4 30V, 300mA CSP general purpose small signal Schottky diode
- Q4, Q5: STL11N3LLH6 11 A N-channel STripFET H6 Power MOSFET
- Q6, Q7, Q8: STL6N3LLH6 6 A N-channel STripFET H6 Power MOSFET
- Q9: STL4P3LLH6 P-channel STripFET H6 Power MOSFET
- U5: TCPP01-M12 USB Type-C port protection
- U6: STG3684AUTR low voltage dual SPDT switch with break-before-make feature
- U7: 30 V, 100 mA Vf 0.33V@2mA SMD general purpose signal Schottky diode
- U9: STM32G071KBU6N Mainstream Arm Cortex-M0+ MCU, USB-C and PD compliant

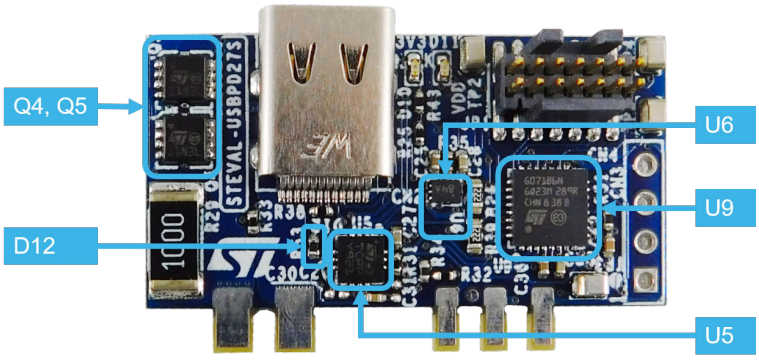

In collaboration with Wurth Elektronik, two flyback transformers have been designed and are currently available as off-the-shelf parts.

The on-board transformer (T1 by Wurth Elektronik , part number 750318501) is based on high power density RM8 core and ensures reinforced insulation for wide range universal offline applications. It offers placement and connection flexibility through flying leads that helps to obtain a very compact design.

Another transformer version with extended rail (Wurth Elektronik 750318330, www.we-online.com) is available for applications where customers prefer having a drop-in component with similar characteristics and performance.

1.1 Power section

The main PCB hosts the power section which includes two daughter boards, one for primary side control and one for digital control.

The implemented quasi-resonant flyback power switching converter is intended to convert the rectified input voltage into a regulated DC output voltage. The primary side implements the single-ended topology and the secondary side hosts the feedback network for the primary side controller, the synchronous rectification Power MOSFET, the output voltage regulation circuitry and the auxiliary voltage block to supply the other parts.

Table 1. STEVAL-USBPD27S overall power electrical features

Specification	Value	Description
V_{IN}	90 – 264 V_{AC}	Input voltage range
Frequency	45 – 65 Hz	Input frequency range
Power	27 W	Nominal output power
V_{OUT}	3.3 - 11 V	Output voltage range
Available profiles	5 V/5 A; 9 V/3 A 5 V Progr up to 5 A 9 V Prog up to 3 A	PD profiles
Topology	QR isolated flyback	Quasi-resonant (QR) operation with primary side constant current (CC) output regulation
Full load efficiency	89.5%	Maximum efficiency at 230 V_{AC} input
Switching frequency	Variable	31 - 175 kHz

1.1.1 Power stage primary side

The following figures show the primary stage including the AC-DC section and the power control daughter board.

Figure 7. AC-DC stage

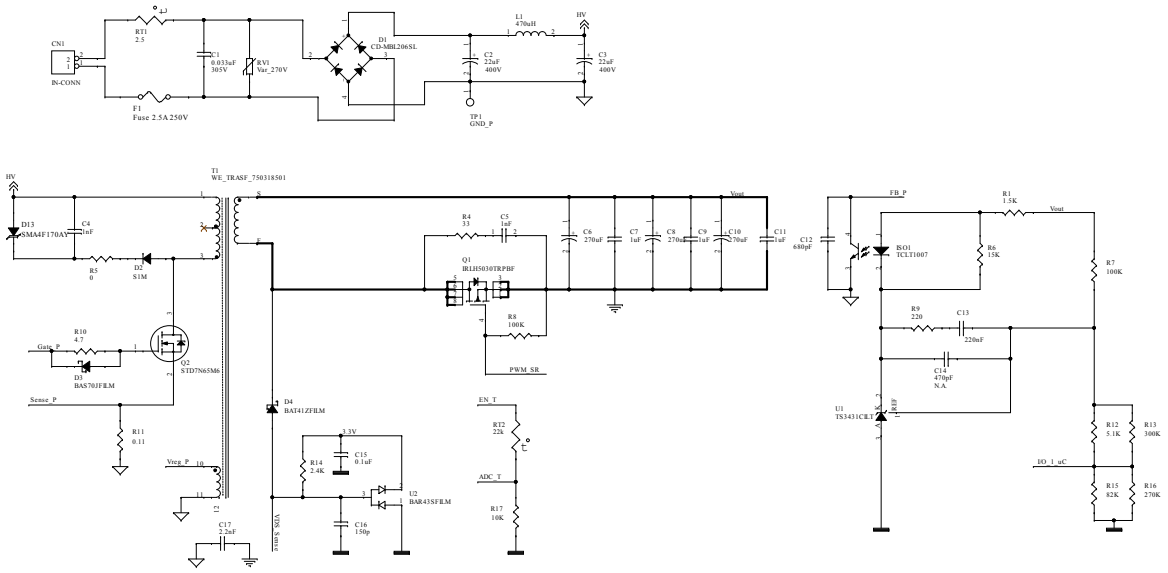

Figure 8. Power control daughter board

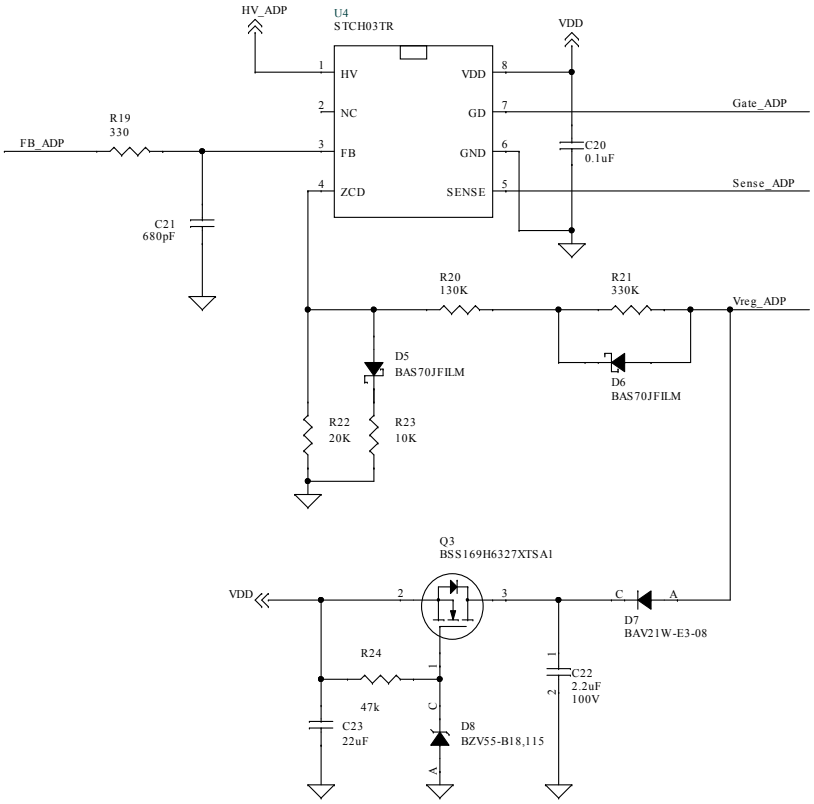

The AC input voltage (to be connected to the PCB CN1 pads) can vary from 90 to 264 V_{AC}, while its frequency can vary from 45 to 65 Hz. The converter input stage is equipped with a 2.5 A/250 V fuse (F1) and a 2.5 Ω NTC (RT1) to limit the inrush current at start-up and a 275 V varistor (RV1) to protect against excessive transient voltages.

The input voltage is filtered by a differential mode capacitor (C1) and then rectified through the 2 A, 600 V integrated diode bridge (D1). A balanced PI filter with two 22 µF electrolytic capacitors (C2 and C3) and a 470 µH inductor (L1) improve EMI performance.

On the primary side of the quasi-resonant flyback converter, the STD7N65M6 Power MOSFET (Q2) acts as power switch connected to the transformer (T1) and driven by the STCH03 controller (U4).

The quasi-resonant flyback topology operation mode allows reaching very good performance in terms of mains consumption at light load. Moreover, this topology maintains a low level of the EMI, thanks to the main Power MOSFET zero voltage switching (ZVS).

The STCH03 is a current-mode controller specifically designed for offline quasi-resonant ZVS flyback converters and represents the primary side core, achieving very low power consumption during no-load operation.

After start-up, it allows the converter to operate in three different modes according to the output load level:

- QR mode at heavy load
- Valley-skipping mode at medium/light load
- Burst mode at very light or with disconnected load

The STD7N65M6 device belongs to the MDmesh™ M6 high voltage MOSFET family which combines excellent $R_{DS(on)}$ per area improvement with one of the most effective switching behaviors.

To clamp the overvoltage caused by the transformer leakage inductance at turn-off, and keep it within a safe value, the Power MOSFET is protected by a TSV-CD snubber circuitry (D2, C4, D13).

The transformer specifically designed and developed by Wurth Elektronik for this solution uses an RM8 core with the specifications shown below.

Figure 9. RM8 core transformer specifications

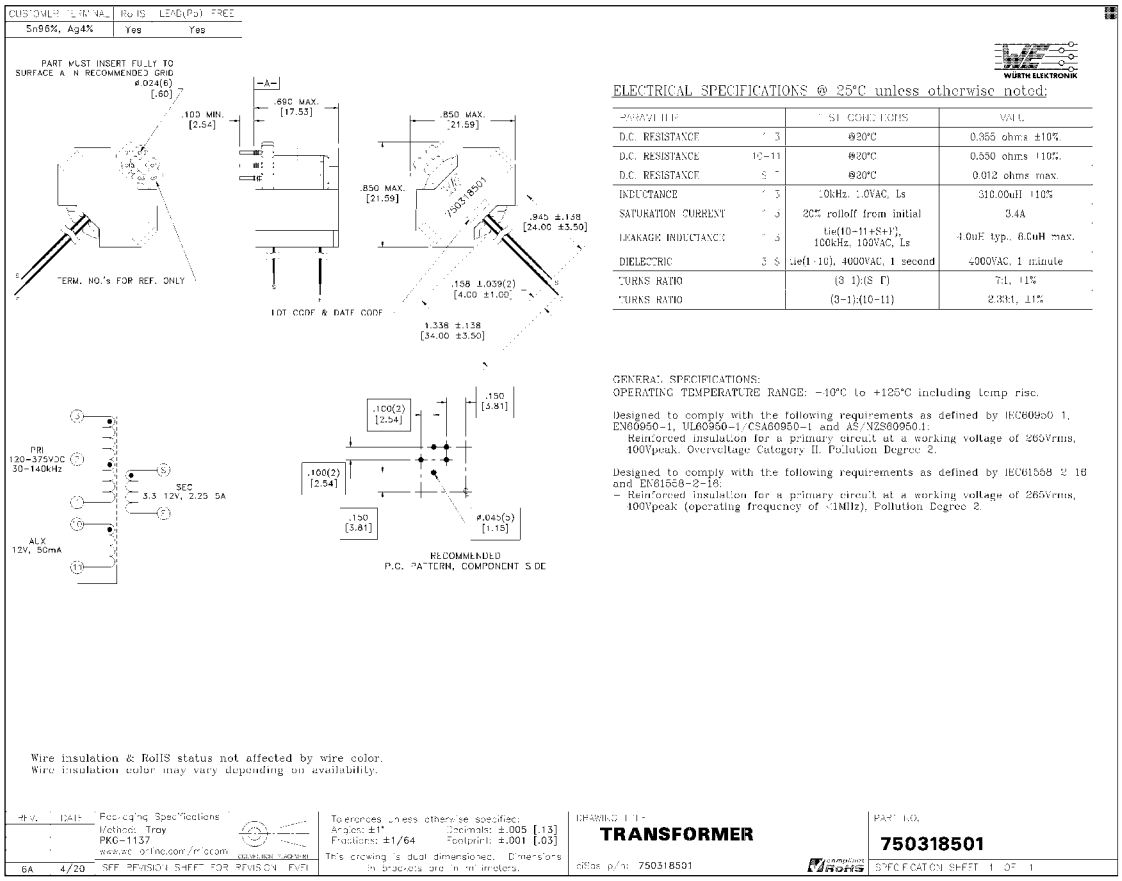

The transformer, together with an auxiliary winding, is used to supply the controller and provide the ON/OFF triggering information to the STCH03. Triggering signals to drive the primary side MOSFET are provided to the STCH03 ZCD pin through the network made by R20, R21, R22, R23, D5 and D6.

Moreover, a linear regulator stage, made by Q3, D8 and other few passives, connects the auxiliary winding and the controller V_{DD} pin to ensure a stable supply voltage across input and output voltages as well as load conditions. The output voltage regulation circuit is driven by a optocoupler (ISO1).

1.1.2 Power stage secondary side

The transformer secondary side embeds:

- the LDK320AM33R high input voltage LDO linear regulator (U3)
- the TS3431CILT voltage reference (U1) used to generate output voltage feedback to drive the optocoupler (ISO1)
- the synchronous rectification MOSFET (Q1) with the associated V_{DS} sensing network (D4, R14)
- the temperature sensing network composed by R17 and RT2
- the second daughter board (for digital control) containing the STM32G071K microcontroller (U9) that manages the application (see Section 1.2.1 STM32G071 microcontroller).

The LDO (U3) supplies the secondary side and the digital control section, including MCU post regulation, and provides the V_{CONN} as requested by USB Power Delivery standard to comply with Type-C Electronically Marked Cables (EMC). This feature allows the STEVAL-USBPD27S to provide up to 5 Amps.

The synchronous rectification (SR) mechanism contributes to maintain a higher efficiency. The low voltage logic level MOS (Q1) is driven by the microcontroller PWM signal which rectifies the high frequency transformer secondary voltage using a patented algorithm (for further details, see AN5499).

U2, D4, R14, C15, C16 constitute the sensing network monitoring Q1 drain voltage for SR implementation. The output of this network is connected to the MCU analog pin.

You can also monitor the board temperature through the sensing network composed of R17 and RT2. To reduce the overall power consumption, this sensing stage must be enabled by the MCU before measuring the temperature.

Figure 10. SR and V_{DS} sensing circuits on the transformer secondary side

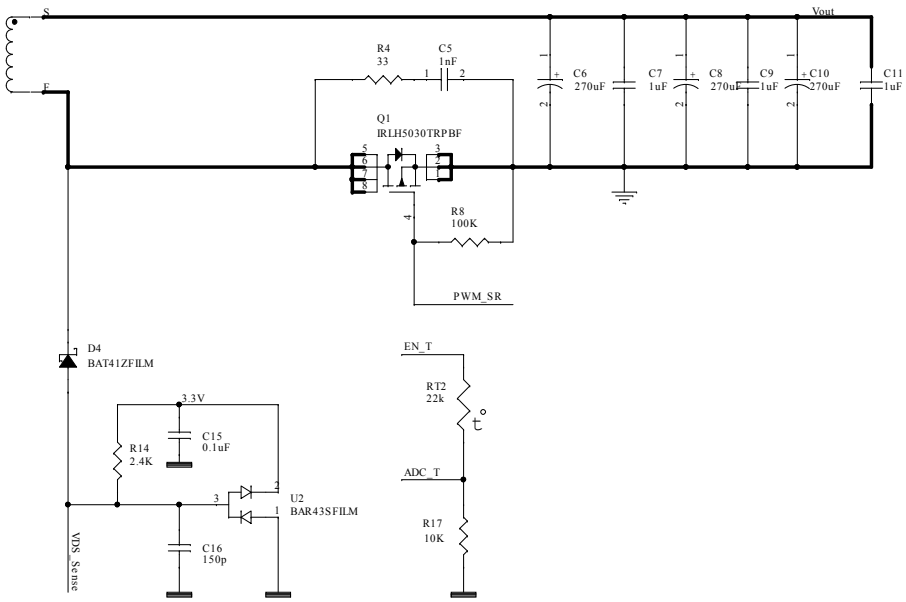

Moreover, the secondary side voltage is managed by the MCU which properly adapts the voltage divider ratio (R12, R13, R15, R16) as a function of the required operating profile (Figure 11. Output voltage divider driven by STM32G071) thanks to ST patented control algorithm.

Refer to AN5562 for a detailed description of the voltage control strategies used to obtain the best bus values (voltage and current) and dynamics.

Figure 11. Output voltage divider driven by STM32G071

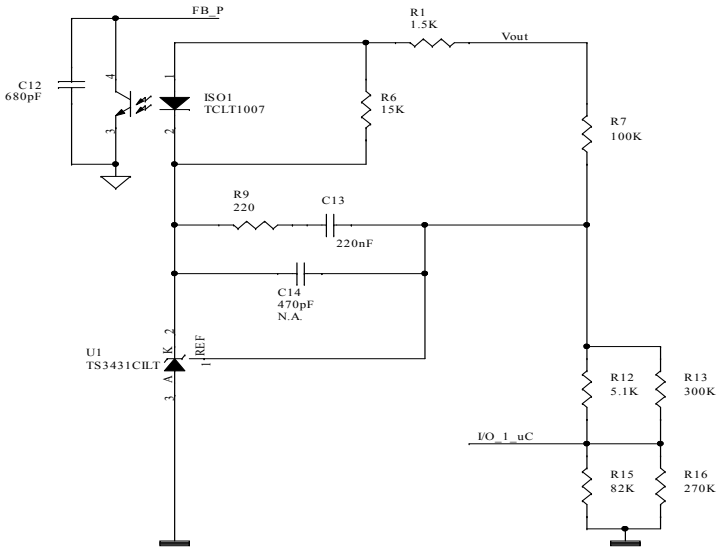

1.2 Digital control section

The digital control section is the core of the whole solution and includes the Type-C receptacle. Its main device is the STM32G071KBU6N microcontroller (U9) which embeds the UCPD peripheral.

The MCU is responsible for:

- the USB Type-C and Power Delivery stack running the USB-IF certified X-CUBE-USB-PD expansion package
- the adaptive synchronous rectification control algorithm
- the secondary side stage management to ensure correct V_{BUS} values
- load feed-forward
- protections: OVP, UVP, OC and short-circuit

The digital section also hosts the TCPP01-M12 Type-C port protection (U5) for power bus and communication channels, the V_{BUS} load switch and discharge mechanisms, and a current and voltage sensing stage.

The following pictures show how the high-density integration has been achieved thanks to the miniaturized devices (on the digital control stage front and back) specifically designed for this application segment.

Figure 12. STEVAL-USBPD27S front view

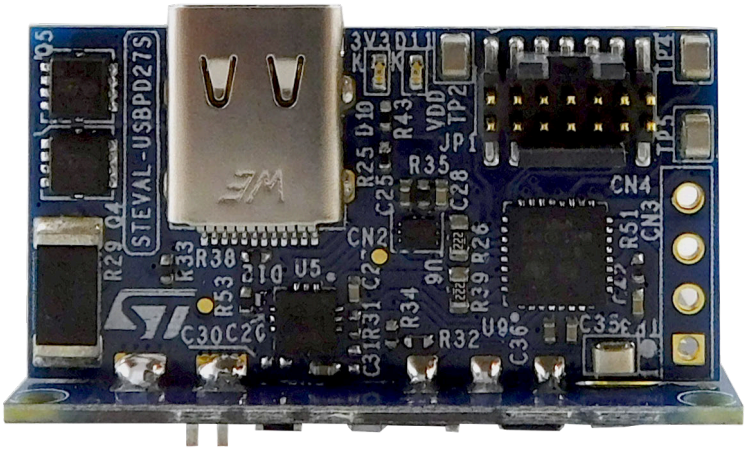

Figure 13. STEVAL-USBPD27S bottom view

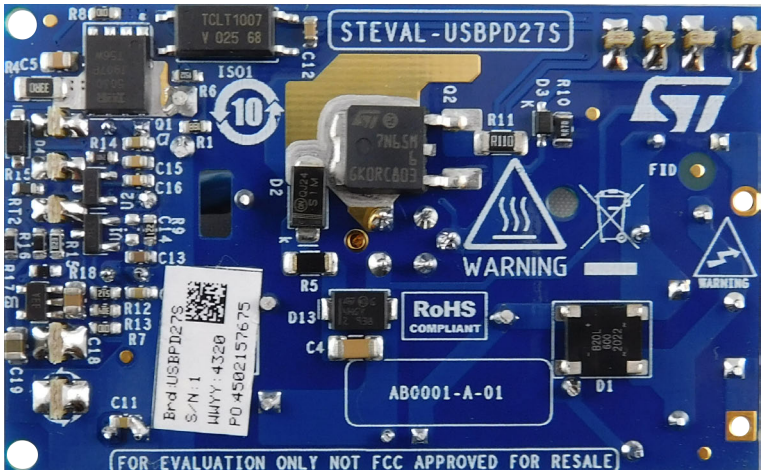

1.2.1 STM32G071 as controller of USB Type-C and PD and synchronous rectification

The STM32G071KBU6N microcontroller (U9), placed on the digital control board front side, manages the whole application. Based on the high-performance Arm® Cortex®-M0+ 32-bit RISC core, operating at up to 64 MHz frequency, it:

- integrates a USB Type-C™ and Power Delivery interface (UCPD) supporting the Power Delivery specification physical layer:
  - USB Type-C™ cable and connector specification
  - USB Power Delivery specification
- runs the USB-PD Middleware stack (X-CUBE-USB-PD)
- implements the USB-PD Device Policy Manager for the adapter
- performs the adaptive synchronous rectification algorithm
- manages the secondary side stage ensuring 20 mV and 50 mA resolution on the bus to perfectly cope with PPS feature thanks to ST patented control algorithm
- features OVP, UVP, OC and short-circuit protections

Figure 14. STM32G071KBU6N microcontroller schematics

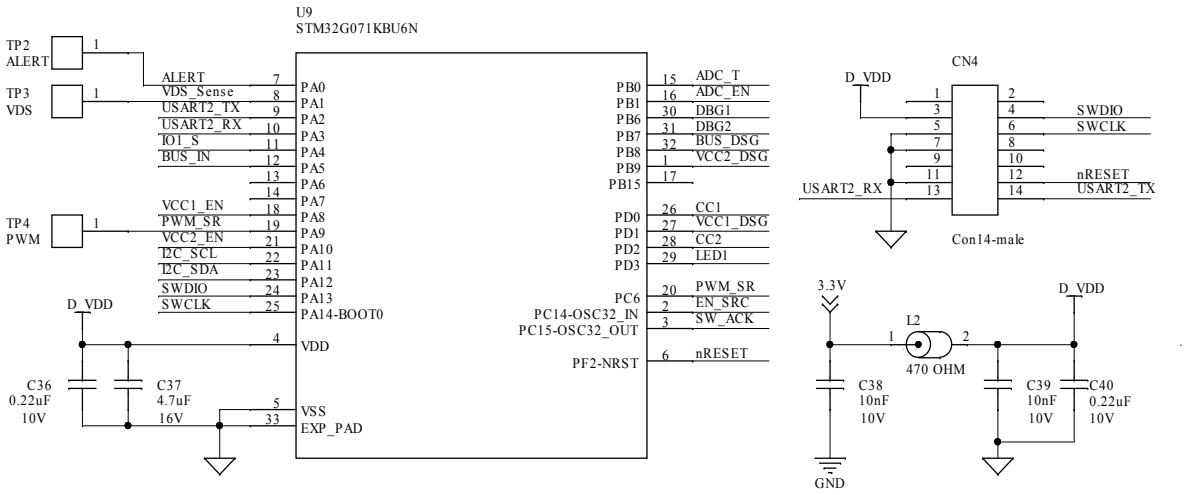

Thanks to the embedded UCPD interface, the microcontroller manages the USB-PD protocol.

The firmware running on the MCU is set up to make the solution act as a source, allowing it to run the following USB-PD functions:

- detection of a sink connection to the USB Type-C™ port (i.e., attach/detach detection), using the USB Type-C pull-up (Rp) resistors
- management of USB Power Delivery message transmission and reception, establishing a valid source-to-sink connection
- accomplishment of the PDO negotiation, managing the V_{BUS} power capabilities
- configure V_{CONN} when required

For further details on the UCPD interface features and STM32G071KBU6N capabilities, refer to RM0444.

Moreover, the microcontroller drives the synchronous rectification through a specific algorithm (as described in AN5499) which uses the following MCU peripherals:

- TIM1 timer to generate PWM in one pulse mode and to perform blanking window while detecting V_{DS} falling edges
- COMP1 and COMP2 internal comparators to detect the rising and falling edges of V_{DS} sensing signal and to trigger TIM1 timer
- the digital-to-analog converter (DAC) to set the thresholds of the comparators detecting V_{DS} edges
- TIM3 to generate blanking windows after MOS turn-off and to trigger ADC sampling of V_{DS}
- the analog-to-digital converter (ADC) to sense V_{DS}

The MCU uses a low-power timer peripheral (LPTIM1) to generate a dedicated PWM signal acting on the voltage dividers (R12, R13, R15, R16) which provide feedback to the primary side controller. This ST patented methodology allows controlling the voltage output and guaranteeing a voltage resolution in line with PPS requirements.

Through an additional sensing stage, the microcontroller also monitors the BUS voltage and current on the USB Type-C™ receptacle and checks if the BUS voltage and current meet the valid operating conditions for the application. If an unexpected BUS condition is detected, such as undervoltage, overvoltage or overcurrent, the MCU opens the BUS load switches (Q4 and Q5) and sends the information to the USB Power Delivery device policy manager.

1.2.2 USB Type-C™ receptacle, V_{BUS} protection and TCPP01-M12 USB Type-C™ CC line protection

On the front side, the digital control stage hosts the USB Type-C™ receptacle which represents the application access door, filtering USB-PD messages and related power.

The connector, two protection devices and two different discharge mechanisms protect the downstream circuitry from electrical overstress (EOS) or destructive electrostatic discharges (ESD).

The schematic section below shows how the USB Type-C™ connector and the ESDA15P60-1U1M (D9) high-power transient voltage suppressor (TVS) are directly connected to the V_{BUS} pin to ensure ESD protection at Type-C connector level (CN2).

Figure 15. Type-C receptacle with V_{BUS} protection ESDA15P60-1U1M

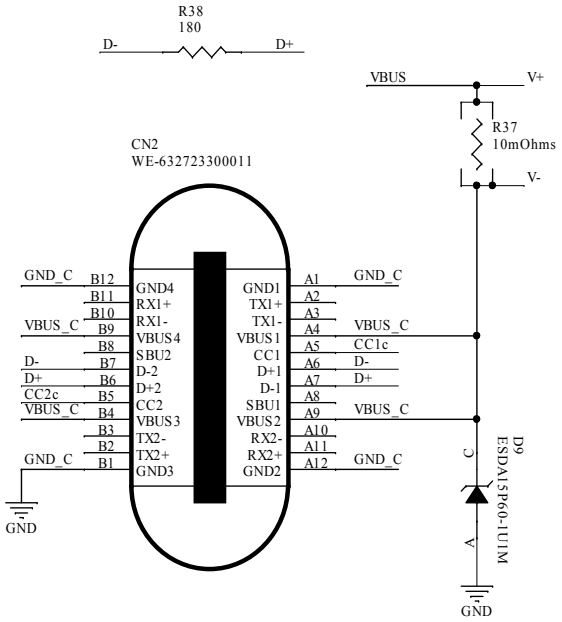

To ensure overvoltage protection on CC1 and CC2 pins, the new TCPP01-M12 (U5) ESD and USB Type-C port protection (companion chip of the STM32G0 MCUs) has been integrated, as CC lines may be subject to short-circuits with the V_{BUS} pin when removing the USB Type-C cable from the receptacle.

This device offers a 22 V tolerant ESD protection as per IEC61000-4-2 level 4 on the USB Type-C connector configuration channel (CC) pins.

The TCPP01-M12 protection allows managing the V_{BUS} path as it embeds a gate driver for the back-to-back load switch composed of two STL11N3LLH6 STripFET™ H6 Power MOSFETs (Q4 and Q5).

Figure 16. TCPP01-M12 protection schematics

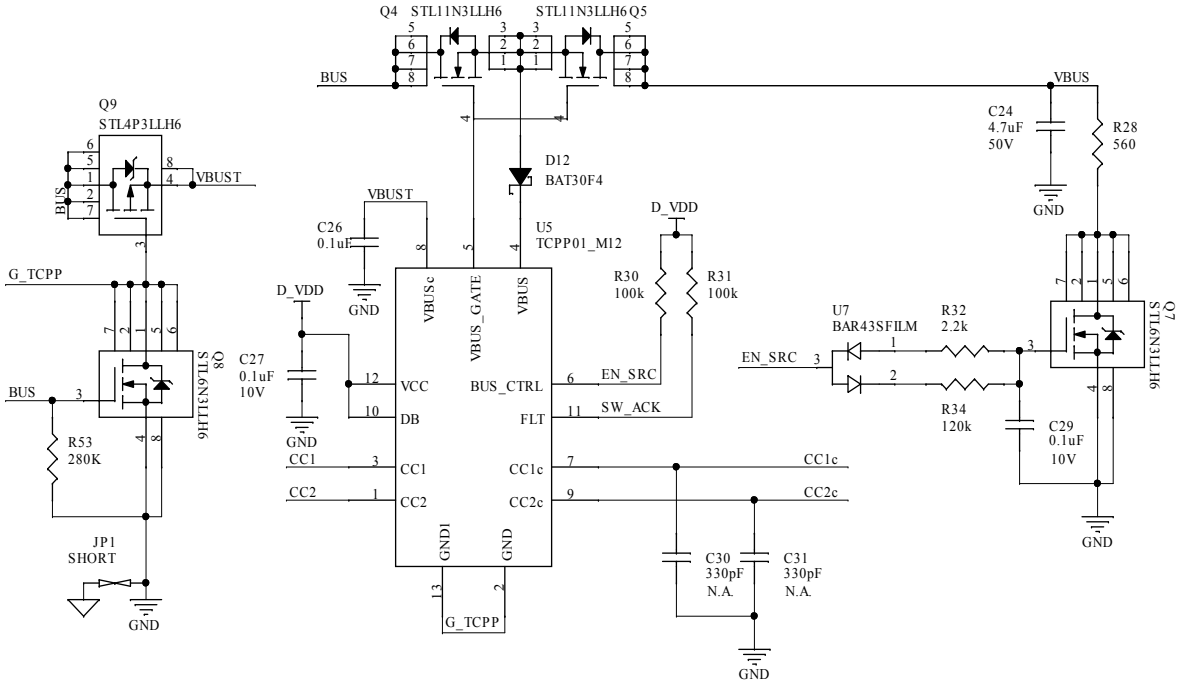

The device protects the adapter against any destructive electrostatic discharge (ESD) from the USB Type-C connector, in compliance with IEC61000-4-2 Level 4 standard, and provides surge immunity against electrical over stress (EOS) to prevent damage to the internal circuitry by offering up to 35 A, 8/20µs protection, as per the IEC61000-4-5 standard.

Q8 and Q9, acting on U5 supply pins, guarantee full compliance with USB-PD and Type-C specifications.

1.2.3 Discharge mechanisms

Two discharge mechanisms have been implemented to safely manage the V_{BUS}, both performed by STL6N3LLH6 MOSFETs.

The main one (Q7) is directly connected to the Type-C receptacle and is driven by the microcontroller (see the figure below). To ensure a timely and correct V_{BUS} 0 V (vSafe0V) safe level, after the detaching operation, Q7 discharges the bus path on the sink side: this is automatically enabled when the output is disabled by the MCU.

Figure 17. Auxiliary discharge mechanism

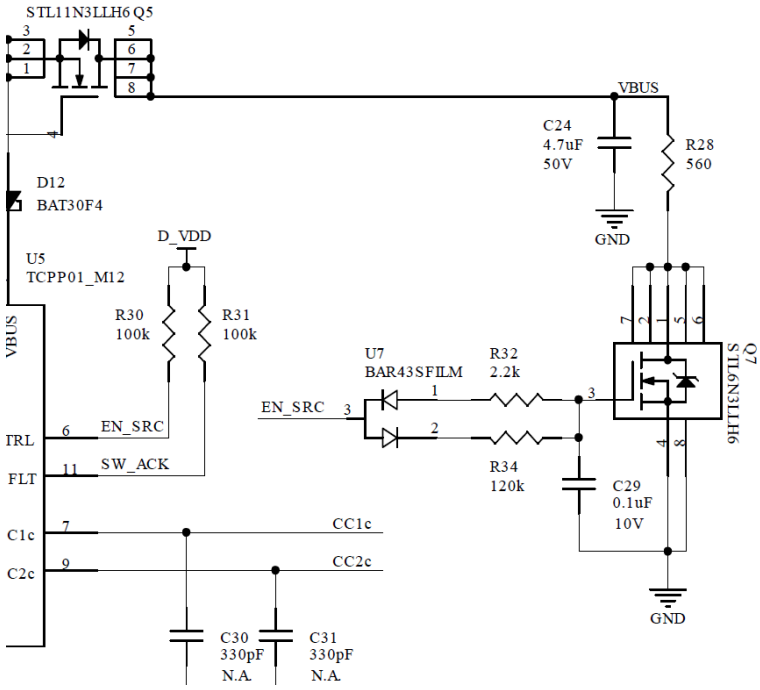

A secondary standalone auxiliary discharge mechanism is managed by another STL6N3LLH6 MOSFET (Q6), driven by the microcontroller through the BUS_DSG dedicated pin. This MOSFET, acting as a switch, ensures correct voltage transition on the V_{BUS} as stated in the USB Power Delivery standard.

Figure 18. Discharge mechanism

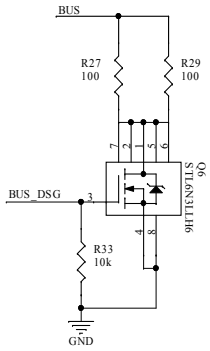

1.2.4 V_{CONN} management

The V_{CONN} is a dedicated supply voltage required to power up a cable mandatory to reach a maximum current higher than 3 A.

The STM32G071 MCU is able to identify operations on an EMC and, consequently, drive the STG3684AUTR (U6) low voltage dual SPDT switch with break-before-make feature, to enable the V_{CONN} on the unused CC line.

V_{CONN} discharge, needed when the V_{CONN} is switched off, is automatically performed by MCU.

Figure 19. STG3684AUTR switch used for the V_{CONN} management

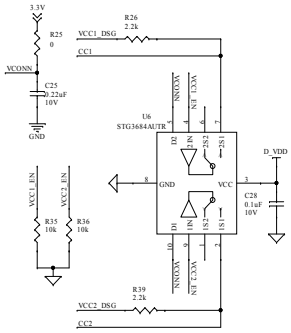

1.3 STEVAL-USBPD27S additional features

1.3.1 LEDs

The STEVAL-USBPD27S board is equipped with two LEDs:

- D10, signalling the digital control board is supplied with 3.3V coming from LDO
- D11, directly connected to the microcontroller and driven by the user application

1.3.2 Connectors

The STEVAL-USBPD27S blister also includes the STLINK-V3 MINI, with a 1.27mm pitch STDC14 debug connector and an STDC14 to STDC14 flat cable.

The STEVAL-USBPD27S on-board STDC14 debug connector (CN4) allows connecting the solution to the STLINK-V3 MINI for debugging or reprogramming the application code.

Figure 20. CN4 connector pin-out

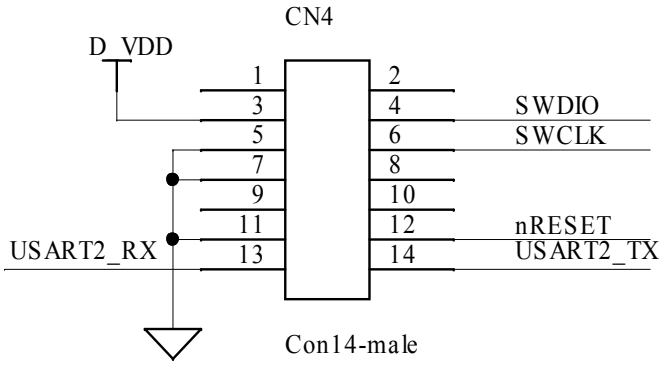

The STLINK-V3 MINI also allows using the Virtual COM port interface to put the microcontroller in communication with a host PC through its UART.

For further information on STLINK-V3 MINI, refer to UM2502.

For other debugging purposes, a UART connector (4-pin strip-line, not mounted) with a 3.3 V supply voltage, a ground and two other MCU pins may be assembled and used on CN3.

Figure 21. UART connector pin-out

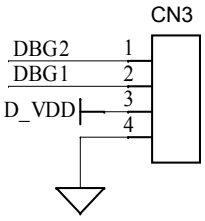

1.3.3 User test points

Table 2. Test point list and description

Test points	Function	Description
TP1	GND_P	GND on primary side
TP2	ALERT	MCU watchdog pin to monitor ALERT from the BUS sensing stage
TP3	V_{DS}	MCU ADC pin to monitor the V_{DS} on the SR MOS
TP4	PWM	PWM to drive the SR MOSFET
TP5	nRESET	Connected to the MCU NRST pin

2 Ordering information

Table 3. **Ordering information**

Part number	Description
STEVAL-USBPD27S	Compact 27W USB Type-C™ Power Delivery 3.1 with PPS adapter reference design
STSW-USBPD27SFW	Software package for STEVAL-USBPD27S

3 Schematic diagrams

Figure 22. STEVAL-USBPD27S board schematics (1 of 5)

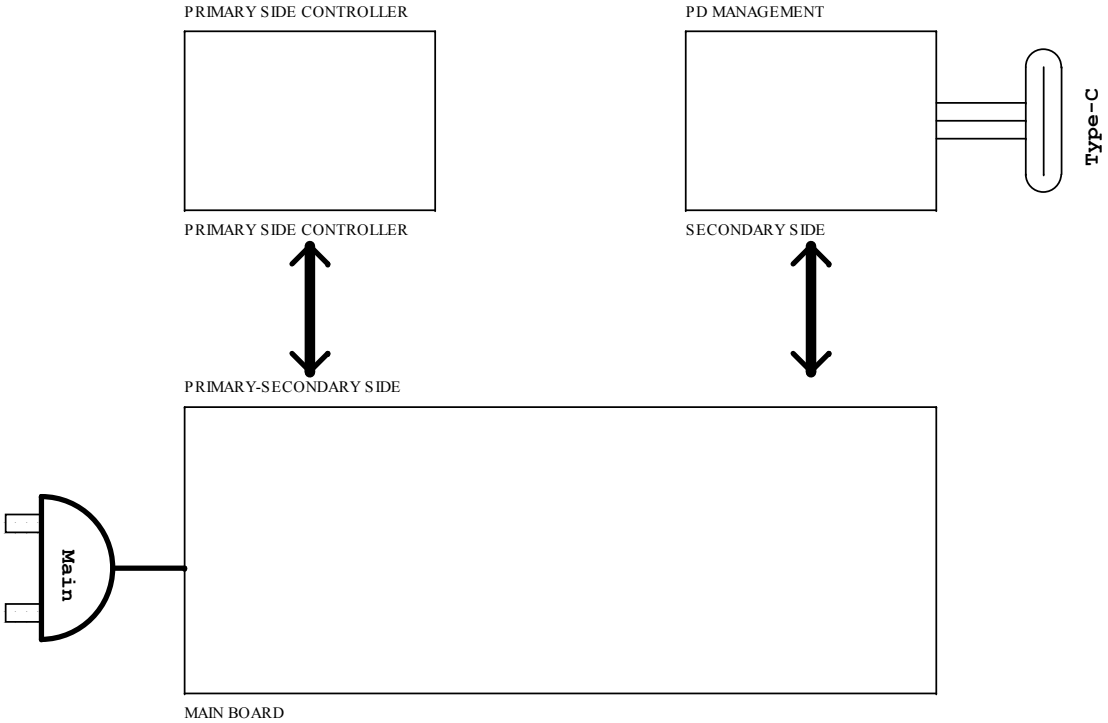

Figure 23. STEVAL-USBPD27S board schematics (2 of 5)

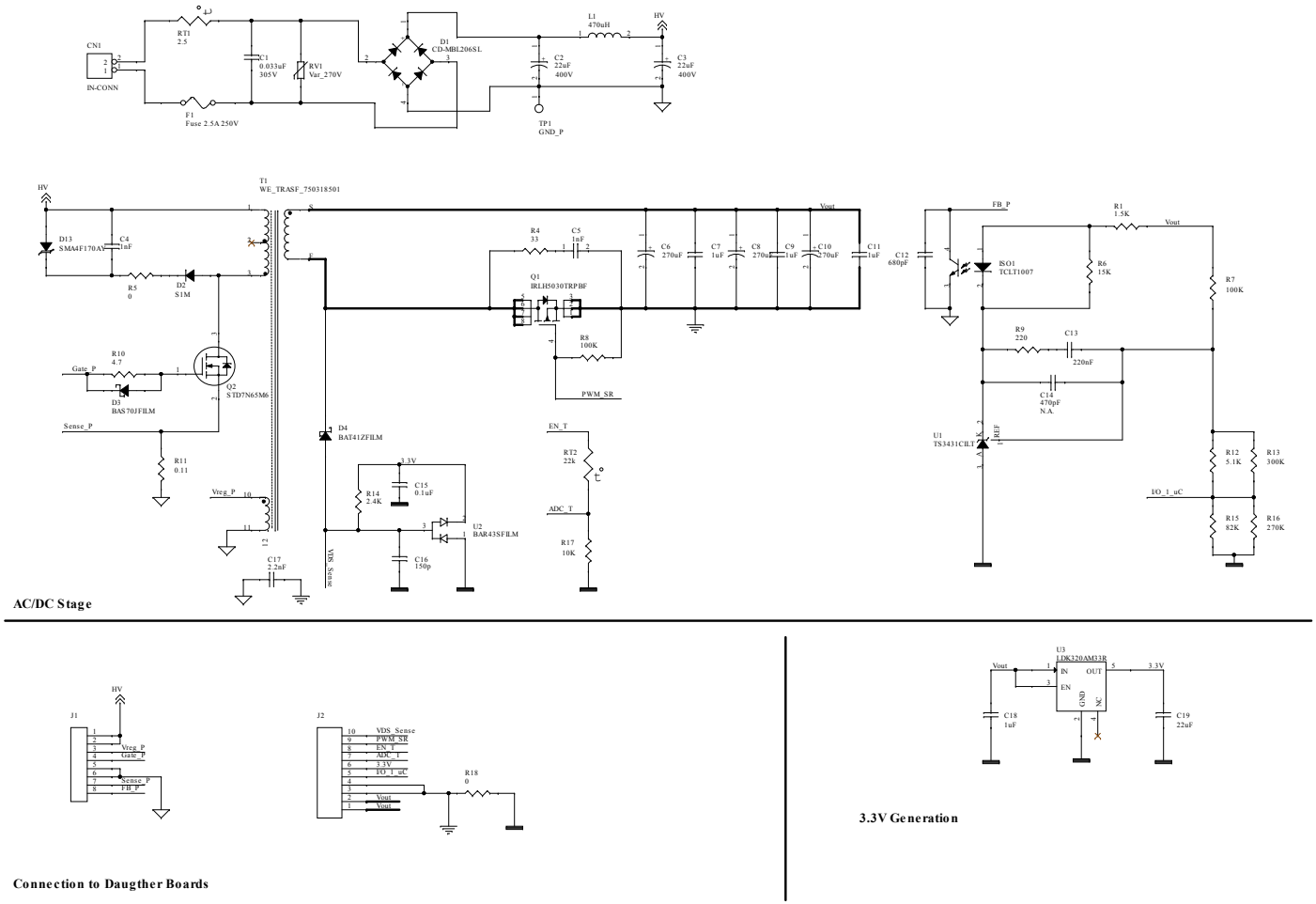

AC/DC Stage

Connection to Daugther Boards

3.3V Generation

Figure 24. **STEVAL-USBPD27S board schematics (3 of 5)**

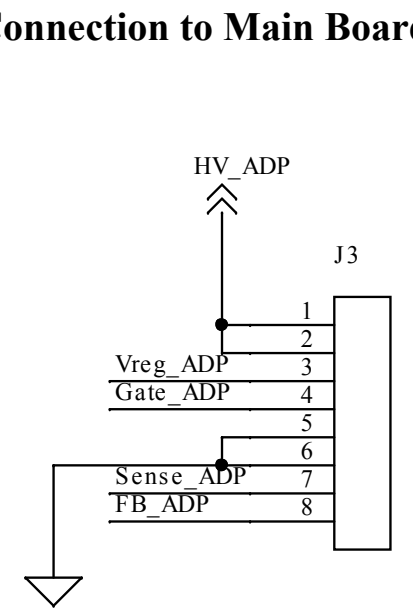

Figure 25. **STEVAL-USBPD27S board schematics (4 of 5)**

STCH03 Controller

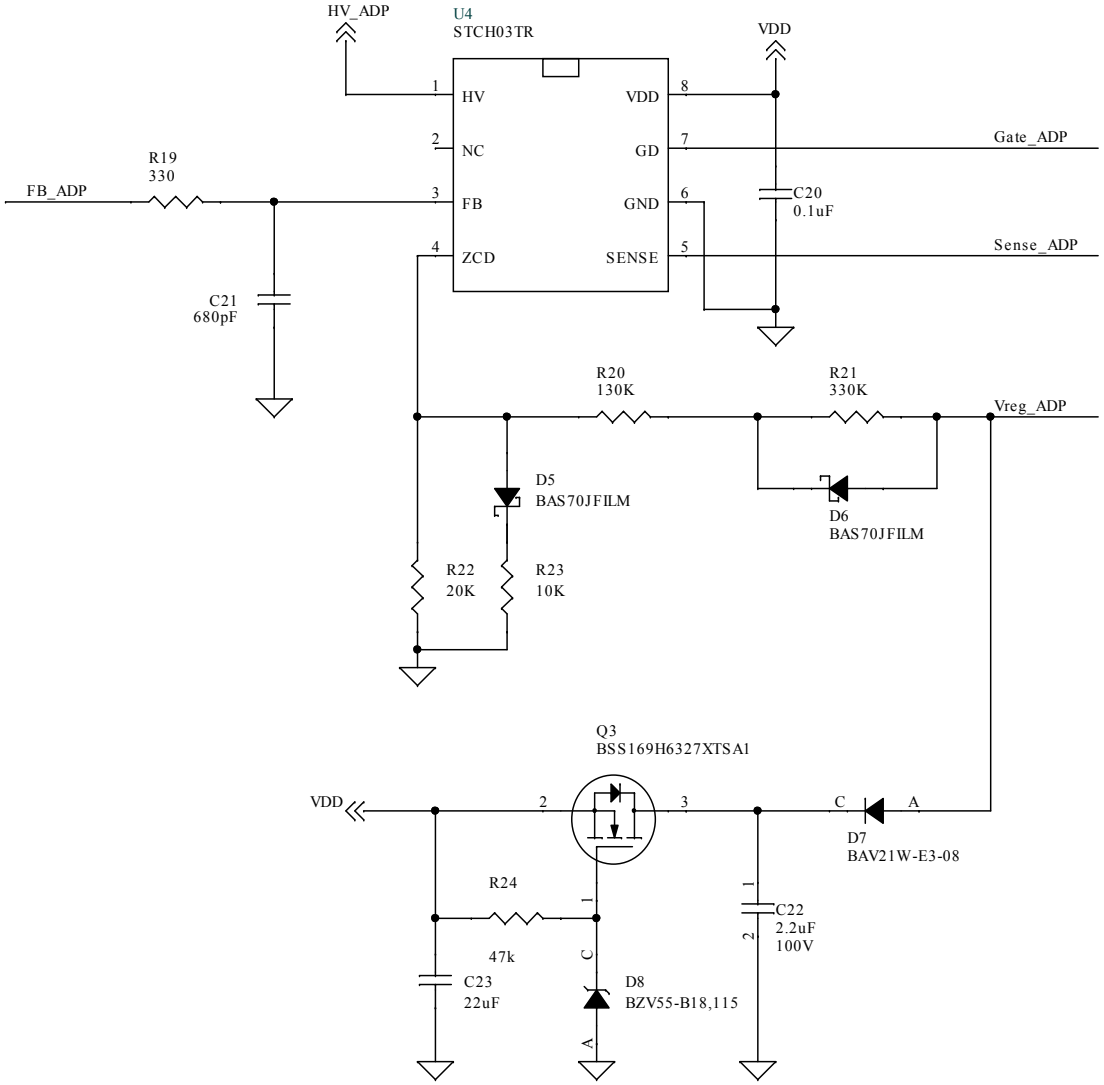

Figure 26. STEVAL-USBPD27S board schematics (5 of 5)

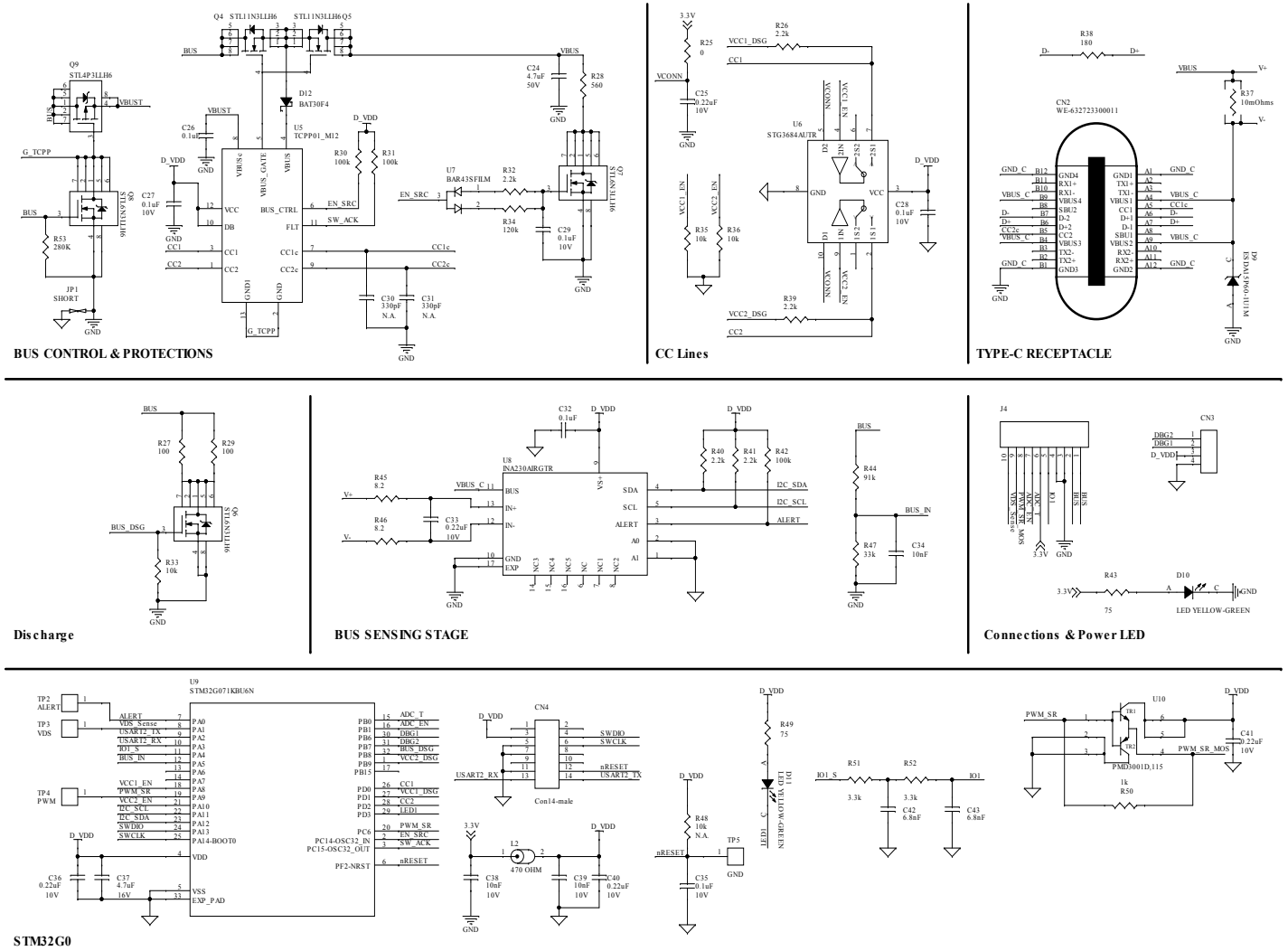

4 Bill of materials

Table 4. **Bill of materials**

Item	Q.ty	Ref.	Value	Description	Manufacturer	Order codes
1	1	C1	0.033µF, Radial, 305 V, 20 %	CAP FILM 0.033UF 20% 305VAC RAD	EPCOS (TDK)	B32921C3333M000
2	2	C2 C3	22µF, Radial,18x16.5 mm, 400 V, 20 %	Cap Pol Radial (Electrolytic); 7.50 mm C X 18.00 mm Dia X 15.00 mm H body	Nichicon	URZ2G220MHD
3	1	C4	1nF, 1206 (3216 Metric), 1000V (1kV) V, 10 %	CAP CER 1nF 1KV X7R 1206	Wurth Electronics Inc.	885342208018
4	1	C5	1nF, 0805 (2012 Metric), 100 V, 10 %	CAP CER 1nF 100V X7R 0805	Wurth Electronics Inc.	885012207116
5	3	C6 C8 C10	270µF, Radial, 6.3x11mm, 16 V, 20 %	Cap Pol Radial (Electrolytic); 2.50 mm C X 6.30 mm Dia X 11.00 mm H body	UNITED CHEMI-CON	APSG160ELL271MF08J
6	3	C7 C9 C11	1µF, 0603 (1608 Metric), 25 V, 20 %	CAP CER 1UF 25V X5R 0603	Wurth Electronics Inc.	885012106022
7	2	C12 C21	680pF, 0603 (1608 Metric), 50 V, 10 %	CAP CER 680pF 50V X7R 0603	Murata Electronics North America	GRM188R71H681KA01D
8	1	C13	220nF, 0603 (1608 Metric), 25 V, 10 %	CAP CER 0.220UF 25V X7R 0603	Murata Electronics North America	GCM188R71E224KA55D
9	1	C14 N.A.	470pF, 0603 (1608 Metric), 50 V, 5 %	CAP CER 470PF 50V C0G/NP0 0603	Wurth Electronics Inc.	885012006061
10	1	C15	0.1µF, 0603 (1608 Metric), 50 V, 10 %	CAP CER 0.1UF 50V X7R 0603	Wurth Electronics Inc.	885012206095
11	1	C16	150p, 0603 (1608 Metric), 50 V, 10 %	CAP CER 150pF 50V X7R 0603	Wurth Electronics Inc.	885012206078
12	1	C17	2.2nF, Radial, Disc, 250 V, 20 %	CAP CER 2200PF 250VAC RADIAL	Murata Electronics North America	DE2E3KY222MN3AM02F
13	1	C18	1µF, 0805 (2012 Metric), 25 V, 10 %	CAP CER 1UF 25V X7R 0805	Wurth Electronics Inc.	885012207078
14	1	C19	22µF, 0805 (2012 Metric), 10 V, 20 %	CAP CER 22uF 10V X5R 0805	Wurth Electronics	885012107011
15	1	C20	0.1µF, 0603 (1608 Metric), 50 V, 10 %	CAP CER 0.1UF 50V X7R 0603	Wurth Electronics Inc.	885012206095

Item	Q.ty	Ref.	Value	Description	Manufacturer	Order codes
16	1	C22	2.2µF, 1210 (3225 Metric), 100 V, 10 %	CAP CER 2.2uF 100V X7R 1210	Wurth Electronics Inc.	885382209002
17	1	C23	22µF, 1210 (3225 Metric), 25 V, 20 %	CAP CER 22UF 25V X5R 1210	Wurth Electronics Inc.	885012109014
18	1	C24	4.7µF, 1206 (3216 Metric), 50 V, 10 %	CAP CER 4.7uF 50V X7R 1206	Wurth Electronics Inc.	885012208094
19	5	C25 C33 C36 C40 C41	0.22µF, 0402 (1005 Metric), 10 V, 20 %	CAP CER 0.22UF 10V X5R 0402	Wurth Electronics Inc.	885012105011
20	1	C26	0.1µF, 0402 (1005 Metric), 25 V, 20 %	CAP CER 0.1UF 25V X5R 0402	Wurth Electronics Inc.	885012105018
21	5	C27 C28 C29 C32 C35	0.1µF, 0402 (1005 Metric), 10 V, 20 %	CAP CER 0.1UF 10V X5R 0402	Wurth Electronics Inc.	885012105010
22	2	C30 C31 N.A.	330pF, 0402 (1005 Metric), 25 V, 10 %	CAP CER 330pF 25V X7R 0402	Wurth Electronics Inc.	885012205041
23	3	C34 C38 C39	10nF, 0402 (1005 Metric), 10 V, 10 %	CAP CER 10000PF 10V X7R 0402	Wurth Electronics Inc.	885012205012
24	1	C37	4.7µF, 0603 (1608 Metric), 16 V, 10 %	CAP CER 4.7UF 16V X5R 0603	Murata	GRM188R61C475KAAJD
25	2	C42 C43	6.8nF, 0402 (1005 Metric), 10 V, 10 %	CAP CER 6800PF 10V X7R 0402	Wurth Electronics Inc.	885012205011
26	1	CN1 N.A.	IN-CONN, Custom	Pluggable Terminal Blocks WR-TBL PCB Model 311 2Pin 5.08mm Cls Vtcl	Wurth Electronics	691311500102
27	1	CN2	WE-632723300 011, TYPE-C RECEPTACLE	USB 3.1 TYPE C RECEPTACLE THT/SM	Wurth Electronics Inc.	632723300011
28	1	CN3 N.A.	con4-strip-female, Conn Header FEMALE 4POS	CONN HEADER FEMALE .100 STR 4POS	Wurth Electronics Inc.	61300411121
29	1	CN4	Con14-male, Conn header SMD 14POS 1.27MM	CONN HEADER SMD 14POS 1.27MM	Samtec Inc.	FTSH-107-01-F-DV-K-P-TR
30	1	D1	CD-MBL206SL, Chip, Concave Terminals, 600 V, 2 A	BRIDGE RECT 1PHASE 600V 2A	Bourns Inc.	CD-MBL206SL
31	1	D2	S1M, SMA, 1K V, 1 A	DIODE GEN PURP 1KV 1A SMA	Diodes Incorporated	S1M-13-F

Item	Q.ty	Ref.	Value	Description	Manufacturer	Order codes
32	1	D3	BAS70JFILM, SC-76, SOD-323, 70mA (DC) A	DIODE SCHOTTKY 70V 70MA SOD323	STM	BAS70JFILM
33	1	D4	BAT41ZFILM, SOD-123, 1V @ 200mA V, 200mA (DC) A	DIODE SCHOTTKY 100V 200MA SOD123	STM	BAT41ZFILM
34	2	D5 D6	BAS70JFILM, SC-76, SOD-323, 70mA (DC) A	DIODE SCHOTTKY 70V 70MA SOD323	STM	BAS70JFILM
35	1	D7	BAV21W-E3-08, SOD-123, 250mA (DC) A	DIODE GEN PURP 200V 250MA SOD123	Vishay Semiconductor Diodes Division	BAV21W-E3-08
36	1	D8	BZV55-B18,115, SOD-80C, 900mV @ 10mA V, 50nA @ 10.5V A, 500m W, 2 %	DIODE ZENER 18V 500MW SOD80C	Nexperia USA Inc.	BZV55-B15,115
37	1	D9	ESDA15P60-1U1M, 2-UDFN	TVS DIODE 13.2V 22.7V 1610	STM	ESDA15P60-1U1M
38	2	D10 D11	LED YELLOW-GREEN, 0402 (1005 Metric), 20mA	DIO Rectangle with Flat Top 1.00mm x 0.50mm, LED YELLOW-GREEN 20mA 0402 (1005 Metric)	Vishay Semiconductor Opto Division	VLMG1500-GS08
39	1	D12	BAT30F4, 0201 (0603 Metric), 300m A	DIODE SCHOTTKY 30V 300MA 0201	STM	BAT30F4
41	1	F1	Fuse 2.5A 250V, Through Hole, 250 V, 2.5 A	Fuses with Leads (Through Hole) 2.5A 250V SS-5F-RADIAL FA FUSE	Bussmann / Eaton	SS-5F-2-5A-BK
42	1	ISO1	TCLT1007, 4-SMD, Gull Wing	OPTOISOLATR 5KV TRANSISTOR 4-SOP	Vishay Semiconductor Opto Division	TCLT1007
43	1	J1 N.A.	con8-pcb-female, pcb-holes	PCB HOLES 8POS		
44	1	J2 N.A.	con10-pcb-female, pcb-holes	PCB HOLES 10POS		
45	1	J3 N.A.	con8-pcb-male, pcb-strip	PCB STRIP 8POS		
46	1	J4 N.A.	con10-pcb-male, pcb-strip	PCB STRIP 10POS		
47	1	JP1 N.A.	SHORT	2 PIN SHORTED TO CONNECT DIFFERENT NETS		

Item	Q.ty	Ref.	Value	Description	Manufacturer	Order codes
48	1	L1	470µH, Radial, 10 %	FIXED IND 470UH 350MA 2.4 OHM TH	Wurth Electronics Inc.	7447462471
49	1	L2	470 Ω, 0402 (1005 Metric)	FERRITE BEAD 470 OHM 0402 1LN	Wurth Electronics Inc.	7427927141
50	1	Q1	IRLH5030TRP BF, PQFN 5mm x 6mm, 100 V, 88 A	N-channel 100 V, 9.9 mO typ., 88A	Infineon	IRLH5030TRPBF
51	1	Q2	STD7N65M6, TO-252-3, DPAK (2 Leads + Tab), SC-63	MOSFET N-CH 650V 5A DPAK	STM	STD7N65M6
52	1	Q3	BSS169H6327 XTSA1, TO-236-3, SC-59, SOT-23-3	MOSFET N-CH 100V 170MA SOT23	Infineon Technologies	BSS169H6327XTSA1
53	2	Q4 Q5	STL11N3LLH6, 8-PowerVDFN	MOSFET N-CH 30V 11A POWERFLAT	STM	STL11N3LLH6
54	3	Q6 Q7 Q8	STL6N3LLH6, 6-PowerWDFN	MOSFET N-CH 30V PWRFLT2X2	STM	STL6N3LLH6
55	1	Q9	STL4P3LLH6, 6-PowerWDFN	MOSFET N-CH 30V PWRFLT2X2	STM	STL4P3LLH6
56	1	R1	1.5k, 0603 (1608 Metric), 0.1W, 1/10 W, 1 %	CHIP RESISTOR SMD 1k Ohm1% 1/10W 0603	Yageo	RC0603FR-071K5L
57	1	R4	33, 1206 (3216 Metric), 0.25W, 1/4 W, 1 %	RES SMD 1% 1/4W 1206	TE Connectivity	CRG1206F33R
58	1	R5	0, 1206 (3216 Metric), 0.25W, 1/4 W, 1 %	RES SMD 1% 1/4W 1206	Vishay	CRCW12060000Z0EA
59	1	R6	15k, 0603 (1608 Metric), 0.1W, 1/10 W, 1 %	CHIP RESISTOR SMD 12k Ohm1% 1/10W 0603	Yageo	RC0603FR-0715KL
60	2	R7 R8	100k, 0603 (1608 Metric), 0.1W, 1/10 W, 1 %	CHIP RESISTOR SMD 100k Ohm1% 1/10W 0603	Yageo	RC0603FR-07100KL
61	1	R9	220, 0603 (1608 Metric), 0.1W, 1/10 W, 1 %	CHIP RESISTOR SMD 1k Ohm1% 1/10W 0603	Yageo	RC0603FR-07220RL
62	1	R10	4.7, 0805 (2012 Metric), 0.1W, 1/10 W, 1 %	RES SMD 4.7 OHM 1% 1/8W 0805	Vishay	CRCW08054R70FKEA
63	1	R11	0.11, 1206 (3216 Metric), 0.1W, 1/10 W, 1 %	CHIP RESISTOR SMD 1% 1/4W 1206	TE Connectivity	RLP73K2BR11FTDF

Item	Q.ty	Ref.	Value	Description	Manufacturer	Order codes
64	1	R12	5.1k, 0603 (1608 Metric), 0.1W, 1/10 W, 1 %	CHIP RESISTOR SMD 12k Ohm1% 1/10W 0603	Yageo	RC0603FR-075K1L
65	1	R13	300k, 0603 (1608 Metric), 0.1W, 1/10 W, 1 %	CHIP RESISTOR SMD 300k Ohm1% 1/10W 0603	Yageo	RC0603FR-07300K
66	1	R14	2.4k, 0603 (1608 Metric), 0.1W, 1/10 W, 1 %	CHIP RESISTOR SMD 2.4K Ohm 1% 1/10W 0603	Vishay	CRCW06032K40FKEA
67	1	R15	82k, 0603 (1608 Metric), 0.1W, 1/10 W, 1 %	CHIP RESISTOR SMD 69.8k Ohm1% 1/10W 0603	Panasonic	ERA3AEB823V
68	1	R16	270k, 0603 (1608 Metric), 0.1W, 1/10 W, 1 %	CHIP RESISTOR SMD 280k Ohm1% 1/10W 0603	Vishay	CRCW0603270KFKEA
69	1	R17	10k, 0603 (1608 Metric), 0.1W, 1/10 W, 1 %	CHIP RESISTOR SMD 10K Ohm 1% 1/10W 0603	Vishay	CRCW060310K0FKEA
70	1	R18	0, 0603 (1608 Metric), 0.1W, 1/10 W, 1 %	CHIP RESISTOR SMD 0 Ohm 1% 1/10W 0603	Vishay	CRCW06030000Z0EB
71	1	R19	330, 0603 (1608 Metric), 0.125W, 1/8 W, 1 %	CHIP RESISTOR SMD 0 Ohm 1% 1/10W 0603	Panasonic	ERJ3EKF3300V
72	1	R20	130k, 0603 (1608 Metric), 0.063W, 1/16 W, 1 %	CHIP RESISTOR SMD 1% 1/10W 0603	Yageo	232270461304
73	1	R21	330k, 0603 (1608 Metric), 0.1W, 1/10 W, 1 %	CHIP RESISTOR SMD 1% 1/10W 0603	Vishay	CRG0603F330K
74	1	R22	20k, 0603 (1608 Metric), 1 W, 1 %	CHIP RESISTOR SMD 1% 1/10W 0603	Yageo	RC0603FR-0720KL
75	1	R23	10k, 0603 (1608 Metric), 0.125W, 1/8 W, 1 %	CHIP RESISTOR SMD 1% 1/10W 0603	Vishay	CRCW060310K0FKEA
76	1	R24	47k, 0805 (2012 Metric), 0.063W, 1/16 W, 1 %	RES SMD 1% 1/8W 0805	Vishay	CRCW080547K0FKEA
77	1	R25	0, 0402 (1005 Metric), 0.063W, 1/16 W, 1 %	CHIP RESISTOR SMD 1% 1/16W 0402	Vishay	CRCW04020000Z0ED
78	2	R26 R39	2.2k, 0603 (1608 Metric), 0.063W, 1/16 W, 1 %	RES SMD 1% 1/10W 0603	Yageo	RC0603FR-072K2L

Item	Q.ty	Ref.	Value	Description	Manufacturer	Order codes
79	2	R27 R29	100, 2512 (6332 metric), 0.063W, 1/16 W, 1 %	Thick Film Chip Resistor	Vishay	CRCW2512100RFKEG
80	1	R28	560, 0805 (2012 Metric), 0.5W, 1/2 W, 0.5 %	RES SMD 1% 1/8W 0805	Vishay	CRCW0805560RFKEA
81	3	R30 R31 R42	100k, 0402 (1005 Metric), 0.063W, 1/16 W, 1 %	CHIP RESISTOR SMD 1% 1/16W 0402	Panasonic	ERJ-2RKF1003X
82	3	R32 R40 R41	2.2k, 0402 (1005 Metric), 0.063W, 1/16 W, 1 %	CHIP RESISTOR SMD 1% 1/16W 0402	Vishay	CRCW04022K20FKED
83	3	R33 R35 R36	10k, 0402 (1005 Metric), 0.063W, 1/16 W, 1 %	CHIP RESISTOR SMD 1% 1/16W 0402	Yageo	RC0402FR-0710KL
84	1	R34	120k, 0402 (1005 Metric), 0.063W, 1/16 W, 1 %	CHIP RESISTOR SMD 1% 1/16W 0402	TE Connectivity	CRG0402F120K
85	1	R37	10mΩ, 1206 (3216 Metric), 0.063W, 1/16 W, 1 %	RES 0.01 OHM 0.5% 1/2W 1206 WIDE	Ohmite	FC4TR010DER
86	1	R38	180, 0402 (1005 Metric), 0.063W, 1/16 W, 1 %	CHIP RESISTOR SMD 1% 1/16W 0402	Vishay	CRCW0402180RFKED
87	2	R43 R49	75, 0402 (1005 Metric), 0.063W, 1/16 W, 1 %	CHIP RESISTOR SMD 1% 1/16W 0402	Yageo	RC0402FR-0775RL
88	1	R44	91k, 0402 (1005 Metric), 0.063W, 1/16 W, 1 %	CHIP RESISTOR SMD 1% 1/16W 0402	Vishay	CRCW040291K0FKED
89	2	R45 R46	8.2, 0402 (1005 Metric), 0.063W, 1/16 W, 1 %	CHIP RESISTOR SMD 1% 1/16W 0402	Vishay	CRCW04028R20FKED
90	1	R47	33k, 0402 (1005 Metric), 0.063W, 1/16W, 1 %	CHIP RESISTOR SMD 1% 1/16W 0402	TE Connectivity	CRG0402F33K
91	1	R48 N.A.	10k, 0402 (1005 Metric), 0.063W, 1/16W, 1 %	CHIP RESISTOR SMD 1% 1/16W 0402		
92	1	R50	1k, 0402 (1005 Metric), 0.063W, 1/16W, 1 %	CHIP RESISTOR SMD 1% 1/16W 0402	Vishay	CRCW04021K00FKED

Item	Q.ty	Ref.	Value	Description	Manufacturer	Order codes
93	2	R51 R52	3.3k, 0402 (1005 Metric), W, 20 %	CHIP RESISTOR SMD 1% 1/16W 0402	Panasonic	ERJ2RKF3301X
94	1	R53	280K, 0402 (1005 Metric), 180m W, 5 %	CHIP RESISTOR SMD 1% 1/16W 0402	Panasonic	ERJ2RKF2803XANY
95	1	RT1	2.5, TH 6mm D11.5mm, 20%	ICL 2.5 OHM 20% 11.5MM	EPCOS (TDK)	B57236S0259M000
96	1	RT2	22k, 0603 (1608 Metric), W, 5%	THERMISTOR NTC 22KOHM 4386K 0603	EPCOS (TDK)	B57352V5223J060
97	1	RV1	Var_270V, Through Hole Disc 7mm	DISK VARISTOR STANDARD 7MM; 275V	Wurth Electronics Inc.	820572711
98	1	T1	WE_TRASF_750318501, Ext-Rail + Flying Wires	Wurth-Trasformer ratio 3:1(S-F);3:1(10-12);3:1(12-11),2.5A	Wurth Electronics Inc.	750318501
99	1	TP1	GND_P, 0.100" Dia x 0.180" L (2.54mm x 4.57mm)	TEST POINT PC MINI .040"D BLACK	Keystone Electronics	5001
100	1	TP2	ALERT, 0.079" L x 0.047" W (2.00mm x 1.20mm)	PC TEST POINT NATURAL	Harwin Inc.	S2751-46R
101	1	TP3	VDS, 0.079" L x 0.047" W (2.00mm x 1.20mm)	PC TEST POINT NATURAL	Harwin Inc.	S2751-46R
102	1	TP4	PWM, 0.079" L x 0.047" W (2.00mm x 1.20mm)	PC TEST POINT NATURAL	Harwin Inc.	S2751-46R
103	1	TP5	GND, 0.079" L x 0.047" W (2.00mm x 1.20mm)	PC TEST POINT NATURAL	Harwin Inc.	S2751-46R
104	1	U1	TS3431CILT, TO-236-3, SC-59, SOT-23-3	IC VREF SHUNT ADJ SOT23-3	STM	TS3431CILT
105	1	U2	BAR43SFILM, TO-236-3, SC-59, SOT-23-3	DIODE ARRAY SCHOTTKY 30V SOT23-3	STM	BAR43SFILM
106	1	U3	LDK320AM33R, SC-74A, SOT-753	IC REG LDO 3.3V 0.2A SOT23-5	STM	LDK320AM33R
107	1	U4	STCH03TR, 8-SOIC (0.154", 3.90mm Width)	OFFLINE PWM CONTROLLER FOR LOW S	STM	STCH03TR
108	1	U5	TCPP01-M12, 3X3X1 mm	IC USB Type-C Port Protection	STM	TCPP01-M12
109	1	U6	STG3684AUTR, 10-UFQFN	IC SWITCH DUAL SPDT 10QFN	STM	STG3684AUTR

Item	Q.ty	Ref.	Value	Description	Manufacturer	Order codes
110	1	U7	BAR43SFILM, TO-236-3, SC-59, SOT-23-3	DIODE ARRAY SCHOTTKY 30V SOT23-3	STM	BAR43SFILM
111	1	U8	INA230AIRGTR, 16-VFQFN Exposed Pad	IC CURRENT SHUNT MONITOR 16QFN	Texas Instruments	INA230AIRGTR
112	1	U9	STM32G071KBU6N, 5X5 mm	ARM Microcontrollers - MCU 16/32-BITS MICROS-128KB FLASH	STM	STM32G071KBU6N
113	1	U10	PMD3001D,115, SC-74, SOT-457	IC MOSFET DRIVER 6TSOP	Nexperia USA Inc.	PMD3001D,115
114	1	AB0001-A-01	PCB-FR4, 59.27x35.99x0.97 mm	MAIL BOARD	P2S	
115	1	AB0002-A-01	PCB-FR4, 20.79x35.99x0.97 mm	CONTROL BOARD	P2S	
116	1	AB0003-A-01	PCB-FR4, 16.4x14.5x0.97 mm	DRIVER BOARD	P2S	
117	1	ST-LINKV3		STLINK-V3MINI Compact in-circuit debugger and programmer for STM32	STM	STLINK-V3MINI

Revision history

Table 5. Document revision history

Date	Version	Changes
08-Oct-2020	1	Initial release.
01-Sep-2021	2	Updated Introduction, Section 1 System architecture and Section 2 Ordering information.

Contents

1 System architecture 2

1.1 Power section 4

1.1.1 Power stage primary side 6

1.1.2 Power stage secondary side 8

1.2 Digital control section 10

1.2.1 STM32G071 as controller of USB Type-C and PD and synchronous rectification 11

1.2.2 USB Type-C™ receptacle, VBUS protection and the TCPP01-M12 USB Type-C™ CC lines protection 12

1.2.3 Discharge mechanisms 14

1.2.4 VCONN management 15

1.3 STEVAL-USBPD27S additional features 16

1.3.1 LEDs 16

1.3.2 Connectors 16

1.3.3 User test points 17

2 Ordering information 18

3 Schematic diagrams 19

4 Bill of materials 24

Revision history 32

Contents 33

List of tables 34

List of figures 35

List of tables

Table 1. STEVAL-USBPD27S overall power electrical features . . . 5
Table 2. Test point list and description . . . 17
Table 3. Ordering information . . . 18
Table 4. Bill of materials . . . 24
Table 5. Document revision history . . . 32

List of figures

Figure 1. STEVAL-USBPD27S reference board . . . 1
Figure 2. STEVAL-USBPD27S system block scheme . . . 2
Figure 3. STEVAL-USBPD27S main components (bottom view) . . . 3
Figure 4. STEVAL-USBPD27S main components (top view) . . . 3
Figure 5. STEVAL-USBPD27S power control board (side view) . . . 4
Figure 6. STEVAL-USBPD27S digital control board . . . 4
Figure 7. AC-DC stage . . . 6
Figure 8. Power control daughter board . . . 6
Figure 9. RM8 core transformer specifications . . . 8
Figure 10. SR and V_{DS} sensing circuits on the transformer secondary side . . . 9
Figure 11. Output voltage divider driven by STM32G071 . . . 10
Figure 12. STEVAL-USBPD27S front view . . . 11
Figure 13. STEVAL-USBPD27S bottom view . . . 11
Figure 14. STM32G071KBU6N microcontroller schematics . . . 12
Figure 15. Type-C receptacle with V_{BUS} protection ESDA15P60-1U1M . . . 13
Figure 16. TCPP01-M12 protection schematics . . . 14
Figure 17. Auxiliary discharge mechanism . . . 15
Figure 18. Discharge mechanism . . . 15
Figure 19. STG3684AUTR switch used for the V_{CONN} management . . . 16
Figure 20. CN4 connector pin-out . . . 16
Figure 21. UART connector pin-out . . . 17
Figure 22. STEVAL-USBPD27S board schematics (1 of 5) . . . 19
Figure 23. STEVAL-USBPD27S board schematics (2 of 5) . . . 20
Figure 24. STEVAL-USBPD27S board schematics (3 of 5) . . . 21
Figure 25. STEVAL-USBPD27S board schematics (4 of 5) . . . 22
Figure 26. STEVAL-USBPD27S board schematics (5 of 5) . . . 23

IMPORTANT NOTICE – PLEASE READ CAREFULLY

STMicroelectronics NV and its subsidiaries (“ST”) reserve the right to make changes, corrections, enhancements, modifications, and improvements to ST products and/or to this document at any time without notice. Purchasers should obtain the latest relevant information on ST products before placing orders. ST products are sold pursuant to ST’s terms and conditions of sale in place at the time of order acknowledgement.

Purchasers are solely responsible for the choice, selection, and use of ST products and ST assumes no liability for application assistance or the design of Purchasers’ products.

No license, express or implied, to any intellectual property right is granted by ST herein.

Resale of ST products with provisions different from the information set forth herein shall void any warranty granted by ST for such product.

ST and the ST logo are trademarks of ST. For additional information about ST trademarks, please refer to www.st.com/trademarks. All other product or service names are the property of their respective owners.

Information in this document supersedes and replaces information previously supplied in any prior versions of this document.

© 2021 STMicroelectronics – All rights reserved