Getting started with the STEVAL-IFP029V1 for the IPS4260L high speed quad low-side driver with dedicated GUI

Introduction

The STEVAL-IFP029V1 evaluation board is designed to analyze the functions of the IPS4260L fast quad low-side intelligent power switch.

The board is designed to meet the industrial standard requirements for:

1. galvanic isolation between logic and power stages, using high-speed dual-channel optocouplers for signals forwarded to the device and for feedback signals;
2. reverse polarity protection: D1 protects V_{CC} (power stage) supply voltage, whereas D8 protects V_{DD} (logic stage) supply voltage against reverse polarity;
3. EMC requirements (surge on load pins and V_{CC} rail, fast transient/burst, ESD contact, and air).

   The STEVAL-IFP029V1 meets IEC61000-4-2, IEC61000-4-4 and IEC61000-4-5 industrial standards with the following tested conditions:

   – ±2.8 kV surge pulse (42 Ω coupling) on load pins;
   – ±1.0 kV surge pulse (2 Ω coupling) on V_{CC} rail;
   – ±5.5 kV fast transient/burst;
   – ±24 kV ESD air;
   – ±12 kV ESD contact.

   On-board TVS devices on V_{CC} (U8), V_Z (U2), and V_{DD} (U9) clamp overvoltage for surge tests.

1 Getting started

1.1 Overview

The STEVAL-IFP029V1 dual layer design meets the thermal requirements of the application: dedicated copper areas reduce Z_{th} and enhance the thermal dissipation response when the device is used in switching mode.

The red LED (D3) turns on when the IPS4260L channel-independent thermal protection is active.

R17, R18, R19, and R20 resistors activate the open load detection feature integrated in the IPS4260L: the second red LED (D2) is turned on if one, or more, of the four outputs are open.

The board mounts four green LEDs (D4, D5, D6, and D7), one for each of the four output stages. Each green LED turns on when the corresponding channel is activated.

You can modify some features by applying few changes to the application components. For example, you can modify the default current limitation threshold through R23 (default = 1 A), or the cut-off duration time (default = 2 ms) through R4. For further details, refer to the IPS4260L datasheet.

The STSW-IFP029GUI user-friendly GUI allows driving the IPS4260L. To use the GUI, connect the STEVAL-IFP029V1 through the STEVAL-PCC009V2 to a Windows PC or laptop.

Figure 1. STEVAL-IFP029V1 evaluation board

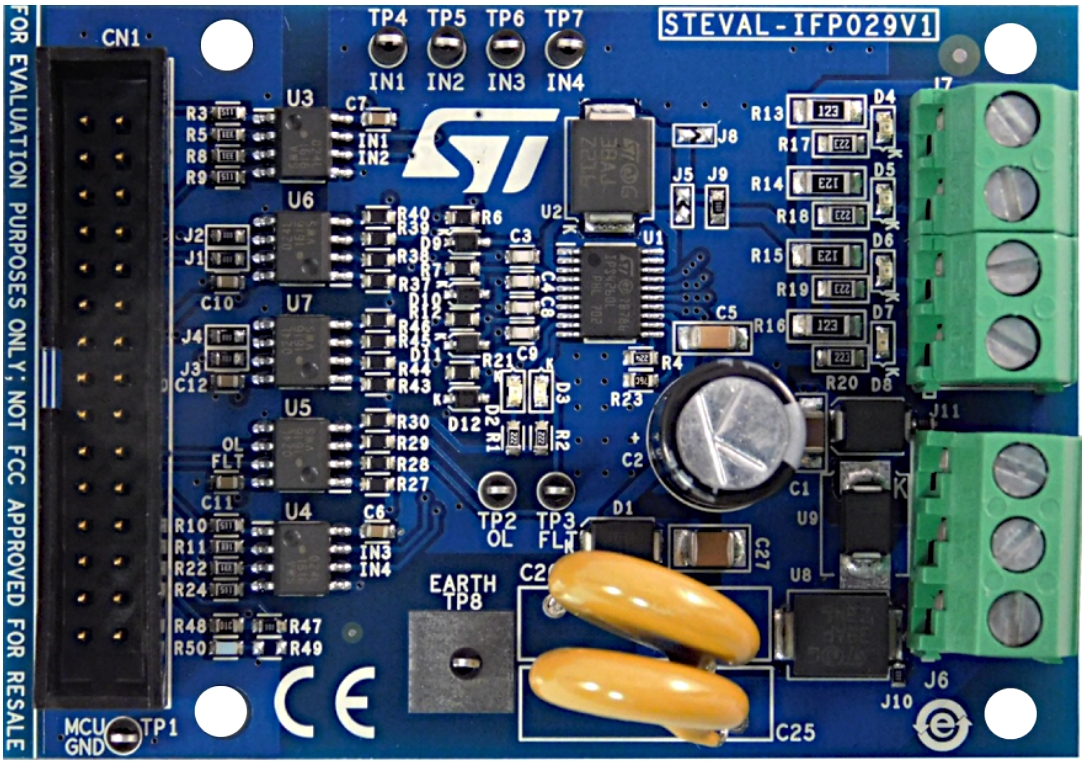

1.2 Features

- Dedicated voltage supply for logic (V_{DD}) and power (V_{CC}) stages
- V_{CC} operating voltage: 8 to 36 V
- V_{DD} operating voltage range: 3.3 to 5 V
- Default limitation current: 1 A per channel
- Default cut off delay time: 2 ms
- Maximum switching frequency: 250 kHz (see Table 4)
- High-speed opto-isolation for driving and feedback diagnostics
- Red LED for thermal and cut-off channel status signalization
- Red LED for open load detection in off-state

- Thermal shutdown
- Reverse polarity protection
- Designed to meet EMC standard requirements: IEC61000-4-2, IEC61000-4-4, IEC61000-4-5

1.3 Board description

1.3.1 Connectors, jumpers, and test points

Table 1. STEVAL-IFP029V1: connectors, jumpers, and test points

Name	Type	Function	Details
J6	3-way screw connector	V_{CC} and V_{DD} supply voltages	PIN1: V_{DD} PIN2: GND PIN3: V_{CC}
J7	4-way screw connector	Output connector	PIN1: OUT1 PIN2: OUT2 PIN3: OUT3 PIN4: OUT4
CN1	30-pin flat connector	Connection for STEVAL-PCC009V2	See table below
J1, J2, J3, J4	Drop jumpers	When closed, they enable the transmission of the INx status to CN1 (fault CH1, fault CH2, fault CH3, fault CH4).	Default: J1 closed J2 closed J3 closed J4 closed
J5, J8, J9	Drop jumpers	The default condition enables U2 between V_Z and V_{CC}. U2 is the TVS that protects the output pins despite the surge is up to ±2 kV. Moreover, it allows increasing the maximum inductive load capability.	Default: J5 open J8 open J9 closed
J10	Drop jumper	If closed, it enables U8, the TVS that protects V_{CC} despite the surge is up to ±2 kV.	Default closed
J11	Drop jumper	Disconnect V_{DD} path.	Default closed
TP1	Test point	Logic stage GND	MCU_GND
TP2	Test point	IPS4260L, $\overline{OL}$ pin	Active low
TP3	Test point	IPS4260L, $\overline{FLT}$ pin	Active low
TP4, TP5, TP6, TP7	Test point	IPS4260L IN1, IN2, IN3, IN4 pins	-

Table 2. STEVAL-IFP029V1: 30-pin signal connectors

Pin number	Description
1	NC
2	MCU_GND
3, 4, 5, 6	NC
8	Digital input IN1/PWM1
7	Digital input IN2/PWM1
9, 10, 11, 12	NC

Pin number	Description
13	MCU_GND
14	MCU_VDD
15	Fault CH1
16	Fault CH2
17	Fault CH3
18	Fault CH4
19	Digital input IN3/PWM2
20	FAULT_FLT (global cut-off/thermal fault)
21	Digital input IN4/PWM2
22	FAULT_OL (global open load fault)
23	NC
24, 25	Digital acknowledge
26, 27	NC
28	MCU_GND
29, 30	NC

1.3.2 Supply voltage section

The STEVAL-IFP029V1 needs two different supply voltages for logic stage (V_{DD}) and power stage (V_{CC}).

The V_{DD} voltage supplies the optocouplers and pulls up the red LEDs (D2 and D3): the maximum admissible voltage is 5.5 V.

The V_{CC} voltage is between 8 and 36 V. You can extend the operating range to 50 V, disconnecting the TVS (U8) by opening J10, or replacing it with a proper one.

Important: *If you remove the TVS on V_{CC}, the surge protections are not guaranteed.*

1.3.3 Communication

The galvanic isolation between the logic stage and the power stage is ensured by the high-speed dual-channel optocouplers (U3, U4, U5, U6, and U7).

U3 and U4 handle the driving signals (from the microcontroller to the IPS4260L).

U5, U6, and U7 handle the feedback signals (from the IPS4260L to the microcontroller).

When using the GUI and the STEVAL-PCC009V2, you can select two different modes on the basis of the test you want to perform:

1. simple on/off mode;
2. PWM mode.

In PWM mode, you can set channel frequency and duty cycle and activate or deactivate PWM mode for each channel.

1.3.4 Reverse polarity

The reverse polarity event occurs if you supply the evaluation board after wrongly swapping the supply cable polarity.

D1 protects the evaluation board against this event. D1 is placed in series in the V_{CC} rail. It prevents a huge current to start flowing through the IPS4260L, damaging the device.

D8 implements reverse polarity protection on V_{DD} as well.

1.3.5 Open load detection

The IPS4260L embeds the open load in the off-state detection feature. Thanks to this feature, during off-state (input low), it is possible to detect whether the load is disconnected or not. The OL fault pin signals this detection through the STEVAL-IFP029V1 D2 LED, which turns on.

To use this feature, a pull-down network (R17, R18, R19, and R20) is connected on the output pins to make the output pin voltage go lower than V_{CC} (-3.5 V typically) when the load is disconnected.

2 Power dissipation

The IC is self-protected against overheating by thermal junction protection. The exposed pad of the IC is soldered to the copper areas on top and bottom sides (connected through vias) allowing proper heatsink capability.

Caution: When using the board in PWM mode, with a high switching frequency, the power dissipation increases proportionally to the load current, switching frequency, and number of channels used.

At high frequency, a considerable power dissipation capability is necessary to prevent the junction temperature increase up to a regime value that exceeds the device thermal shutdown. When this occurs, the device stops switching until the temperature decreases to the restart value.

The following table summarizes the STEVAL-IFP029V1 power dissipation performance at T_{amb} = 25°C. It describes how many channels can simultaneous support PWM switching at the maximum frequency with 50% duty cycle at different load-current levels. We took into account four levels: 500, 1000, 1500, and 2000 mA.

Table 3. STEVAL-IFP029V1 max. switching frequency vs. number of active channels and I_{LOAD} at T_{amb} = 25°C

Duty cycle 50%		
I_{LOAD} [mA]	Number channels	Max. PWM frequency [kHz]
500	1	>250
	2	200
	3	140
	4	100
1000	1	230
	2	100
	3	60
	4	40
1500	1	150
	2	30
	3	10
2000	1	110

3 EMC robustness

EMC robustness has been taken into account using different approaches for the supply voltage line and output lines.

Regarding the power stage rail, the on-board TVS (U8) is used between V_{CC} and ground to clamp the overvoltage in case of surge discharge.

Moreover, the other TVS (U2) between V_Z pins and V_{CC} rail protects the output pins from surge pulse.

The third TVS (U9) is necessary to protect the board components against surge pulse on V_{DD}.

4 GUI interface

The STSW-IFP029GUI is a graphic user interface that allows you to control easily the STEVAL-IFP029V1 through the STEVAL-PCC009V2 (sold separately).

You can install the STSW-IFP029GUI on a Windows PC or laptop.

After the GUI installation, follow the procedure below:

- connect your PC or laptop to the STEVAL-PCC009V2 through a mini-USB cable
- connect the STEVAL-PCC009V2 to the STEVAL-IFP029V1 through a 30-pin flat cable
- launch the GUI and wait for the following window to appear:

Figure 2. Board identification

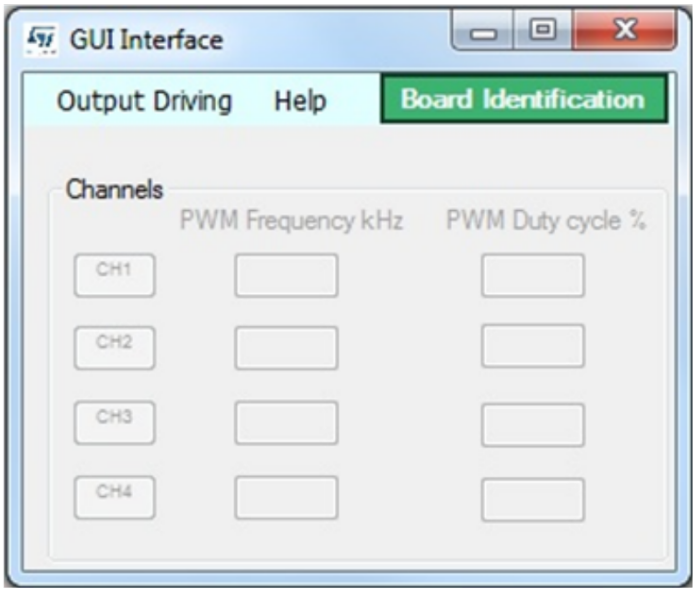

- click on [**Board identification**] to make the GUI automatically recognize the STEVAL-IFP029V1

Figure 3. STEVAL-IFP029V1 identification

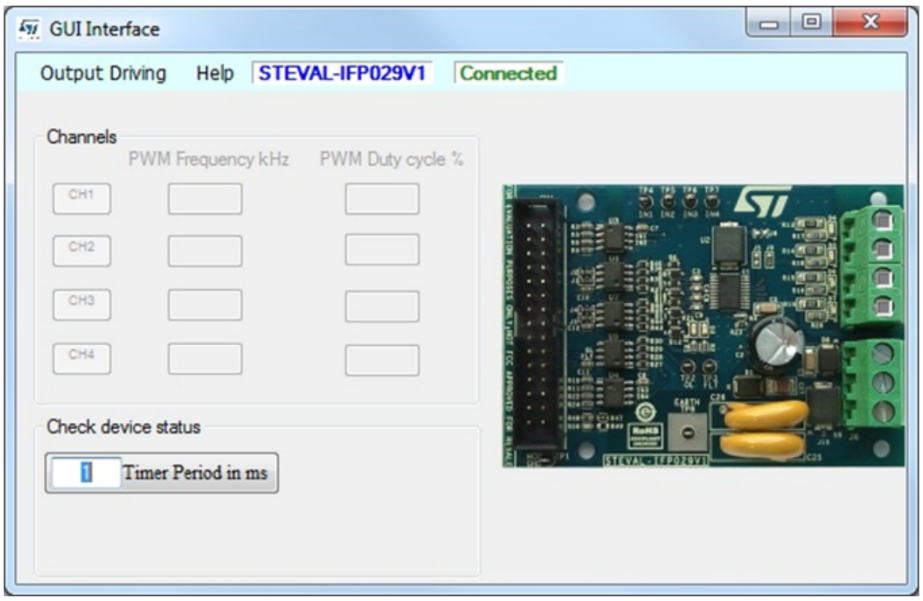

- click on [**Output Driving**] to select the driving mode:
  1. steady-state: to drive the output on or off
  2. PWM: frequency and duty cycle can be configured while the output can be driven to PWM mode. The values edited in the frequency and duty cycle fields are active after clicking on the left buttons of the GUI (CH_1, CH_2, CH_3, CH_4). If a channel is activated, a green box is shown on the picture of the STEVAL-IFP029V1 in line with the activated channel.

Figure 4. PWM driving mode

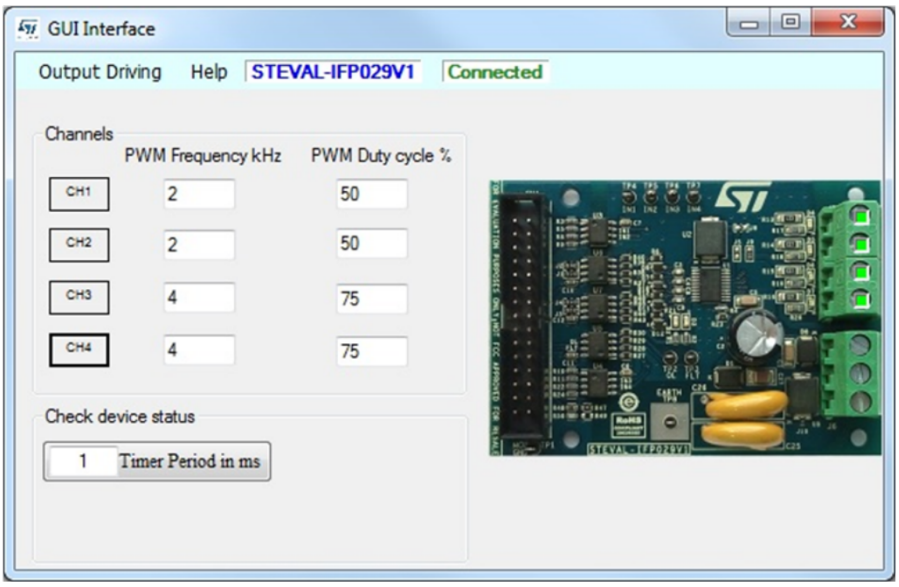

Note: PWM driving has been implemented using two timers (PWM1 and PWM2) of the microcontroller. The former is used to drive IPS4260L output1 and output2; the latter is used to drive IPS4260L output3 and output4. With this implementation, you can select different duty cycles for all outputs, but you have to use the same frequency to drive outpu1 and output 2; the same limitation occurs for the frequency set to drive output3 and output4.

The GUI also reports the status of the IPS4260L FLT (collective failure) and OL (open load) pins. Two small rectangular boxes change color according to the activation (green) or deactivation (red) of the related open-drain. The chip status is periodically checked with a time period (in ms) defined in the [**Timer Period**] text field.

Figure 5. **Collective failure or open load pins**

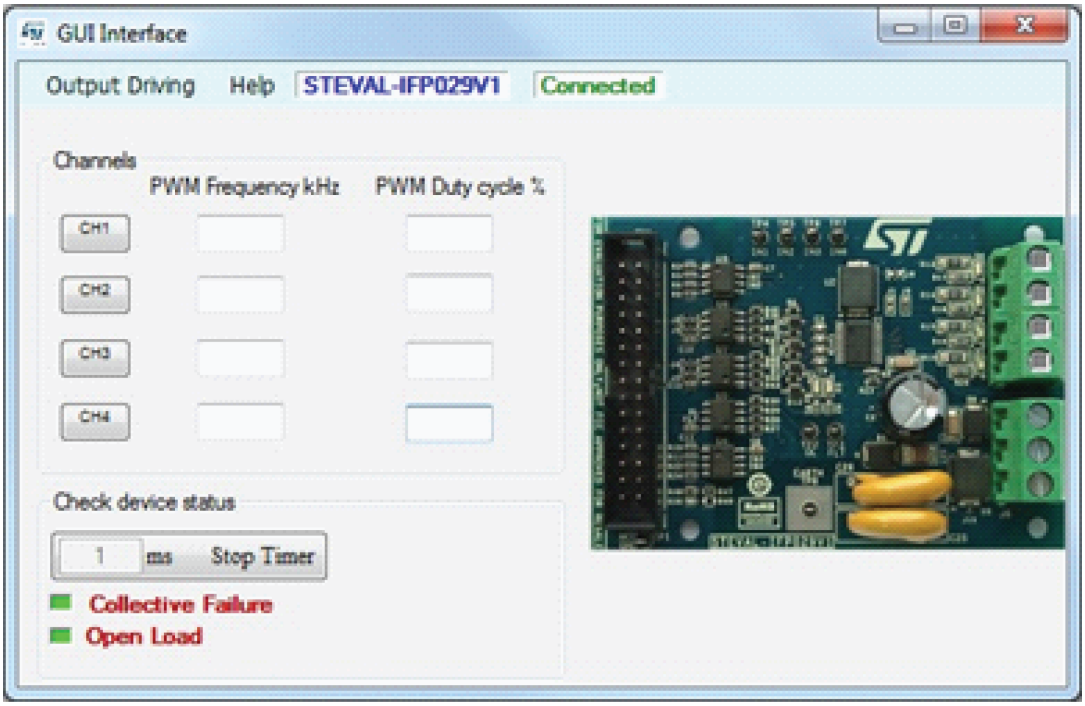

After completing the test:

- disconnect the power supply from the STEVAL-IFP029V1
- click on [**Output Driving**]>[**Disconnect**]
- disconnect the USB cable
- close the GUI

5 Board layout

The two-layer design allows proper heat-sinking capability and noise immunity.

Figure 6. **STEVAL-IFP029V1 component placement**

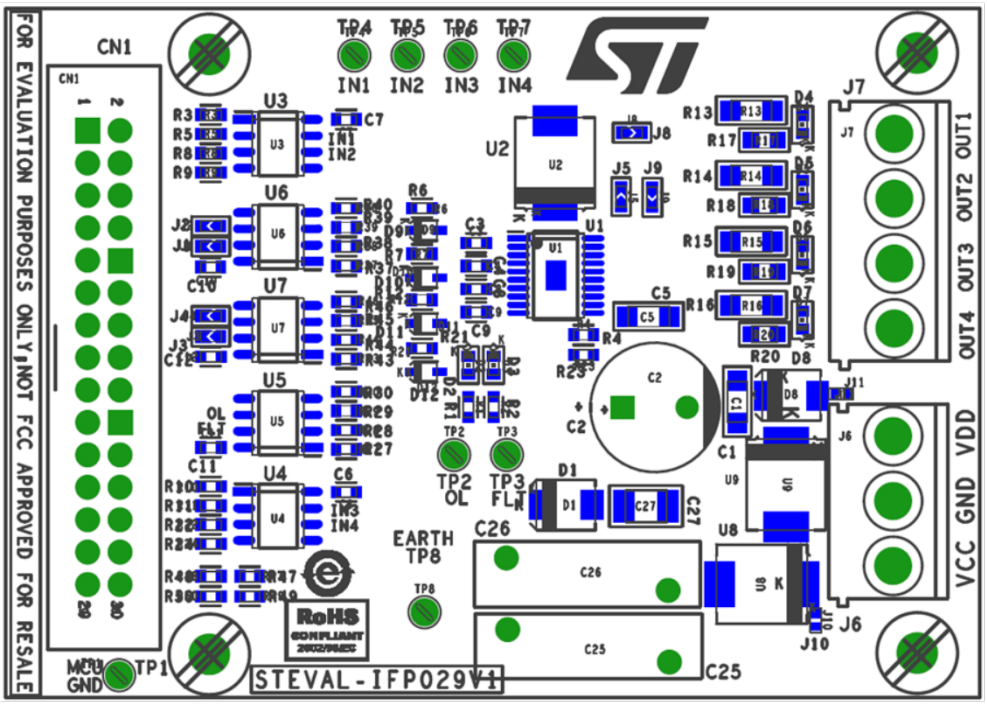

Figure 7. **STEVAL-IFP029V1 layout (top side)**

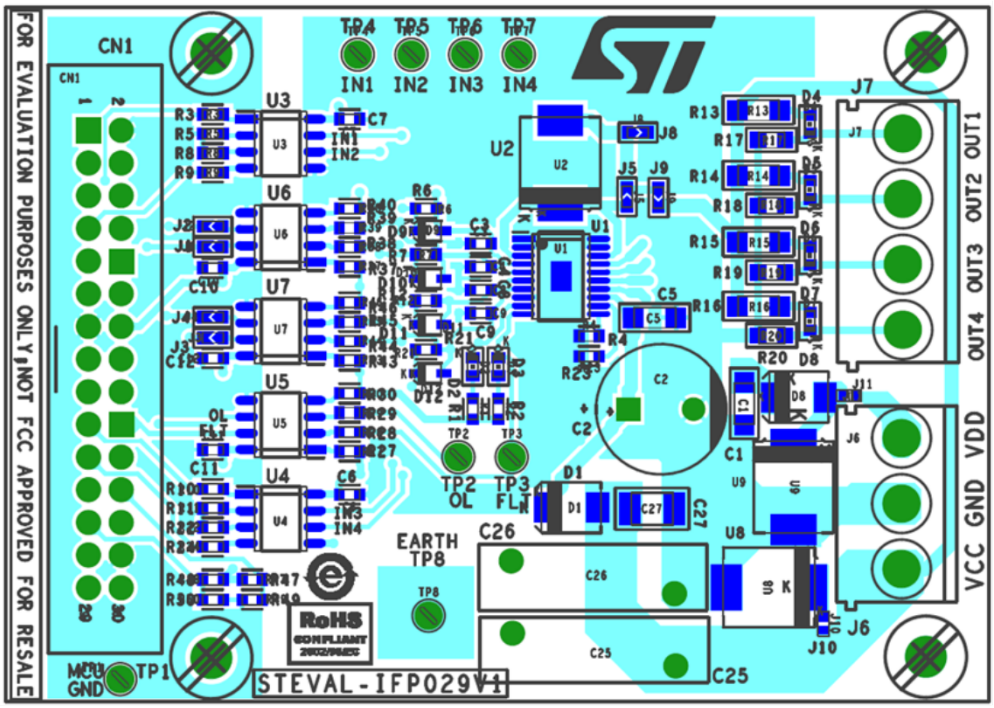

Figure 8. STEVAL-IFP029V1 layout (bottom side)

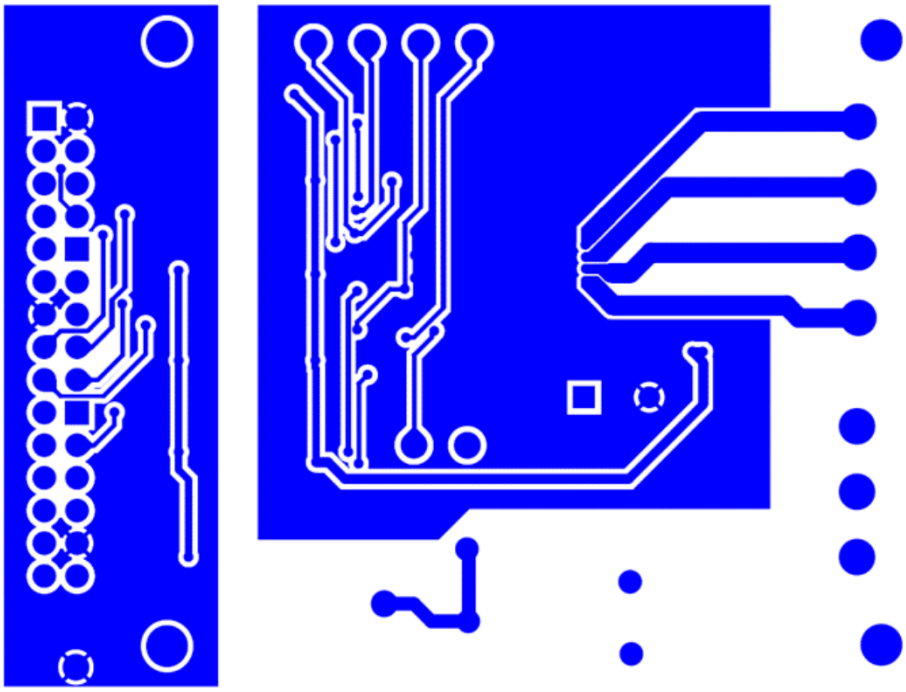

6 Schematic diagram

Figure 9. STEVAL-IFP029V1 circuit schematic

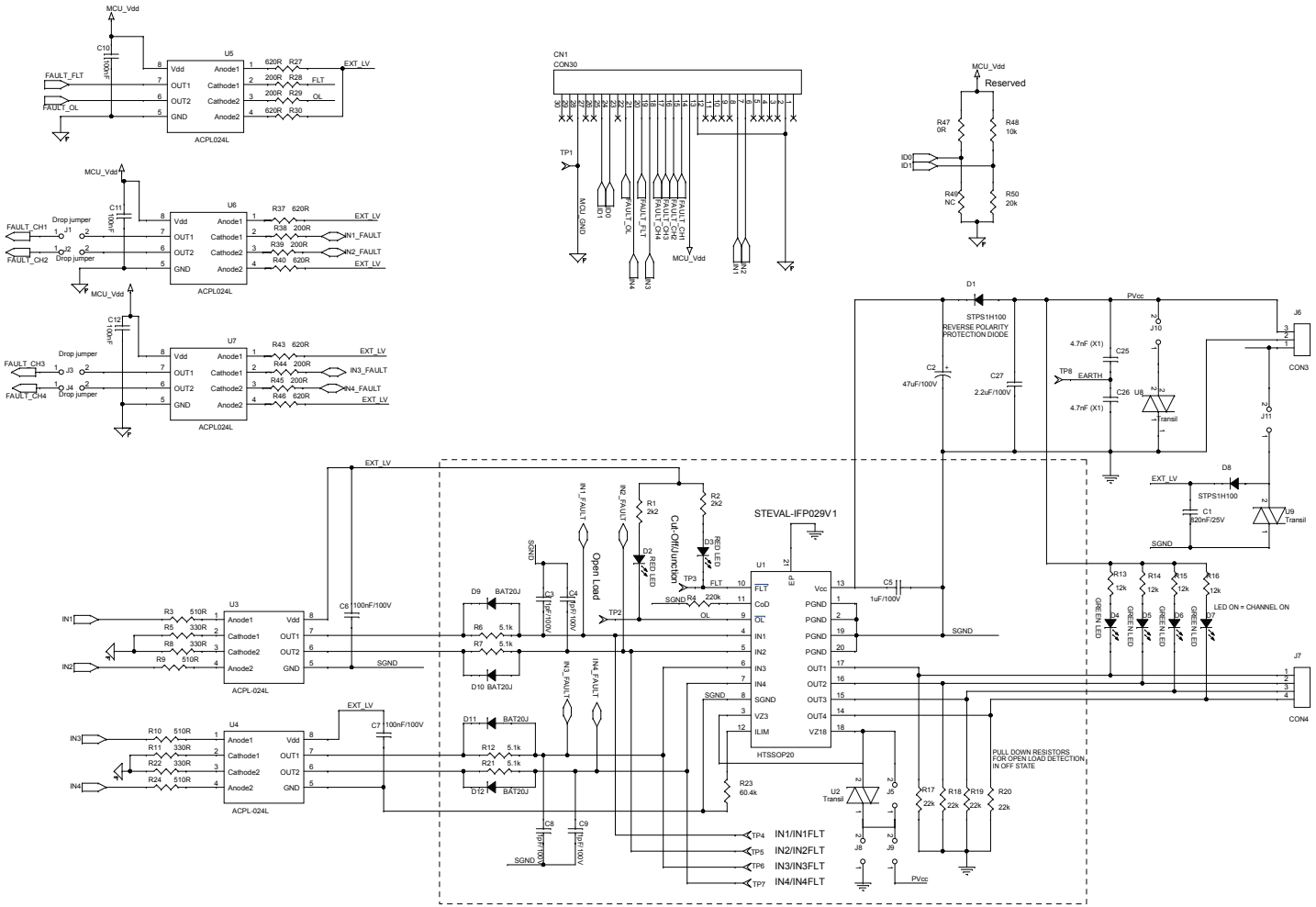

7 Bill of materials

Table 4. **STEVAL-IFP029V1 bill of materials**

Item	Q.ty	Ref.	Part/Value	Description	Manufacturer	Order code
1	1	CN1	CON30 2.54 mm 30 pins (15x2 rows)	Connector	FCI	52601-S30-4LF
2	1	C1	820 nF 25 V ±10%	Capacitor X7R	AVX	12063C824KAT2A
3	1	C2	47 µF 100 V ±20%	Electrolytic capacitor	Rubycon	100ZL47MEFC10X12.5
4	4	C3, C4, C8, C9	1 pF 100 V ±25%	Capacitors COG	MURATA	GQM1885C2A1R0CB01D
8	1	C5	1 µF 100 V ±10%	Capacitor X7R	AVX	12061C105KAT2A
9	5	C6, C7, C10, C11, C12	100 nF 100 V ±10%	Capacitors X7R	MURATA	GRM188R72A104KA35D
14	2	C25, C26	4.7 nF 4 kV	Ceramic X1 class suppressor	VISHAY	VY1472M63Y5UG63V0
16	2	D1, D8	STPS1H100U	100 V, 1 A power Schottky rectifier	ST	STPS1H100U
18	2	D2, D3	Red, 2.4 V	LEDs	WURTH	150060SS75000
20	4	D4,D5,D6,D7	Green, 2.4 V	LEDs	WURTH	150060VS75000
24	4	D9, D10, D11, D12	BAT20J VRRM =20 V VF = 0.25 V	23 V, 1 A general purpose signal Schottky diode	ST	BAT20JFILM
28	4	J1, J2, J3, J4	-	Drop jumpers	Any	Any
32	5	J5, J8, J9, J10, J11	-	Jumpers	Any	Any
36	2	R1, R2	2k2 0.1 W 0.1%	Resistors	PANASONIC	ERA3AEB222V
41	4	R3, R9, R10, R24	510R 0.1 W ±0.1%	Resistors	PANASONIC	ERA3APB511P
43	4	R5, R8, R11, R22	330R 0.1 W ±0.1%	Resistors	PANASONIC	ERA3AEB331V
47	1	R4	220 k 0.1 W ±0.1%	Resistor	PANASONIC	ERA3AEB224V
51	1	R23	60.4 k 0.125 W ±0.1%	Resistor	TE CONN	RP73PF1J60K4BTDF
52	4	R17, R18, R19, R20	22 k 0.125 W ±0.1%	Resistors	Arcol	ACPP080522KBE
53	4	R6, R7, R12, R21	5 k1 0.25 W ±1%	Resistors	PANASONIC	ERJPA3F5101V
57	4	R13, R14, R15, R16	12 k 0.25 W ±0.1%	Resistors	PANASONIC	ERA8AEB123P
61	6	R27, R30, R37, R40, R43, R46	620R 0.25 W ±1%	Resistors	PANASONIC	ERJPA3F6200V
65	6	R28, R29, R38, R39, R44, R45	200R 0.25 W ±1%	Resistors	PANASONIC	ERJPA3F2000V
71	1	R47	0 0.1 W ±5%	Resistor	YAGEO	232270296001
77	1	R48	10 k 0.1 W ±0.1%	Resistor	BOURNS	CRT0603-BY-1002ELF
78	0	R49 (DNM)	-	Resistor	-	-
79	1	R50	20 k 0.1 W ±0.1%	Resistor	VISHAY	MCT06030D2002BP100
79	8	TP1, TP2, TP3, TP4, TP5, TP6, TP7, TP8	-	Ring test points	KEYSTONE	5001
80	5	U3, U4, U5, U6, U7	OPTO_5 MHz ACPL-024L	Optocouplers	Avago Technologies	ACPL-024L-000E
88	2	J7	4-way	Screw connector	TE CONN	282836-4

Item	Q.ty	Ref.	Part/Value	Description	Manufacturer	Order code
93	1	J6	3-way	Screw connector	RS	790-1174
95	1	U1	IPS4260L	Quad low-side intelligent power switch	ST	IPS4260L
96	1	U8	SMC30J33CA 3 kW	3000 W, 33 V TVS in SMC	ST	SMC30J33CA
97	1	U2	SMC30J18CA 3 kW	3000 W, 18 V TVS in SMC	ST	SMC30J18CA
98	1	C27	2u2F 100 V	X7R	MURATA	GRM32ER72A225KA35L
99	1	U9	SM6T6V8CA 600 V	600 W, 5.8 V TVS in SMB	ST	SM6T6V8CA

8 References

- IPS4260L datasheet
- IEC61000-4-4 European standard
- IEC61000-4-5 European standard
- IEC61000-4-2 European standard
- UM0935: "STEVAL-PCC009V2, IBU universal interface based on the STM32F103RB"

Revision history

Table 5. Document revision history

Date	Revision	Changes
05-Oct-2017	1	Initial release.
02-Dec-2021	2	Updated Introduction. Text and formatting changes throughout the document.

Contents

1 Getting started 2
1.1 Overview 2
1.2 Features 2
1.3 Board description 3
1.3.1 Connectors, jumpers, and test points 3
1.3.2 Supply voltage section 4
1.3.3 Communication 4
1.3.4 Reverse polarity 4
1.3.5 Open load detection 4
2 Power dissipation 6
3 EMC robustness 7
4 GUI interface 8
5 Board layout 11
6 Schematic diagram 13
7 Bill of materials 14
8 References 16
Revision history 17
List of tables 19
List of figures 20

List of tables

Table 1. STEVAL-IFP029V1: connectors, jumpers, and test points . . . 3
Table 2. STEVAL-IFP029V1: 30-pin signal connectors . . . 3
Table 3. STEVAL-IFP029V1 max. switching frequency vs. number of active channels and I_{LOAD} at T_{amb} = 25°C . . . 6
Table 4. STEVAL-IFP029V1 bill of materials . . . 14
Table 5. Document revision history . . . 17

List of figures

Figure 1. STEVAL-IFP029V1 evaluation board . . . 2
Figure 2. Board identification . . . 8
Figure 3. STEVAL-IFP029V1 identification . . . 8
Figure 4. PWM driving mode . . . 9
Figure 5. Collective failure or open load pins . . . 10
Figure 6. STEVAL-IFP029V1 component placement . . . 11
Figure 7. STEVAL-IFP029V1 layout (top side) . . . 11
Figure 8. STEVAL-IFP029V1 layout (bottom side) . . . 12
Figure 9. STEVAL-IFP029V1 circuit schematic . . . 13

IMPORTANT NOTICE – PLEASE READ CAREFULLY

STMicroelectronics NV and its subsidiaries (“ST”) reserve the right to make changes, corrections, enhancements, modifications, and improvements to ST products and/or to this document at any time without notice. Purchasers should obtain the latest relevant information on ST products before placing orders. ST products are sold pursuant to ST’s terms and conditions of sale in place at the time of order acknowledgement.

Purchasers are solely responsible for the choice, selection, and use of ST products and ST assumes no liability for application assistance or the design of Purchasers’ products.

No license, express or implied, to any intellectual property right is granted by ST herein.

Resale of ST products with provisions different from the information set forth herein shall void any warranty granted by ST for such product.

ST and the ST logo are trademarks of ST. For additional information about ST trademarks, please refer to www.st.com/trademarks. All other product or service names are the property of their respective owners.

Information in this document supersedes and replaces information previously supplied in any prior versions of this document.

© 2021 STMicroelectronics – All rights reserved