2.5 W wireless charger transmitter evaluation board hardware updates

Introduction

The STEVAL-ISB045V1 evaluation kit includes the STEVAL-ISB045V1T wireless battery charger transmitter evaluation board based on the STWBC-WA digital controller, firmware and the STEVAL-WBCDNGV1 USB-to-UART dongle needed to use the STSW-STWBCGUI.

To improve the board performance, we recommend to apply some changes to the STEVAL-ISB045V1 evaluation kit: replace the PMOS transistor on the bridge circuit, improve conducted EMI behavior on DC port and substitute some capacitors on the bridge circuit.

Figure 1. STEVAL-ISB045V1 evaluation board

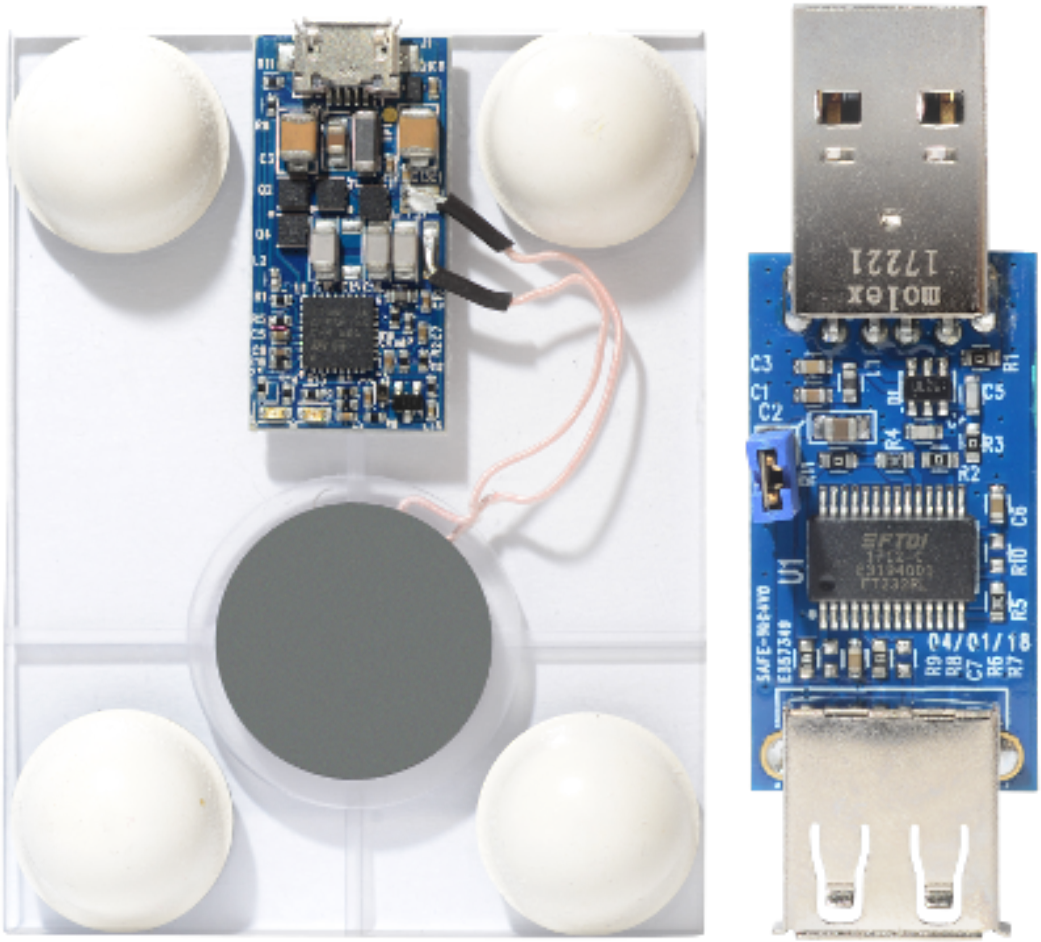

1 PMOS replacement

The STEVAL-ISB045V1 evaluation board is based on the STL4P2UH7 device.

We recommend to replace the device by the new STL4P3LLH6 with the same PowerFLAT 2x2 package and same footprint.

Figure 2. STL4P3LLH6 package and footprint

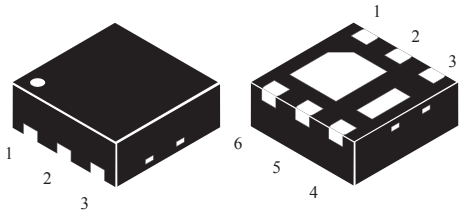

PowerFLAT™ 2x2

Figure 3. STL4P3LLH6 internal schematic diagram

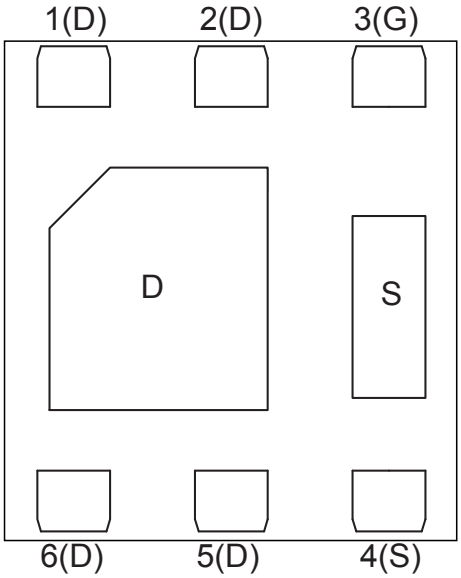

Table 1. STL4P3LLH6 main electrical characteristics compared to STL4P2UH7

Parameter	STL4P2UH7	STL4P3LLH6
VDS	20 V	30 V
ID	4 A	4 A
$VGS_{(th)}$	0.4~1 V	1~2.5 V
$RDS_{(on)}$	0.1 Ω at 4.5 V	0.075 Ω at 4.5 V
C_{iss}	510 PF at VDS 10 V	639 PF at VDS 25 V
C_{oss}	66 PF at VDS 10 V	79 PF at VDS 25 V
Q_g	4.8 nc	6 nc

Performed analysis showed no impact in replacing the old PMOS reference with the new one.

The non-regression tests covered:

- behavior of the wireless charging system with various loads applied to the STEVAL-ISB043V1 2.5 W Rx output
- efficiency from no load to 2.5 W load
- behavior at different temperature
- behavior at low V_{in} to double check the $VGS_{(th)}$

Figure 4. STEVAL-ISB045V1 schematic diagram with new PMOS STL4P3LLH6

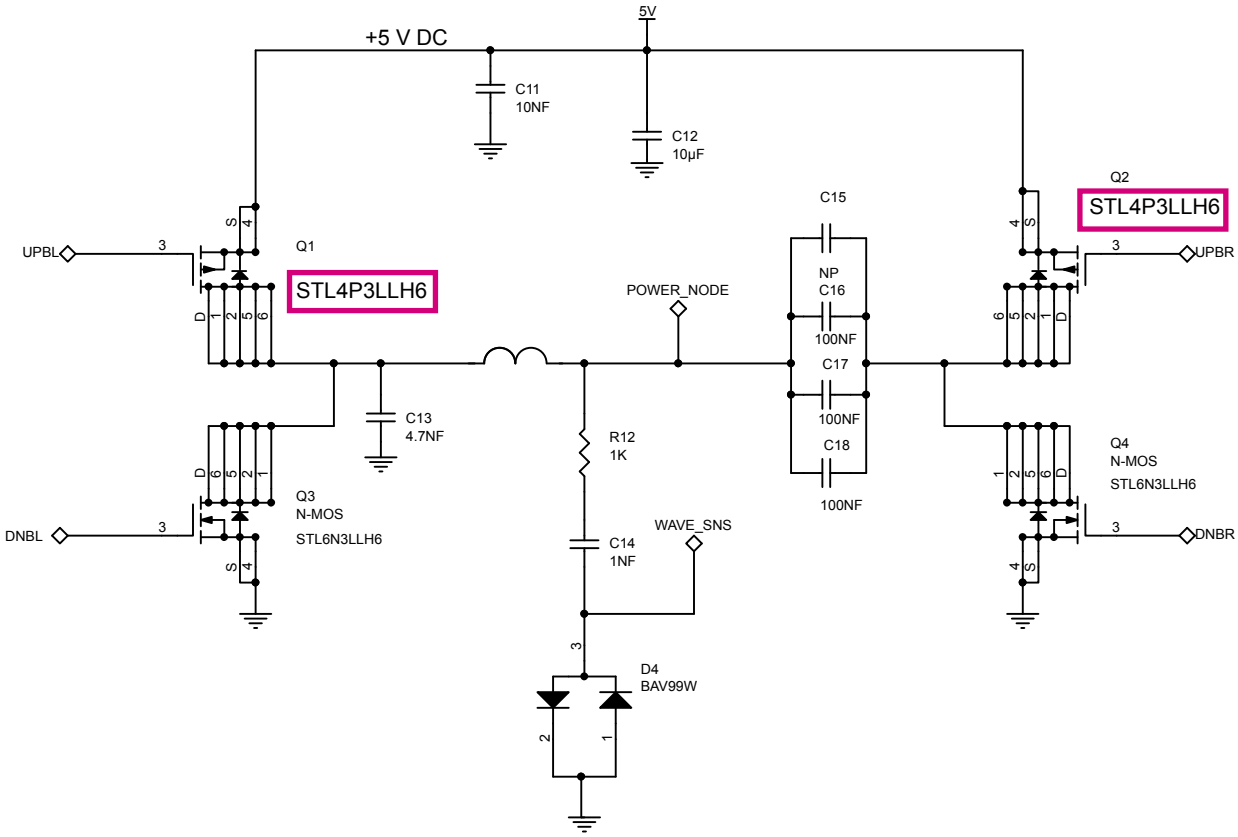

2 EMI improvements

The goal of the recommended modifications is to improve the conducted EMI behavior on the STEVAL-ISB045V1 DC port.

Low profile component impact has been tested on EMI and overall system performance.

Table 2. STEVAL-ISB045V1T bill of materials: EMI original parts

Item	Q.ty	Ref.	Part/Value	Description	Manufacturer	Order code
1	2	C1, C3	47 µF 16 V ±20% 1210	Ceramic capacitors	Murata	GRM32ER61C476ME15
16	1	L1	180R 3 A ±25% 1806	Ferrite	Murata	BLM41PG181SN1

Table 3. STEVAL-ISB045V1T bill of materials: EMI space optimized parts

Item	Q.ty	Ref.	Part/Value	Description	Manufacturer	Order code
1	2	C1, C3	22 µF 10 V 0.9 mm max. 0603 X5R	Ceramic capacitors	Murata	GRM188R61A226ME15
16	1	L1	180 R 3 A ±25% 1806	Ferrite	Murata	BLM18SG221TN1
						NFZ2MSM181SN10
			2.2 µH 1.5 A inductor - 1008 1 mm		Wurth Elektronik	74479787222

Figure 5. **STEVAL-ISB045V1 top reference designators: highlighted EMI changes**

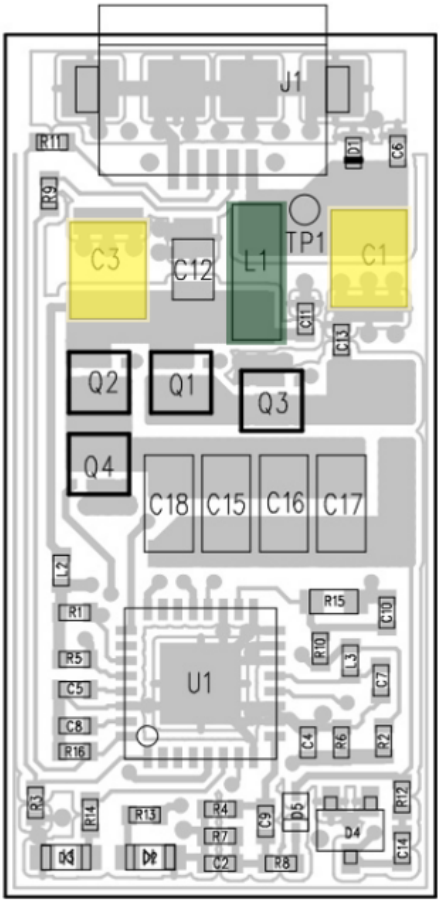

Figure 6. **STEVAL-ISB045V1 schematic diagram: highlighted EMI changes**

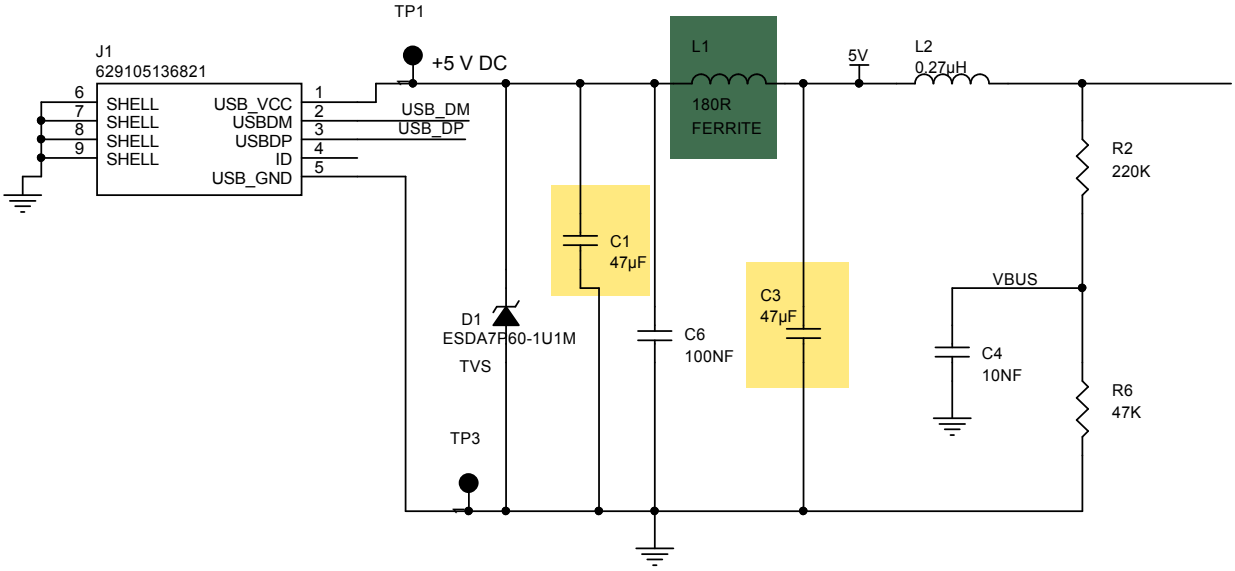

2.1 Specifications

According to EN55011 -2015 specification, the STEVAL-ISB045V1 can be considered to belong to Group2, Class B, as equipment intended primarily for use in a residential environment.

For this class and group of products, conducted emissions are defined on AC port only (in this case, the AC USB adapter used to supply the STEVAL-ISB045V1).

Since the AC/DC power supply is not part of the design and can be any, we consider:

- the AC/DC is not filtering conducted emissions
- the limits of Class B, Group1/2 of conducted emission on AC port
- the same LISN as specified in 55011

Table 4. AC port conducted emissions

Frequency	Group 1				Group 2			
	Class A		Class B		Class A		Class B	
	Quasi-Peak	Average	Quasi-Peak	Average	Quasi-Peak	Average	Quasi-Peak	Average
MHz	dBuV	dBuV	dBuV	dBuV	dBuV	dBuV	dBuV	dBuV
0.15-0.5	79	66	66-56(1)	56-46(1)	100	90	66-56(1)	56-46(1)
0.5-5	73	60	56	46	86	76	56	46
5.0-30	73	60	60	50	90-73(1)	80-60(1)	60	50

1. *Decreasing linearly with logarithm of frequency.*

Table 5. DC port conducted emissions

Group 1					
Class A			Class B		
Frequency	Quasi-Peak	Average	Frequency	Quasi-Peak	Average
MHz	dBuV	dBuV	MHz	dBuV	dBuV
0.15	97	84	0.15-0.5	84-74(1)	74-64(1)
5	89	76	0.5-30	74	64
30	89	76			

1. *Decreasing linearly with logarithm of frequency*

Figure 7. Conducted emissions: impendance vs. frequency

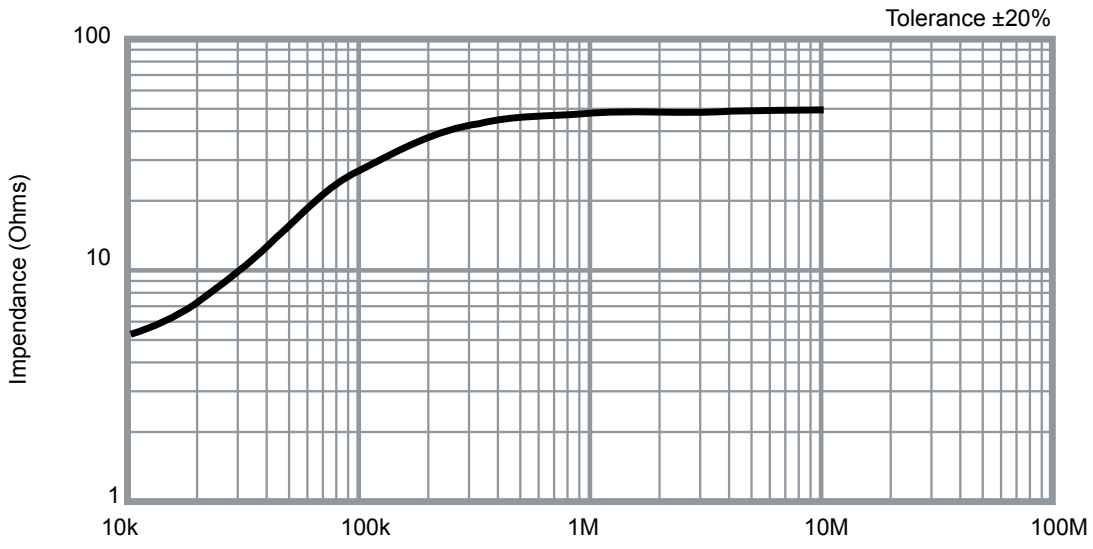

Figure 8. **Conducted emissions: power source and EUT**

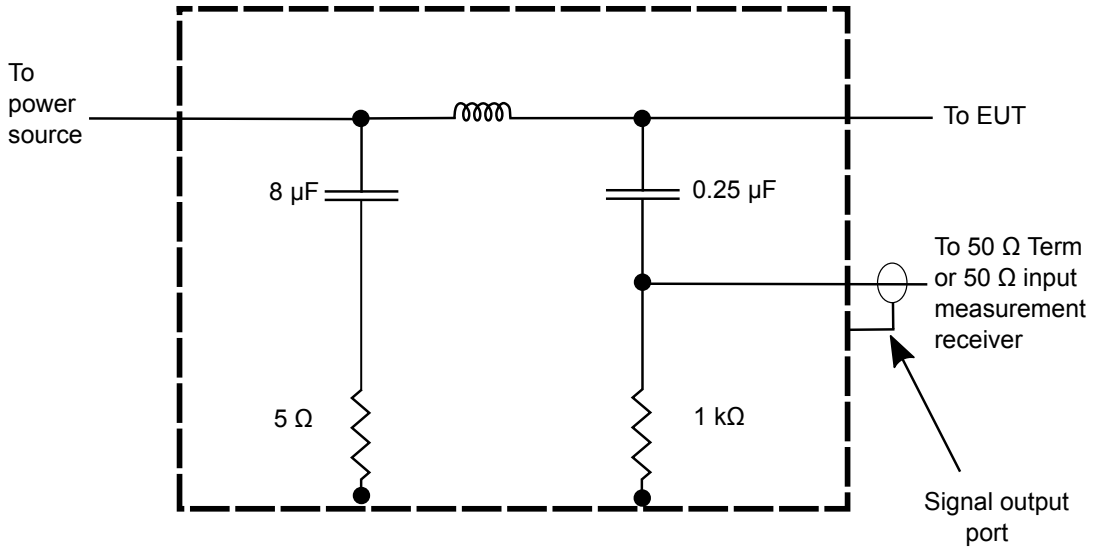

2.2 Test results

Four tests have been performed by replacing or removing hardware components on the STEVAL-ISB045V1:

1. Substitution of C1 capacitor (47 nF, 16 V, 1210, order code GRM32ER61C476ME15 by Wurth Elektronik) with a smaller capacitor (22 µF, order code GRM188R61A226ME15D by Wurth Elektronik). The obtained conducted EMI was degraded, so this change is not recommended.
2. Replacement of C3 with the capacitor by Murata (order code GRM188R61A226ME15D). As there was no EMI degradation, the replacement is possible.
3. Removal of L1 ferrite with no EMI conducted emission degradation as there is no limit in high frequency in conducted EMI
4. Replacement of L1 ferrite with a 2.2 µH inductor by Wurth Elektronik (order code 74479787222) resulting in a positive effect on low frequency conducted EMI, with a very small package. This replacement is recommended in case you need an improvement on EMI in the low frequency range.

Table 6. **Conducted EMI test result summary**

Type	Default HW configuration	C3=22 µF (order code GRM188R61A226ME15D)	C1= 22 µF (order code GRM188R61A226ME15D) L1=2.2 µH/1.5 A inductor (order code 74479787222)
V_{BAT}	Fund: -15 dB margin→FAIL H3: -12 dB margin→FAIL H5: -5 dB margin→FAIL Medium frequency: 40 dBuV at 10 MHz, 20 dB margin→PASS	Fund: -4 dB margin→FAIL H2: 0 dB margin→PASS Medium frequency: 42 dBuV at 10 MHz, 18 dB margin→PASS	Fund: 15 dB margin→PASS H2: 10 dB margin→PASS Medium frequency: 38 dBuV at 10 MHz, 22 dB margin→PASS
GND	Fund: -20dB margin→FAIL H3: 2dB margin→PASS Medium frequency: 40 dBuV at 10 MHz, 20 dB margin→PASS	Fund: -8dB margin→FAIL H2: 0dB margin→PASS Medium frequency: 40 dBuV at 10 MHz, 20 dB margin→ PASS	Fund: 14 dB margin→PASS H2: 10 dB margin→PASS Medium frequency: 37 dBuV at 10 MHz, 23 dB margin→ PASS

Finally, the system overall performance has been tested with C3 and L1 changes and there was no impact on efficiency or behavior.

3 Bridge lower capacitor impact

Some applications may have physical constraints which require low rise components.

The goal of the analysis performed is to assess the impact on the overall performance when the original capacitors are replaced by components ~ 1 mm tall or lower.

Table 7. STEVAL-ISB045V1T bill of materials: bridge original parts

Item	Q.ty	Ref.	Part/Value	Description	Manufacturer	Order code
6	1	C12	10 µF 10 V ±1% 805	Ceramic capacitor	Murata	GRM21BR71A106KE51L
9	3	C16, C17, C18	100 NF 50 V ±5% 1206	Ceramic capacitors	Murata	GRM31C5C1H104JA01L

Table 8. STEVAL-ISB045V1T bill of materials: bridge space optimized parts

Item	Q.ty	Ref.	Part/Value	Description	Manufacturer	Order code
6	1	C12	10 µF 10 V X5R 0.95 mm 0603	Ceramic capacitor	Murata	GRM188R61A106KE69D
9	3	C16, C17, C18	100 nF 50 V ±10% 1206 X7R 0.88 mm max.	Ceramic capacitors	Kemet	C1206C104K5RACAUTO
			100 nF 50 V ±10% 1206 U2J 1.2 mm			C1206C104K5JACTU

Figure 9. STEVAL-ISB045V1 top reference designators: highlighted bridge changes

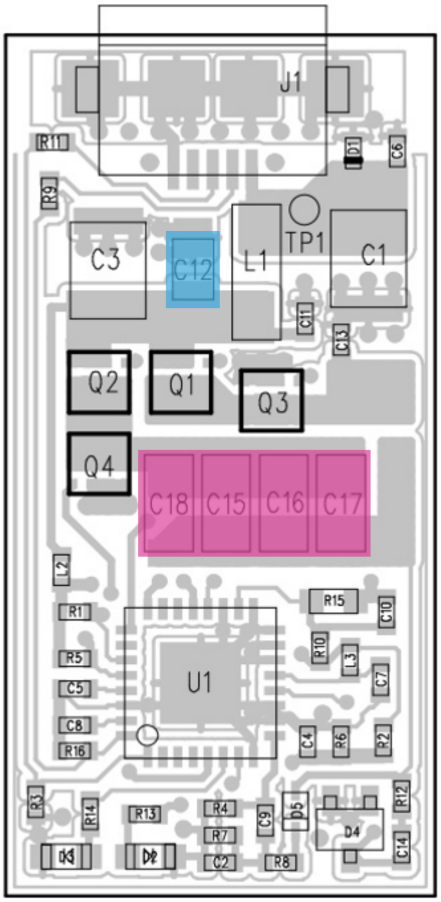

Figure 10. STEVAL-ISB045V1 schematic diagram: highlighted bridge changes

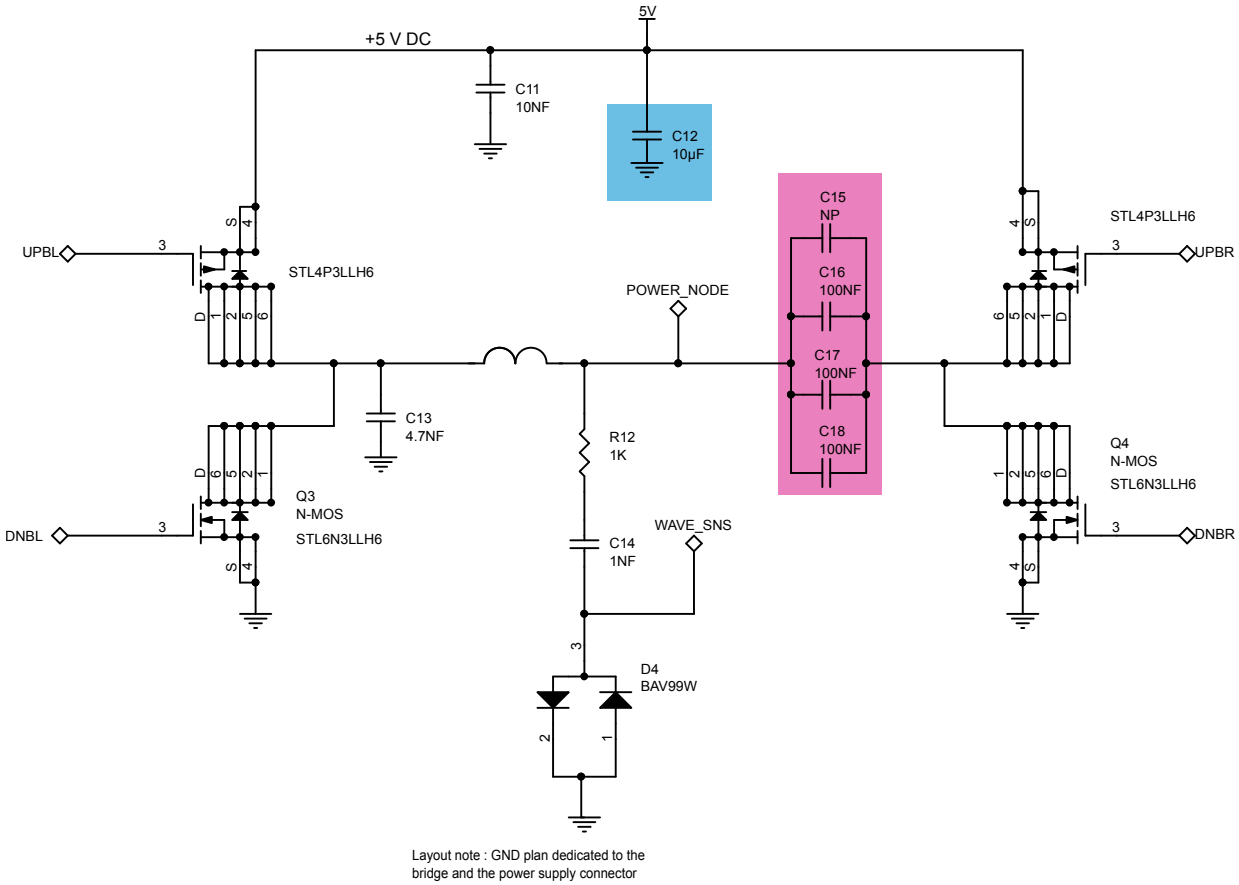

No difference has been noticed by replacing C12 with the capacitor by Murata (order code GRM188R61A106KE69D).

Figure 11. STEVAL-ISB045V1 new capacitor impact on efficiency

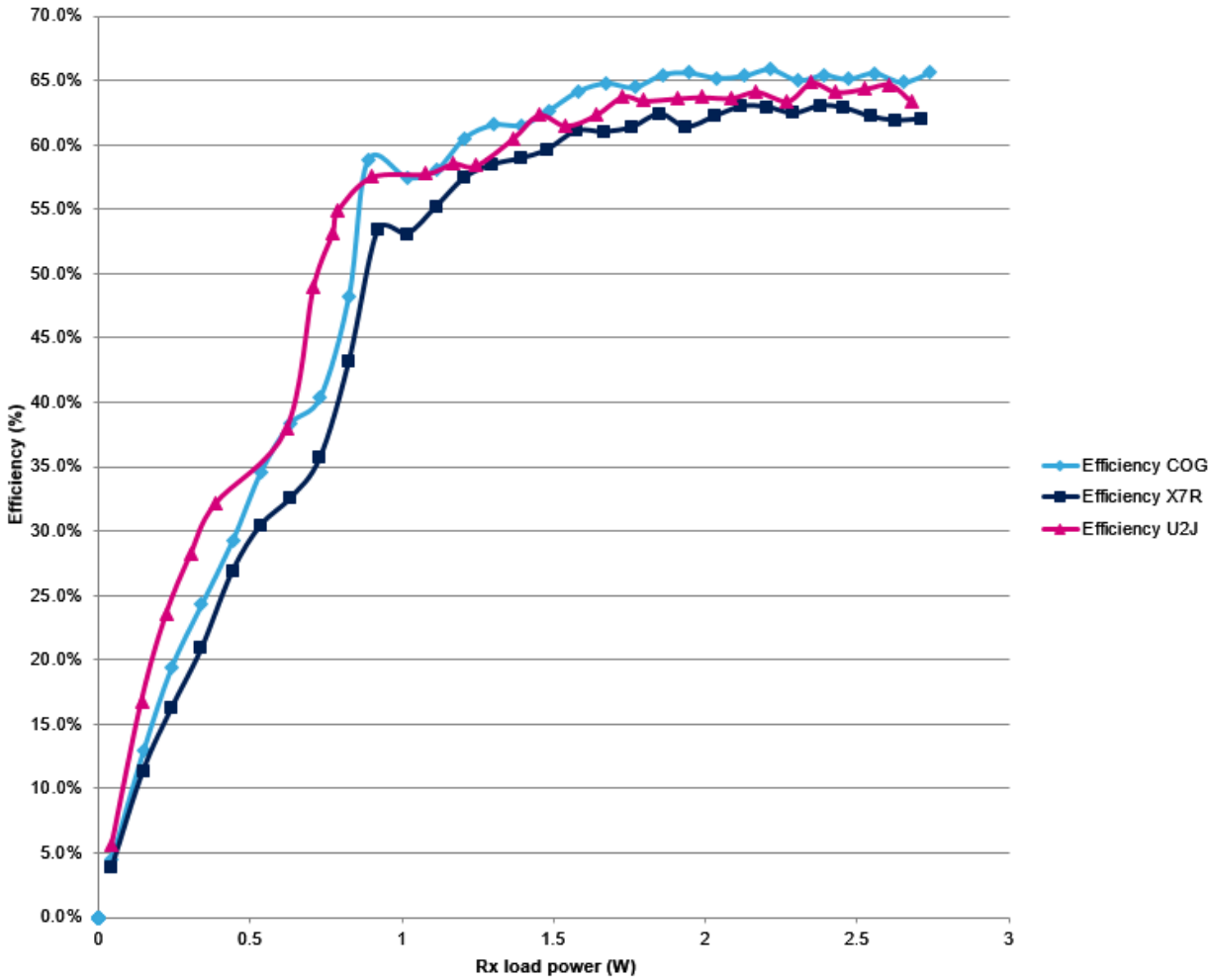

The maximum output power can be reached with all type of capacitors but capacitor technology could have an impact on the efficiency.

Important: *In case of issues related to efficiency measurements, you should check:*

- *the wireless power charging transmitter coil (value, technology, size)*
- *tank capacitor technology*
- *MOSFET choice (Rdson, Vgs, etc.)*
- *power supply quality*
- *Tx/Rx coupling quality (alignment, gap)*

4 Bill of materials after hardware changes

The STEVAL-ISB045V1T bill of materials has been modified according to the hardware changes related to the following references: C3, C12, C16, C17, C18, L1, Q1, Q2.

Important:
C3, C12, L1, Q1 and Q2 indicate hardware changes recommended, whereas C16, C17 and C18 indicate hardware changes not recommended as they have an impact on efficiency.

Table 9. STEVAL-ISB045V1T bill of materials

Item	Q.ty	Ref.	Part/Value	Description	Manufacturer	Order code
1	2	C1	47 µF 16 V ±20% 1210	Ceramic capacitors	Murata	GRM32ER61C476ME15
2	2	C2, C13	4.7 NF 50 V ±15% 402	Ceramic capacitors	Any	4.7NF_50V_X7R_0402
3	1	C3	22 µF 10 V ±20% 0603	Ceramic capacitors	Murata	GRM188R61A226ME15
4	4	C4, C9, C10, C11	10 NF 50 V ±15% 402	Ceramic capacitors	Any	10NF_50V_X7R_0402
5	3	C5, C6, C7	100 NF 50 V ±15% 402	Ceramic capacitors	Any	100NF_50V_X5R_0402
6	1	C8	1 µF 16 V ±1% 402	Ceramic capacitor	Any	1UF_16V_X5R_0402
7	1	C12	10 µF 10 V X5R 0.95 mm 0603	Ceramic capacitor	Murata	GRM188R61A106KE69D
8	1	C14	1 NF 50 V ±15% 402	Ceramic capacitor	Any	1NF_50V_X5R_0402
9	1	C15	NP 1206	Ceramic capacitor	Any	9C_NP_1206
10	3	C16, C17, C18	100 NF 50 V COG ±5% 1206	Ceramic capacitors	Murata	GRM31C5C1H104JA01L
11	1	D1	ESDA7P60-1U1M L1.55_W0.95_H0.53	High-power transient voltage suppressor (TVS)	ST	ESDA7P60-1U1M
12	1	D2	RED 603	LED	Wurth Elektronik	150060RS75000
13	1	D3	GREEN 603	LED	Wurth Elektronik	150060VS75000
14	1	D4	BAV99W SOT323	Diode	NXP	BAV99W
15	1	D5	BAS516 DIOD_SOD523	Diode	Any	BAS516
16	1	J1	629105136821	USB	Wurth Elektronik	629105136821
17	1	L1	2.2 µH 1.5 A inductor - 1008 1 mm	Ferrite	Wurth Elektronik	74479787222
18	1	L2	0.27 µH 0.11 A ±5% 402	Inductor	Taiyo Yuden	HK1005R27J-T
19	1	L3	1 K 0.2 A ±25% 402	Ferrite	Murata	BLM15AG102SN1D

Item	Q.ty	Ref.	Part/Value	Description	Manufacturer	Order code
20	4	M1, M2, M3, M4	SJ-5327 transparent	Spacer	3M	SJ-5327 (Transparent)
21	1	M5	SPACER_1MM_2.5W_WEARABLE	Spacer	Any	SPACER_1MM_2.5W_WEARABLE
22	1	M6	WGxxx_1xx	PCB	Any	PCB WG - 2 layers
23	1	M7	6.3 µH 2.5 A D55	Inductor	Wurth Elektronik	760 308 101 104
24	2	Q1, Q2	P-MOS L2_W2_H0.75	P-channel Power MOSFET	ST	STL4P3LLH6
25	2	Q3, Q4	N-MOS L2_W2_H0.75	N-channel 30 V, 0.021 Ohm typ., 6 A STripFET H6 Power MOSFET	ST	STL6N3LLH6
26	4	R1, R3, R7, R16	100 K 1/16 W ±5% 402	Resistors	Any	100K_5%_0402
27	1	R2	220 K 1/16 W ±1% 402	Resistor	Any	220K_1%_0402
28	1	R4	220 K 1/16 W ±5% 402	Resistor	Any	220K_5%_0402
29	1	R5	10 K 1/16 W ±5% 402	Resistor	Any	10K_5%_0402
30	1	R6	47 K 1/16 W ±1% 402	Resistor	Any	47K_1%_0402
31	1	R8	4.7 K 1/16 W ±5% 402	Resistor	Any	4.7K_5%_0402
32	2	R9, R11	0 R 1/16 W ±5% 402	Resistors	Any	0R_5%_0402
33	1	R10	180 K 1/16 W ±5% 402	Resistor	Any	180K_5%_0402
34	1	R12	1 K 1/16 W ±5% 402	Resistor	Any	1K_5%_0402
35	2	R13, R14	470 R 1/16 W ±5% 402	Resistors	Any	470R_5%_0402
36	1	R15	47 K 1/10 W ±5% 603	Resistor	Murata	NCP18WB473J03RB
37	6	TP1, TP2, TP3, TP4, TP5, TP6	TPSMD-1MM Test Point	Test point	Any	TPSMD-1MM
38	1	U1	STWBC-WA QFN32	Digital controller for wireless battery charger transmitters for wearable and smart watches applications	ST	STWBC-WA

Appendix A References

1. Datasheet (DS11797): "Digital controller for wireless battery charger transmitters for wearable and smartwatch applications" on www.st.com
2. Databrief (DB3531): "2.5 W wireless charger transmitter evaluation kit" on www.st.com
3. User manual (UM2367): "Getting started with the STEVAL-ISB045V1 2.5 W wireless charger transmitter evaluation kit" on www.st.com
4. EN55011 (EMC Standard)

Revision history

Table 10. **Document revision history**

Date	Version	Changes
02-Sep-2019	1	Initial release.

Contents

1 PMOS replacement 2
2 EMI improvements 4
2.1 Specifications 5
2.2 Test results 7
3 Bridge lower capacitor impact 8
4 Bill of materials after hardware changes 12
Appendix A References 14
Revision history 15

List of figures

Figure 1. STEVAL-ISB045V1 evaluation board . . . 1
Figure 2. STL4P3LLH6 package and footprint . . . 2
Figure 3. STL4P3LLH6 internal schematic diagram. . . . 2
Figure 4. STEVAL-ISB045V1 schematic diagram with new PMOS STL4P3LLH6 . . . 3
Figure 5. STEVAL-ISB045V1 top reference designators: highlighted EMI changes . . . 5
Figure 6. STEVAL-ISB045V1 schematic diagram: highlighted EMI changes . . . 5
Figure 7. Conducted emissions: impendance vs. frequency . . . 6
Figure 8. Conducted emissions: power source and EUT . . . 7
Figure 9. STEVAL-ISB045V1 top reference designators: highlighted bridge changes. . . . 9
Figure 10. STEVAL-ISB045V1 schematic diagram: highlighted bridge changes . . . 10
Figure 11. STEVAL-ISB045V1 new capacitor impact on efficiency . . . 11

List of tables

Table 1. STL4P3LLH6 main electrical characteristics compared to STL4P2UH7 . . . 2
Table 2. STEVAL-ISB045V1T bill of materials: EMI original parts . . . 4
Table 3. STEVAL-ISB045V1T bill of materials: EMI space optimized parts . . . 4
Table 4. AC port conducted emissions . . . 6
Table 5. DC port conducted emissions . . . 6
Table 6. Conducted EMI test result summary . . . 7
Table 7. STEVAL-ISB045V1T bill of materials: bridge original parts . . . 8
Table 8. STEVAL-ISB045V1T bill of materials: bridge space optimized parts . . . 8
Table 9. STEVAL-ISB045V1T bill of materials . . . 12
Table 10. Document revision history . . . 15

IMPORTANT NOTICE – PLEASE READ CAREFULLY

STMicroelectronics NV and its subsidiaries (“ST”) reserve the right to make changes, corrections, enhancements, modifications, and improvements to ST products and/or to this document at any time without notice. Purchasers should obtain the latest relevant information on ST products before placing orders. ST products are sold pursuant to ST’s terms and conditions of sale in place at the time of order acknowledgement.

Purchasers are solely responsible for the choice, selection, and use of ST products and ST assumes no liability for application assistance or the design of Purchasers’ products.

No license, express or implied, to any intellectual property right is granted by ST herein.

Resale of ST products with provisions different from the information set forth herein shall void any warranty granted by ST for such product.

ST and the ST logo are trademarks of ST. For additional information about ST trademarks, please refer to www.st.com/trademarks. All other product or service names are the property of their respective owners.

Information in this document supersedes and replaces information previously supplied in any prior versions of this document.

© 2019 STMicroelectronics – All rights reserved