Circuit schematic

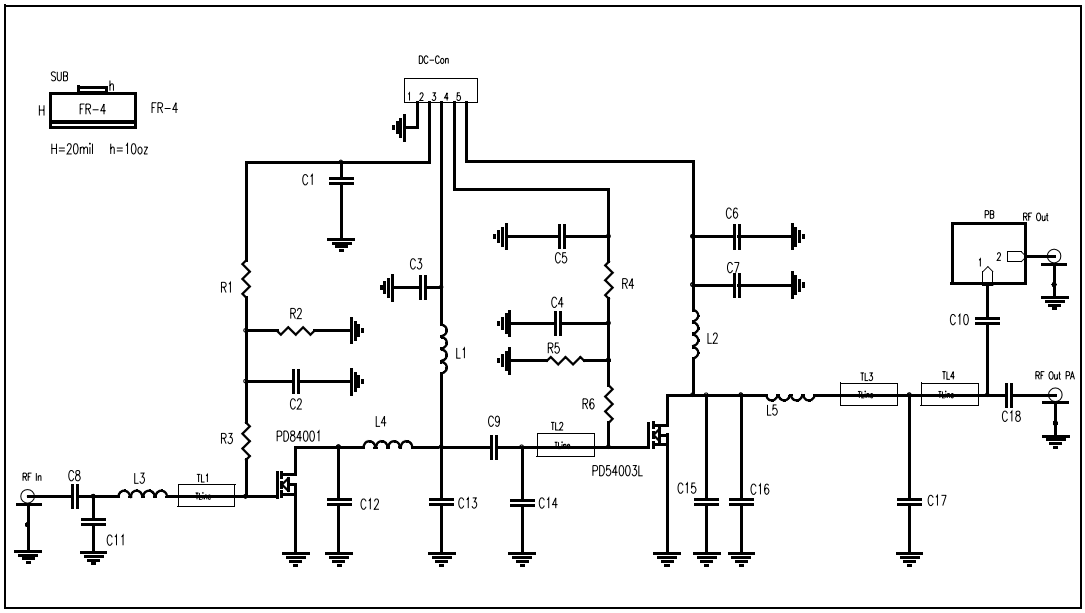
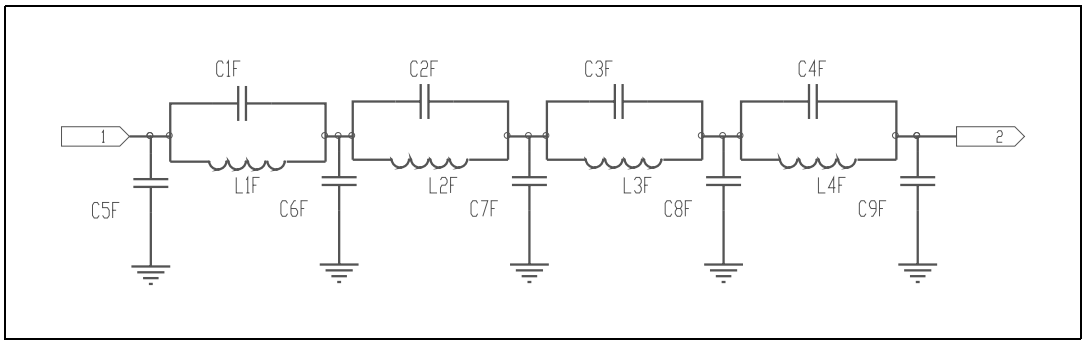
Filter schematic