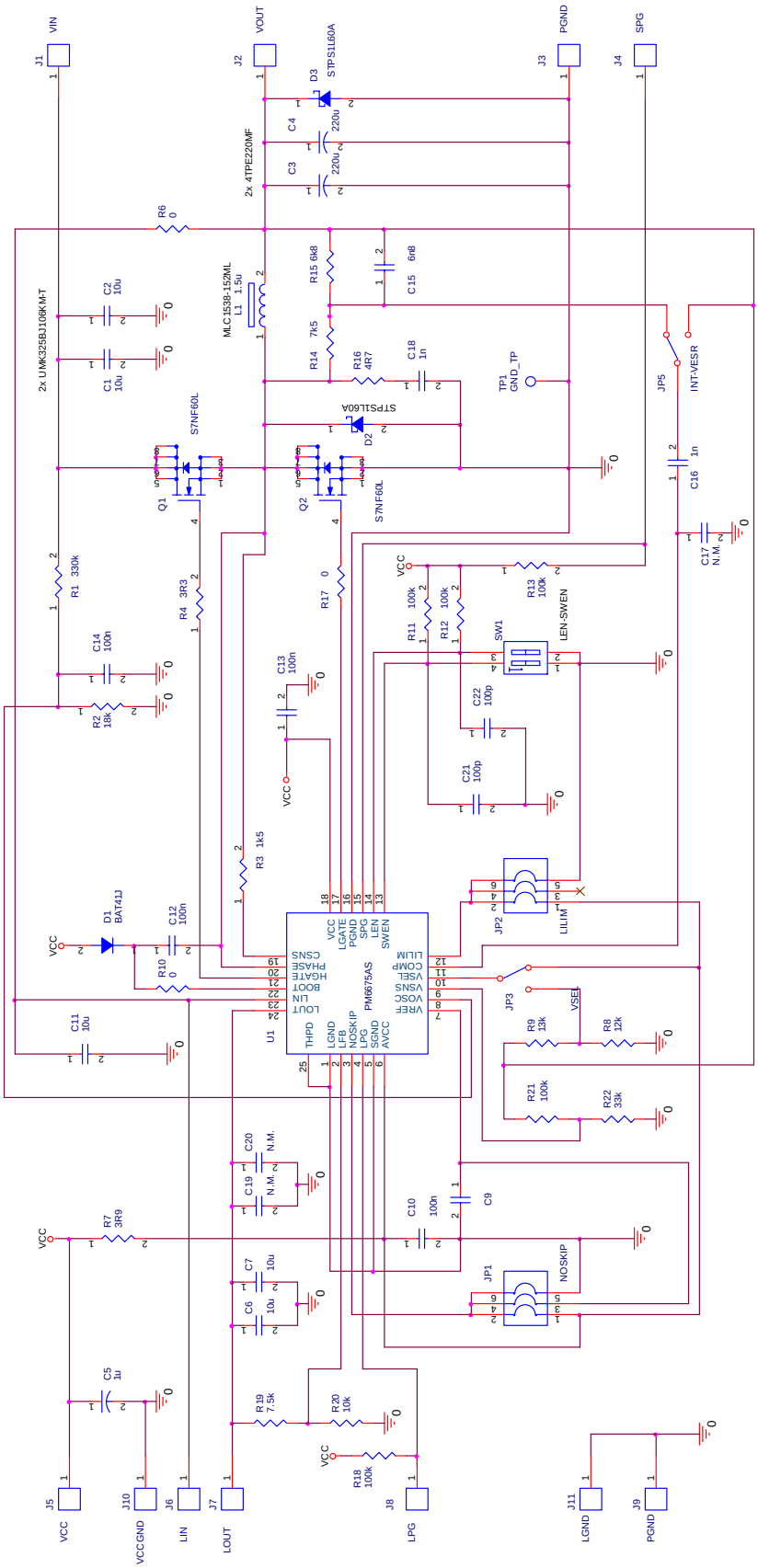STEVAL-ISA052V2 Evaluation KIT Schematic