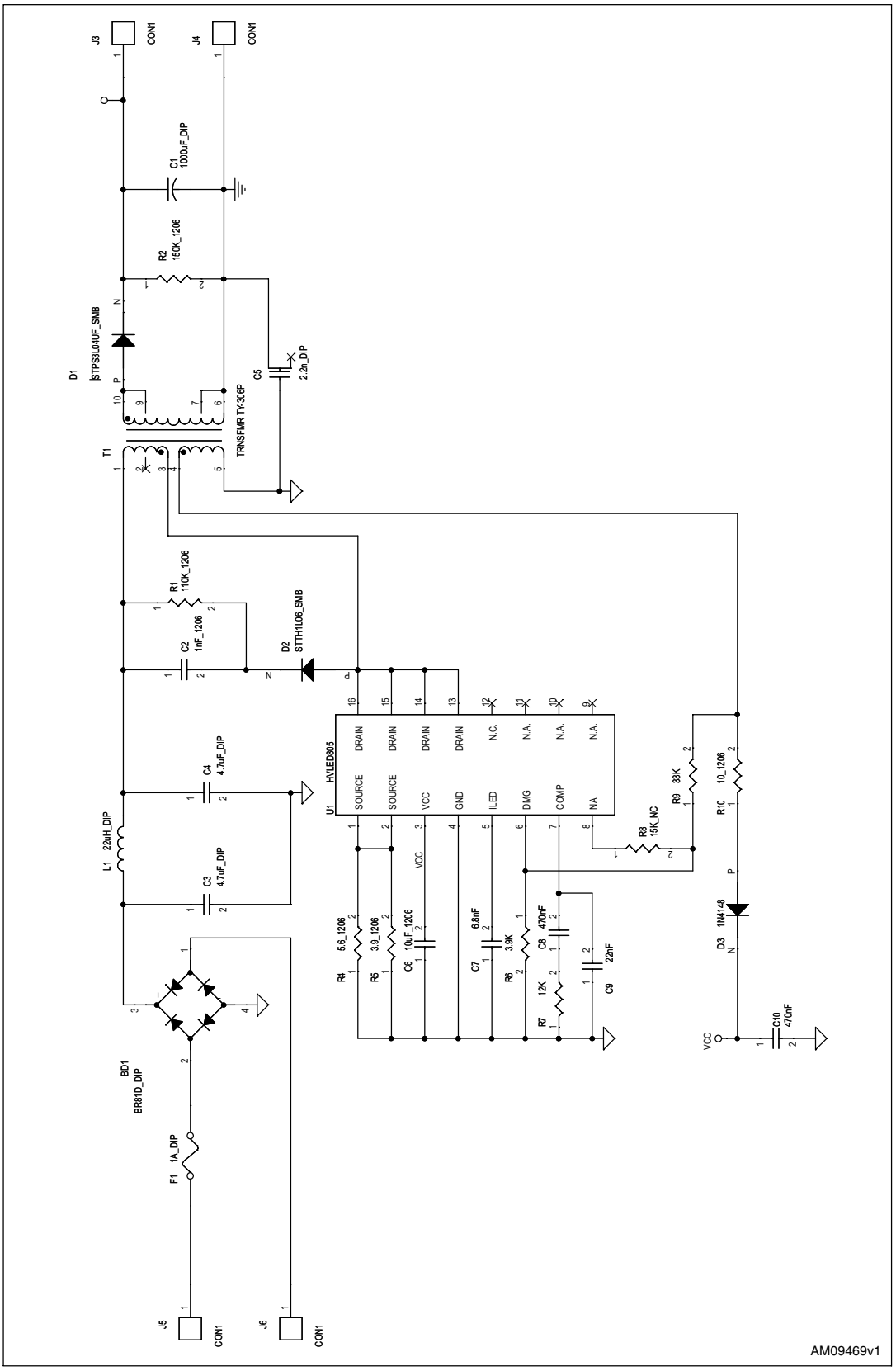STEVAL-ILL037V1 Electrical schematic