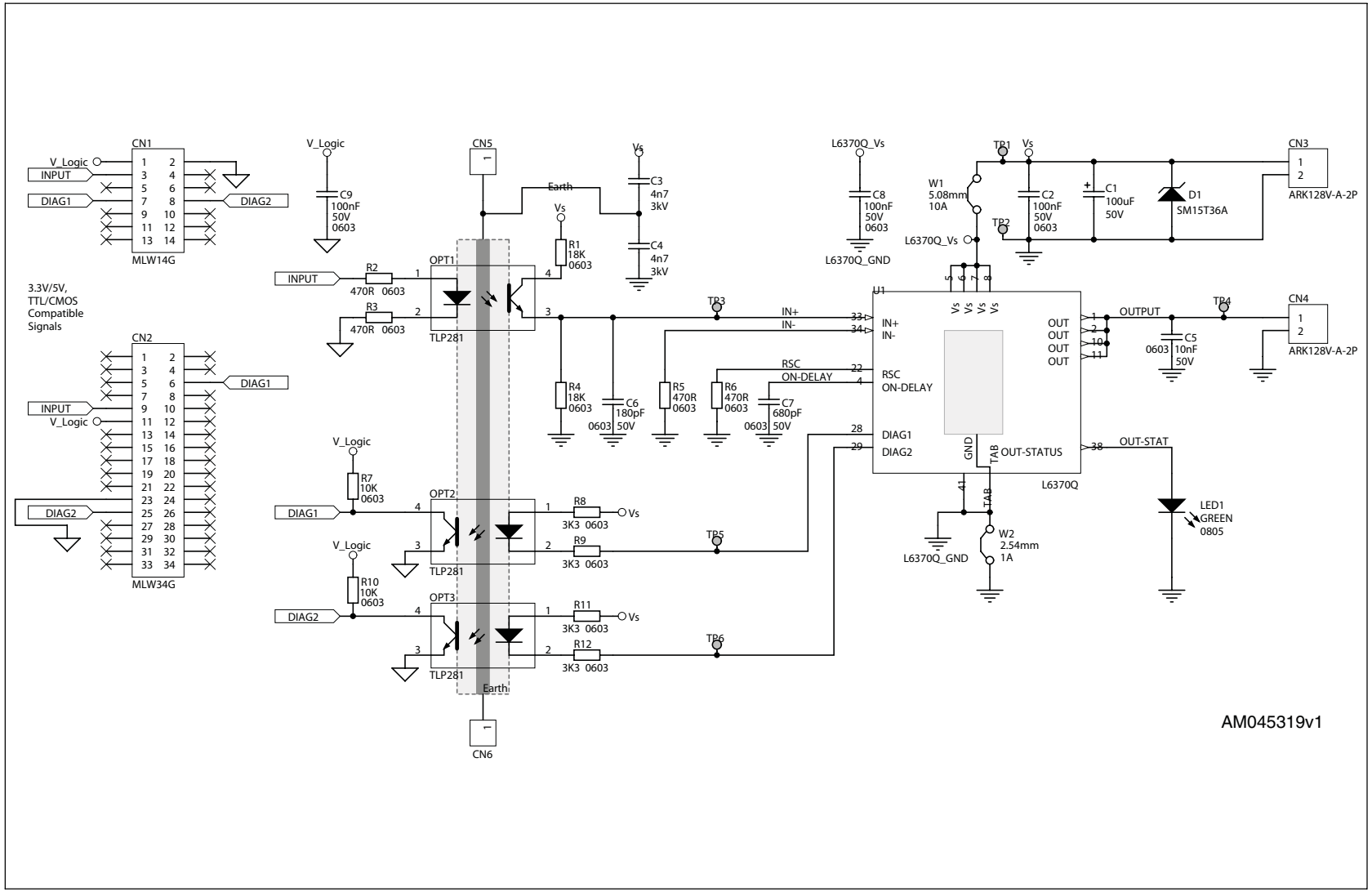STEVAL-IFP020V1 Schematic