PSU
022-19450R2-PSU_L5963.SchDoc

Input: +12V (+/- 1V) 2A

Power supply

Output 1: 5.0V; 200mA (Linear)
Output 2: 5.0V; 200mA (Linear)
Output 3: 3.3V (SMPS)
Output 4: 1.2V (SMPS)

Chorus 10M 386BGA - Power Supply
022-19450R2-SPC58NH_Supply.SchDoc

SPC58NH - BGA386

Power supply

JTAG and RESET
022-19450R2-JTAG and Reset.SchDoc

JTAG + RESET
JTAG
RESET

eMMC + uSDCard
022-19450R2-eMMC_uSDCard.SchDoc

eMMC + uSD Card Reader
eMMC
RESET

HyperFLASH & HyperRAM
022-19450R2-HyperFLASH_HyperRAM.SchDoc

OctalSPI
OctalSPI
RESET

Ethernet 10-100M
022-19450R2-Ethernet 10-100M.SchDoc

Ethernet 10-100M
ETH_0
RESET

Ethernet 1GB
022-19450R2-Ethernet 1Gb.SchDoc

Ethernet 1G
ETH_1
RESET

I2C + GPConnector
022-19450R2-I2C_GPConnector.SchDoc

4x I2C
I2C
GPConn
RESET

Chorus 10M 386BGA - I/O Signals
022-19450R2-SPC58NH_IO.SchDoc

JTAG
RESET
eMMC
OctalSPI
ETH_0
ETH_1
I2C
GPConn
CAN
LIN_KLine
FlexRay
UART
TFT
User
STxx
USBtoUART

SPC58NH - BGA386

I/O Signals

CAN-FD
022-19450R2-CAN-FD.SchDoc

2x CAN-FD
2x16pins connectors
CAN

LIN-KLine
022-19450R2-LIN_KLine.SchDoc

LIN + KLine
LIN_KLine

FlexRay and UART
022-19450R2-FlexRay_UART.SchDoc

FlexRay
UART
FlexRay
UART

User, TFT and STxx
022-19450R2-User_TFT_STxx.SchDoc

User_TFT_STxx
TFT
User
STxx

USB to UART
022-19450R2-USB_UART.SchDoc

USB to UART
USBtoUART

Z1 TORRETTA-FF FF-M3x20-NY
Z2 TORRETTA-FF FF-M3x20-NY
Z3 TORRETTA-FF FF-M3x20-NY
Z4 TORRETTA-FF FF-M3x20-NY
Z5 VITE-PIATTA V3X6-Y
Z6 VITE-PIATTA V3X6-Y
Z7 VITE-PIATTA V3X6-Y
Z8 VITE-PIATTA V3X6-Y

Title *SPC58NH-DISP - Block Diagram*			STMicroelectronics srl *ADG - Automotive and Discrete Group* *Via C. Olivetti, 2* *20864 Agrate B.za (MB)* *Italy*
Size: A4	Number: 1	Revision: 1.0	Cannot open file C:\Users\marcobrugora\Pictures\ST\Gif & various\ST
Date: 05/02/2021	Time: 15:39:52	Sheet 1 of 15	
File: 022-19450R2-Main Page.SchDoc			

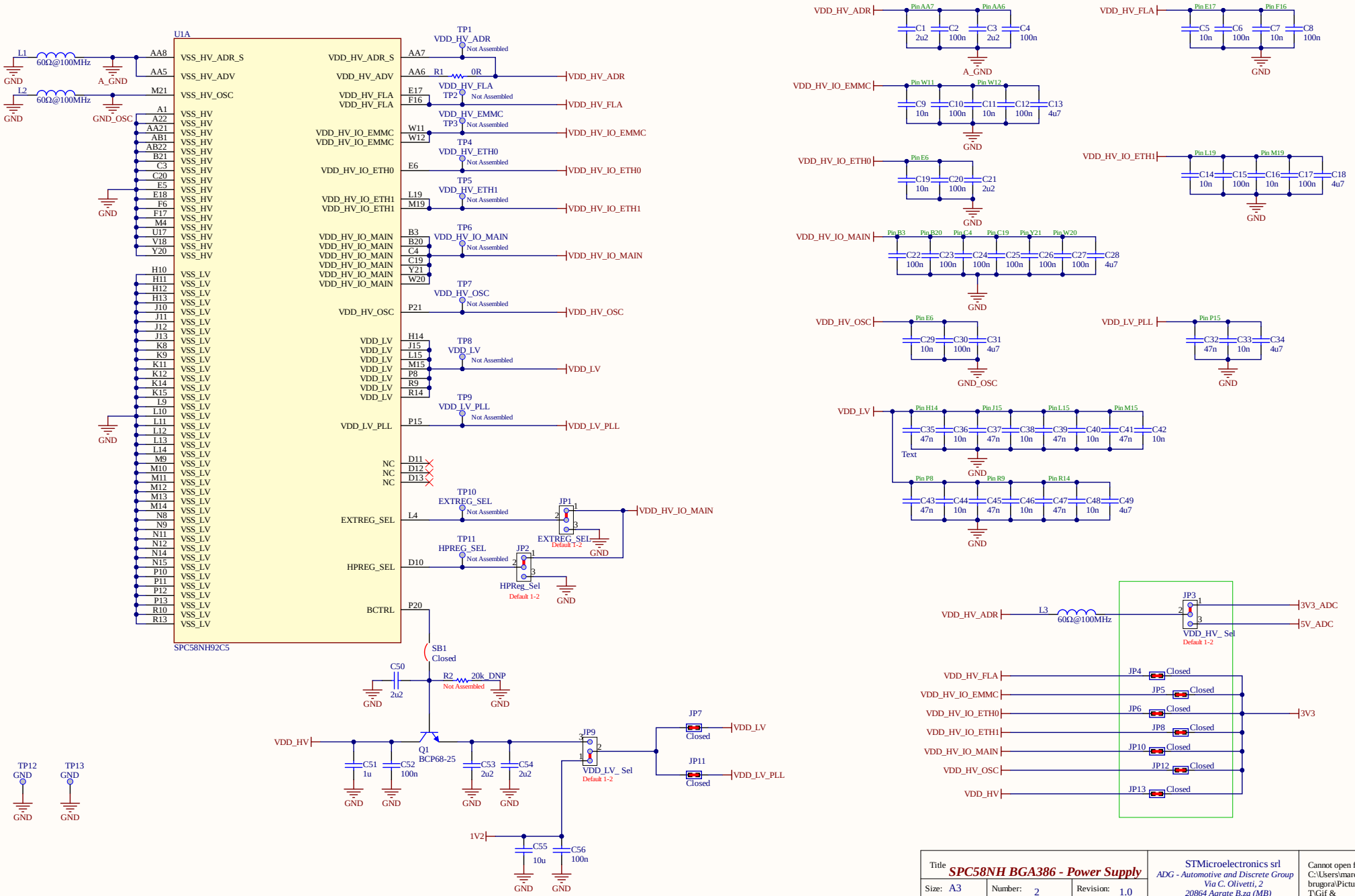

Title	***SPC58NH BGA386 - Power Supply***		STMicroelectronics srl *ADG - Automotive and Discrete Group* *Via C. Olivetti, 2* *20864 Agrate B.za (MB)* *Italy*
Size: A3	Number: 2	Revision: 1.0	Cannot open file C:\Users\marcobrugora\Pictures\STGif & various\ST
Date: 05/02/2021	Time: 15:39:52	Sheet 2 of 15	
File: 022-19450R2-SPC58NH_Supply.SchDoc			

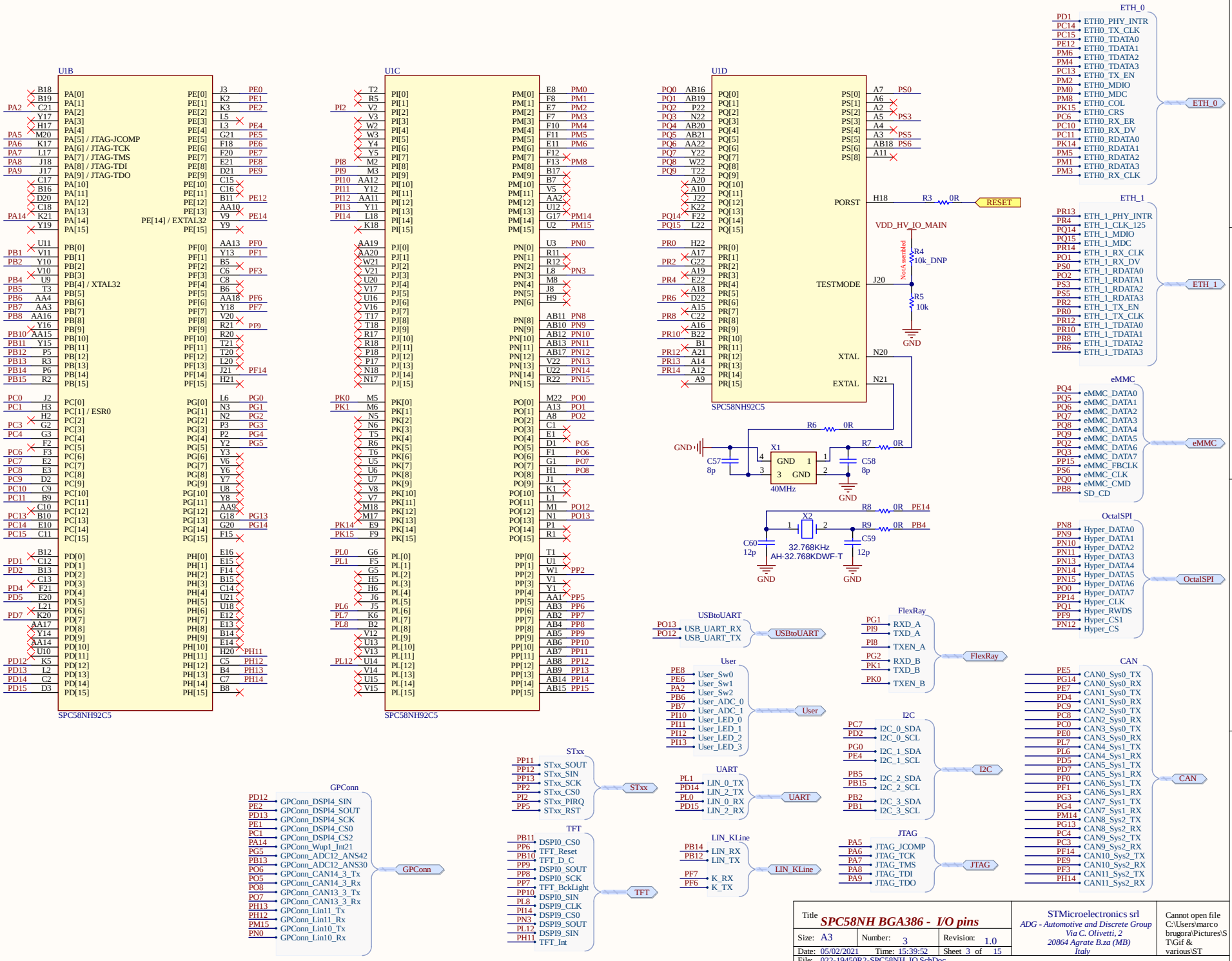

Title: SPC58NH BGA386 - I/O pins

Size: A3 | Number: 3 | Revision: 1.0

Date: 05/02/2021 | Time: 15:39:52 | Sheet 3 of 15

File: 022-19450R2-SPC58NH_IO.SchDoc

STMicroelectronics srl
ADG - Automotive and Discrete Group
Via C. Olivetti, 2
20864 Agrate B.za (MB)
Italy

Cannot open file C:\Users\marcobrugora\Pictures\STGif & various\ST

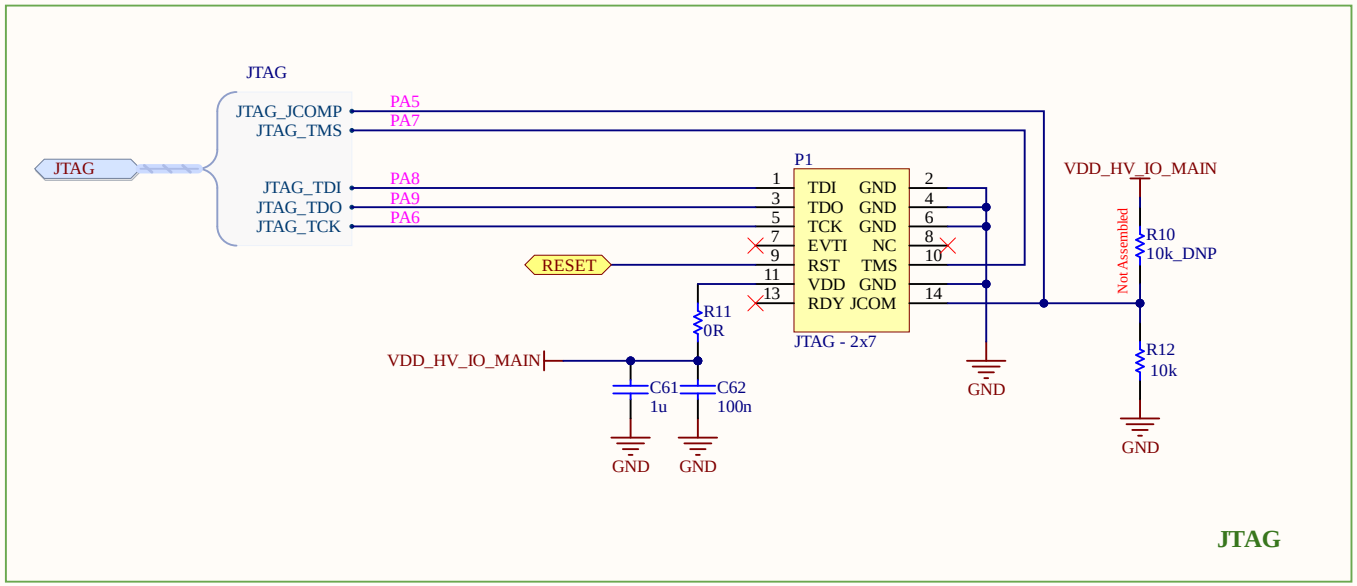

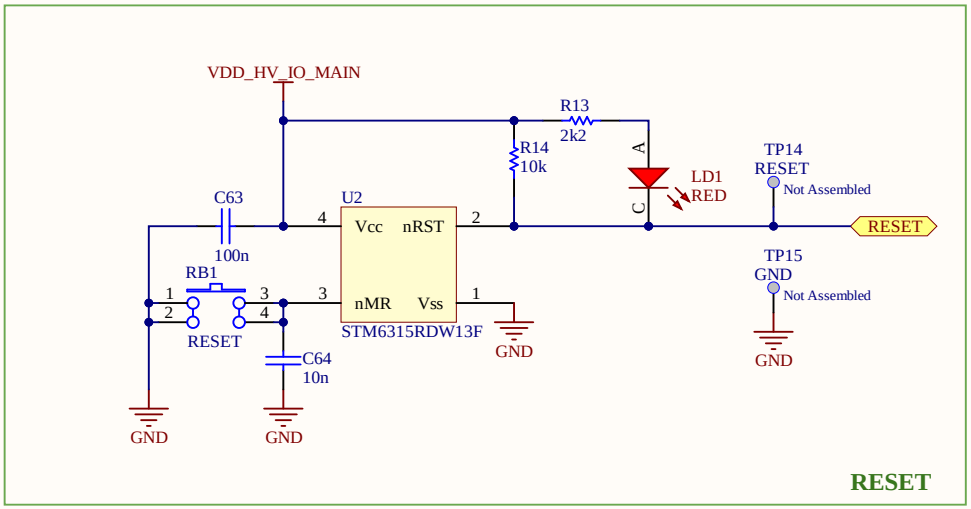

Title *JTAG and RESET*			STMicroelectronics srl *ADG - Automotive and Discrete Group* *Via C. Olivetti, 2* *20864 Agrate B.za (MB)* *Italy*
Size: A4	Number: 4	Revision: 1.0	
Date: 05/02/2021	Time: 15:39:52	Sheet 4 of 15	
File: 022-19450R2-JTAG and Reset.SchDoc			

Cannot open file C:\Users\marcobrugora\Pictures\ST\Gif & various\ST

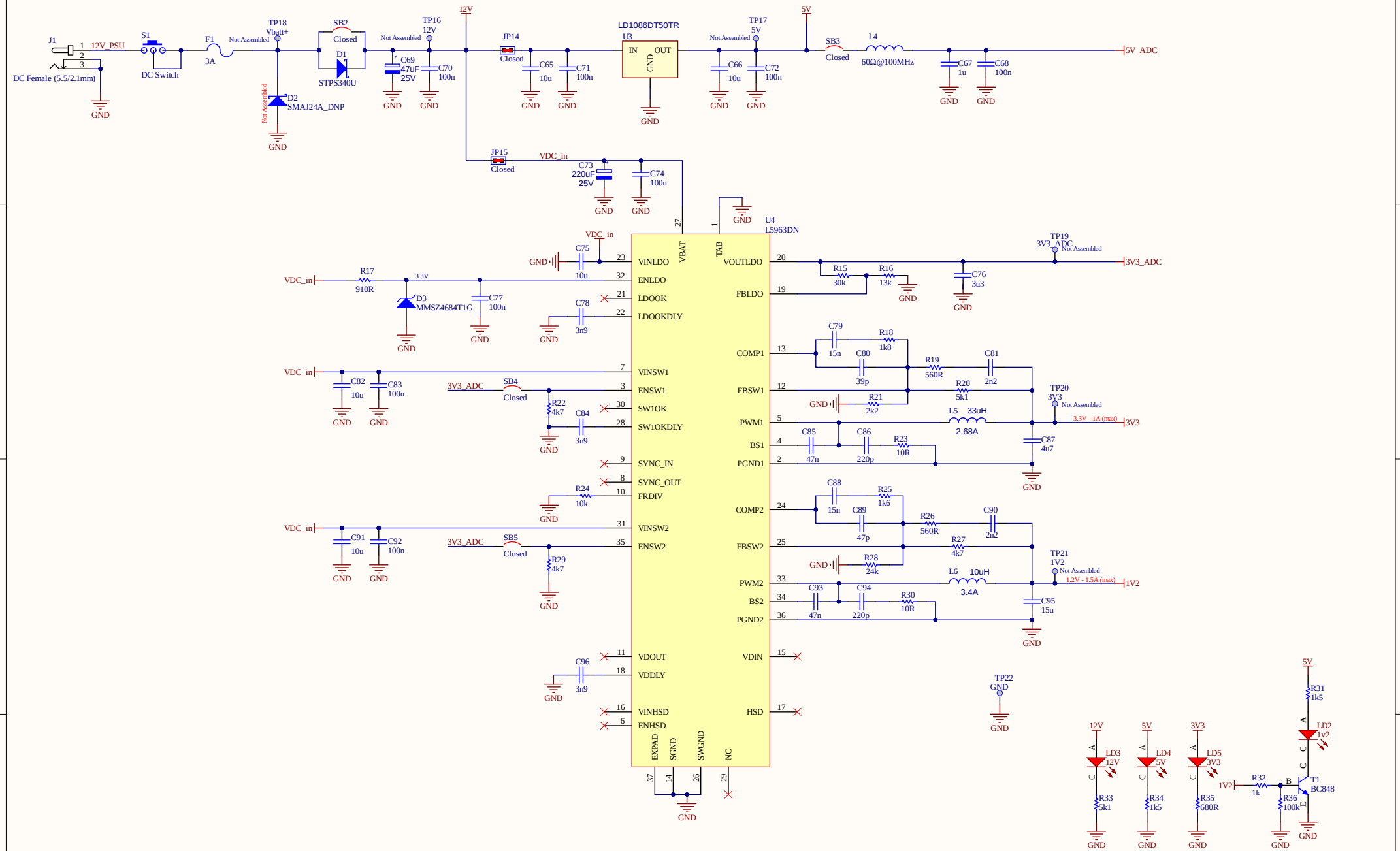

Title **Power Supply**			STMicroelectronics srl *ADG - Automotive and Discrete Group* *Via C. Olivetti, 2* *20864 Agrate B.za (MB)* *Italy*
Size: A3	Number: 5	Revision: 1.0	
Date: 05/02/2021	Time: 15:39:53	Sheet 5 of 15	
File: 022-19450R2-PSU_L5963.SchDoc			

Cannot open file C:\Users\marcobrugora\Pictures\STGif & various\ST

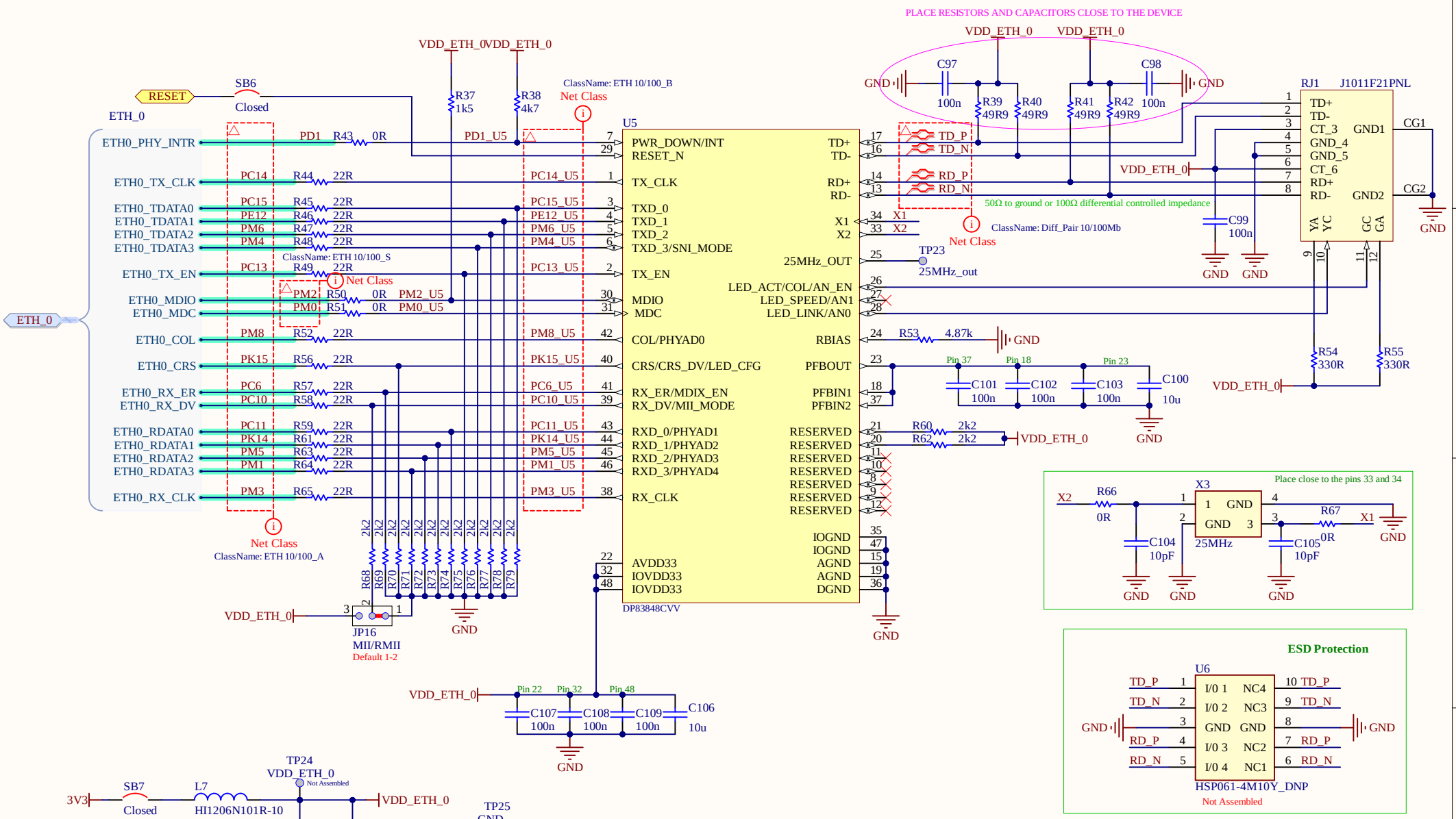

Title **Ethernet 10-100**			STMicroelectronics srl *ADG - Automotive and Discrete Group* *Via C. Olivetti, 2* *20864 Agrate B.za (MB)* *Italy*
Size: A4	Number: 6	Revision: 1.0	Cannot open file C:\Users\marcobrugora\Pictures\ST\Gif & various\ST
Date: 05/02/2021	Time: 15:39:53	Sheet 6 of 15	
File: 022-19450R2-Ethernet 10-100M.SchDoc			

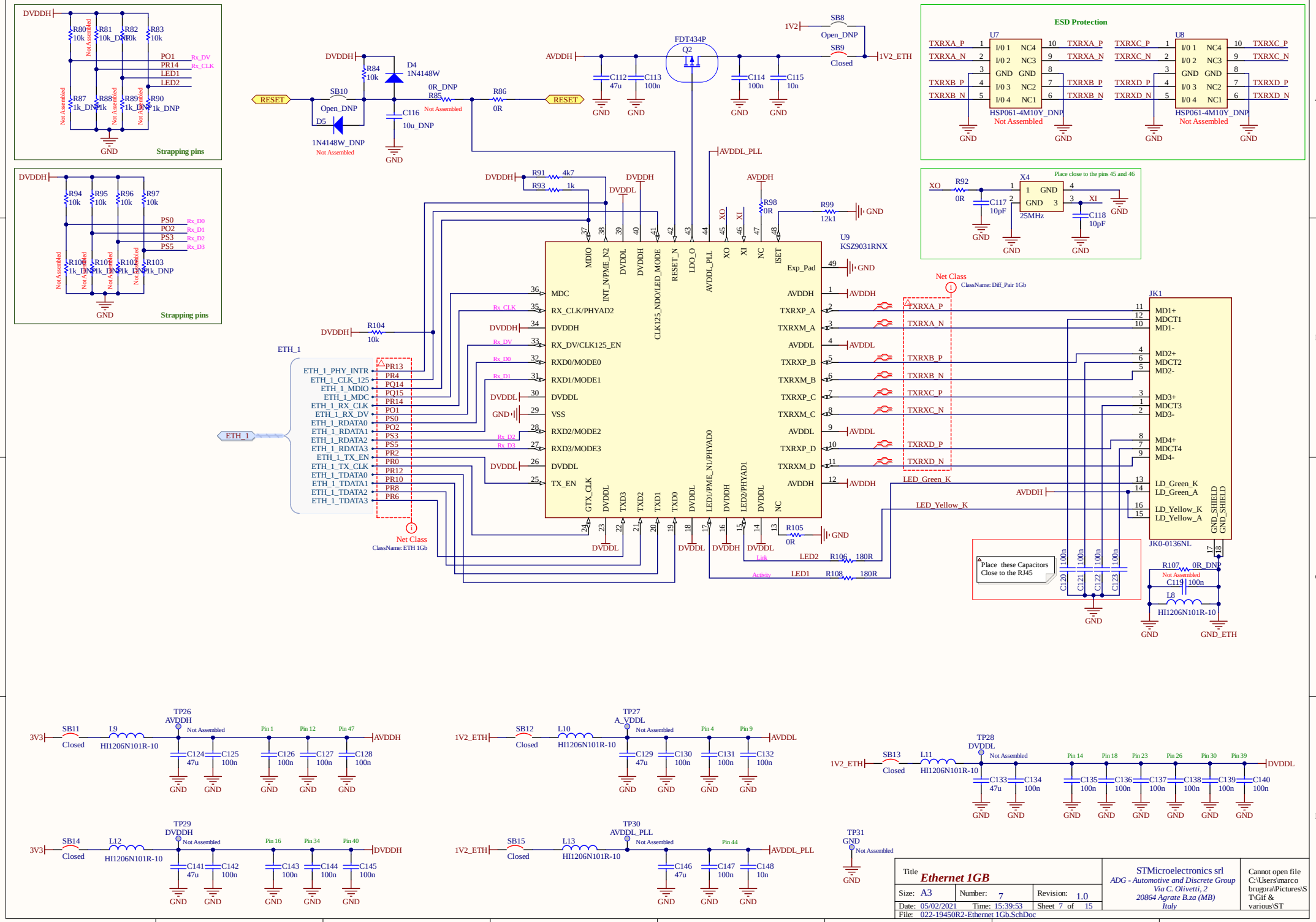
Strapping pins
Strapping pins
ESD Protection
U7
U8
HSP061-4M10Y_DNP
Not Assembled
U9
KSZ9031RNX
JK1
JK0-0136NL
Net Class
ClassName: Diff_Pair 1Gb
Net Class
ClassName: ETH 1Gb
Place these Capacitors Close to the RJ45
Place close to the pins 45 and 46
25MHz
FDT434P
Open_DNP
Closed
1N4148W
1N4148W_DNP
HI1206N101R-10
Title
Ethernet 1GB
Size: A3
Number: 7
Revision: 1.0
Date: 05/02/2021
Time: 15:39:53
Sheet 7 of 15
File: 022-19450R2-Ethernet 1Gb.SchDoc
STMicroelectronics srl
ADG - Automotive and Discrete Group
Via C. Olivetti, 2
20864 Agrate B.za (MB)
Italy
Cannot open file C:\Users\marco brugora\Pictures\STGif & various\ST

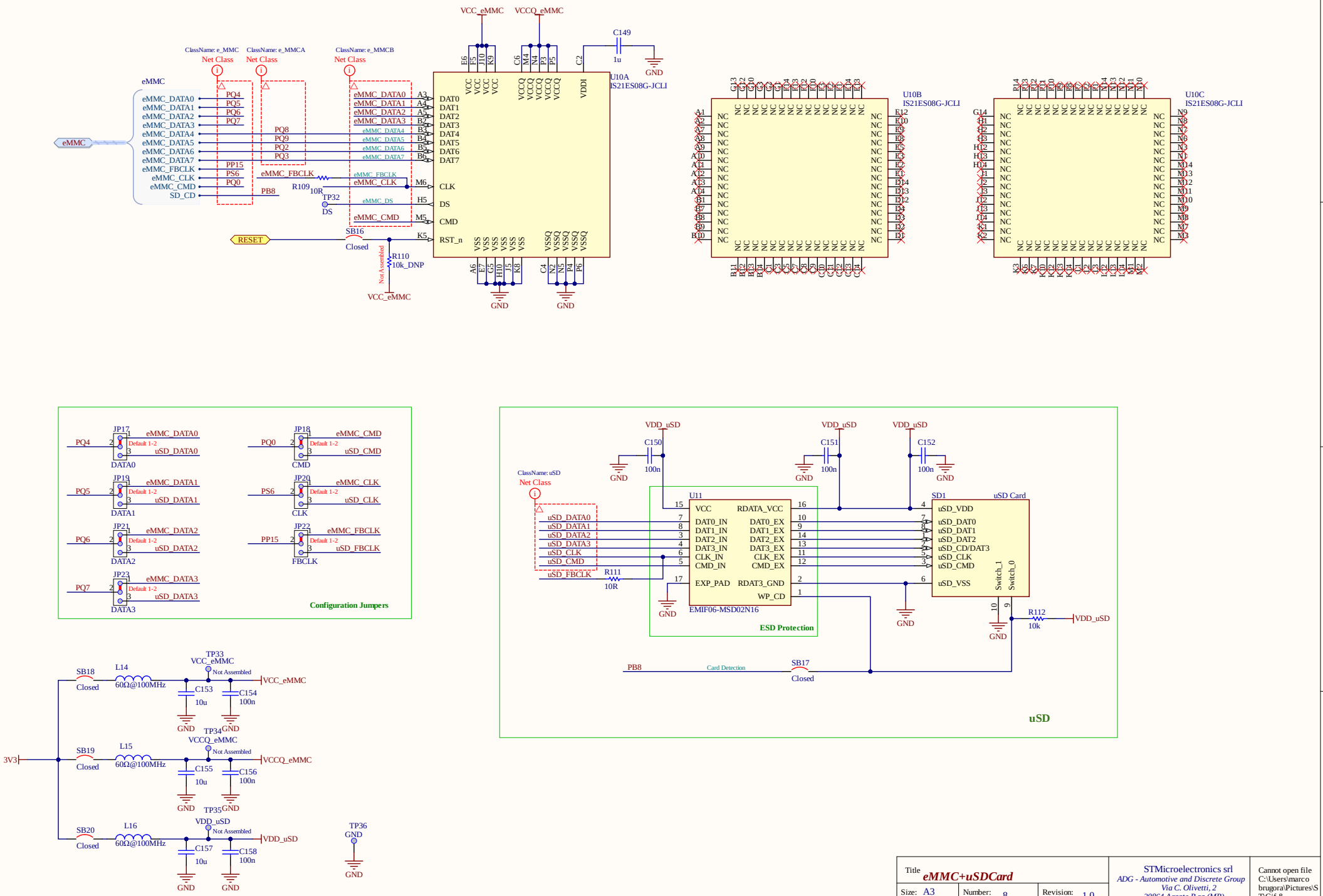

Title	eMMC+uSDCard		
Size: A3	Number: 8	Revision: 1.0	
Date: 05/02/2021	Time: 15:39:53	Sheet 8 of 15	
File: 022-19450R2-eMMC_uSDCard.SchDoc			

STMicroelectronics srl
ADG - Automotive and Discrete Group
Via C. Olivetti, 2
20864 Agrate B.za (MB)
Italy

Cannot open file C:\Users\marcobrugora\Pictures\STGif & various\ST

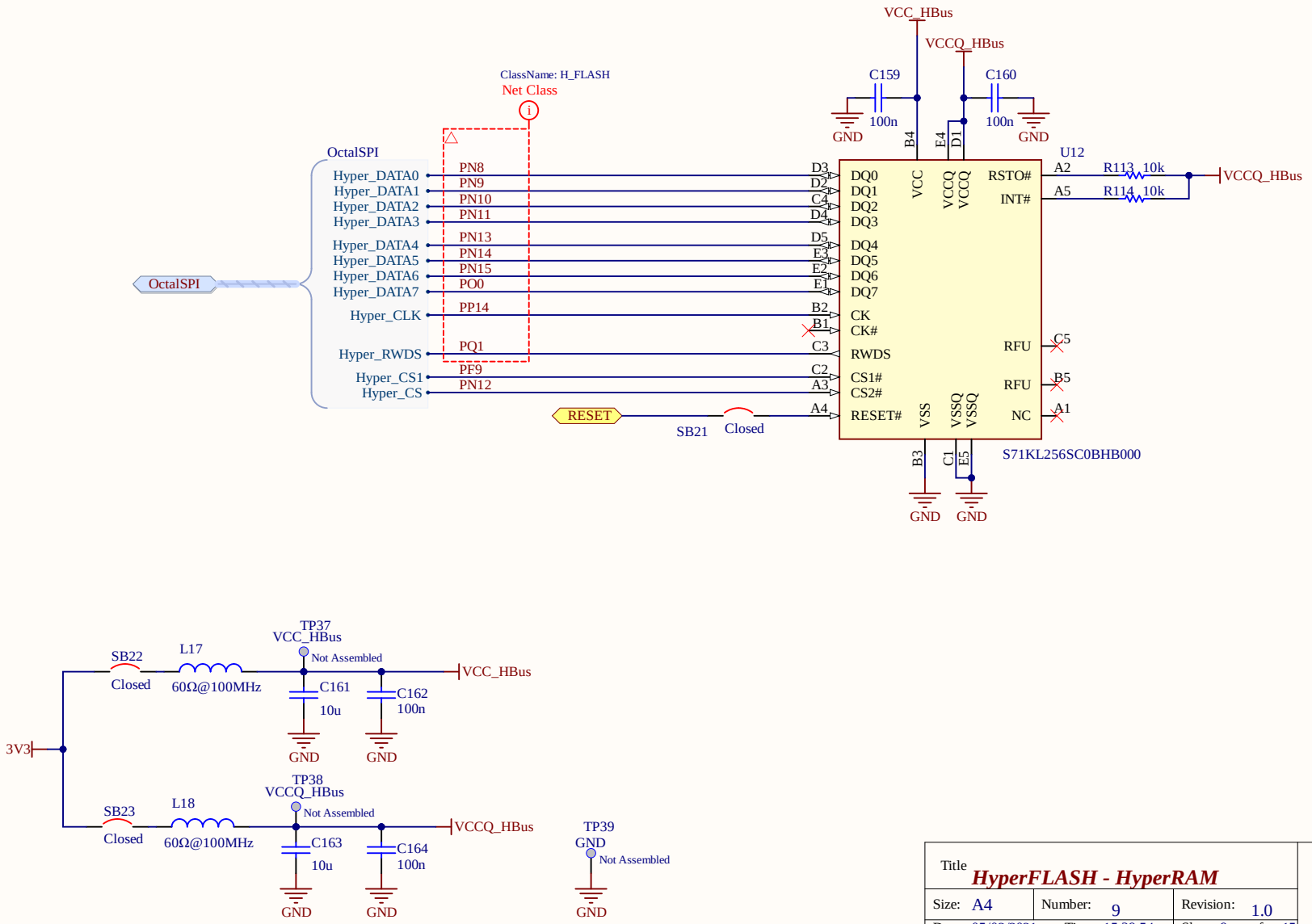

Title **HyperFLASH - HyperRAM**			STMicroelectronics srl *ADG - Automotive and Discrete Group* *Via C. Olivetti, 2* *20864 Agrate B.za (MB)* *Italy*
Size: A4	Number: 9	Revision: 1.0	Cannot open file C:\Users\marcobrugora\Pictures\ST\Gif & various\ST
Date: 05/02/2021	Time: 15:39:54	Sheet 9 of 15	
File: 022-19450R2-HyperFLASH_HyperRAM.SchDoc			

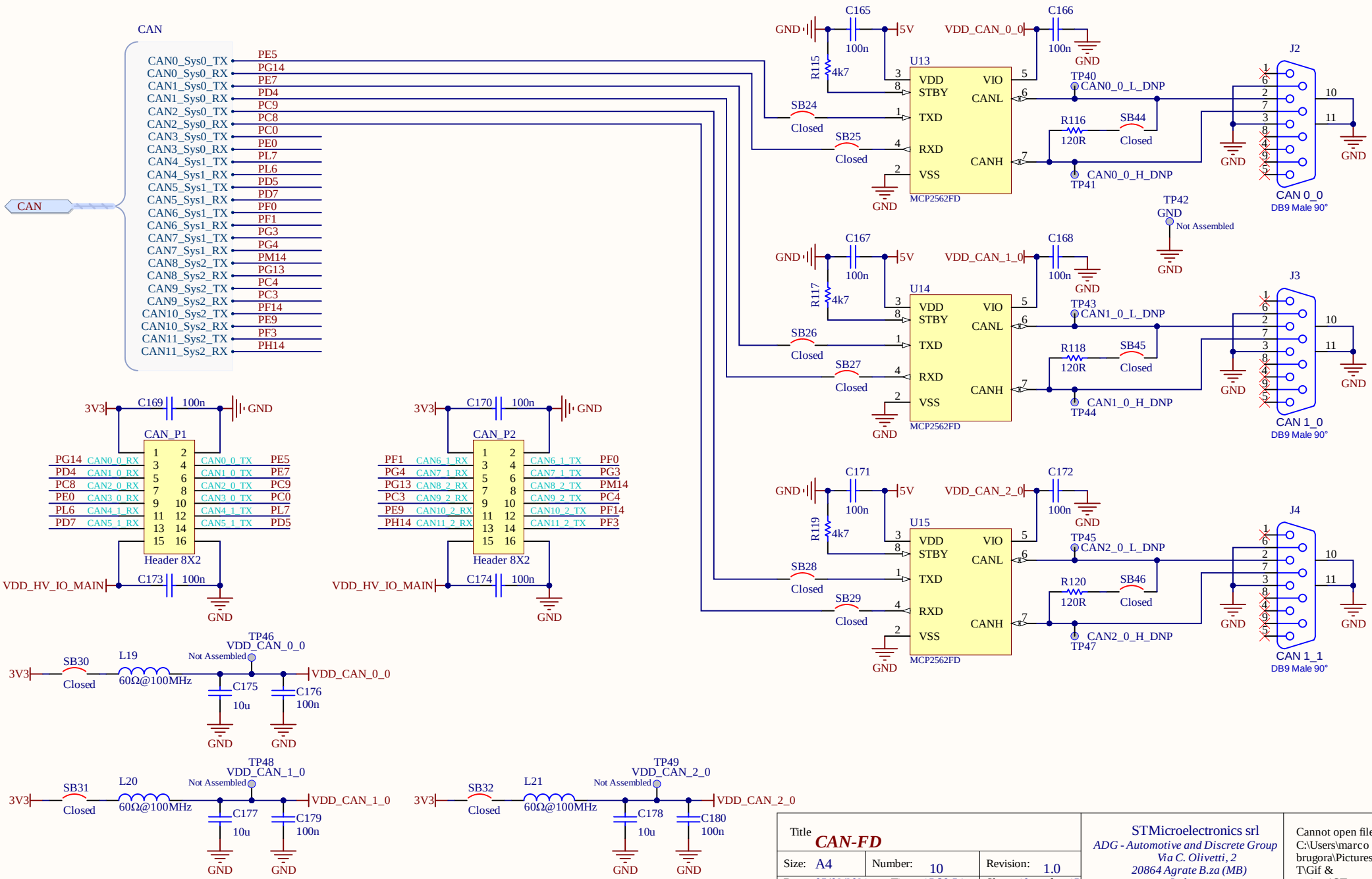

Title	CAN-FD		
Size: A4	Number: 10	Revision: 1.0	
Date: 05/02/2021	Time: 15:39:54	Sheet 10 of 15	
File: 022-19450R2-CAN-FD.SchDoc			

STMicroelectronics srl
ADG - Automotive and Discrete Group
Via C. Olivetti, 2
20864 Agrate B.za (MB)
Italy

Cannot open file C:\Users\marcobrugora\Pictures\ST\Gif & various\ST

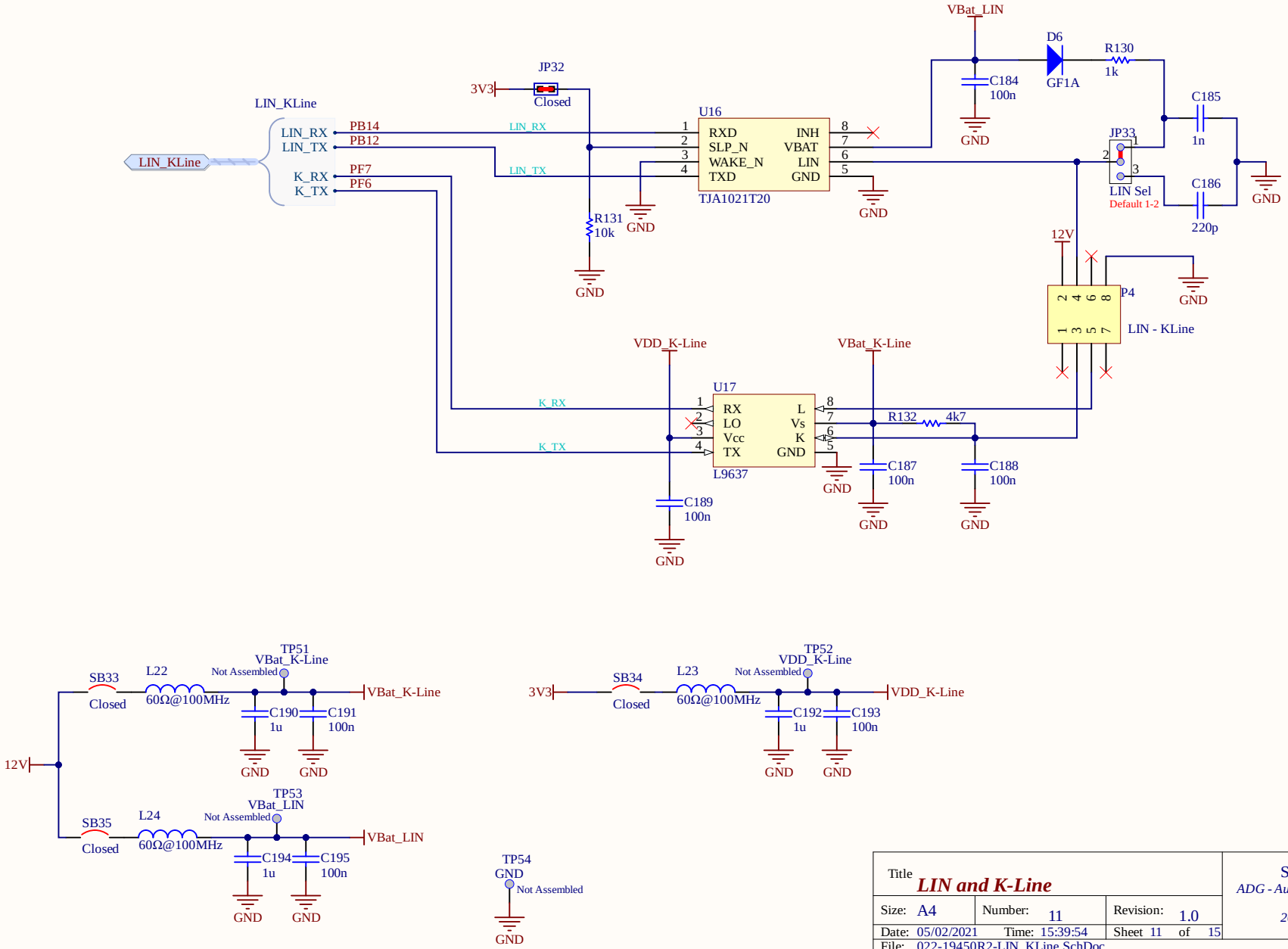

Title **LIN and K-Line**			STMicroelectronics srl *ADG - Automotive and Discrete Group* *Via C. Olivetti, 2* *20864 Agrate B.za (MB)* *Italy*
Size: A4	Number: 11	Revision: 1.0	
Date: 05/02/2021	Time: 15:39:54	Sheet 11 of 15	
File: 022-19450R2-LIN_KLine.SchDoc			

Cannot open file C:\Users\marcobrugora\Pictures\ST\Gif & various\ST

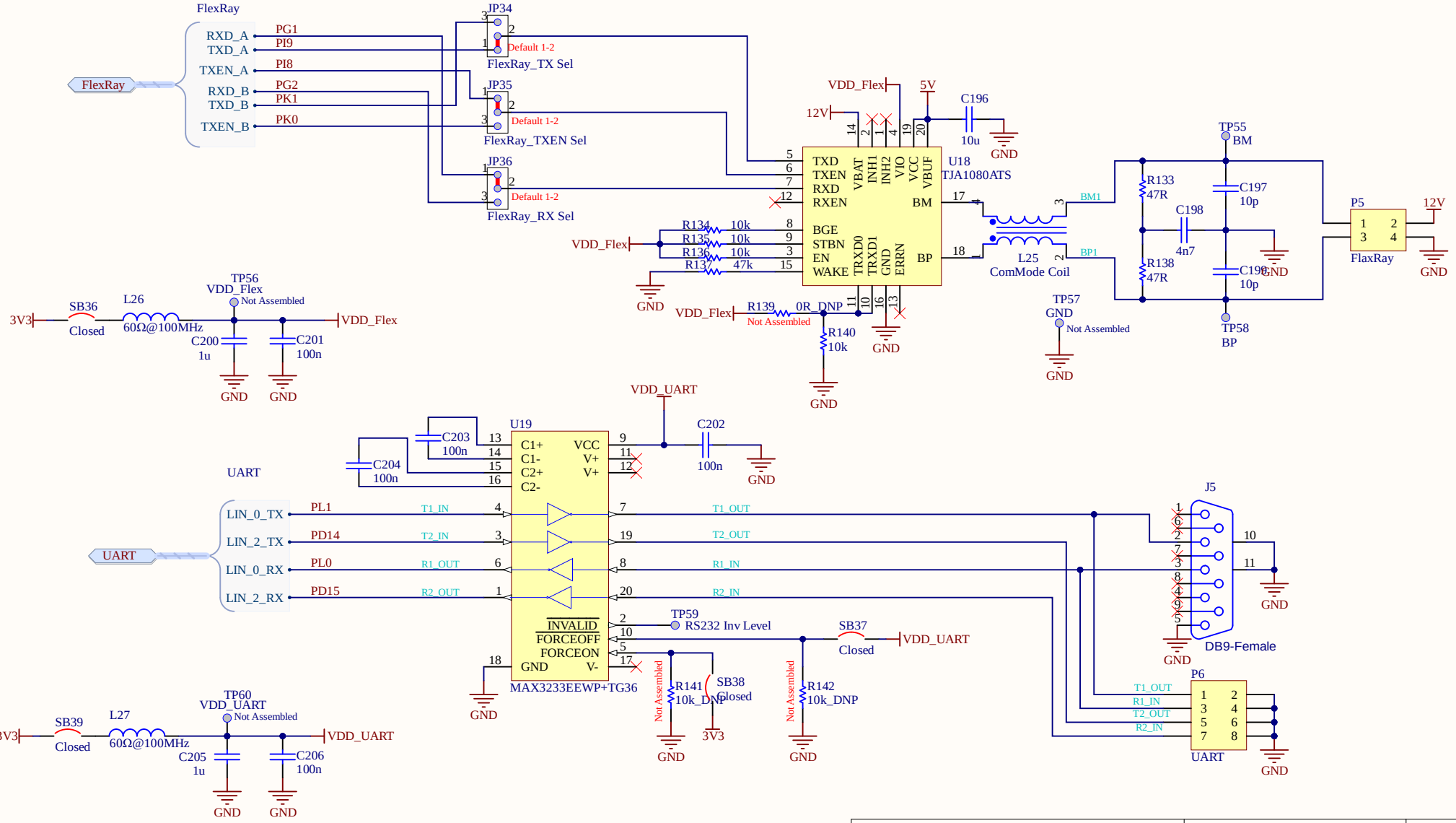

Title **FlexRay and UART (RS232)**			STMicroelectronics srl *ADG - Automotive and Discrete Group* *Via C. Olivetti, 2* *20864 Agrate B.za (MB)* *Italy*
Size: A4	Number: 12	Revision: 1.0	Cannot open file C:\Users\marcobrugora\Pictures\ST\Gif & various\ST
Date: 05/02/2021	Time: 15:39:54	Sheet 12 of 15	
File: 022-19450R2-FlexRay_UART.SchDoc			

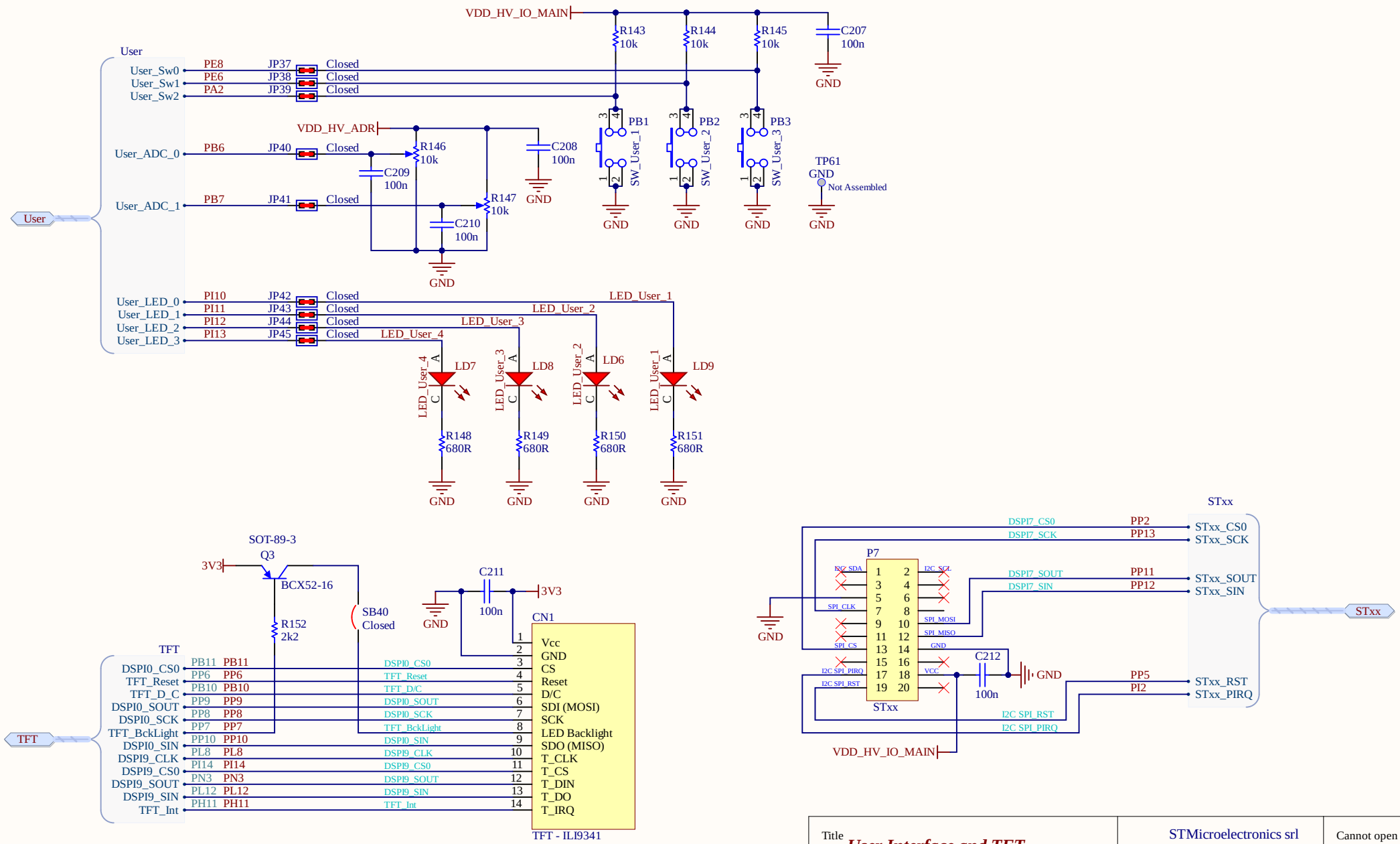

Title **User Interface and TFT**			STMicroelectronics srl *ADG - Automotive and Discrete Group* *Via C. Olivetti, 2* *20864 Agrate B.za (MB)* *Italy*
Size: A4	Number: 13	Revision: 1.0	Cannot open file C:\Users\marcobrugora\Pictures\ST\Gif & various\ST
Date: 05/02/2021	Time: 15:39:54	Sheet 13 of 15	
File: 022-19450R2-User_TFT_STxx.SchDoc			

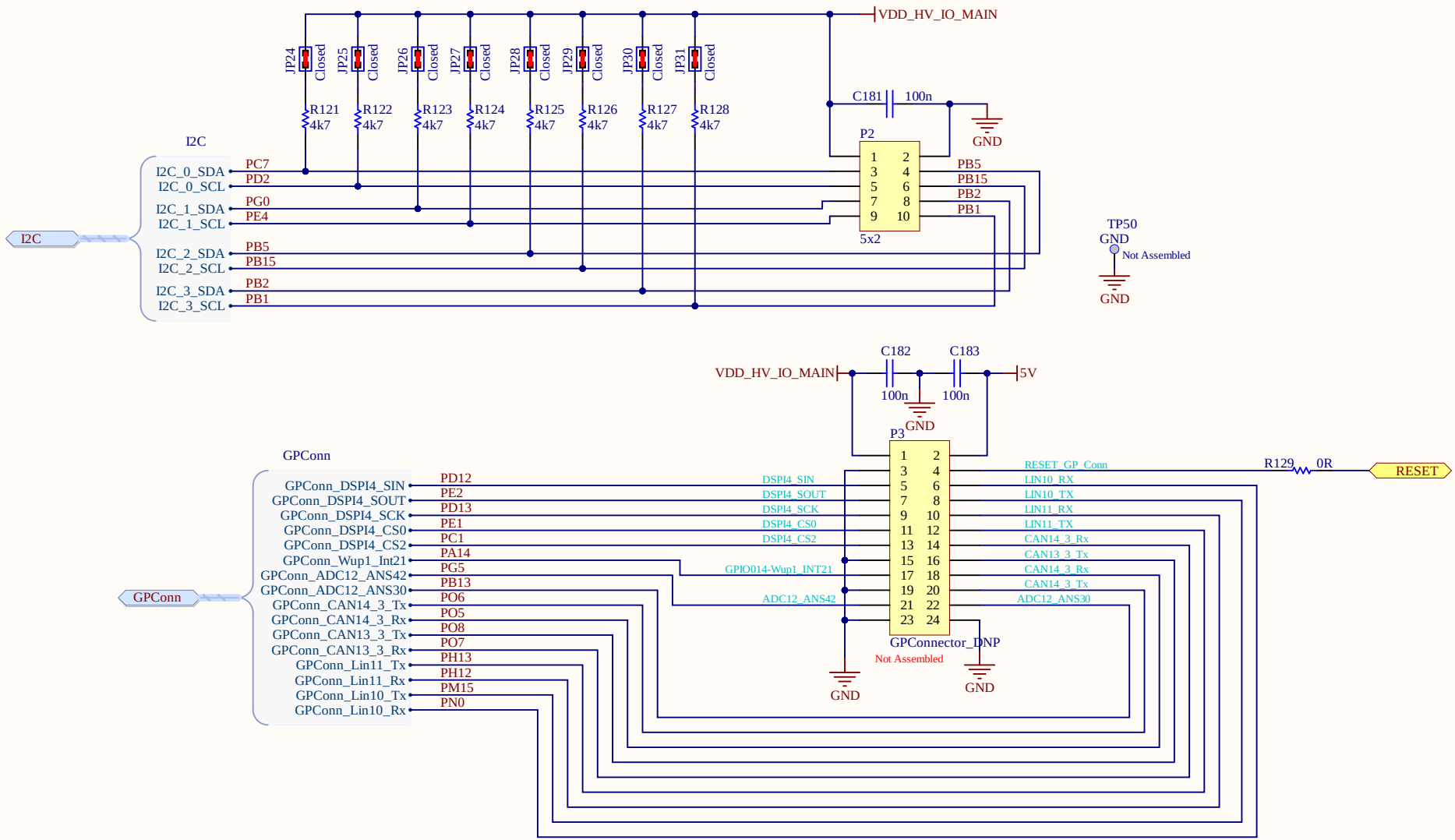

Title **I2C and GPConnector**			STMicroelectronics srl *ADG - Automotive and Discrete Group* *Via C. Olivetti, 2* *20864 Agrate B.za (MB)* *Italy*
Size: A4	Number: 14	Revision: 1.0	
Date: 05/02/2021	Time: 15:39:54	Sheet 14 of 15	
File: 022-19450R2-I2C_GPConnector.SchDoc			

Cannot open file C:\Users\marcobrugora\Pictures\ST\Gif & various\ST

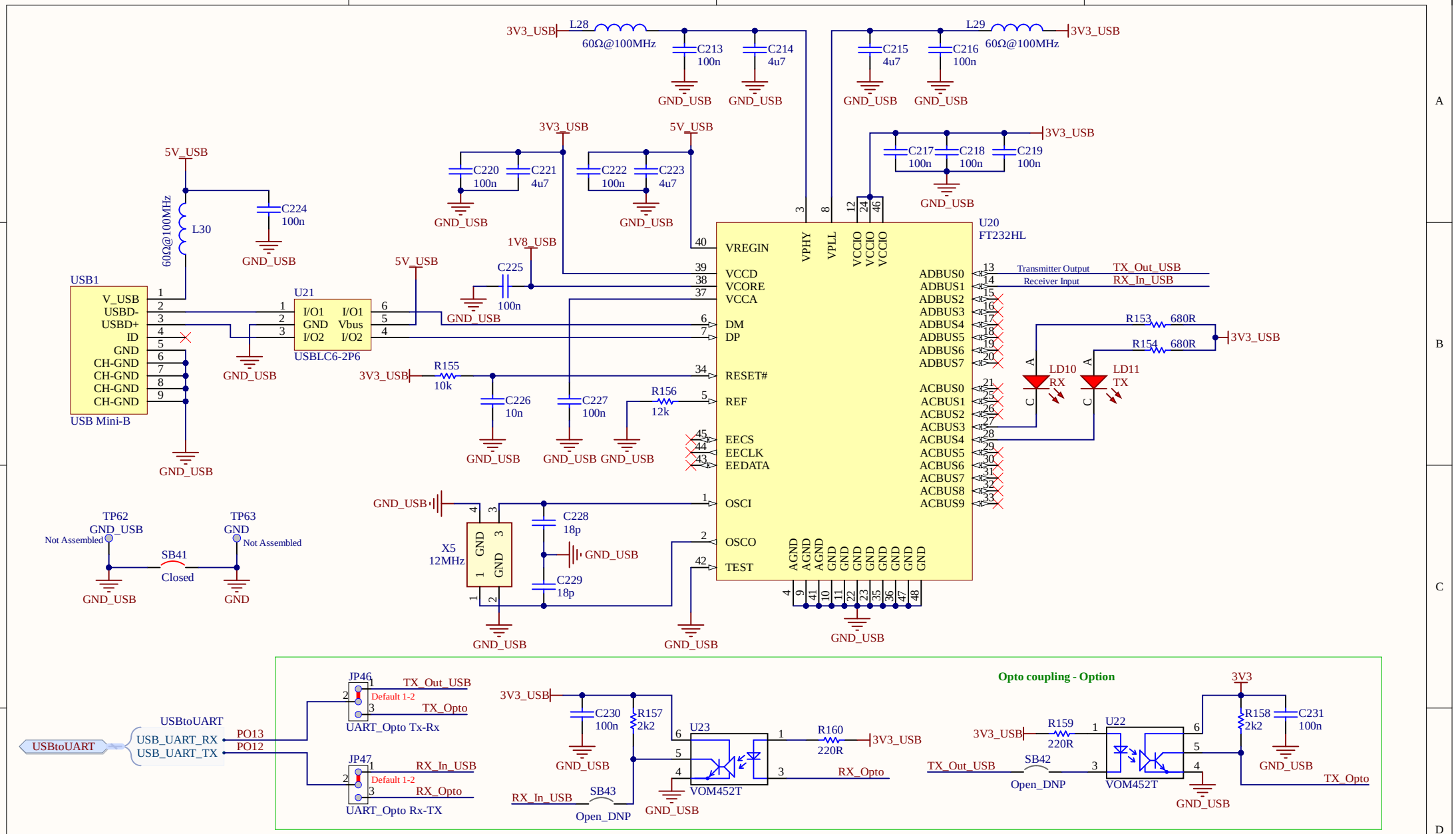

Title **USB-UART**			STMicroelectronics srl *ADG - Automotive and Discrete Group* *Via C. Olivetti, 2* *20864 Agrate B.za (MB)* *Italy*
Size: A4	Number: 15	Revision: 1.0	
Date: 05/02/2021	Time: 15:39:54	Sheet 15 of 15	
File: 022-19450R2-USB_UART.SchDoc			

Cannot open file C:\Users\marcobrugora\Pictures\ST\Gif & various\ST