STM32WL_QFN48_IPD_2Layers_LowPower

MB1874_LP

Table of contents

Sheet 1: Project overview (this page)

Sheet 2: STM32WL_QFN48_RefBoard_IPD_2Layers_LP.SchDoc

Legend

General comment such as function title, configuration, ...

Text to be added to silkscreen.

Warning text.

Notes to generate the board layout.

Open Platform License Agreement

The Open Platform License Agreement (“Agreement”) is a binding legal contract between you ("You") and STMicroelectronics International N.V. (“ST”), a company incorporated under the laws of the Netherlands acting for the purpose of this Agreement through its Swiss branch 39, Chemin du Champ des Filles, 1228 Plan-les-Ouates, Geneva, Switzerland.

By using the enclosed reference designs, schematics, PC board layouts, and documentation, in hardcopy or CAD tool file format (collectively, the “Reference Material”), You are agreeing to be bound by the terms and conditions of this Agreement. Do not use the Reference Material until You have read and agreed to this Agreement terms and conditions. The use of the Reference Material automatically implies the acceptance of the Agreement terms and conditions.

The complete Open Platform License Agreement can be found on www.st.com/opla.

U_Top
STM32WL_QFN48_RefBoard_IPD_2Layers_LP.SchDoc

Title: **Schematic sheet title to update**		
Project: **STM32WL_QFN48_IPD_2Layers_LowPower**		
Variant: [No Variations]		
Revision: A-01		Reference: MB1874_LP
Size: A4	Date: 20/07/2022	Sheet: 1 of 2

STM32WL QFN 2 Layers IPD - Low Power Mode - Reference Board

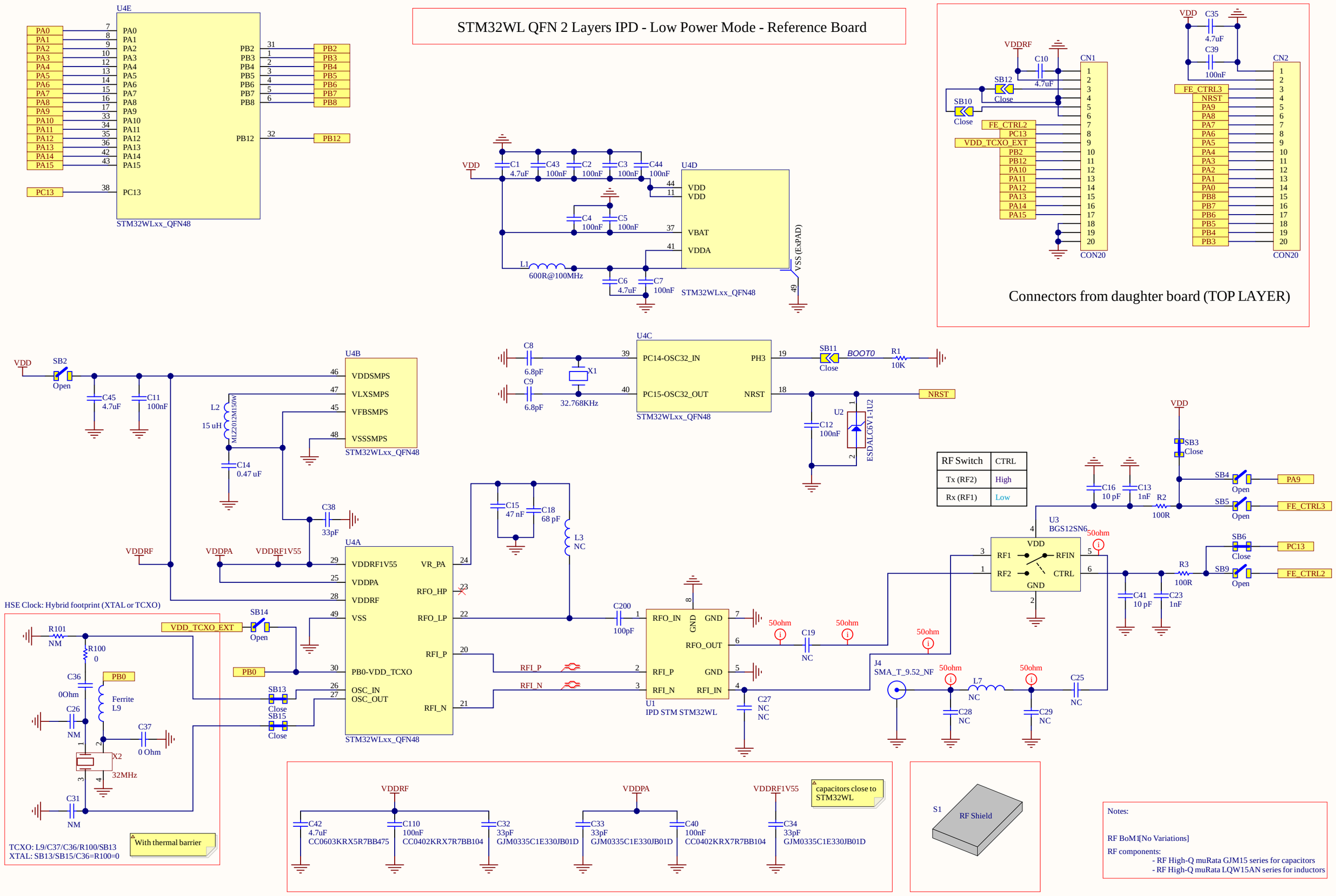

RF Switch	CTRL
Tx (RF2)	High
Rx (RF1)	Low

Title: STM32WL UFQFPN48 REF BOARD - Direct Tie - HP-2L		
Project: STM32WL_QFN48_IPD_2Layers_LowPower		
Variant: [No Variations]		
Revision: A-01		Reference: MB1874_LP
Size: A3	Date: 20/07/2022	Sheet: 2 of 2

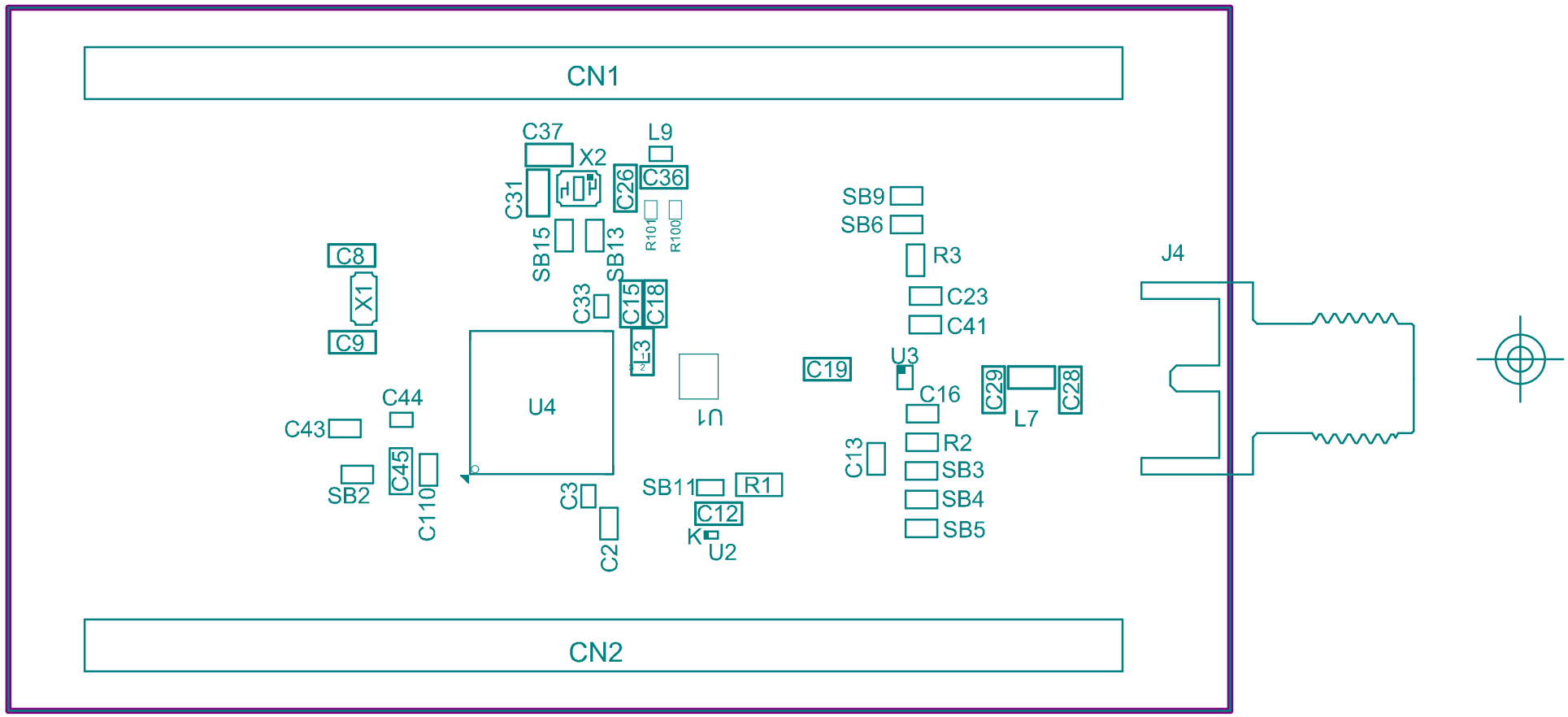

Project: STM32WL_QFN48_IPD_2Layers_LowPower	
Layer: Top Assembly	Gerber: .GM14
Variant: [No Variations]	Ref: MB1874_LP
Date: 20/07/2022	Rev: A

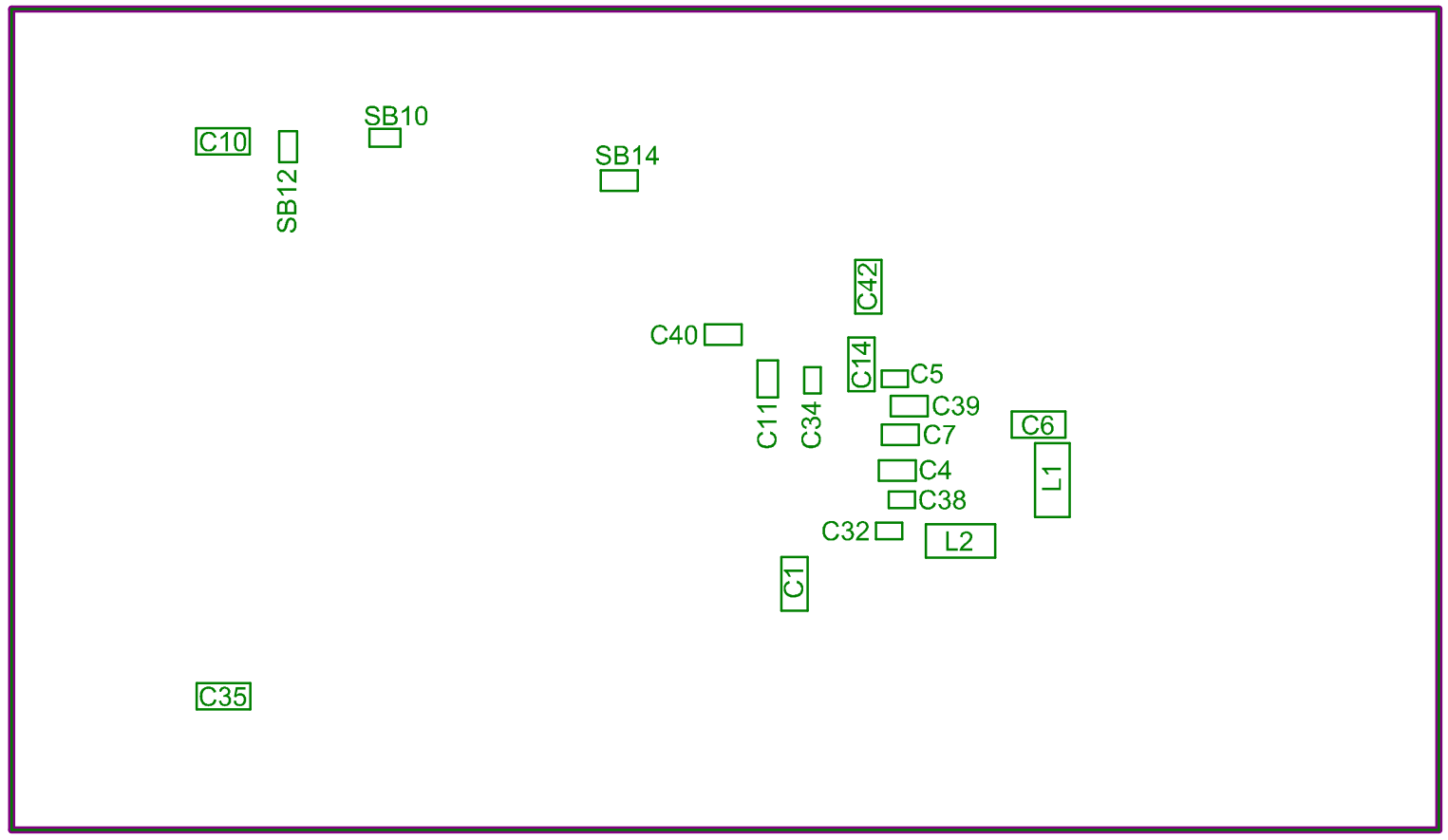

Project: STM32WL_QFN48_IPD_2Layers_LowPower	
Layer: Bottom Assembly	Gerber:.GM15
Variant: [No Variations]	Ref: MB1874_LP
Date: 20/07/2022	Rev: A

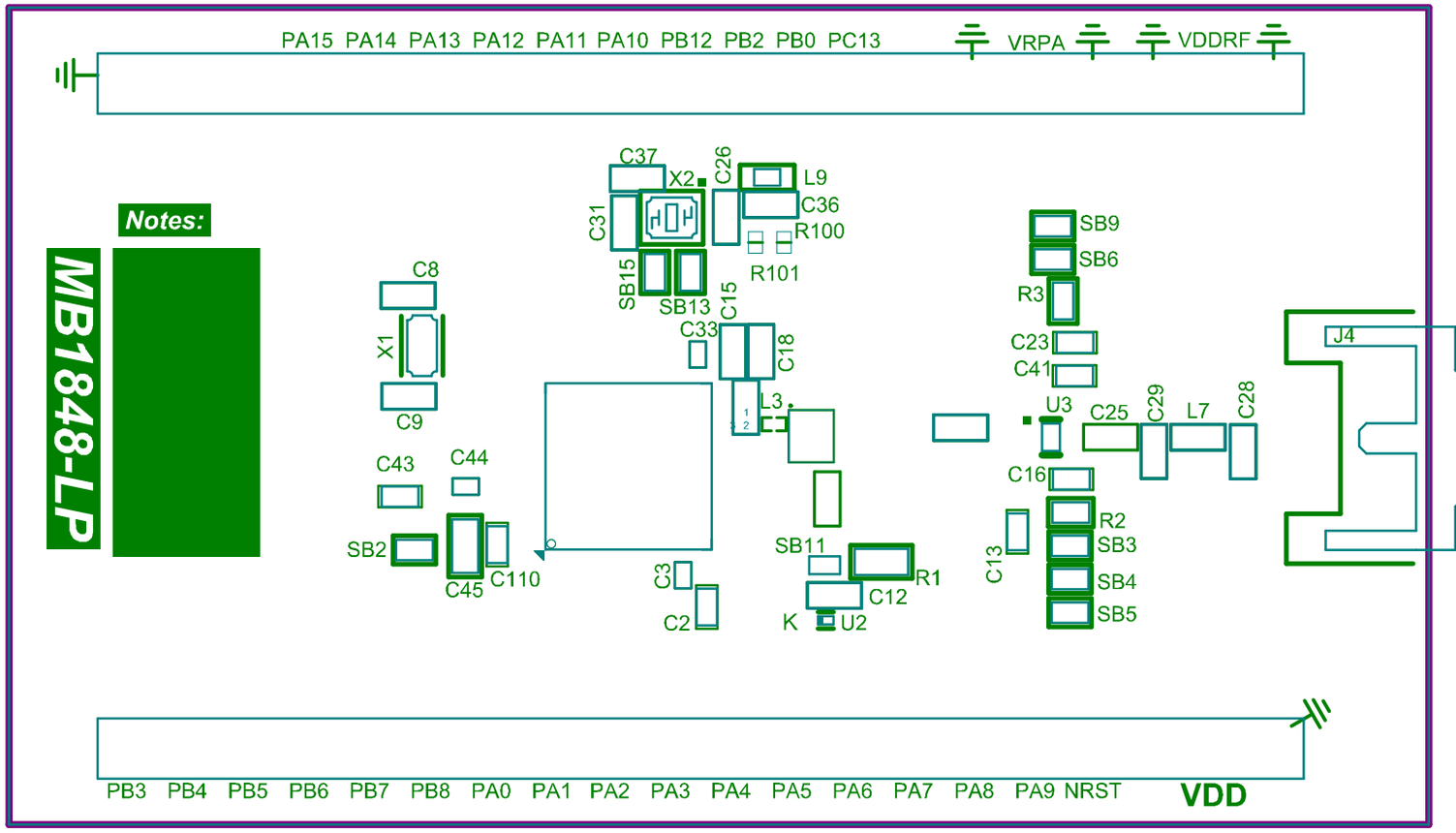

Top Assembly

.GTO

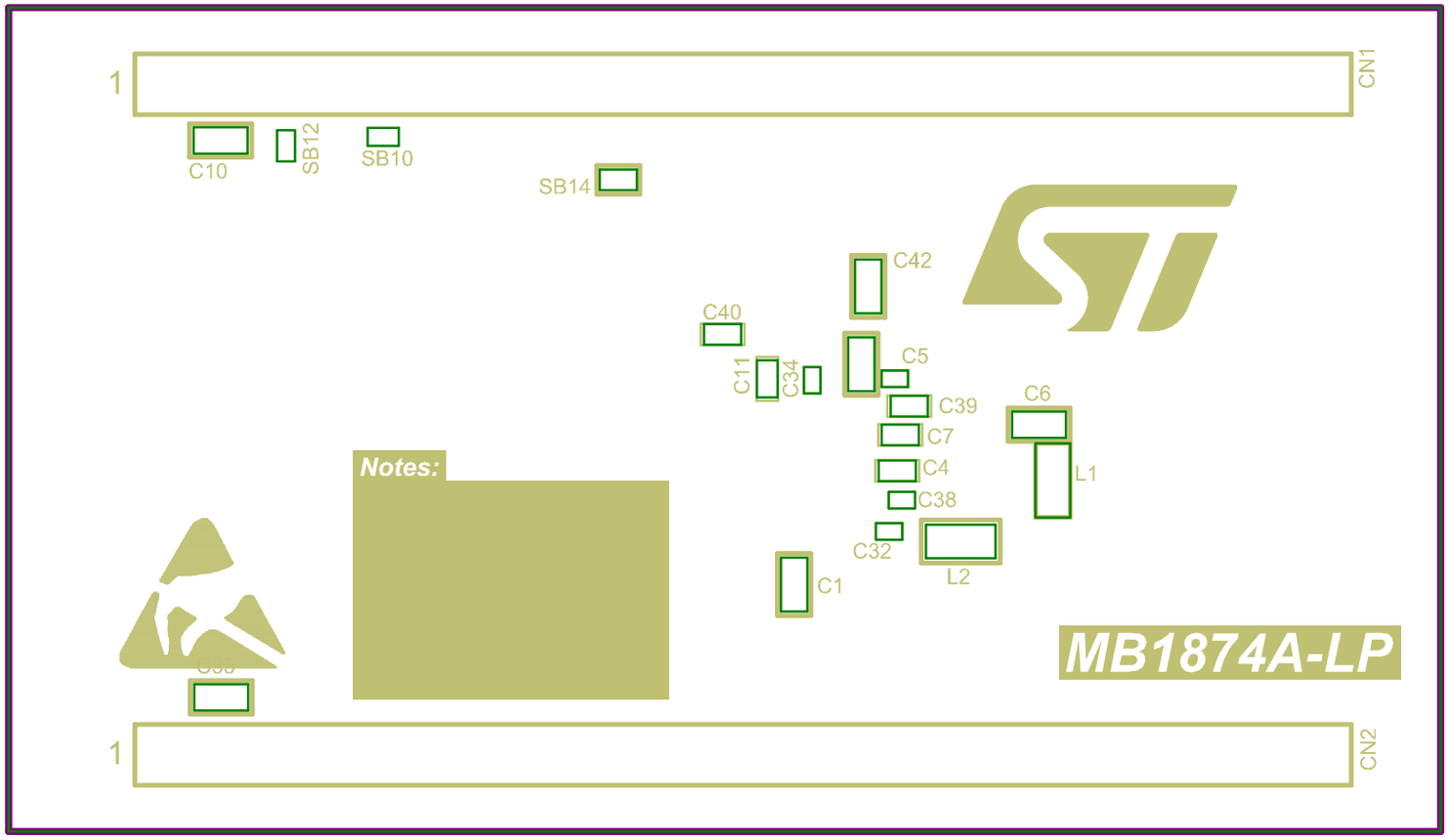

Bottom Assembly .GM15