MiniBoard_WBA5x_QFN48_LDO_PCBAntenna

MB1863

Table of contents

Sheet 1: Project overview (this page)

Sheet 2: Top

Sheet 3: STM32 microcontroller I/Os & Clock

Sheet 4: RF & Power Management

Legend

General comment such as function title, configuration, ...

Text to be added to silkscreen.

Warning text.

Notes to generate the board layout.

Open Platform License Agreement

The Open Platform License Agreement (“Agreement”) is a binding legal contract between you ("You") and STMicroelectronics International N.V. (“ST”), a company incorporated under the laws of the Netherlands acting for the purpose of this Agreement through its Swiss branch 39, Chemin du Champ des Filles, 1228 Plan-les-Ouates, Geneva, Switzerland.

By using the enclosed reference designs, schematics, PC board layouts, and documentation, in hardcopy or CAD tool file format (collectively, the “Reference Material”), You are agreeing to be bound by the terms and conditions of this Agreement. Do not use the Reference Material until You have read and agreed to this Agreement terms and conditions. The use of the Reference Material automatically implies the acceptance of the Agreement terms and conditions.

The complete Open Platform License Agreement can be found on www.st.com/opla.

U_Top
Top.SchDoc

HW2
PCB
MB1863

HW3
STICKER BOARD
Sticker board

HW4
STICKER PRODUCT
Sticker product

Title: **Project Overview**		
Project: **MiniBoard_WBA5x_QFN48_LDO_PCBAntenna**		
Variant: WBA52CGA		
Revision: A-03		Reference: MB1863
Size: A4	Date: 02-Aug-2022	Sheet: 1 of 4

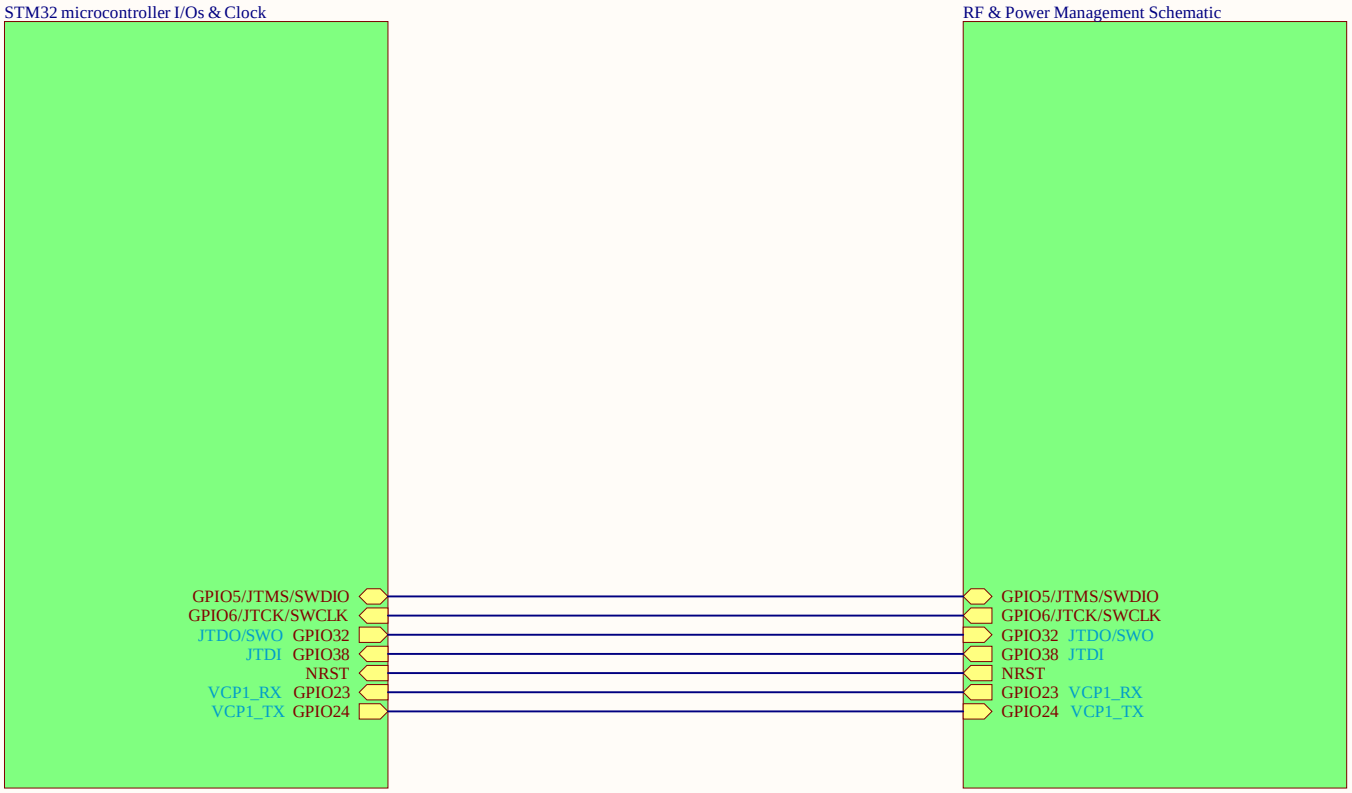

Title: **Top Schematic**		
Project: **MiniBoard_WBA5x_QFN48_LDO_PCBAntenna**		
Variant: WBA52CGA		
Revision: A-03		Reference: MB1863
Size: A4	Date: 02-Aug-2022	Sheet: 2 of 4

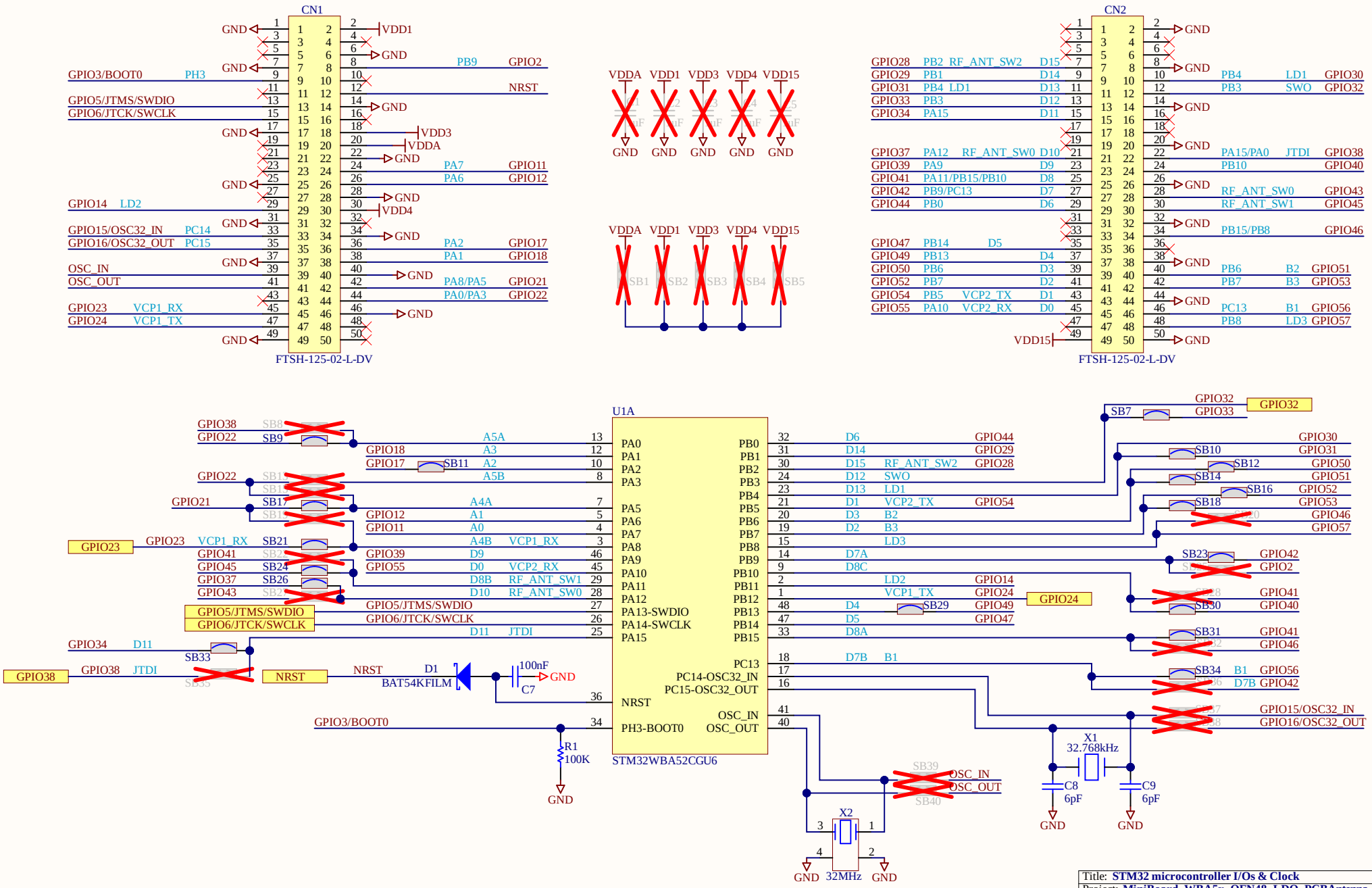

Title: **STM32 microcontroller I/Os & Clock**	
Project: **MiniBoard_WBA5x_QFN48_LDO_PCBAntenna**	
Variant: WBA52CGA	
Revision: A-03	Reference: MB1863
Size: A4 Date: 02-Aug-2022	Sheet: 3 of 4

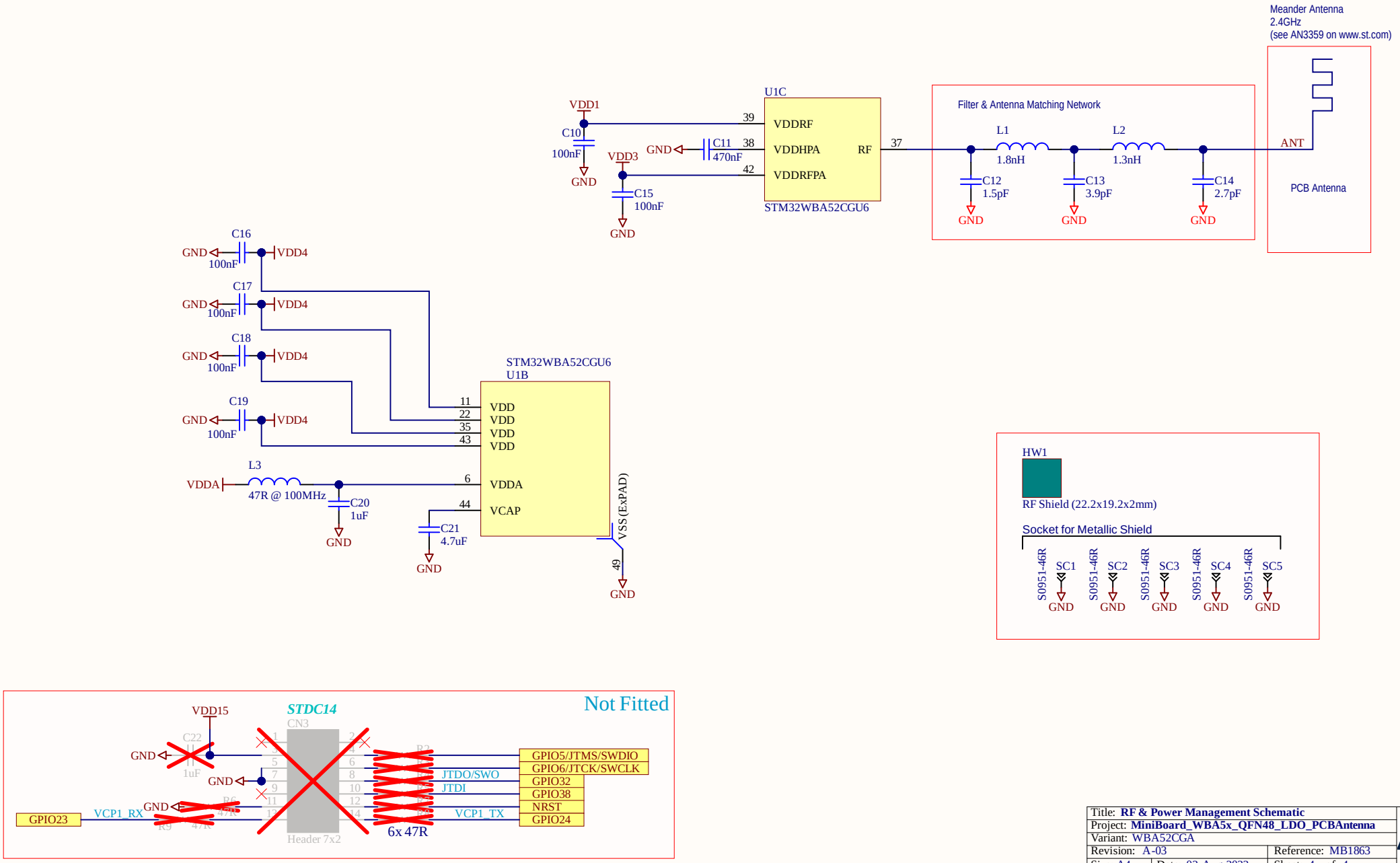

Title: **RF & Power Management Schematic**		
Project: **MiniBoard_WBA5x_QFN48_LDO_PCBAntenna**		
Variant: WBA52CGA		
Revision: A-03		Reference: MB1863
Size: A4	Date: 02-Aug-2022	Sheet: 4 of 4

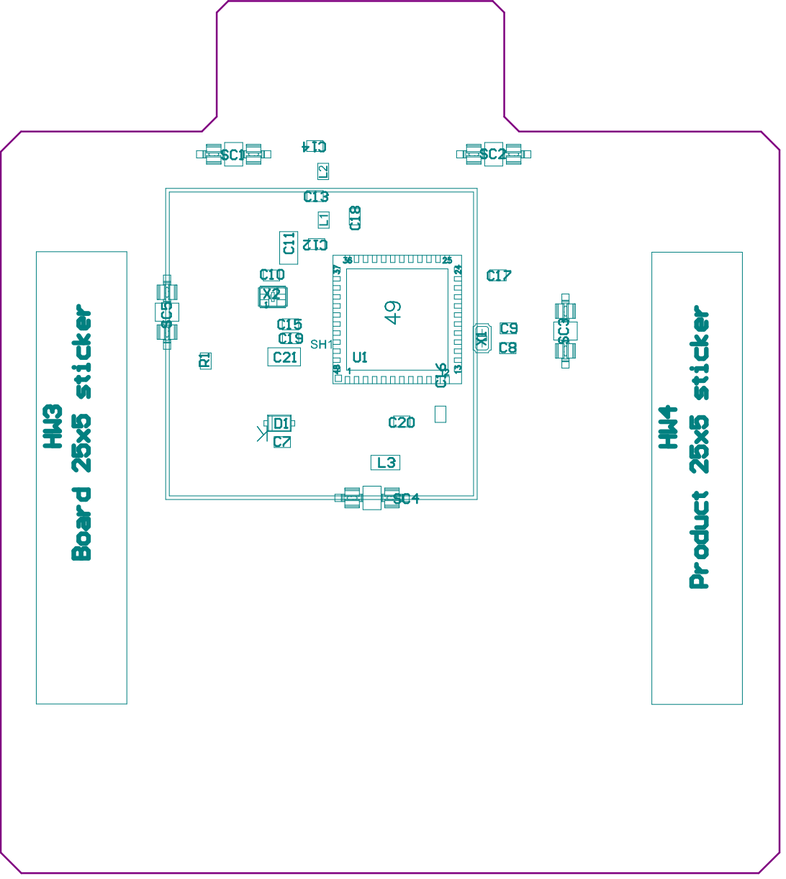

Project: MiniBoard_WBA5x_QFN48_LDO_PCBAntenna	
Layer: M14-Top Assembly	Gerber: .GM14
Variant: WBA52CGA	Ref: MB1863
Date: 02-Aug-2022	Rev: A

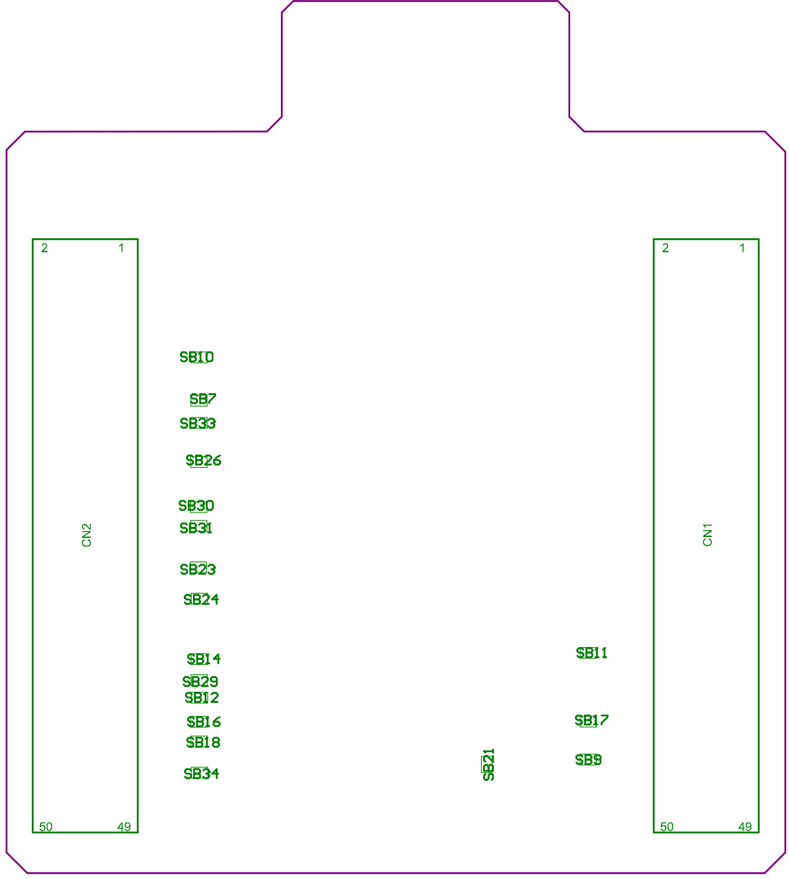

Project: MiniBoard_WBA5x_QFN48_LDO_PCBAntenna	
Layer: M15-Bottom Assembly	Gerber:.GM15
Variant: WBA52CGA	Ref: MB1863
Date: 02-Aug-2022	Rev: A

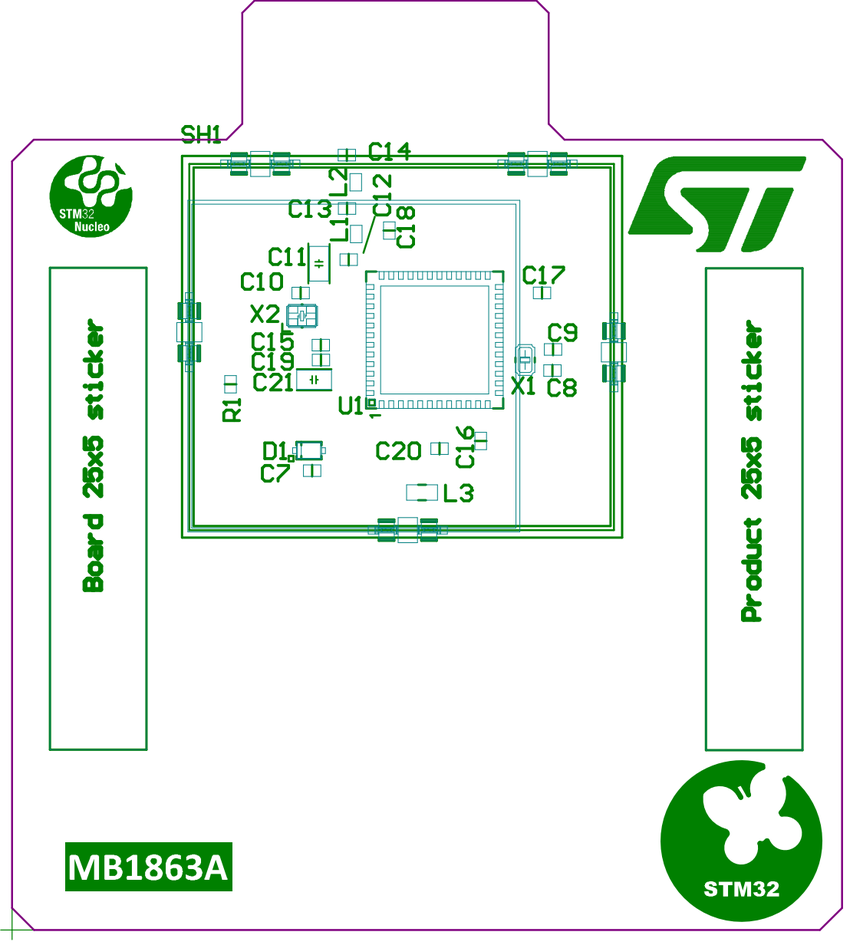

Top Overlay .GTO

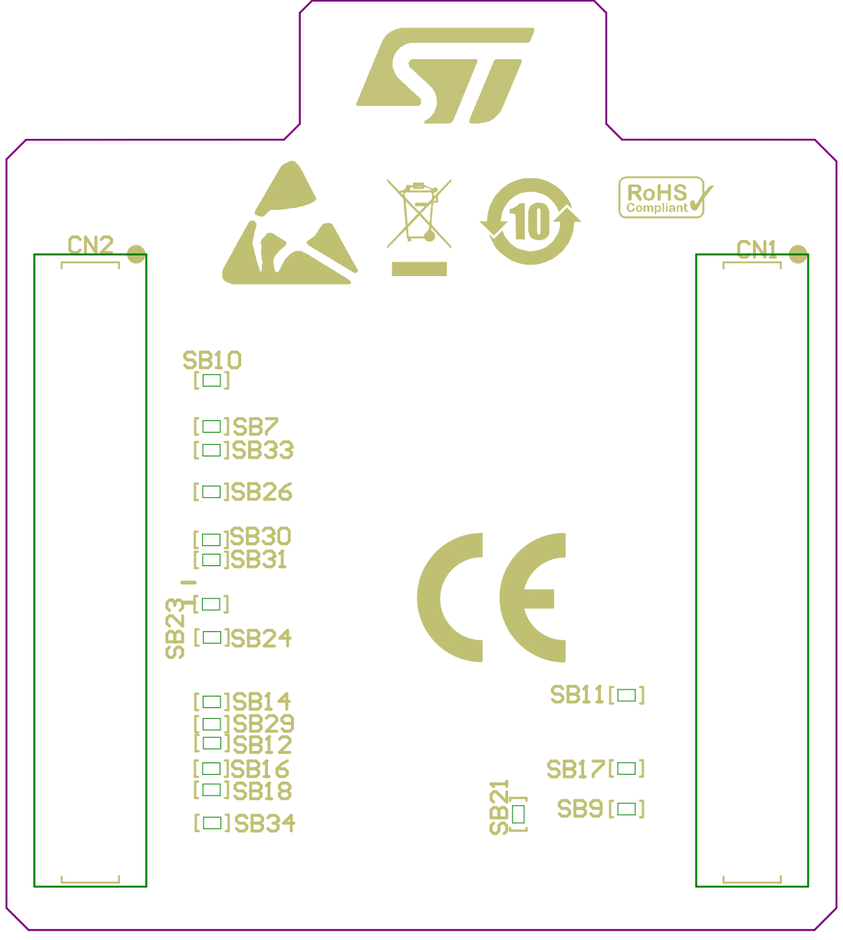

Bottom Overlay .GBO