STM32WL_BGA73_IPD_4Layers_IPD_TX_LowPower

MB1849_LP

Table of contents

Sheet 1: Project overview (this page)

Sheet 2: Reference_Design_STM32WL_4L_IPD_ST_V2_LP

Legend

General comment such as function title, configuration, ...

Text to be added to silkscreen.

Warning text.

Notes to generate the board layout.

Open Platform License Agreement

The Open Platform License Agreement (“Agreement”) is a binding legal contract between you ("You") and STMicroelectronics International N.V. (“ST”), a company incorporated under the laws of the Netherlands acting for the purpose of this Agreement through its Swiss branch 39, Chemin du Champ des Filles, 1228 Plan-les-Ouates, Geneva, Switzerland.

By using the enclosed reference designs, schematics, PC board layouts, and documentation, in hardcopy or CAD tool file format (collectively, the “Reference Material”), You are agreeing to be bound by the terms and conditions of this Agreement. Do not use the Reference Material until You have read and agreed to this Agreement terms and conditions. The use of the Reference Material automatically implies the acceptance of the Agreement terms and conditions.

The complete Open Platform License Agreement can be found on www.st.com/opla.

U_Top
STM32WL_BGA73_RefBoard_IPD_LP.SchDoc

Title: **Schematic sheet title to update**		
Project: **STM32WL_BGA73_IPD_4Layers_IPD_TX_LowPow**		
Variant: [No Variations]		
Revision: A-01		Reference: MB1849_LP
Size: A4	Date: 25/07/2022	Sheet: 1 of 2

STM32WL BGA IPD - Low Power Mode - Reference Board

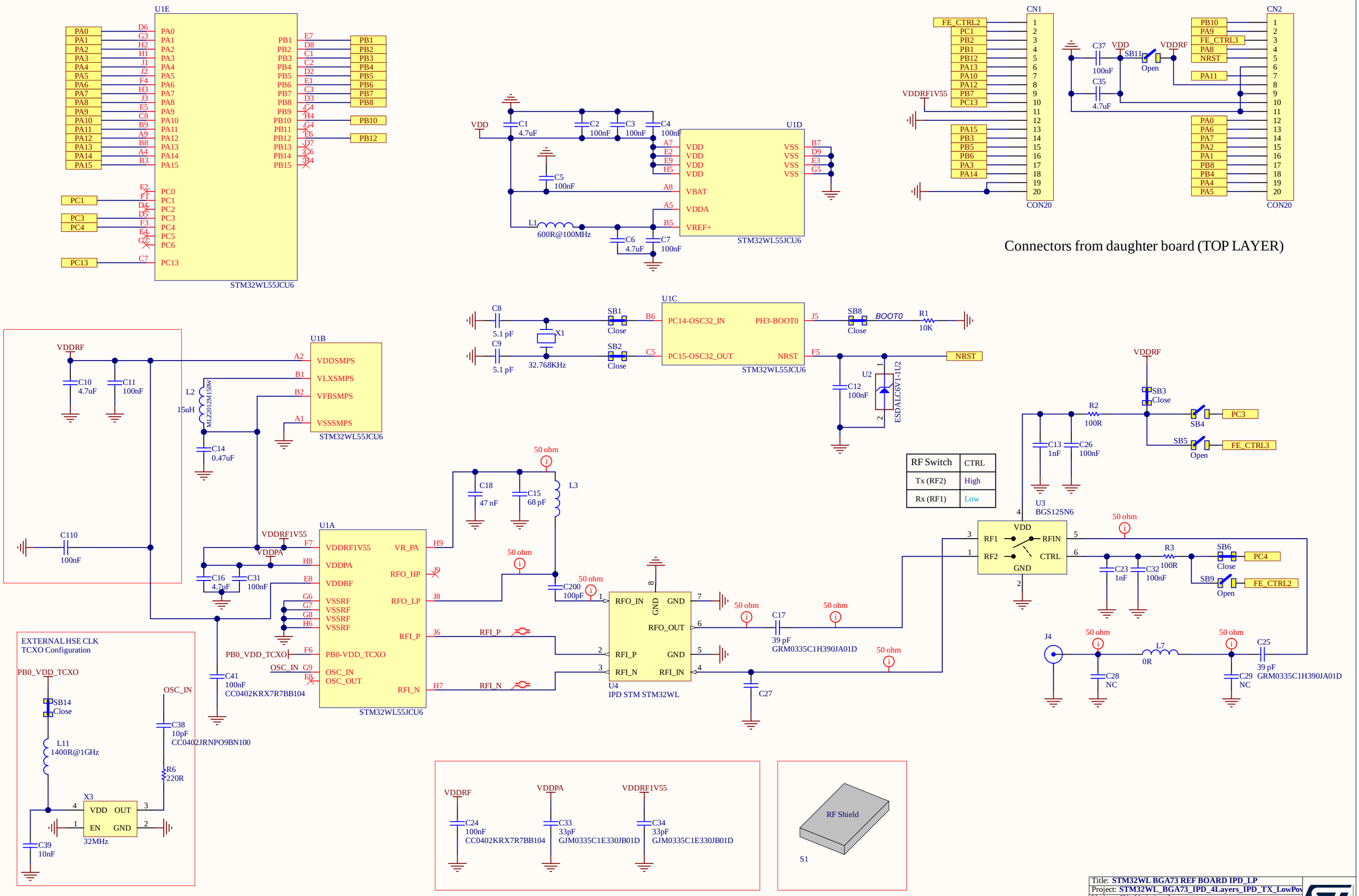

Title: STM32WL BGA73 REF BOARD IPD_LP	
Project: STM32WL_BGA73_IPD_4Layers_IPD_TX_LowPow	
Variant: [No Variations]	
Revision: A-01	Reference: MB1849_LP
Size: A3 Date: 25/07/2022	Sheet: 2 of 2

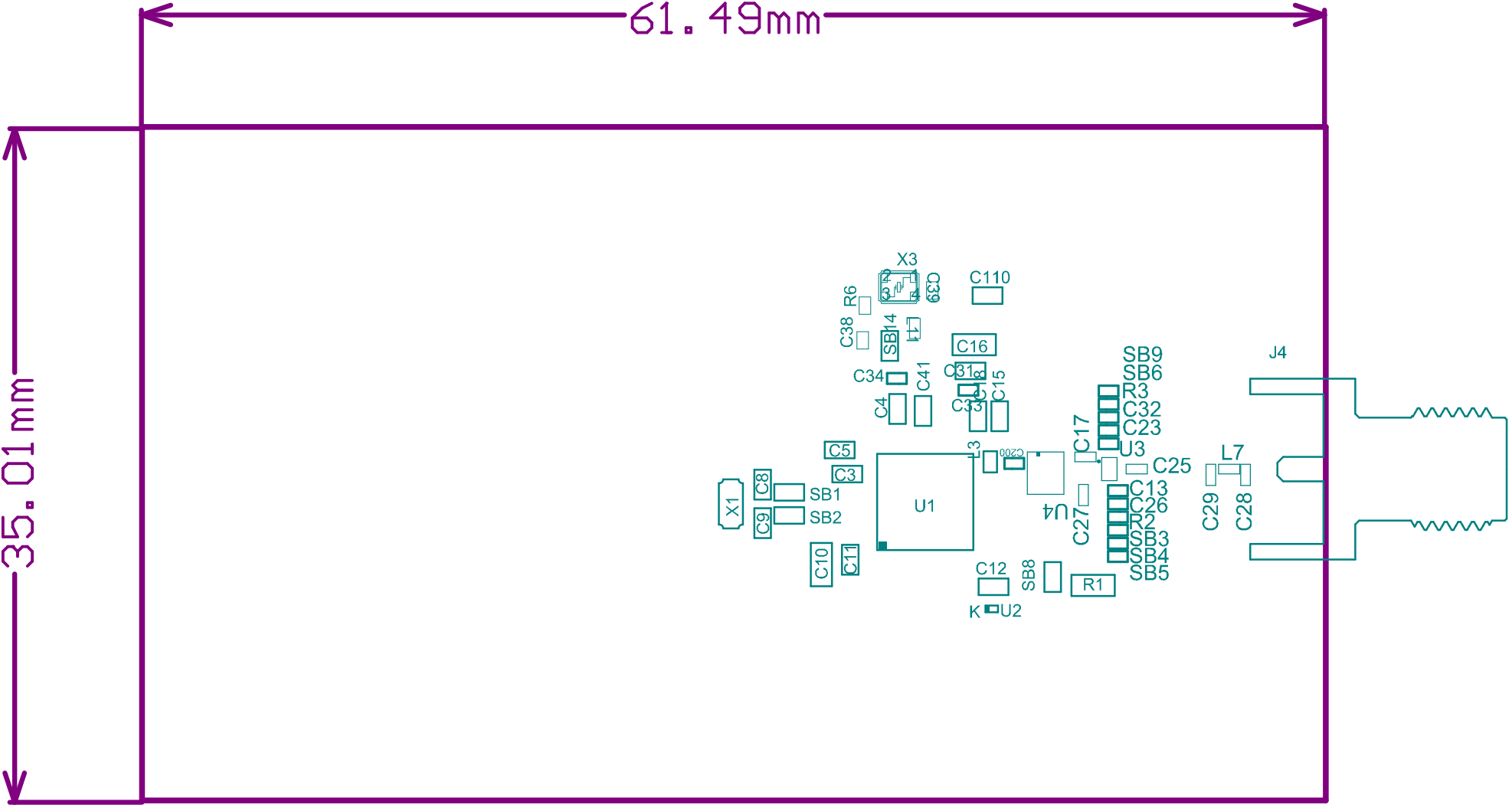

Project: STM32WL_BGA73_IPD_4Layers_IPD_TX_LowPower	
Layer: Top Assembly	Gerber: .GM14
Variant: [No Variations]	Ref: MB1849_LP
Date: 25/07/2022	Rev: A

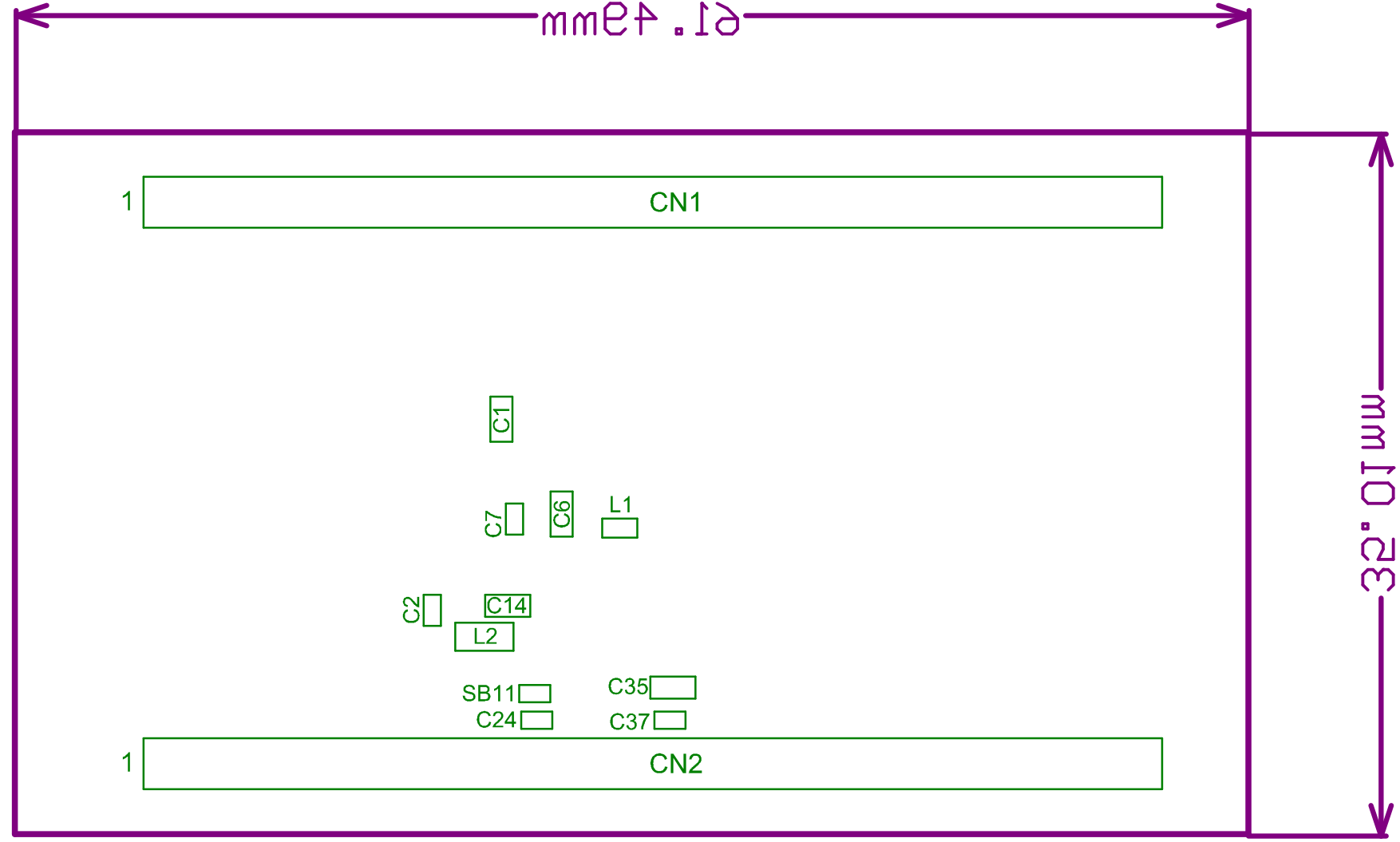

Project: STM32WL_BGA73_IPD_4Layers_IPD_TX_LowPower	
Layer: Bottom Assembly	Gerber:.GM15
Variant: [No Variations]	Ref: MB1849_LP
Date: 25/07/2022	Rev: A

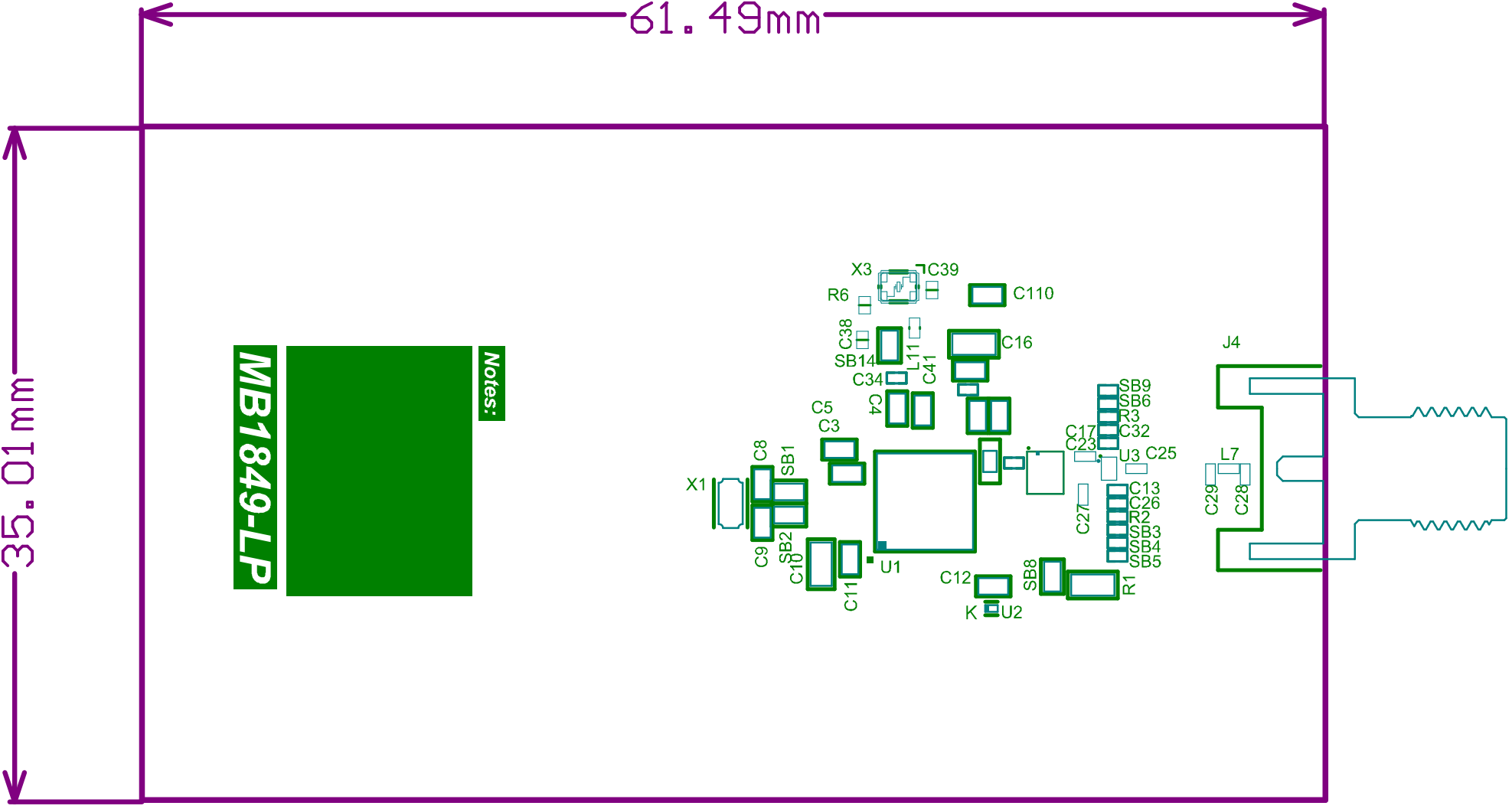

Top Assembly

Top Assembly

.GTO

.GTO

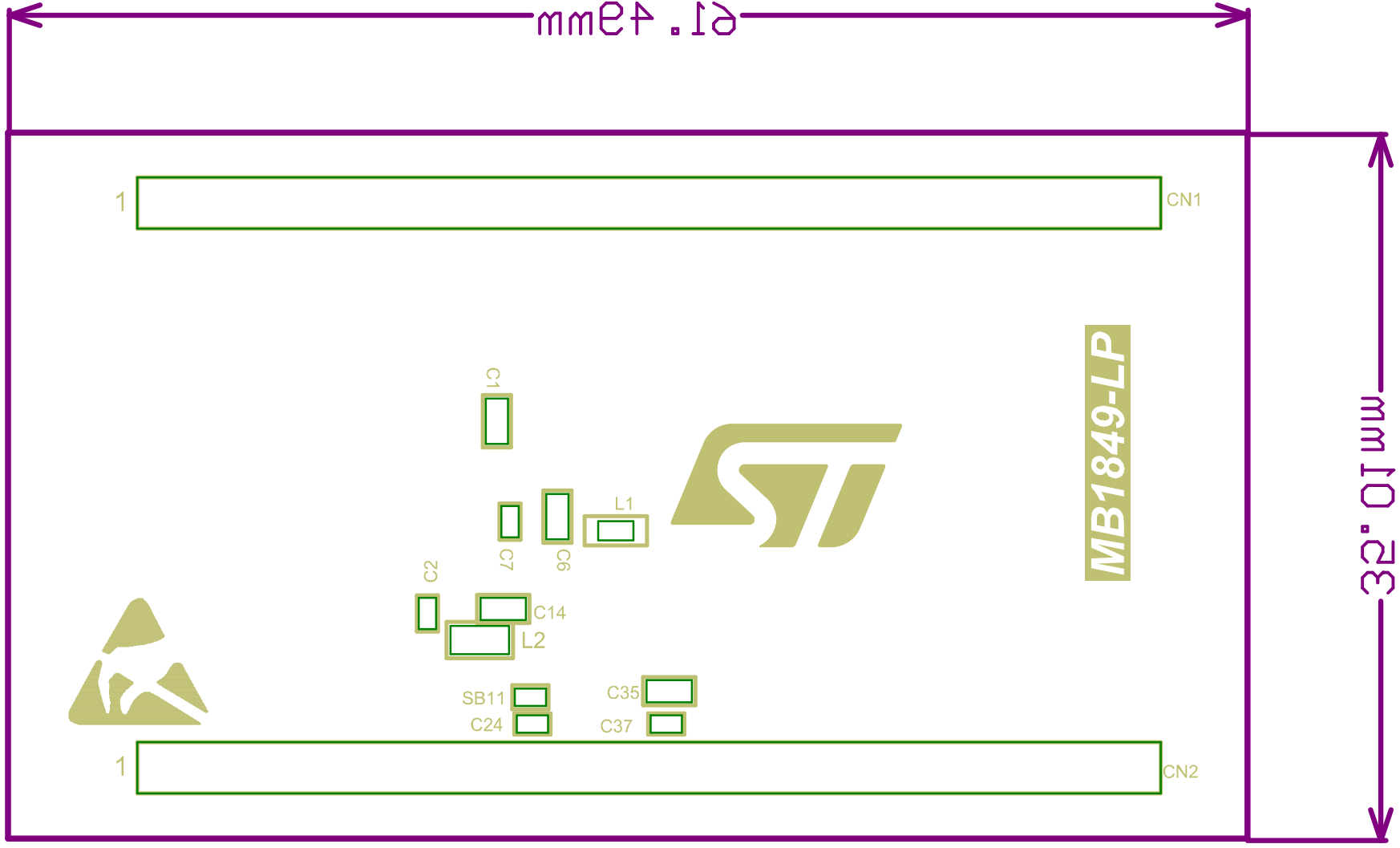

Bottom Assembly .GM15