NUCLEO-64

MB1814

Table of contents

Sheet 1: Project overview (this page)

Sheet 2: Top

Sheet 3: STM32_microcontroller_IOs

Sheet 4: STM32_microcontroller_power

Sheet 5: Board Power

Sheet 6: Connectors

Sheet 7: User USB

Sheet 8: STLINK-V3EC

U_Top
Top.SchDoc

Legend

General comment such as function title, configuration, ...

Text to be added to silkscreen.

Warning text.

Notes to generate the board layout.

OPEN PLATFORM LICENSE AGREEMENT

The Open Platform License Agreement (“Agreement”) is a binding legal contract between you ("You") and STMicroelectronics International N.V. (“ST”), a company incorporated under the laws of the Netherlands acting for the purpose of this Agreement through its Swiss branch 39, Chemin du Champ des Filles, 1228 Plan-les-Ouates, Geneva, Switzerland.

By using the enclosed reference designs, schematics, PC board layouts, and documentation, in hardcopy or CAD tool file format (collectively, the “Reference Material”), You are agreeing to be bound by the terms and conditions of this Agreement. Do not use the Reference Material until You have read and agreed to this Agreement terms and conditions. The use of the Reference Material automatically implies the acceptance of the Agreement terms and conditions.

The complete Open Platform License Agreement can be found on www.st.com/opla.

Title: **Project overview**		
Project: **NUCLEO-64**		
Variant: H533RE		
Revision: C-02		Reference: MB1814
Size: A4	Date: 06-FEB-2024	Sheet: 1 of 8

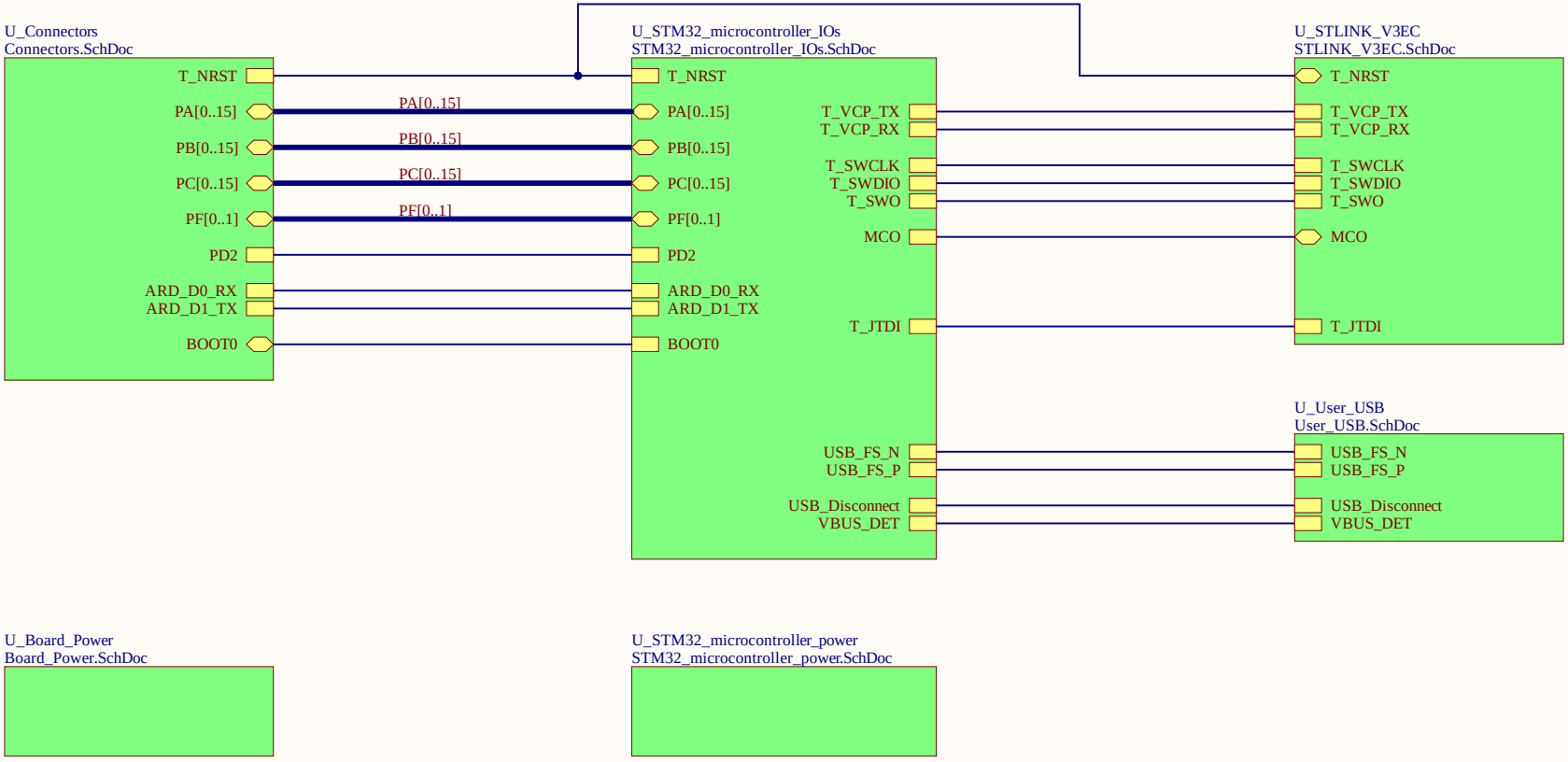

Title: **Top**		
Project: **NUCLEO-64**		
Variant: H533RE		
Revision: C-02		Reference: MB1814
Size: A4	Date: 06-FEB-2024	Sheet: 2 of 8

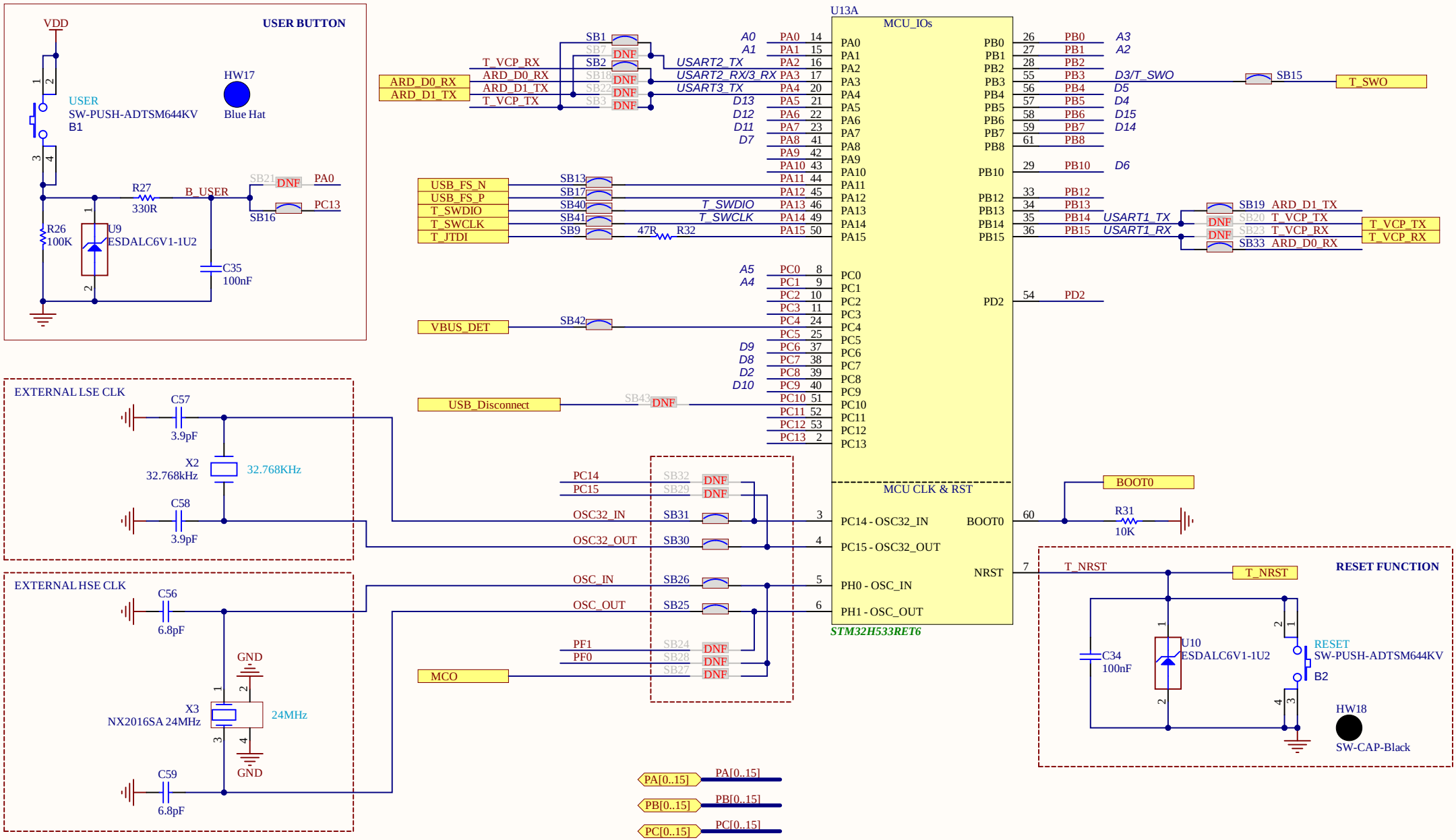

Title: **STM32_microcontroller_I/Os**		
Project: **NUCLEO-64**		
Variant: H533RE		
Revision: C-02		Reference: MB1814
Size: A4	Date: 06-FEB-2024	Sheet: 3 of 8

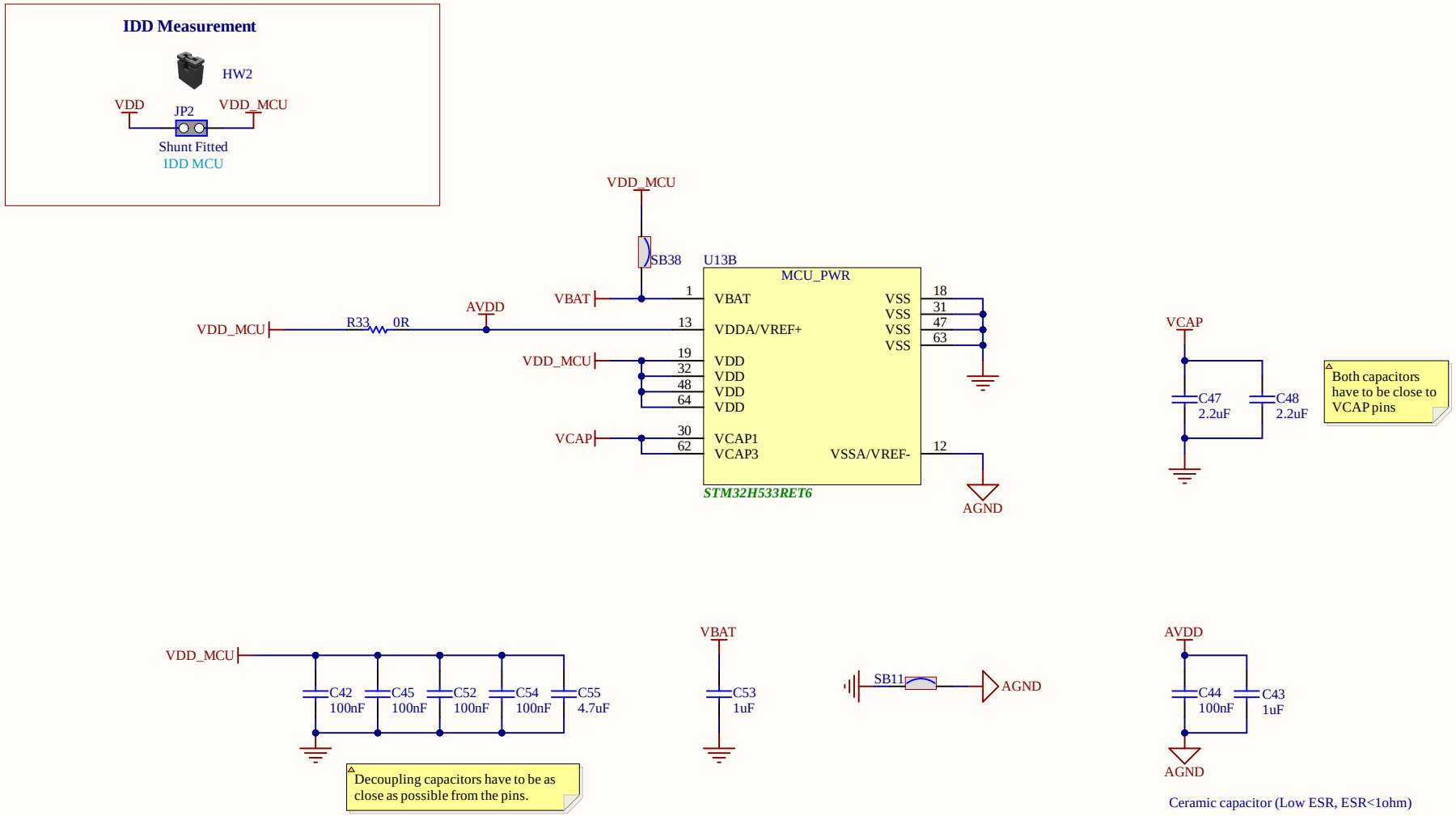

Title: **STM32_microcontroller_power**		
Project: **NUCLEO-64**		
Variant: H533RE		
Revision: C-02		Reference: MB1814
Size: A4	Date: 06-FEB-2024	Sheet: 4 of 8

VIN / 5V POWER

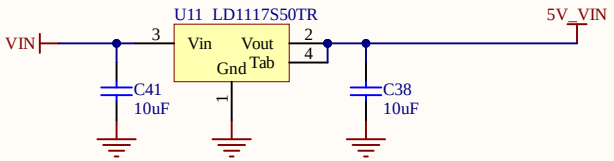

5V POWER SOURCE SELECTION

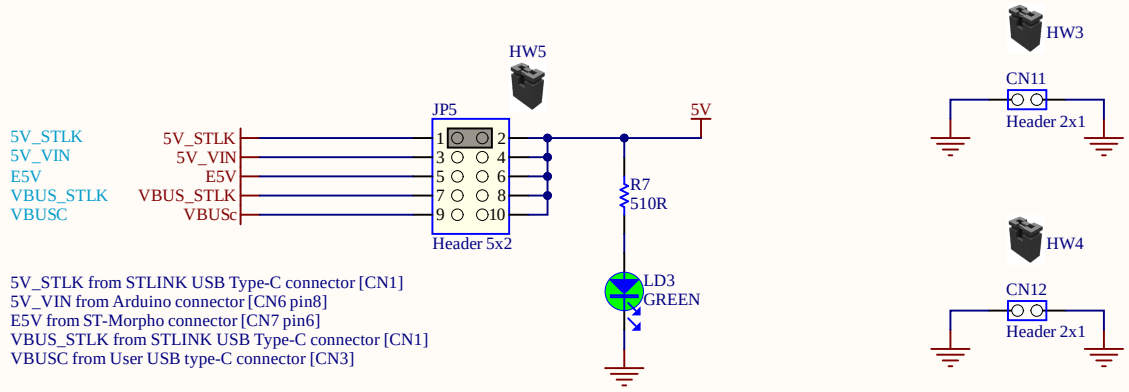

VDD POWER
3V3 - 1A max

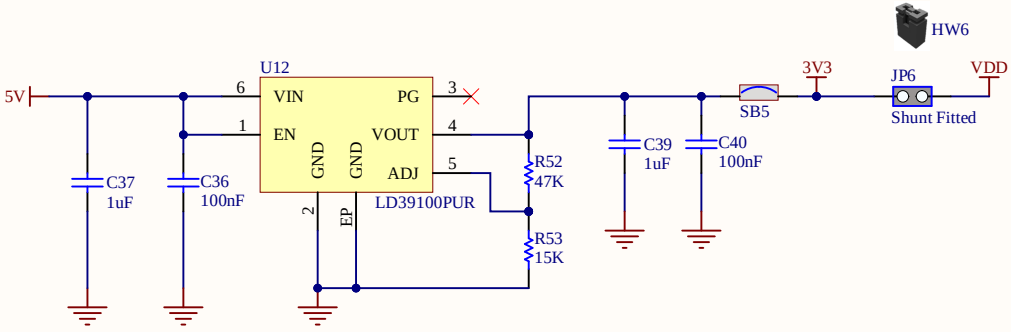

Title: **Board power**		
Project: **NUCLEO-64**		
Variant: H533RE		
Revision: C-02		Reference: MB1814
Size: A4	Date: 06-FEB-2024	Sheet: 5 of 8

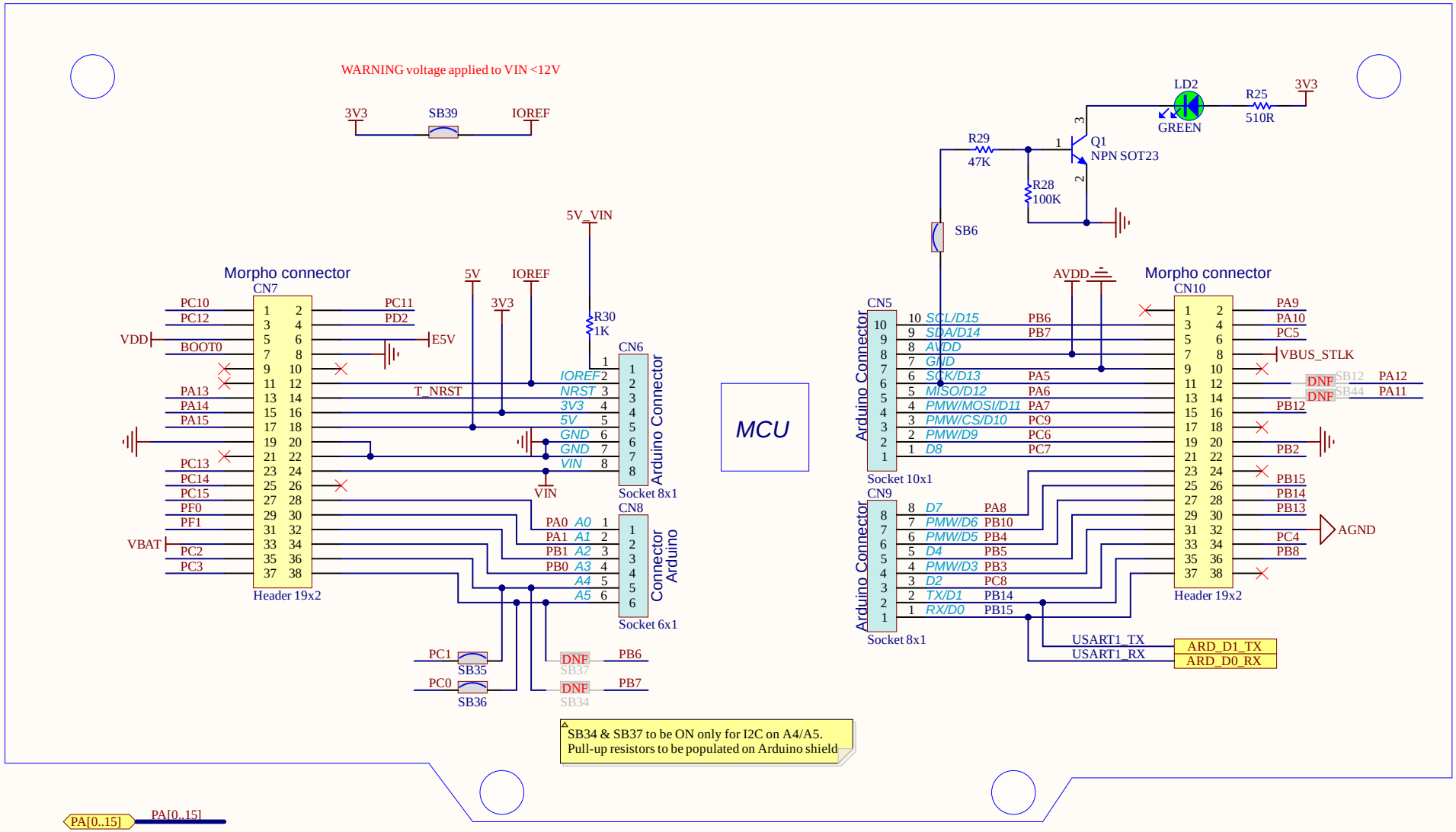

Title: **Connectors**		
Project: **NUCLEO-64**		
Variant: H533RE		
Revision: C-02		Reference: MB1814
Size: A4	Date: 06-FEB-2024	Sheet: 6 of 8

USER USB

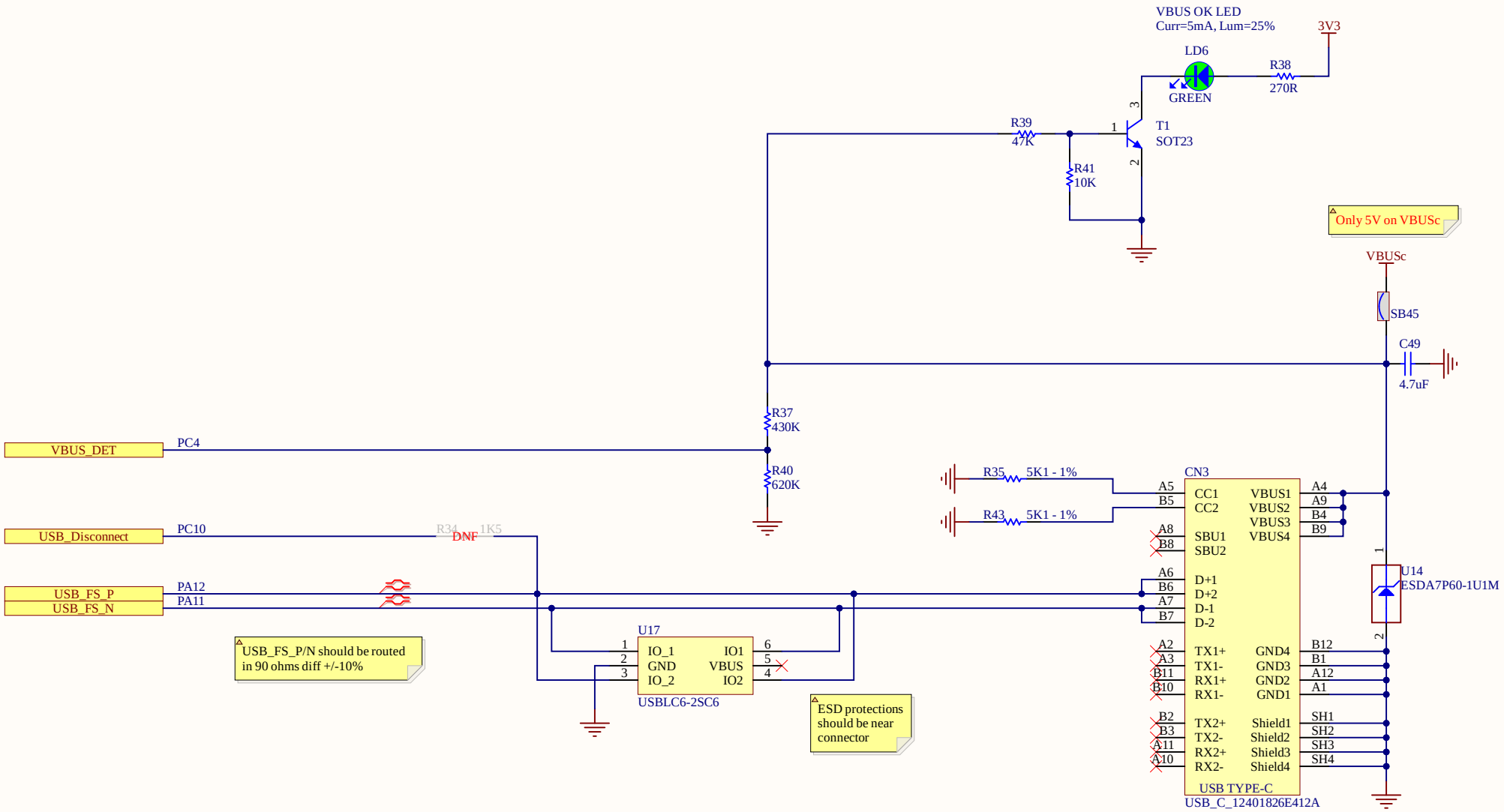

Title: **User_USB**		
Project: **NUCLEO-64**		
Variant: H533RE		
Revision: C-02		Reference: MB1814
Size: A4	Date: 06-FEB-2024	Sheet: 7 of 8

ST-LINK USB CONNECTOR

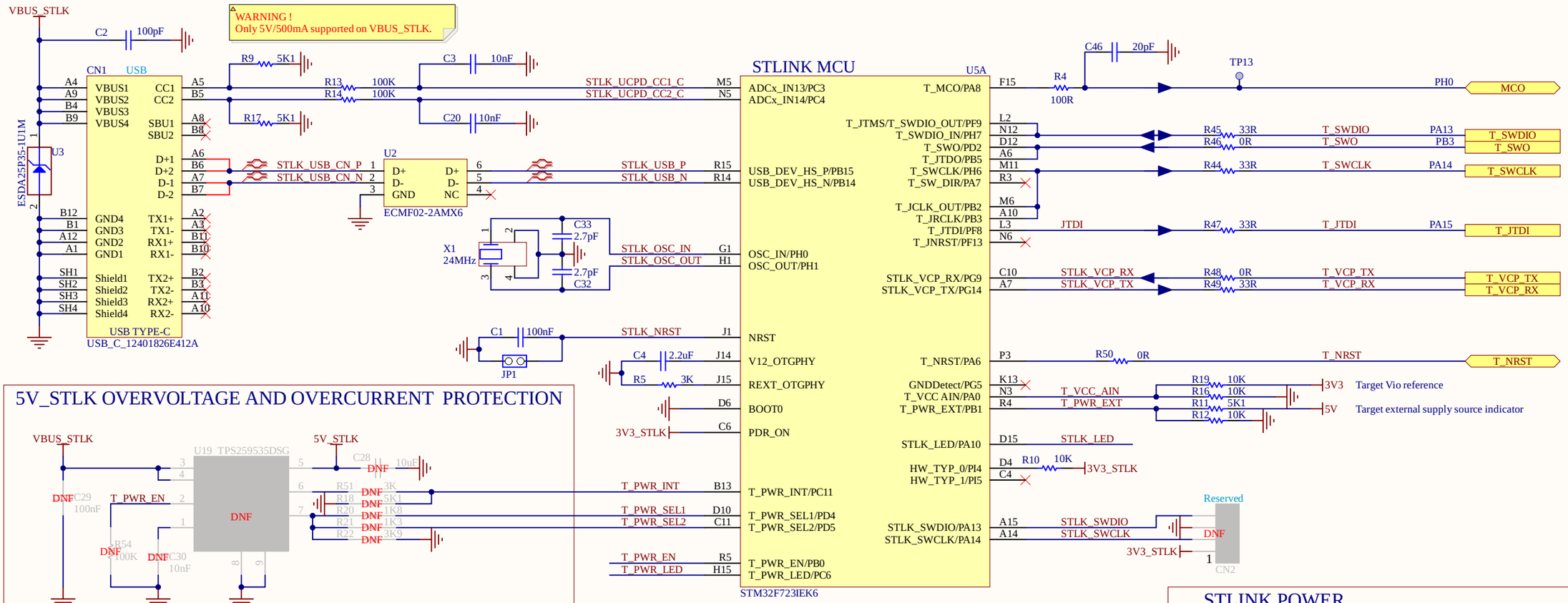

5V_STLK OVERVOLTAGE AND OVERCURRENT PROTECTION

5V_STLK OVERCURRENT PROTECTION MANAGMENT

	T_PWR_SEL2/PD5	T_PWR_SEL1/PD4
PowerDefault SNK *(Current limit: 550mA)*	Hi-Z	Hi-Z
Power1.5.SNK *(Current limit: 1.66A)*	Hi-Z	0
Power3.0.SNK *(Current limit: 3.2A)*	0	0

HZ= IO set in high impedance

ST-LINK POWER (3V3/300mA)

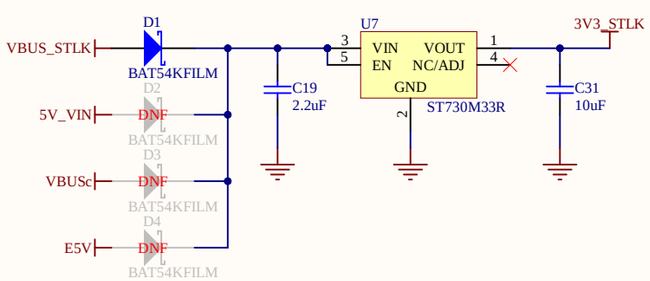

5V ST-LINK PROTECTION for legacy

STMPS2151STR is backup of the TPS259535DSG

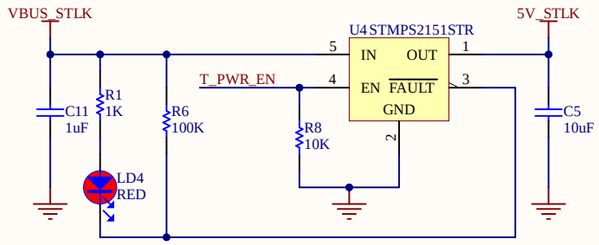

LED POWER STATUS

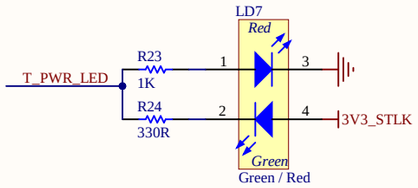

LED STLINK

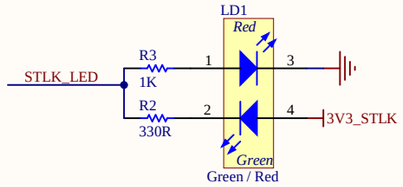

ESD PROTECTIONS

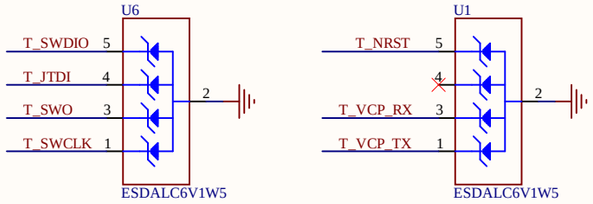

STLINK POWER

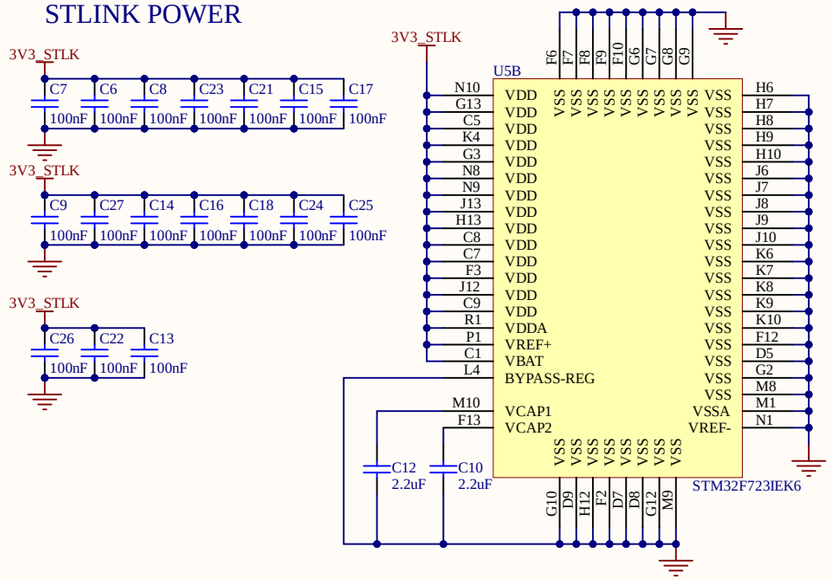

STDC14 RECEIVER

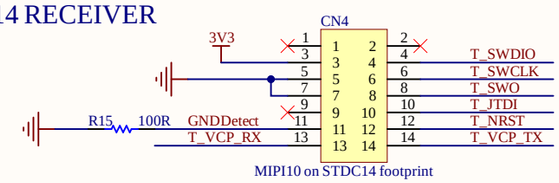

JP1 to be ON when an external probe is connected to the STDC14

Title: **STLINK_V3EC**		
Project: **NUCLEO-64**		
Variant: H533RE		
Revision: C-02		Reference: MB1814
Size: A3	Date: 06-FEB-2024	Sheet: 8 of 8

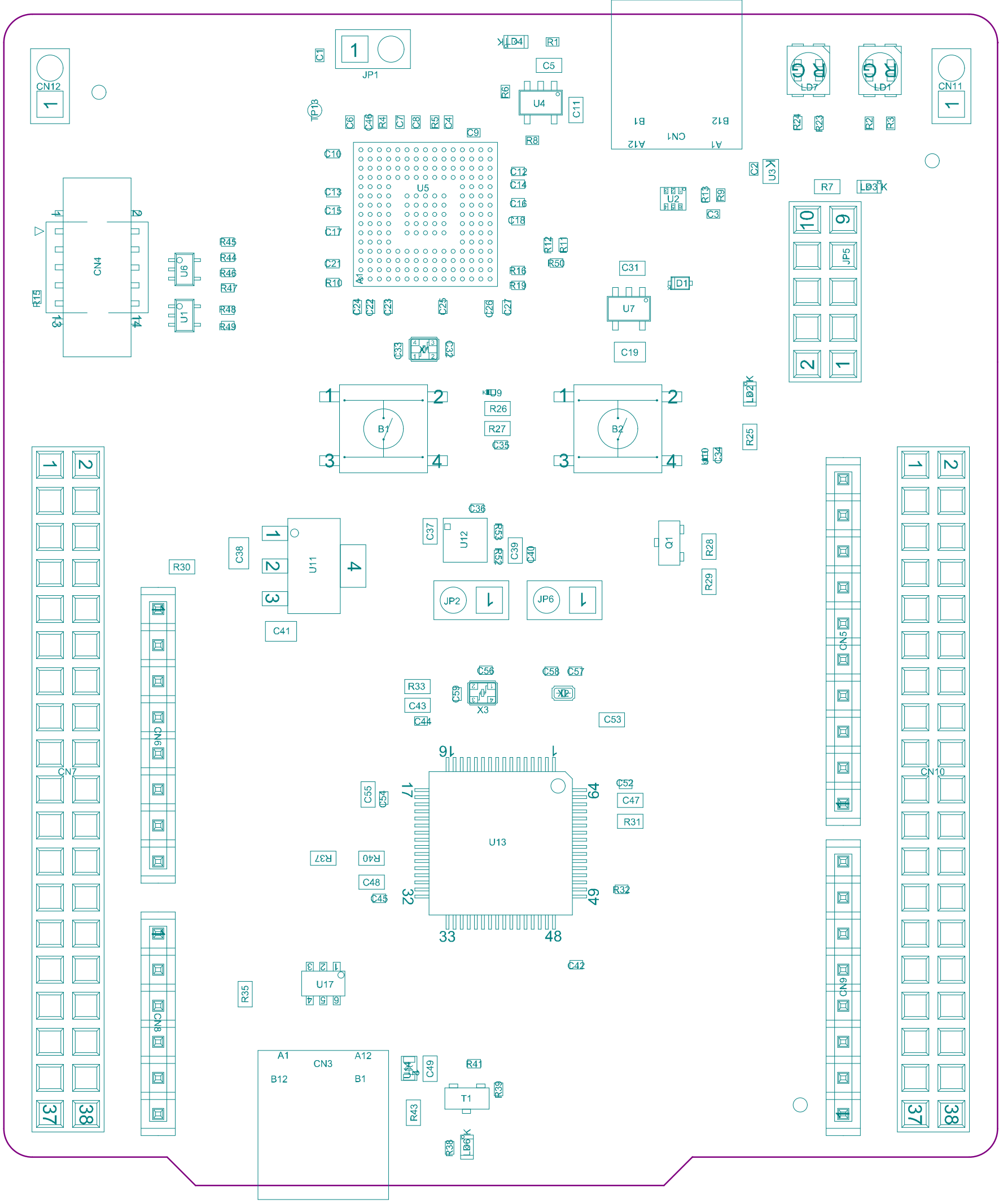

Project: NUCLEO-64	
Layer: M14-Top Assembly	Gerber: .GM14
Variant: H533RE	MB1814
Date: 06-FEB-2024	Rev: C

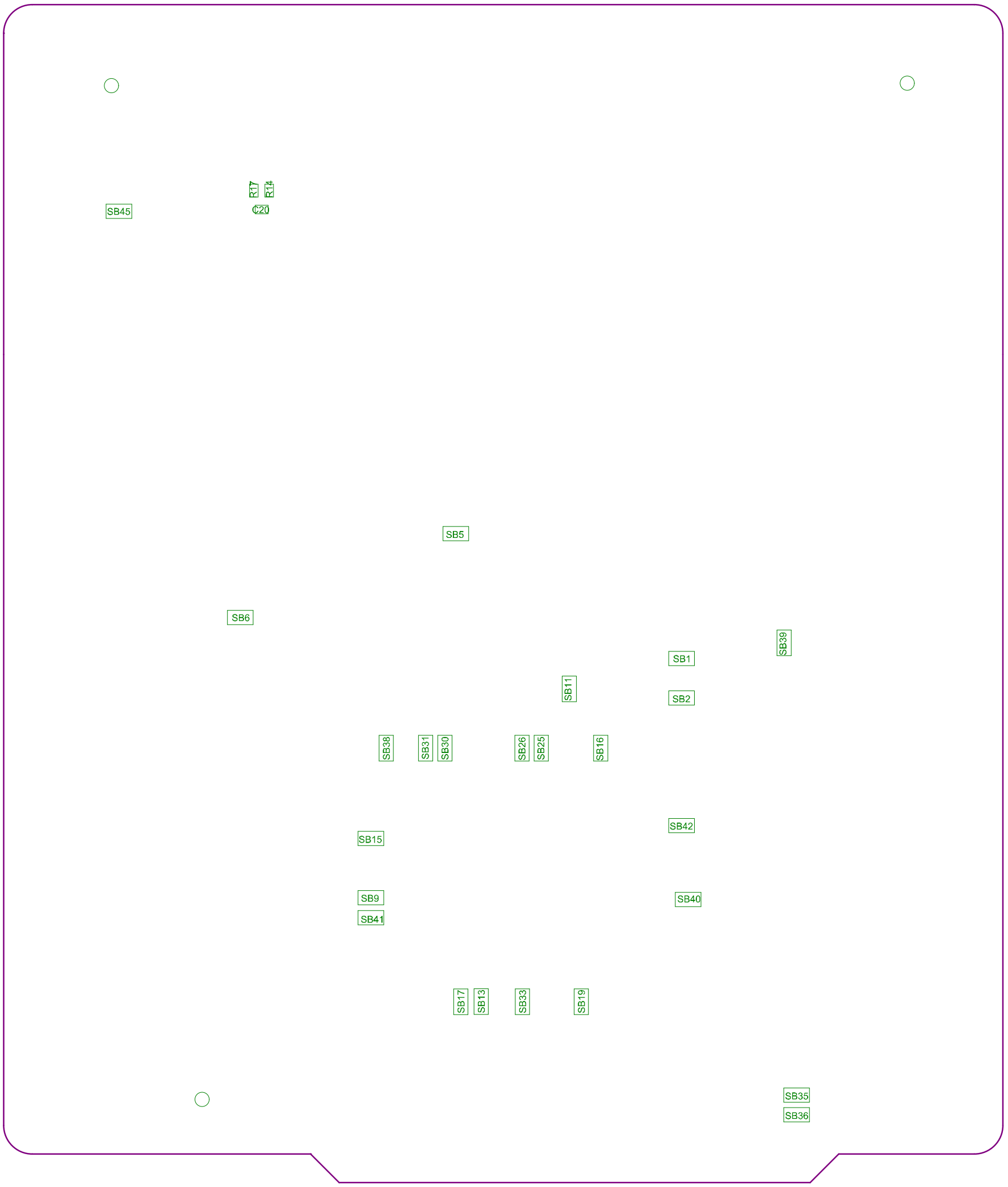

Project: NUCLEO-64	
Layer: M15-Bottom Assembly	Gerber:.GM15
Variant: H533RE	MB1814
Date: 06-FEB-2024	Rev: C

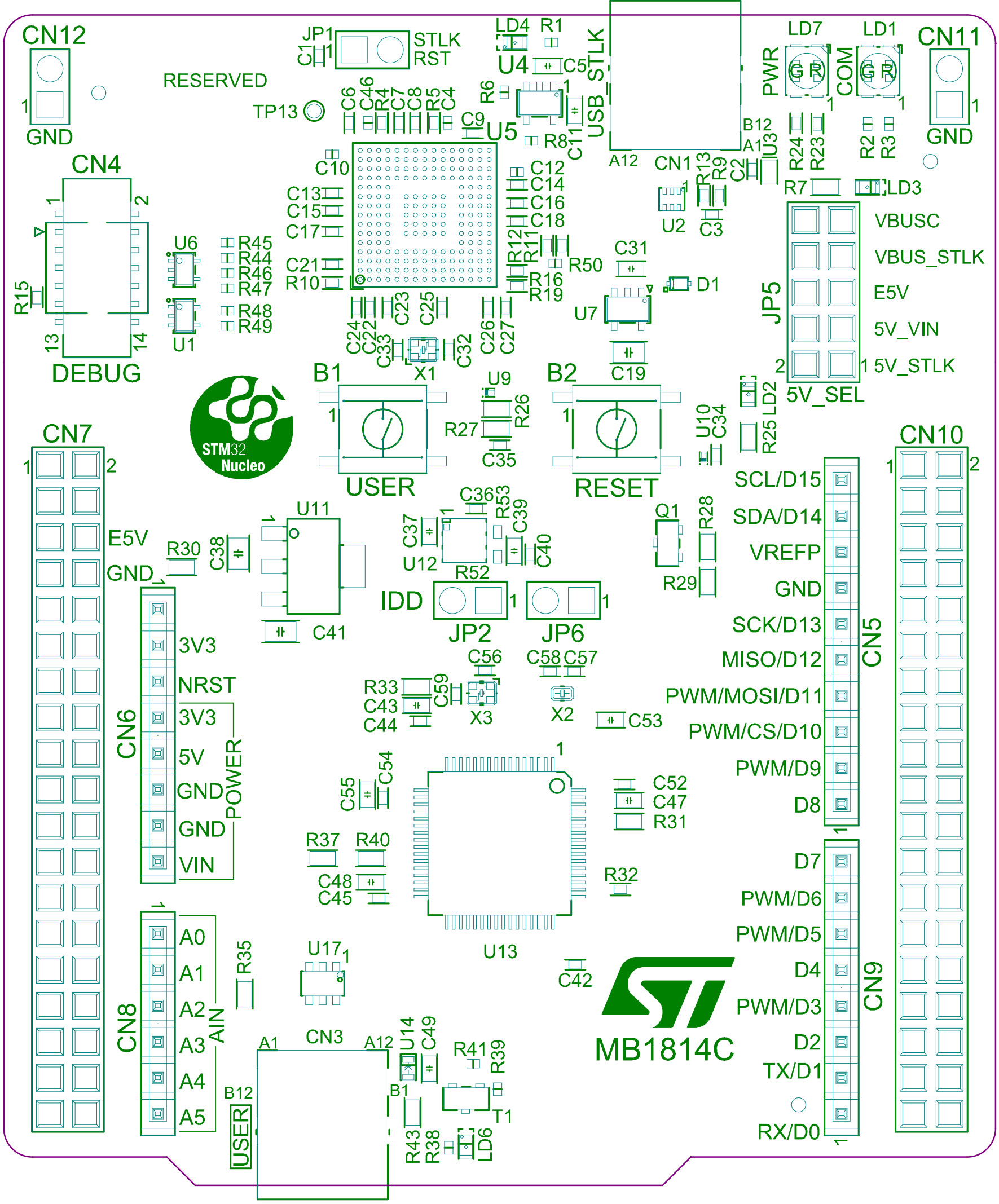

Top-Overlay

Mid-Assembly

.GTO

.GTP

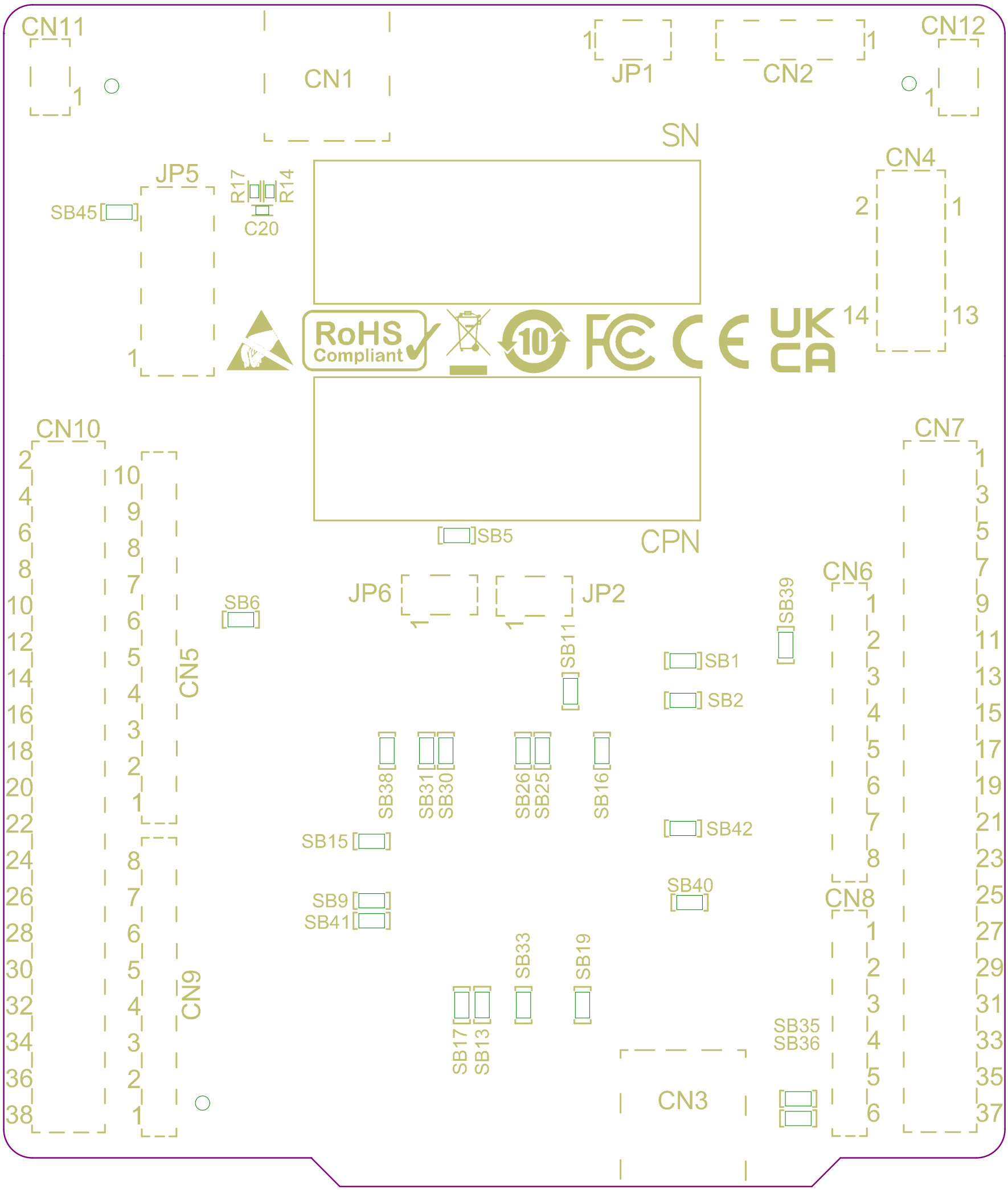

M15-Bottom Assembly .GM15