STM32G0C1E-EV

MB1581

Table of contents

Sheet 1: Project overview (this page)

Sheet 2: MB1581_TOP

Sheet 3: MCU

Sheet 4: Power

Sheet 5: Audio

Sheet 6: LCD_MicroSD

Sheet 7: Motor Control

Sheet 8: Peripherals

Sheet 9: UART_CAN

Sheet 10: Extension connectors

Sheet 11: ST_LINK_V2-1

Sheet 12: SWD

Legend

General comment such as function title, configuration, ...

Text to be added to silkscreen.

Warning text.

Notes to generate the board layout.

Open Platform License Agreement

The Open Platform License Agreement (“Agreement”) is a binding legal contract between you ("You") and STMicroelectronics International N.V. (“ST”), a company incorporated under the laws of the Netherlands acting for the purpose of this Agreement through its Swiss branch 39, Chemin du Champ des Filles, 1228 Plan-les-Ouates, Geneva, Switzerland.

By using the enclosed reference designs, schematics, PC board layouts, and documentation, in hardcopy or CAD tool file format (collectively, the “Reference Material”), You are agreeing to be bound by the terms and conditions of this Agreement. Do not use the Reference Material until You have read and agreed to this Agreement terms and conditions. The use of the Reference Material automatically implies the acceptance of the Agreement terms and conditions.

The complete Open Platform License Agreement can be found on www.st.com/opla.

U_MB1581_TOP
MB1581_TOP.SchDoc

Title: **Project overview**		
Project: **STM32G0C1E-EV**		
Variant: G0C1E		
Revision: B-02		Reference: MB1581
Size: A4	Date: 07-SEPT-2020	Sheet: 1 of 12

life.augmented

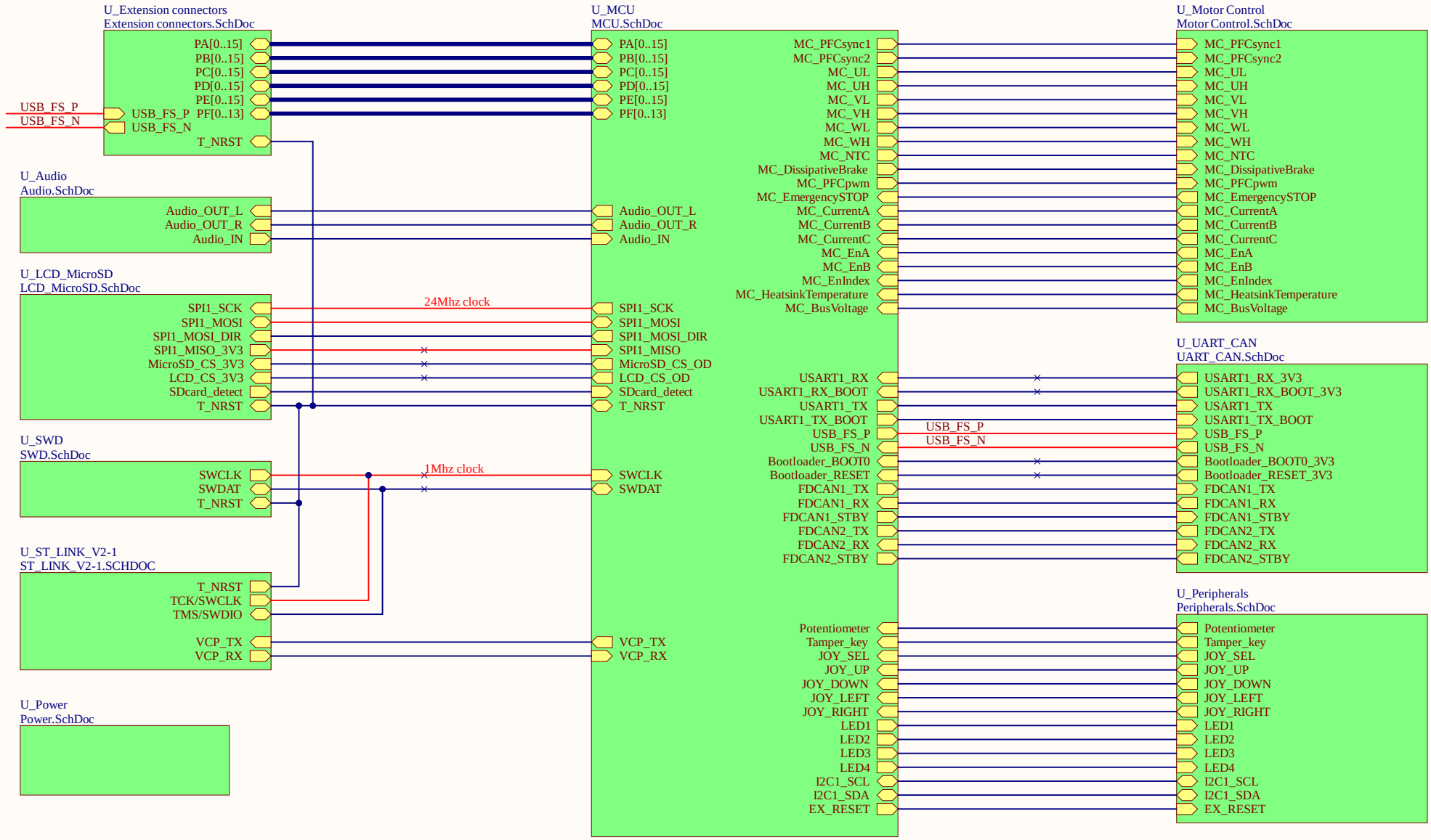

Title: **MB1581_TOP**		
Project: **STM32G0C1E-EV**		
Variant: G0C1E		
Revision: B-02		Reference: MB1581
Size: A4	Date: 07-SEPT-2020	Sheet: 2 of 12

life.augmented

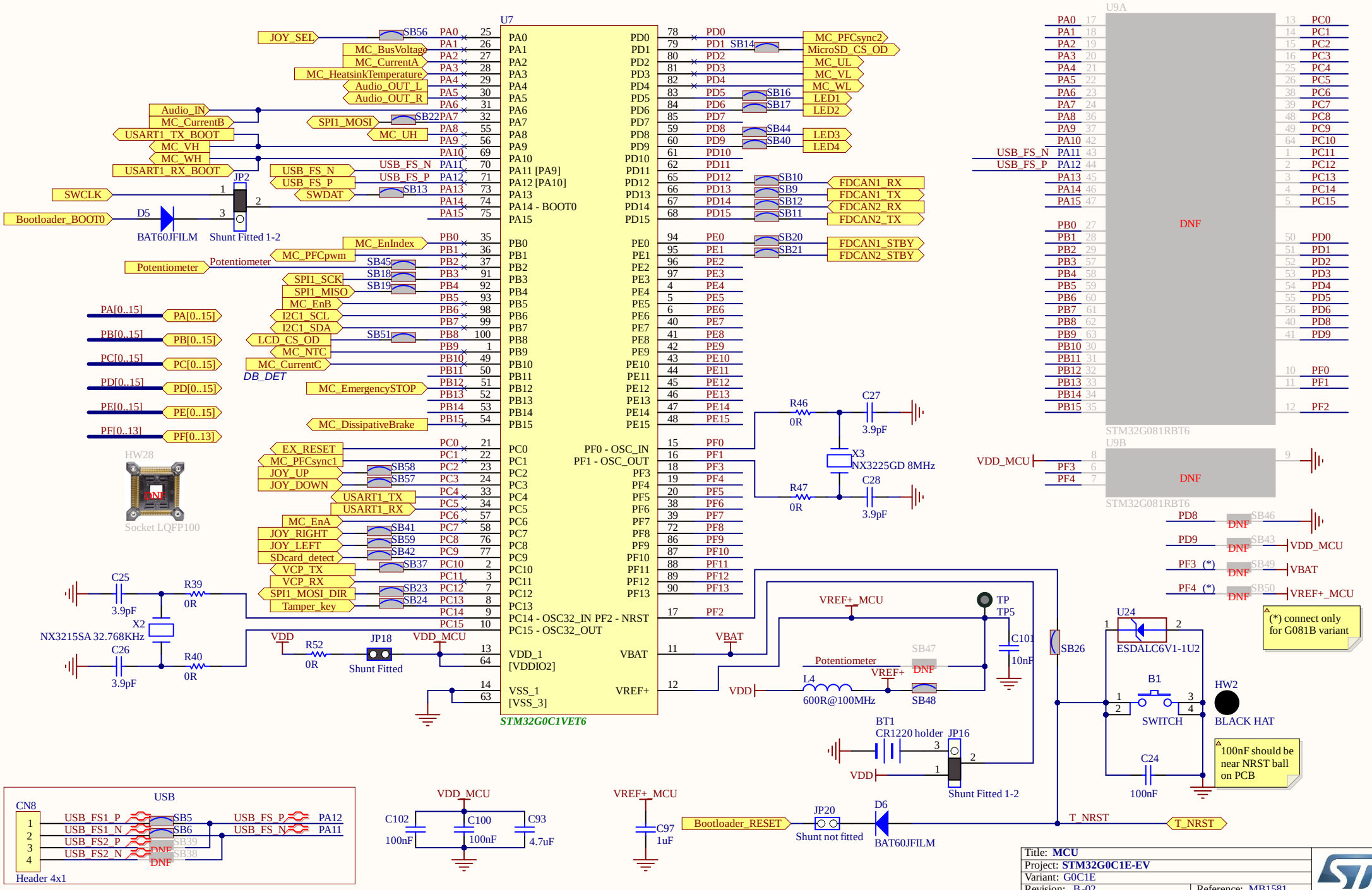
U7
STM32G0C1VET6
U9A
STM32G081RBT6
U9B
STM32G081RBT6
DNF
JOY_SEL
MC_BusVoltage
MC_CurrentA
MC_HeatsinkTemperature
Audio_OUT_L
Audio_OUT_R
Audio_IN
MC_CurrentB
USART1_TX_BOOT
MC_VH
MC_WH
USART1_RX_BOOT
SPI1_MOSI
MC_UH
USB_FS_N
USB_FS_P
SWDAT
SWCLK
Bootloader_BOOT0
D5
BAT60JFILM
JP2
Shunt Fitted 1-2
MC_EnIndex
MC_PFCpwm
Potentiometer
SPI1_SCK
SPI1_MISO
MC_EnB
I2C1_SCL
I2C1_SDA
LCD_CS_OD
MC_NTC
MC_CurrentC
DB_DET
MC_EmergencyStOP
MC_DissipativeBrake
EX_RESET
MC_PFCsync1
JOY_UP
JOY_DOWN
USART1_TX
USART1_RX
MC_EnA
JOY_RIGHT
JOY_LEFT
SDcard_detect
VCP_TX
VCP_RX
SPI1_MOSI_DIR
Tamper_key
MC_PFCsync2
MicroSD_CS_OD
MC_UL
MC_VL
MC_WL
LED1
LED2
LED3
LED4
FDCAN1_RX
FDCAN1_TX
FDCAN2_RX
FDCAN2_TX
FDCAN1_STBY
FDCAN2_STBY
PA[0..15]
PB[0..15]
PC[0..15]
PD[0..15]
PE[0..15]
PF[0..13]
HW28
Socket LQFP100
C25
3.9pF
R39
0R
X2
NX3215SA 32.768KHz
C26
3.9pF
R40
0R
VDD
R52
0R
JP18
Shunt Fitted
VDD_MCU
R46
0R
C27
3.9pF
X3
NX3225GD 8MHz
R47
0R
C28
3.9pF
VREF+_MCU
TP
TP5
C101
10nF
VBAT
Potentiometer
SB47
DNF
VREF+
L4
600R@100MHz
SB48
BT1
CR1220 holder
JP16
Shunt Fitted 1-2
SB26
U24
ESDALC6V1-1U2
B1
SWITCH
HW2
BLACK HAT
C24
100nF
(*) connect only for G081B variant
100nF should be near NRST ball on PCB
PD8
SB46
PD9
SB43
VDD_MCU
PF3 (*)
SB49
VBAT
PF4 (*)
SB50
VREF+_MCU
CN8
Header 4x1
USB
USB_FS1_P
USB_FS1_N
USB_FS2_P
USB_FS2_N
SB5
SB6
SB39
SB38
USB_FS_P
USB_FS_N
PA12
PA11
C102
100nF
C100
100nF
C93
4.7uF
VREF+_MCU
C97
1uF
Bootloader_RESET
JP20
Shunt not fitted
D6
BAT60JFILM
T_NRST
Title: MCU
Project: STM32G0C1E-EV
Variant: G0C1E
Revision: B-02
Reference: MB1581
Size: A4
Date: 07-SEPT-2020
Sheet: 3 of 12
life.augmented

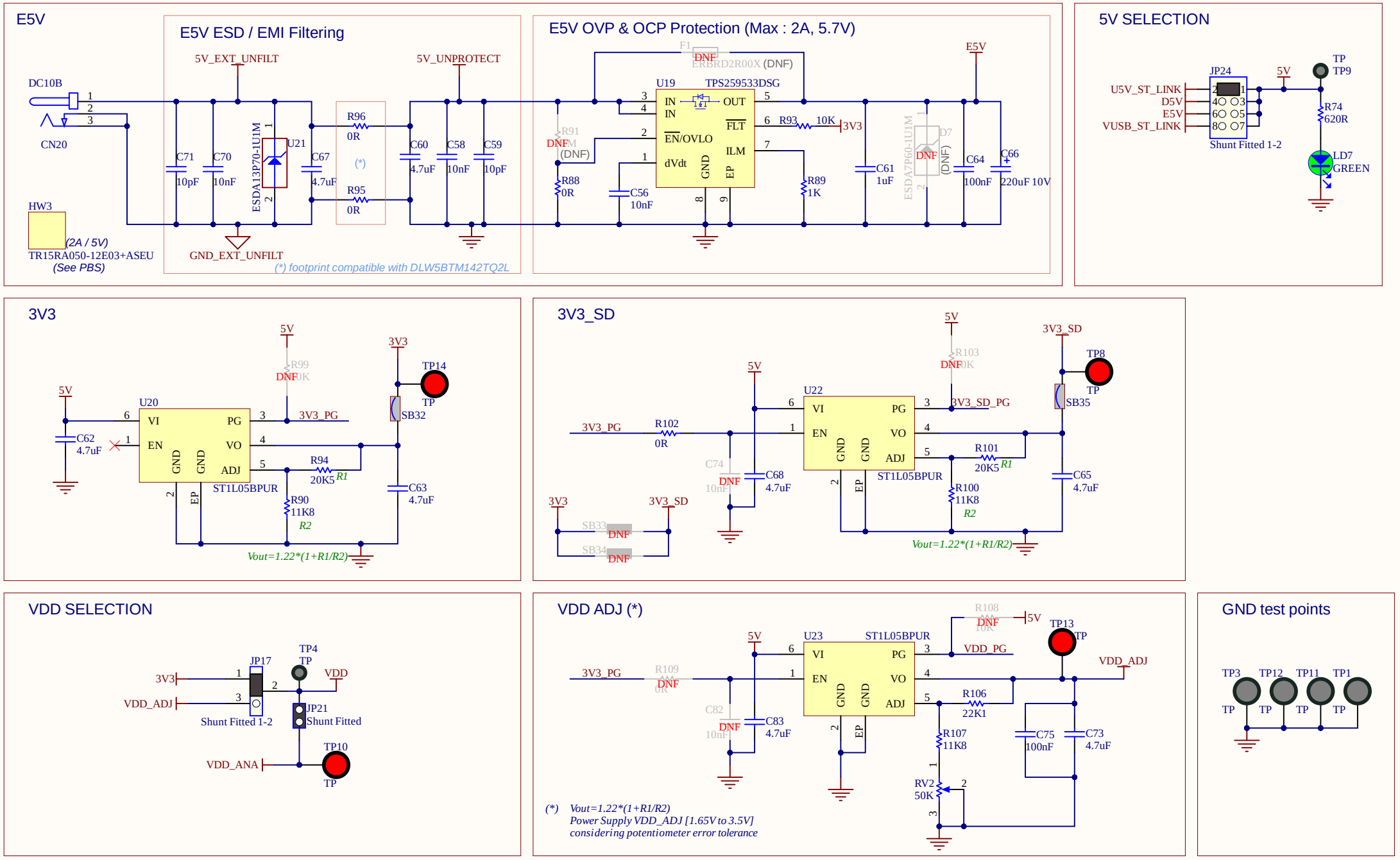

Title: **Power**		
Project: **STM32G0C1E-EV**		
Variant: G0C1E		
Revision: B-02		Reference: MB1581
Size: A4	Date: 07-SEPT-2020	Sheet: 4 of 12

life.augmented

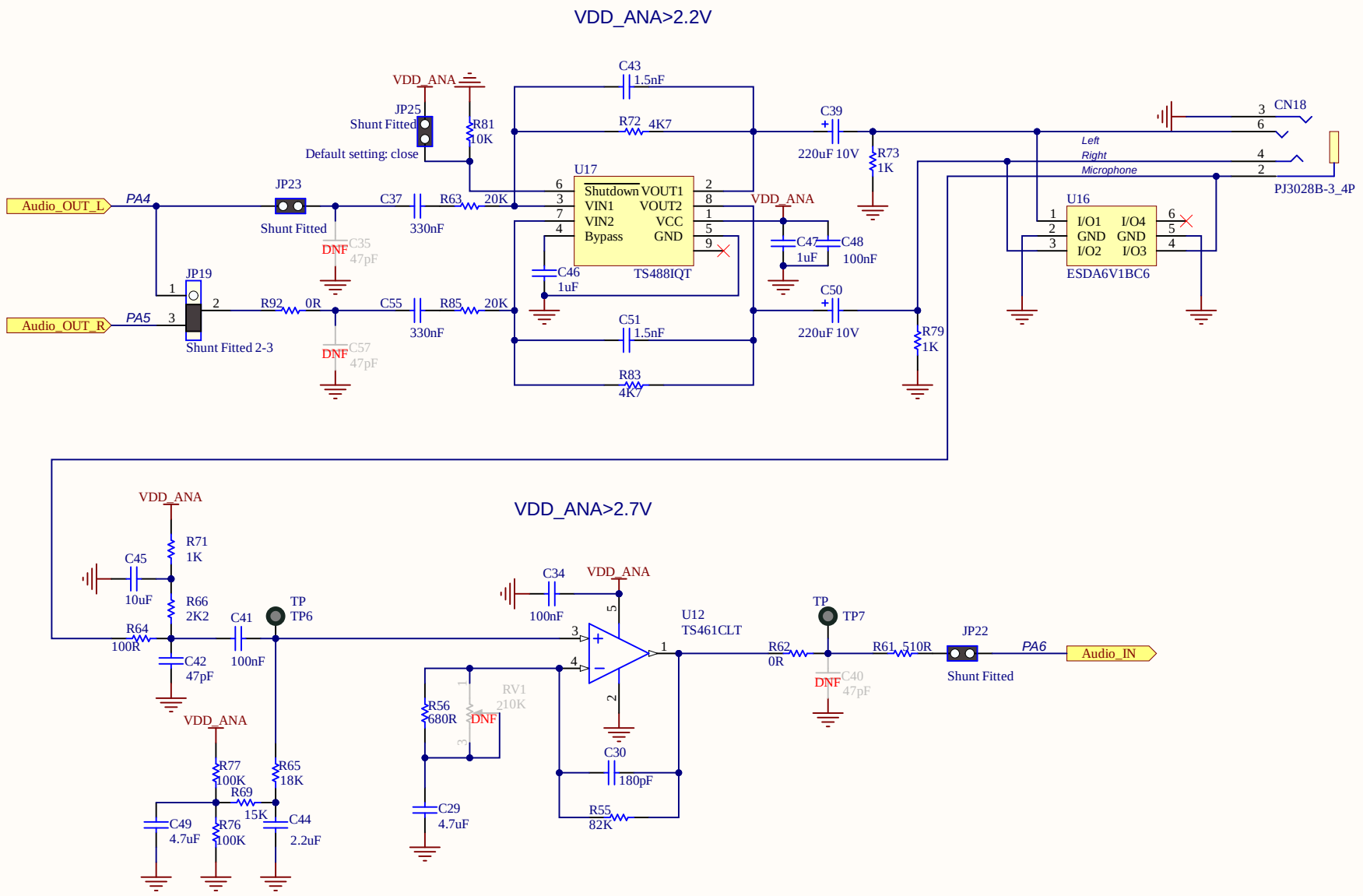

Title: **Audio**		
Project: **STM32G0C1E-EV**		
Variant: G0C1E		
Revision: B-02		Reference: MB1581
Size: A4	Date: 07-SEPT-2020	Sheet: 5 of 12

life.augmented

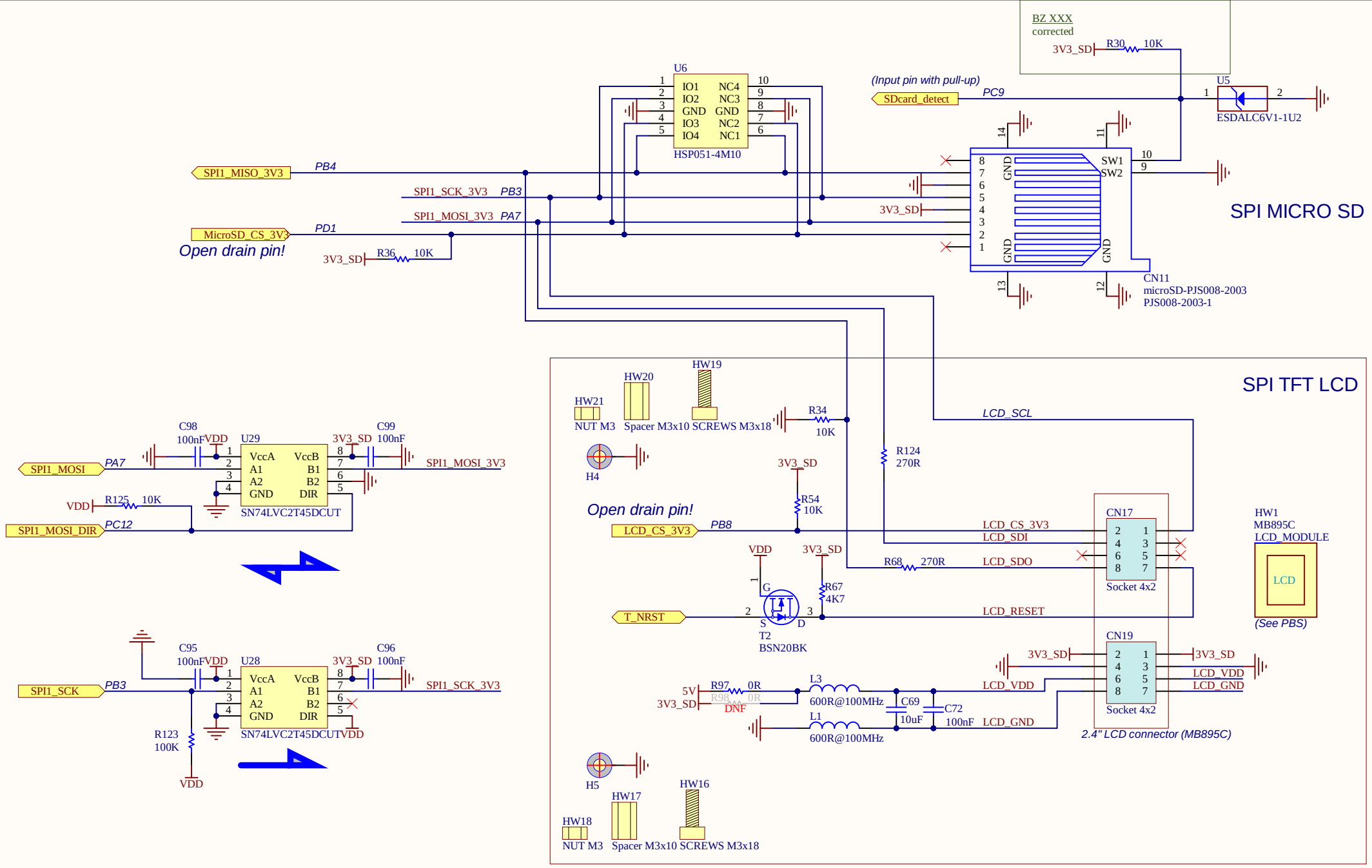

Title: **LCD_MicroSD**		
Project: **STM32G0C1E-EV**		
Variant: G0C1E		
Revision: B-02		Reference: MB1581
Size: A4	Date: 07-SEPT-2020	Sheet: 6 of 12

life.augmented

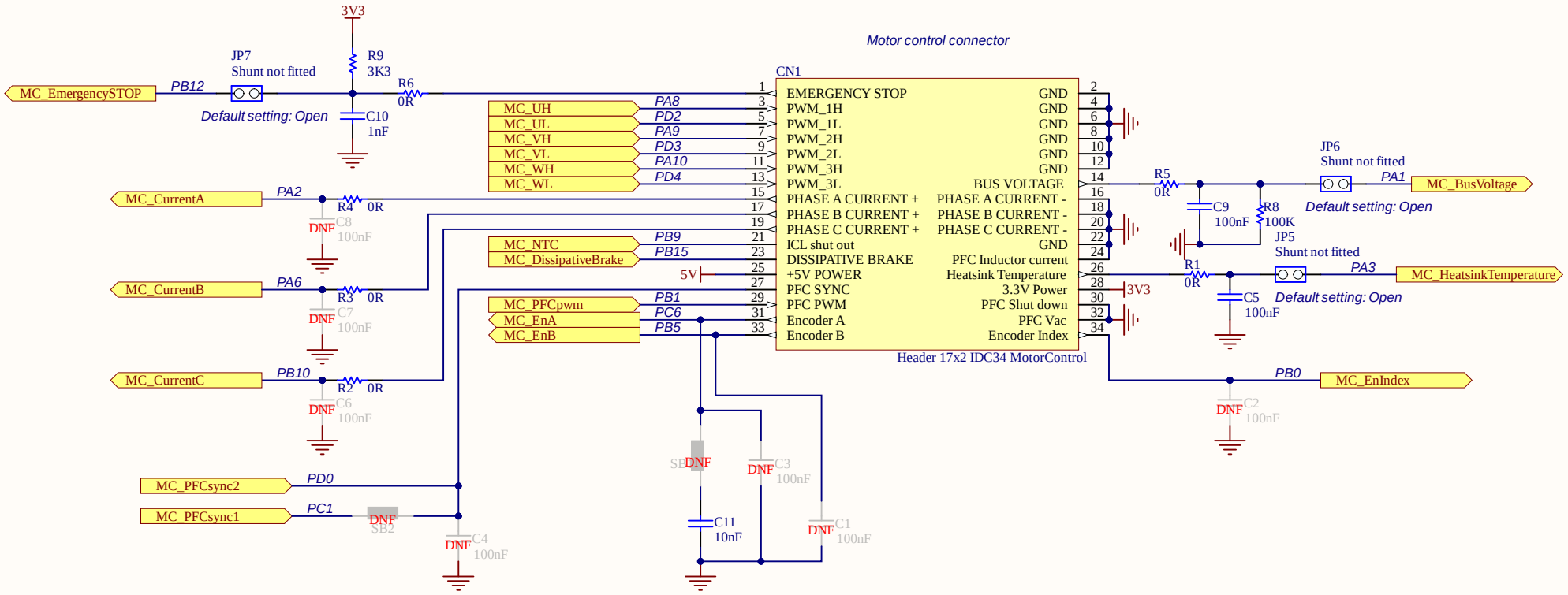

Title: **Motor Control**		
Project: **STM32G0C1E-EV**		
Variant: G0C1E		
Revision: B-02		Reference: MB1581
Size: A4	Date: 07-SEPT-2020	Sheet: 7 of 12

life.augmented

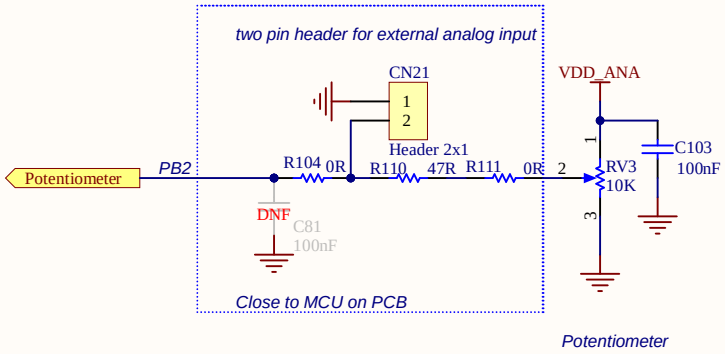

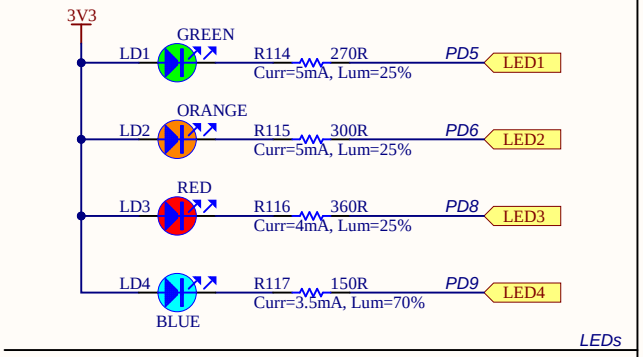

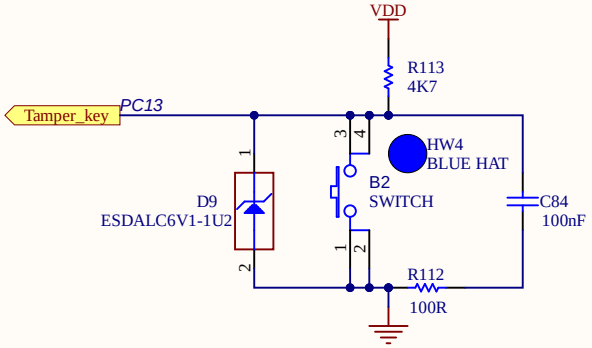

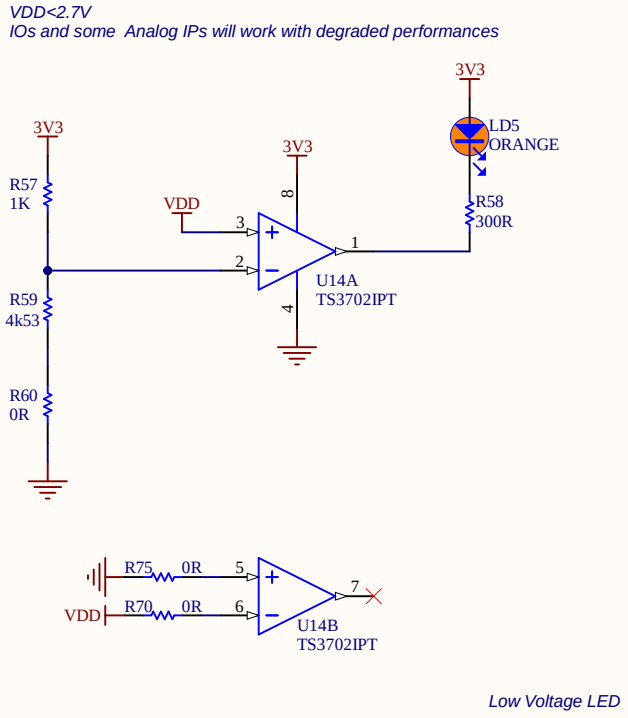

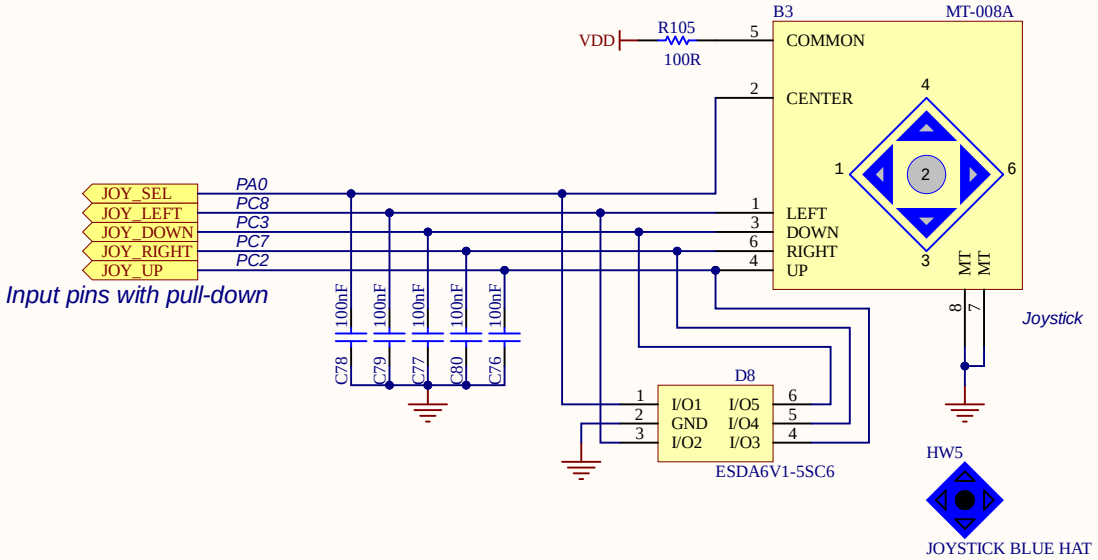

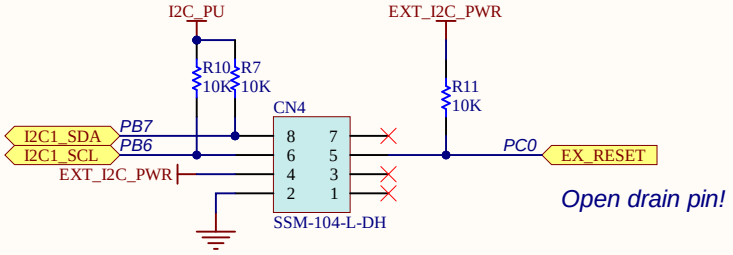

Title: **Peripherals**		
Project: **STM32G0C1E-EV**		
Variant: G0C1E		
Revision: B-02		Reference: MB1581
Size: A4	Date: 07-SEPT-2020	Sheet: 8 of 12

life.augmented

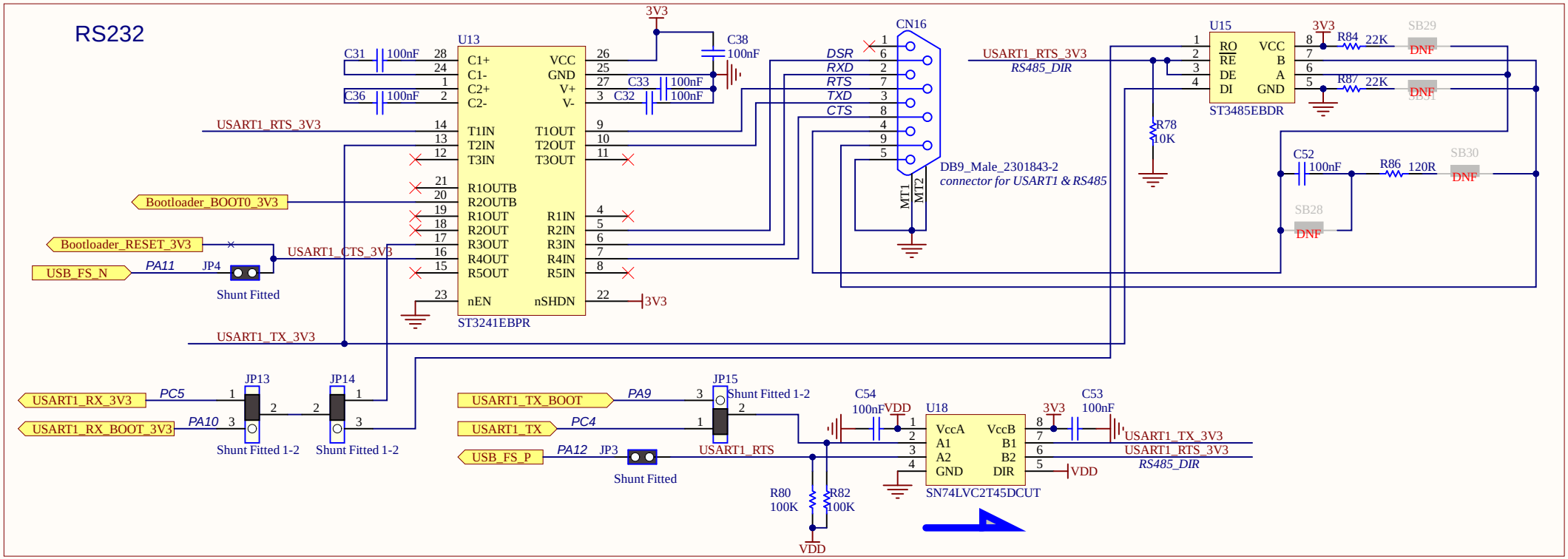

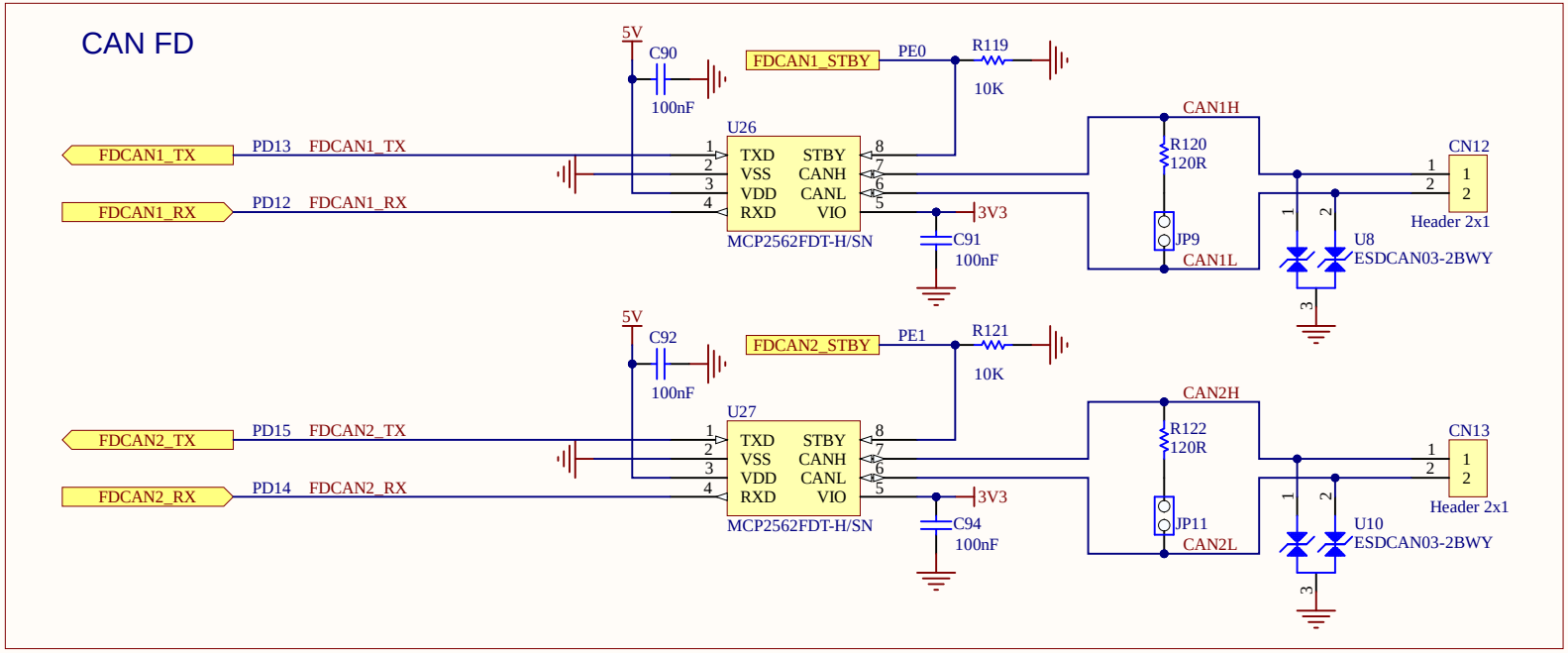

Title: **UART & CAN FD**		
Project: **STM32G0C1E-EV**		
Variant: G0C1E		
Revision: B-02		Reference: MB1581
Size: A4	Date: 07-SEPT-2020	Sheet: 9 of 12

life.augmented

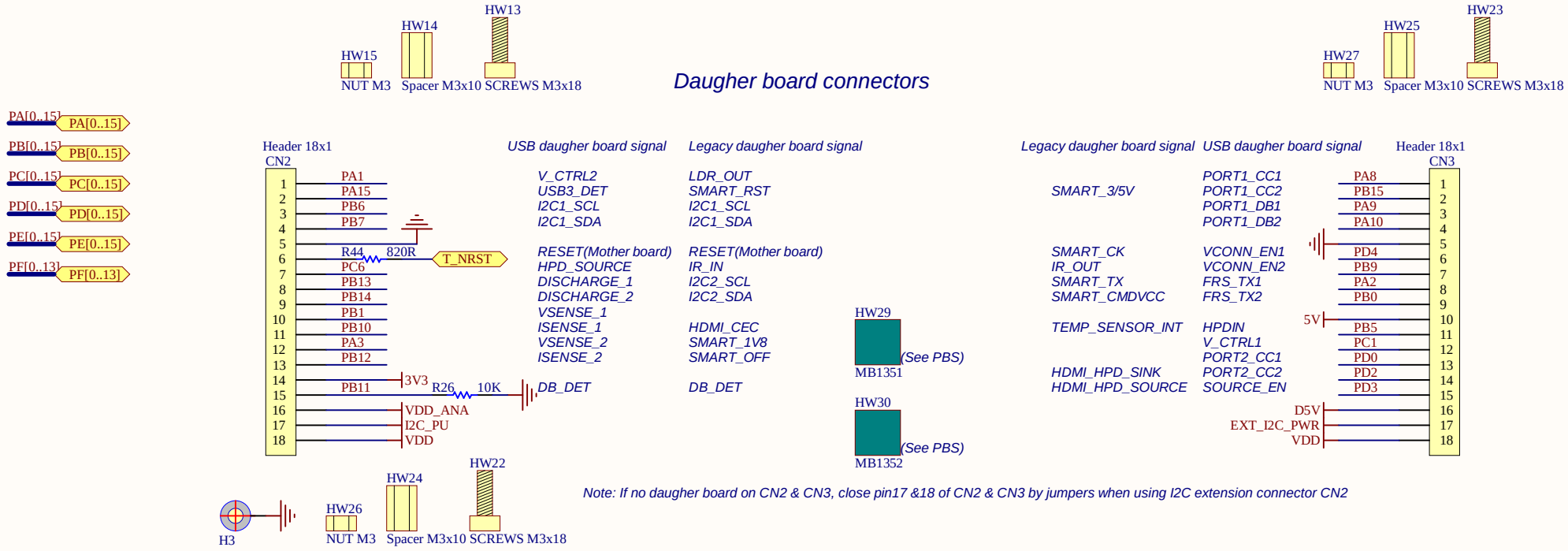

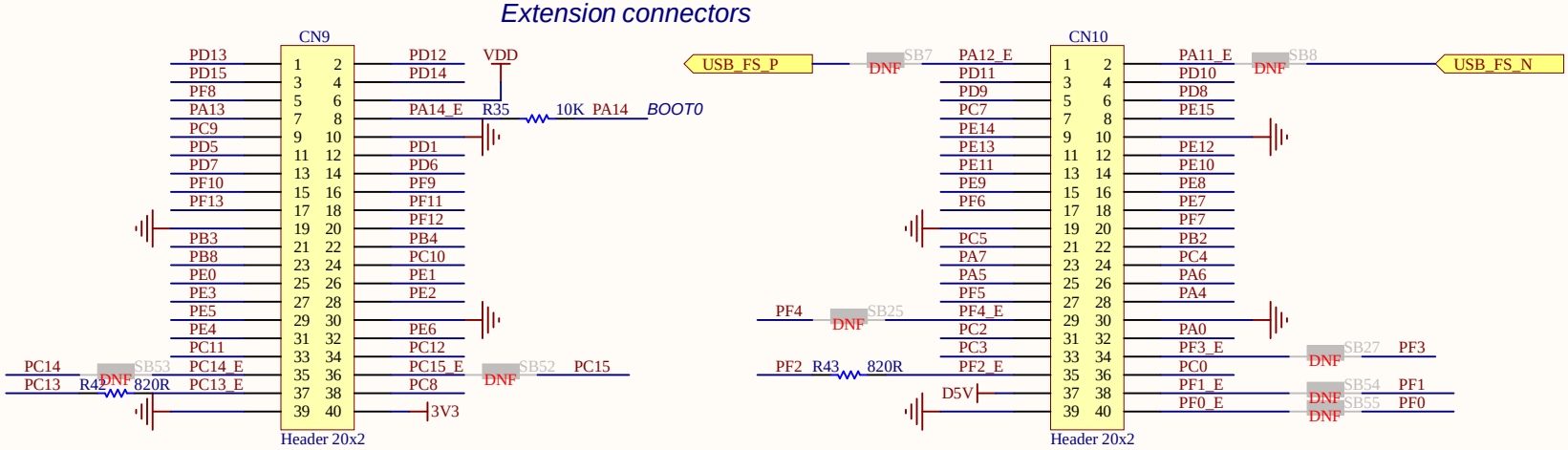

Title: **Extension connectors**		
Project: **STM32G0C1E-EV**		
Variant: G0C1E		
Revision: B-02		Reference: MB1581
Size: A4	Date: 07-SEPT-2020	Sheet: 10 of 12

life.augmented

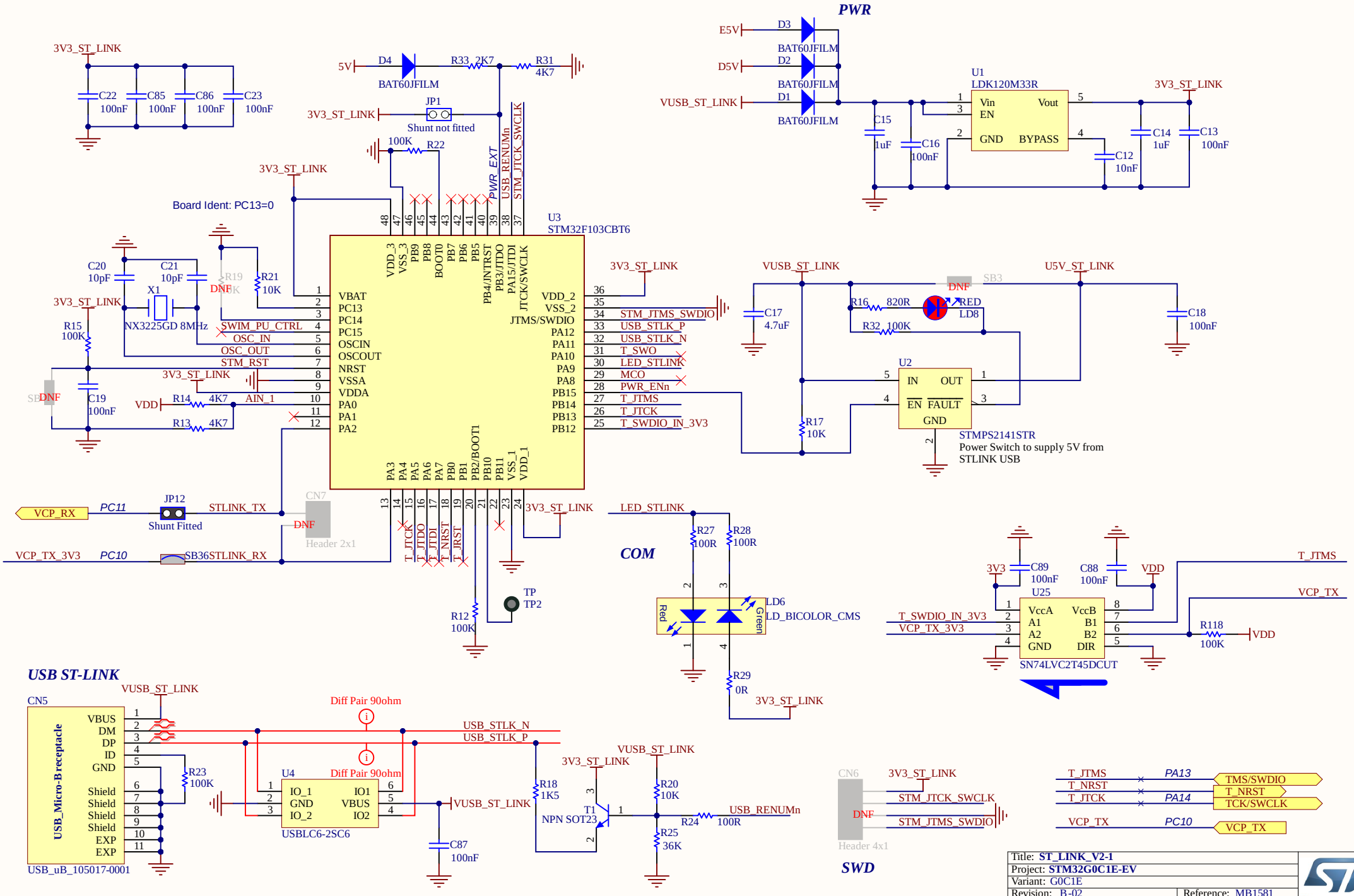

Title: ST_LINK_V2-1		
Project: STM32G0C1E-EV		
Variant: G0C1E		
Revision: B-02		Reference: MB1581
Size: A4	Date: 07-SEPT-2020	Sheet: 11 of 12

life.augmented

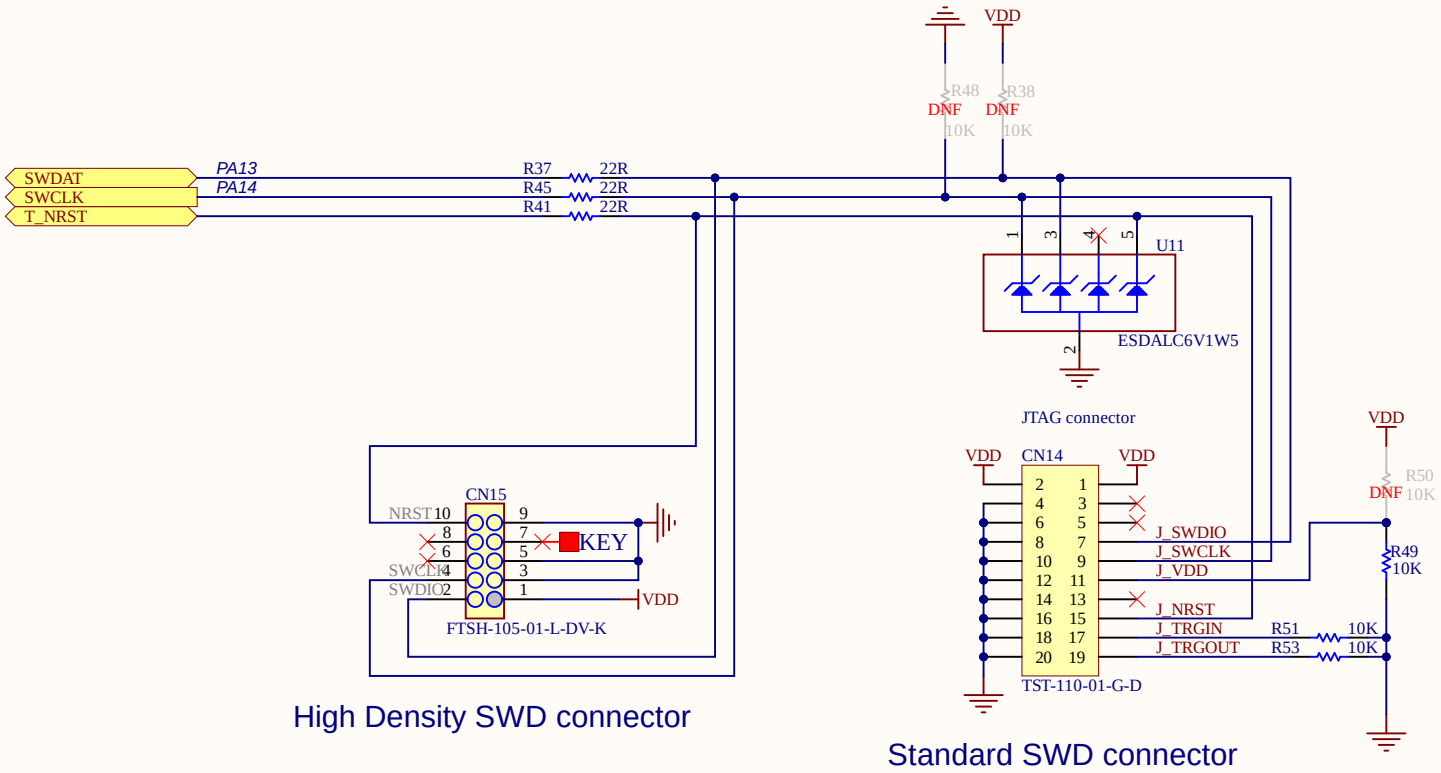

High Density SWD connector

Standard SWD connector

Title: **SWD**		
Project: **STM32G0C1E-EV**		
Variant: G0C1E		
Revision: B-02		Reference: MB1581
Size: A4	Date: 07-SEPT-2020	Sheet: 12 of 12

life.augmented

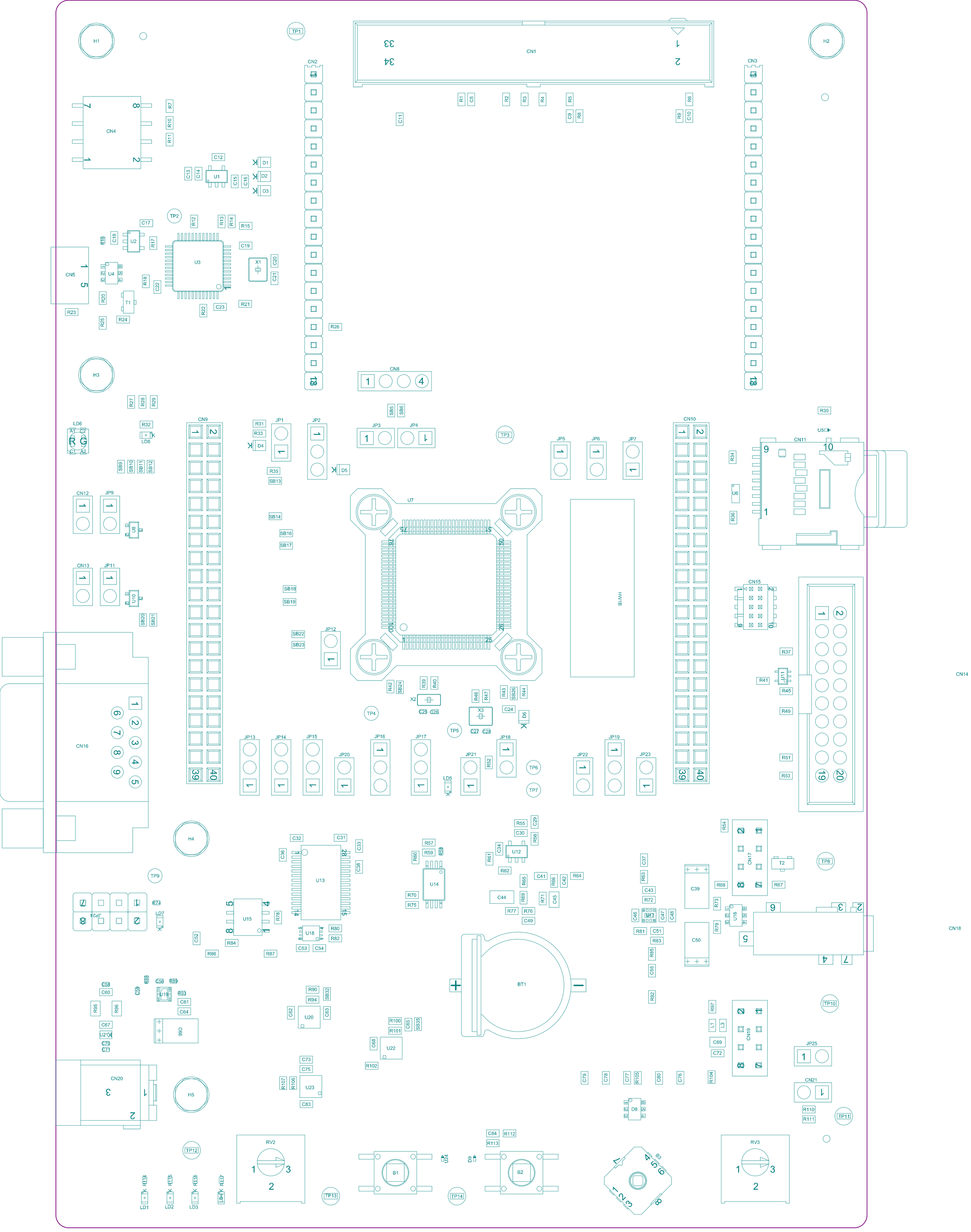

Project: STM32G0C1E-EV	
Layer: M14-Top Assembly	Gerber: .GM14
Variant: G0C1E	Ref: MB1581
Date: 07-SEPT-2020	Rev: B

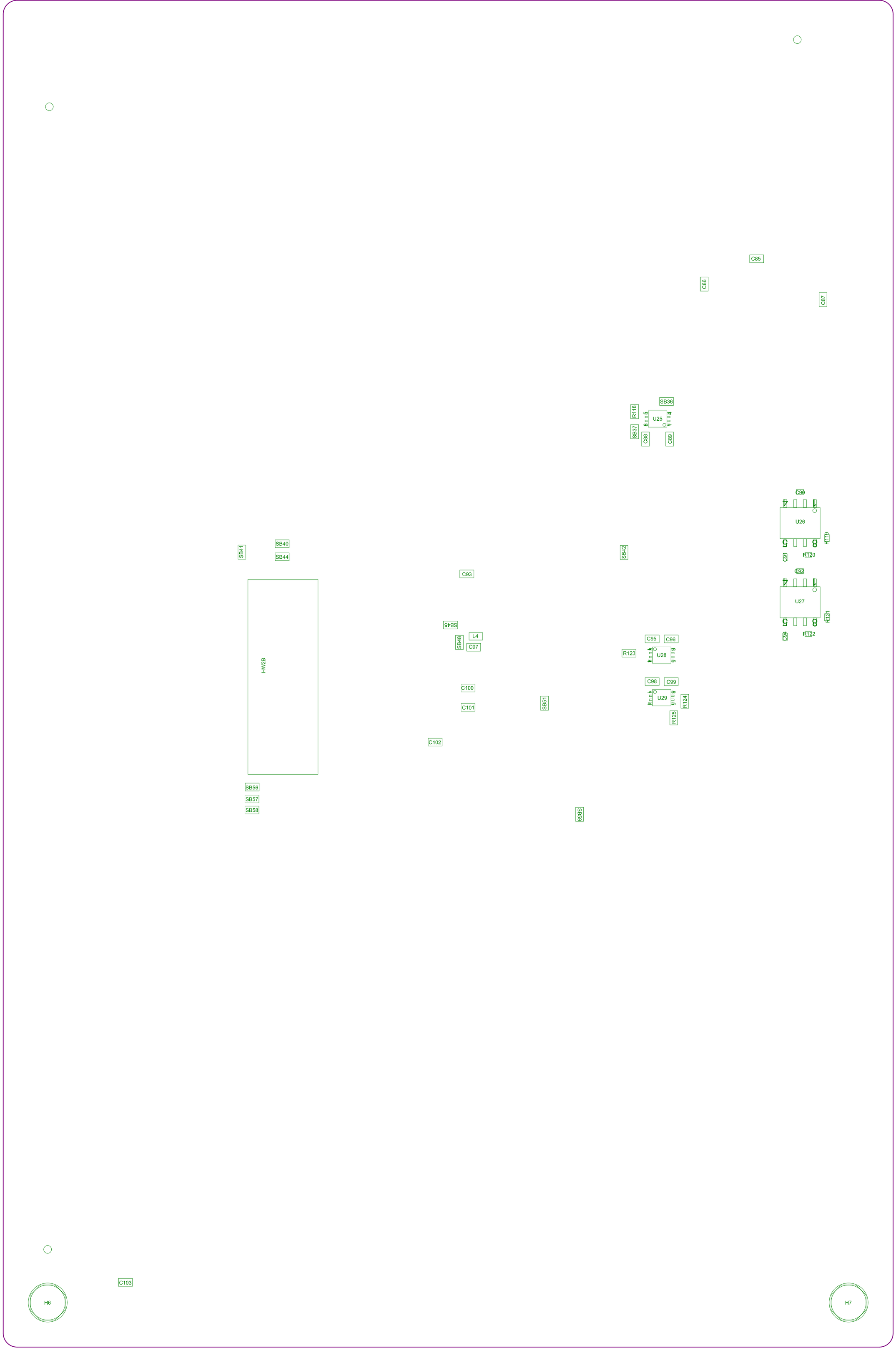

Project: STM32G0C1E-EV	
Layer: M15-Bottom Assembly	Gerber:.GM15
Variant: G0C1E	Ref: MB1581
Date: 07-SEPT-2020	Rev: B