Nucleo-144_Q (int-SMPS)

MB1549

Table of contents

Sheet 1: Project_overview (this page)

Sheet 2: MB1549 Top

Sheet 3: STM32 microcontroller IOs

Sheet 4: STM32 microcontroller power

Sheet 5: ARDUINO extension connectors

Sheet 6: POWER BOARD

Sheet 7: USB Type-C

Sheet 8: ST-LINK/V3E

U_MB1549_Top
MB1549_Top.SchDoc

Legend

General comment such as function title, configuration, ...

Text to be added to silkscreen.

Warning text.

Notes to generate the board layout.

OPEN PLATFORM LICENSE AGREEMENT

The Open Platform License Agreement (“Agreement”) is a binding legal contract between you ("You") and STMicroelectronics International N.V. (“ST”), a company incorporated under the laws of the Netherlands acting for the purpose of this Agreement through its Swiss branch 39, Chemin du Champ des Filles, 1228 Plan-les-Ouates, Geneva, Switzerland.

By using the enclosed reference designs, schematics, PC board layouts, and documentation, in hardcopy or CAD tool file format (collectively, the “Reference Material”), You are agreeing to be bound by the terms and conditions of this Agreement. Do not use the Reference Material until You have read and agreed to this Agreement terms and conditions. The use of the Reference Material automatically implies the acceptance of the Agreement terms and conditions.

The complete Open Platform License Agreement can be found on www.st.com/opla.

Title: **Project overview**		
Project: **Nucleo-144_Q (int-SMPS)**		
Variant: U5A5ZJQ		
Revision: C-04		Reference: MB1549
Size: A4	Date: 27-Sept-22	Sheet: 1 of 8

life.augmented

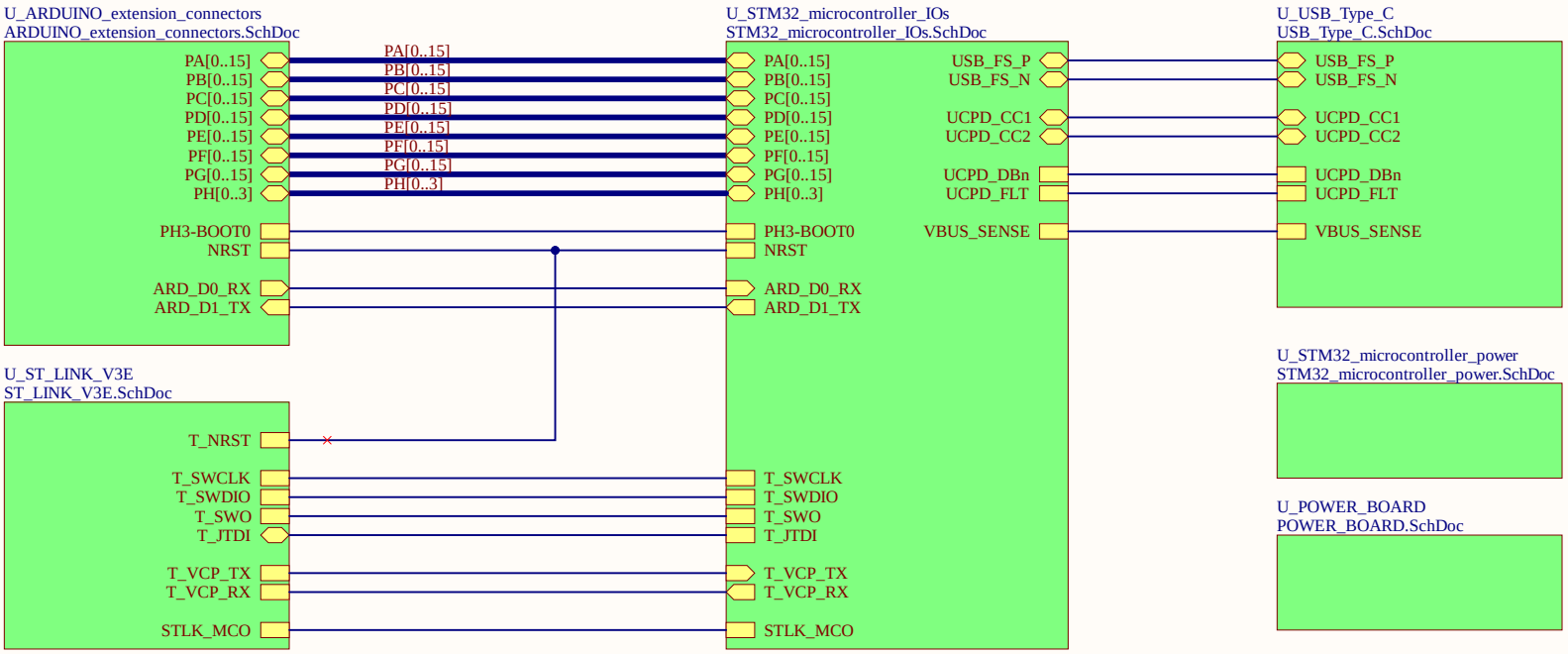

MECHANICAL PARTS

HW101

BOARD REF

MBxxxxy-zz syywwxxxxx

HW102

BOARD CPN

Board CPN

Title: **Top: hierarchical view**		
Project: **Nucleo-144_Q (int-SMPS)**		
Variant: U5A5ZJQ		
Revision: C-04		Reference: MB1549
Size: A4	Date: 27-Sept-22	Sheet: 2 of 8

life.augmented

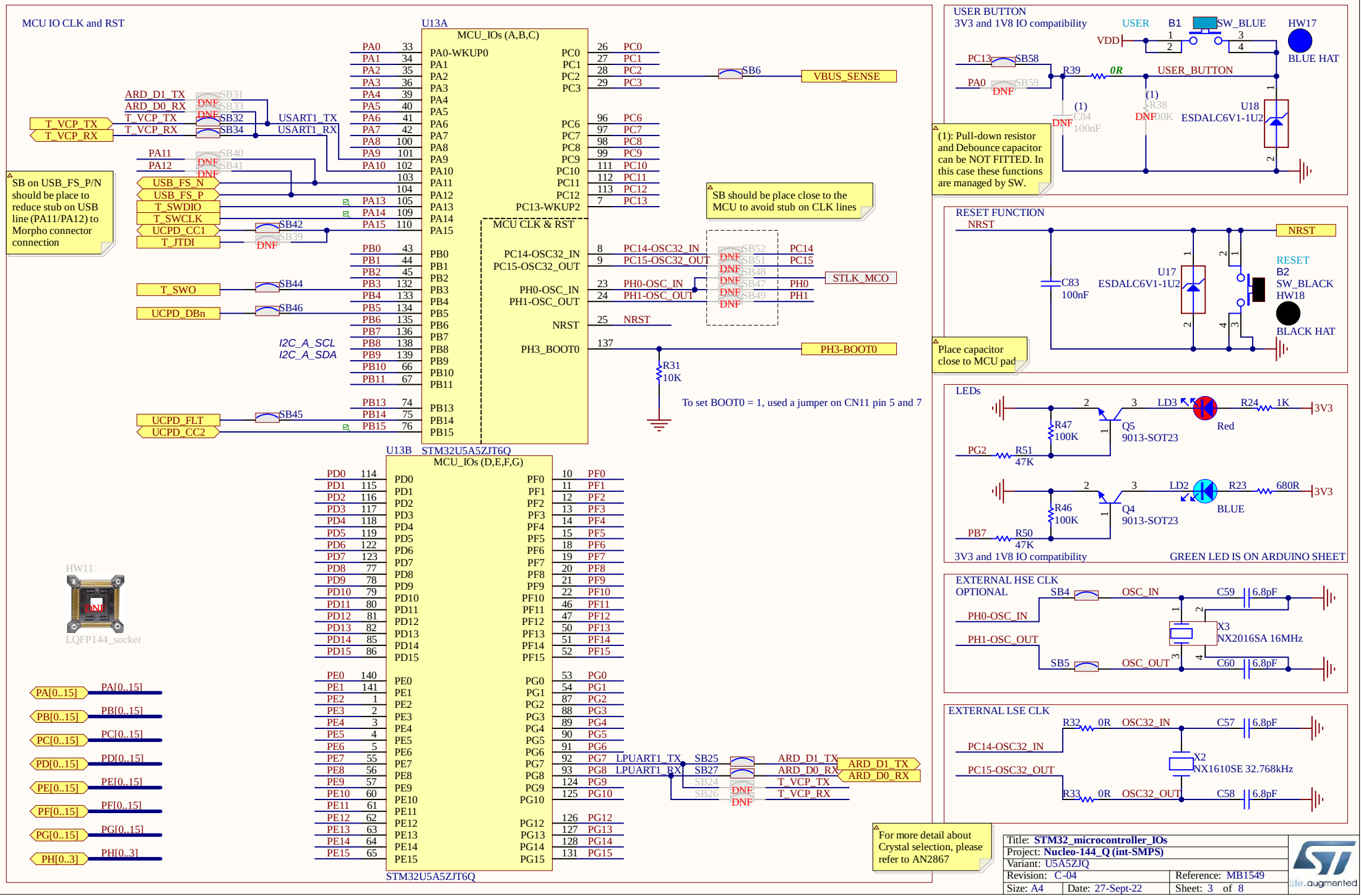
MCU IO CLK and RST
U13A
MCU_IOs (A,B,C)
MCU CLK & RST
U13B STM32U5A5ZJT6Q
MCU_IOs (D,E,F,G)
STM32U5A5ZJT6Q
VBUS_SENSE
STLK_MCO
PH3-BOOT0
R31 10K
To set BOOT0 = 1, used a jumper on CN11 pin 5 and 7
SB on USB_FS_P/N should be place to reduce stub on USB line (PA11/PA12) to Morpho connector connection
SB should be place close to the MCU to avoid stub on CLK lines
USART1_TX
USART1_RX
I2C_A_SCL
I2C_A_SDA
LPUART1_TX
LPUART1_RX
ARD_D1_TX
ARD_D0_RX
T_VCP_TX
T_VCP_RX
USB_FS_N
USB_FS_P
T_SWDIO
T_SWCLK
UCPD_CC1
T_JTDI
T_SWO
UCPD_DBn
UCPD_FLT
UCPD_CC2
HW11
LQFP144_socket
USER BUTTON
3V3 and 1V8 IO compatibility
USER
B1
SW_BLUE
HW17
BLUE HAT
USER_BUTTON
U18
ESDALC6V1-1U2
(1): Pull-down resistor and Debounce capacitor can be NOT FITTED. In this case these functions are managed by SW.
RESET FUNCTION
NRST
U17
ESDALC6V1-1U2
C83 100nF
RESET
B2
SW_BLACK
HW18
BLACK HAT
Place capacitor close to MCU pad
LEDs
LD3
Red
R24 1K
3V3
Q5 9013-SOT23
R47 100K
R51 47K
PG2
LD2
BLUE
R23 680R
Q4 9013-SOT23
R46 100K
R50 47K
PB7
3V3 and 1V8 IO compatibility
GREEN LED IS ON ARDUINO SHEET
EXTERNAL HSE CLK
OPTIONAL
SB4
SB5
OSC_IN
OSC_OUT
PH0-OSC_IN
PH1-OSC_OUT
C59 6.8pF
C60 6.8pF
X3
NX2016SA 16MHz
EXTERNAL LSE CLK
R32 0R
R33 0R
OSC32_IN
OSC32_OUT
PC14-OSC32_IN
PC15-OSC32_OUT
C57 6.8pF
C58 6.8pF
X2
NX1610SE 32.768kHz
For more detail about Crystal selection, please refer to AN2867
Title: STM32_microcontroller_IOs
Project: Nucleo-144_Q (int-SMPS)
Variant: U5A5ZJQ
Revision: C-04
Reference: MB1549
Size: A4
Date: 27-Sept-22
Sheet: 3 of 8
life.augmented

MCU PWR SUPPLIES

Operating range: 1V71<VDD<3V6
Operating range: 1V08<VDDIO<3V6 (only for IO PG[2:15])
Operating range: 1V65<VBAT<3V6
Operating range: 1V62<VDDA<3V6
Operating range: 1V62<VREF<3V6 (depend of VDDA)
Operating range: 1V71<VDDSMPS<3V6

Operating range: 3V0<VDDUSB<3V6

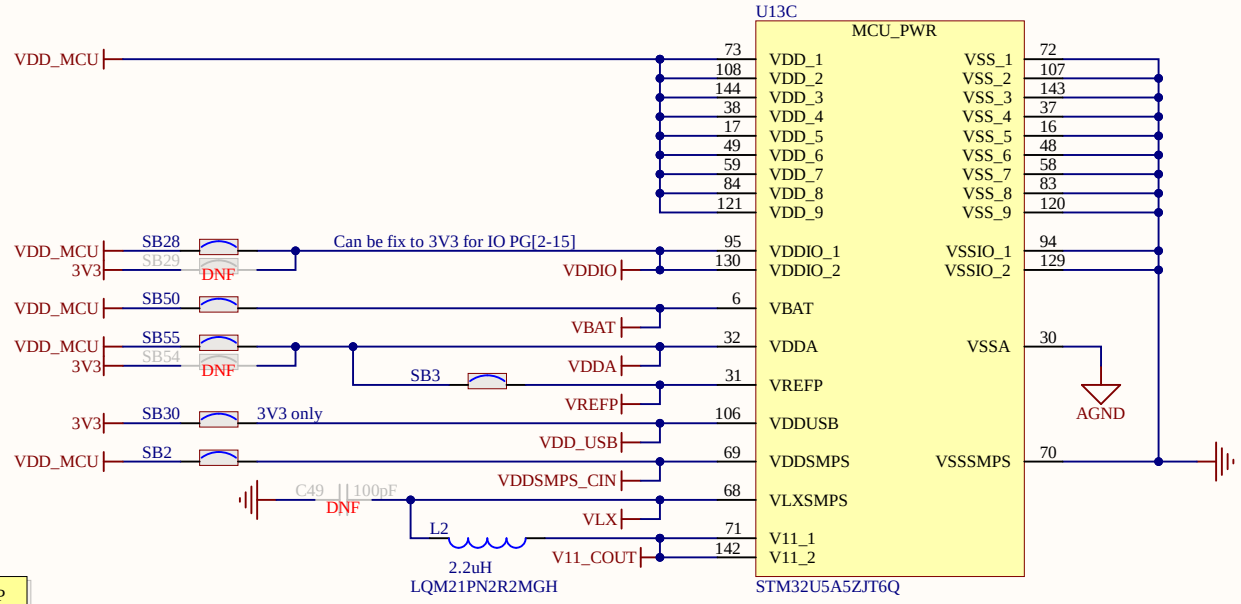

"CIN" and "COUT" should be as closed as possible to the LQFP associated pad. COUT 10µF should be place near L4. Or 1 couple of capacitors per pad (4.7µF / 100nF)

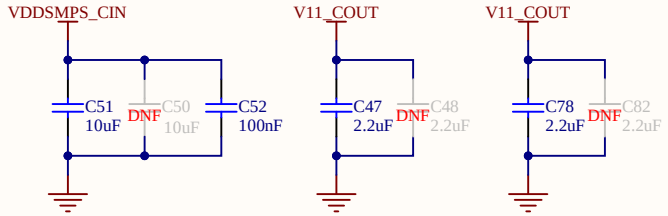

IDD Measurement

Used to give access to VDD MCU consumption only

MCU DECAPS

Ceramic capacitor (Low ESR, ESR<1ohm)

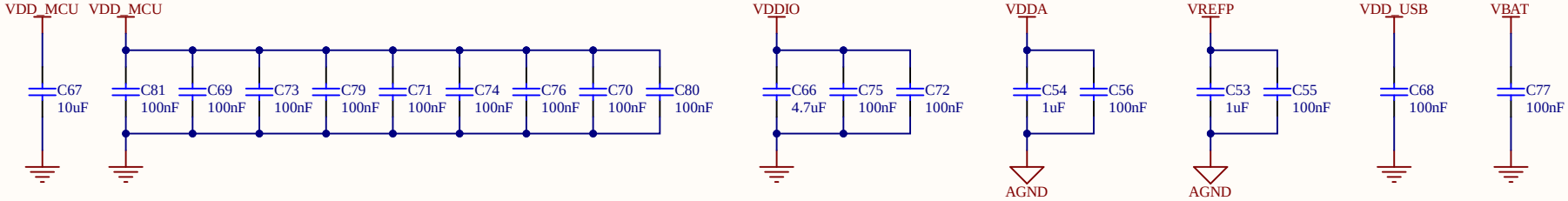

For more detail about decap, please refer to AN5373

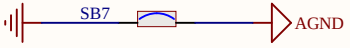

Title: **STM32_microcontroller_power**		
Project: **Nucleo-144_Q (int-SMPS)**		
Variant: U5A5ZJQ		
Revision: C-04		Reference: MB1549
Size: A4	Date: 27-Sept-22	Sheet: 4 of 8

life.augmented

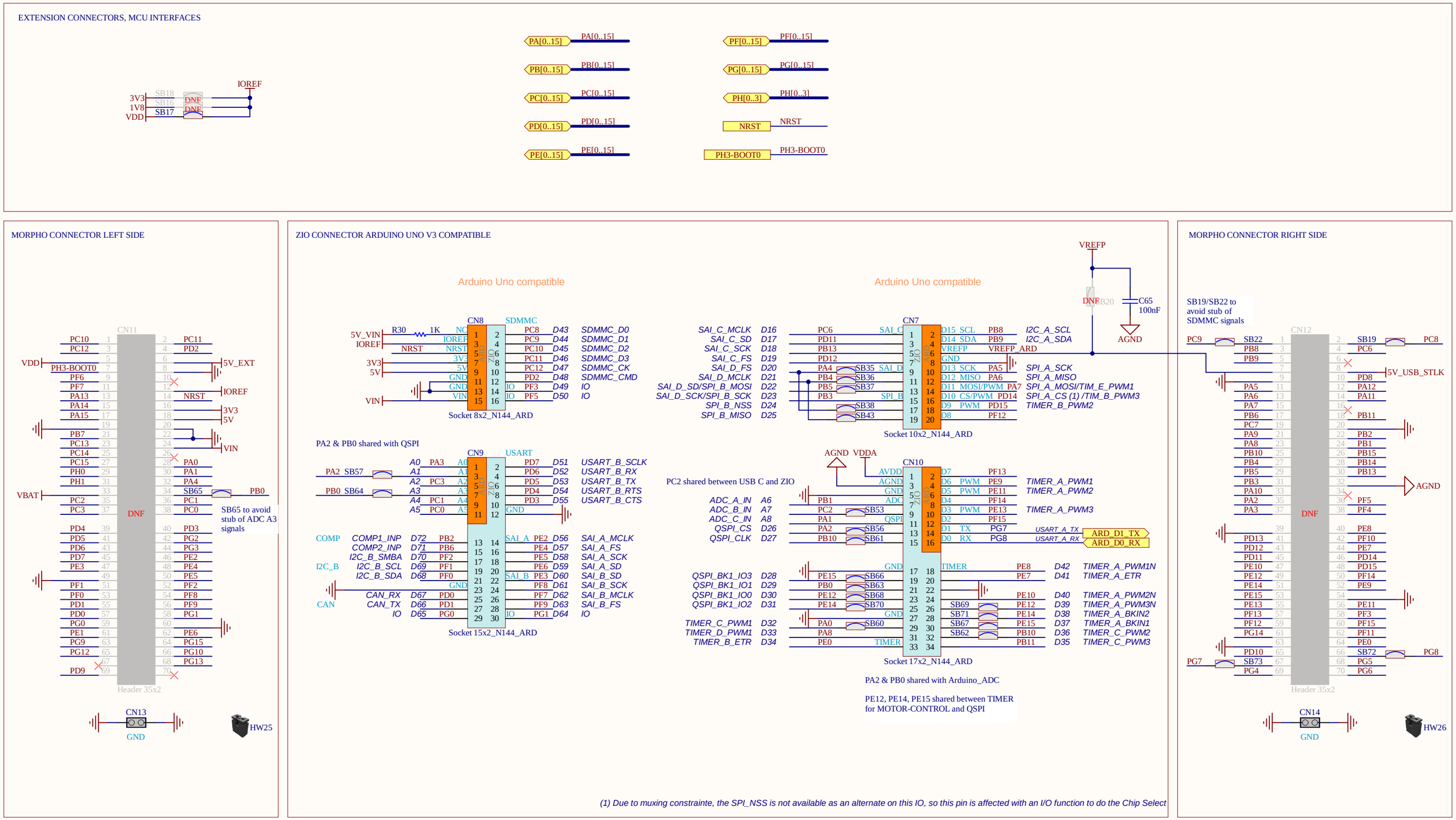

Title: **ARDUINO_extension_connectors**	
Project: **Nucleo-144_Q (int-SMPS)**	
Variant: U5A5ZJQ	
Revision: C-04	Reference: MB1549
Size: A3 Date: 27-Sept-22	Sheet: 5 of 8

life.augmented

USB_TYPE_C CONNECTOR

USB_TYPE_C SINK ONLY
DEAD BATTERY MANAGEMNT DONE BY TCPP01

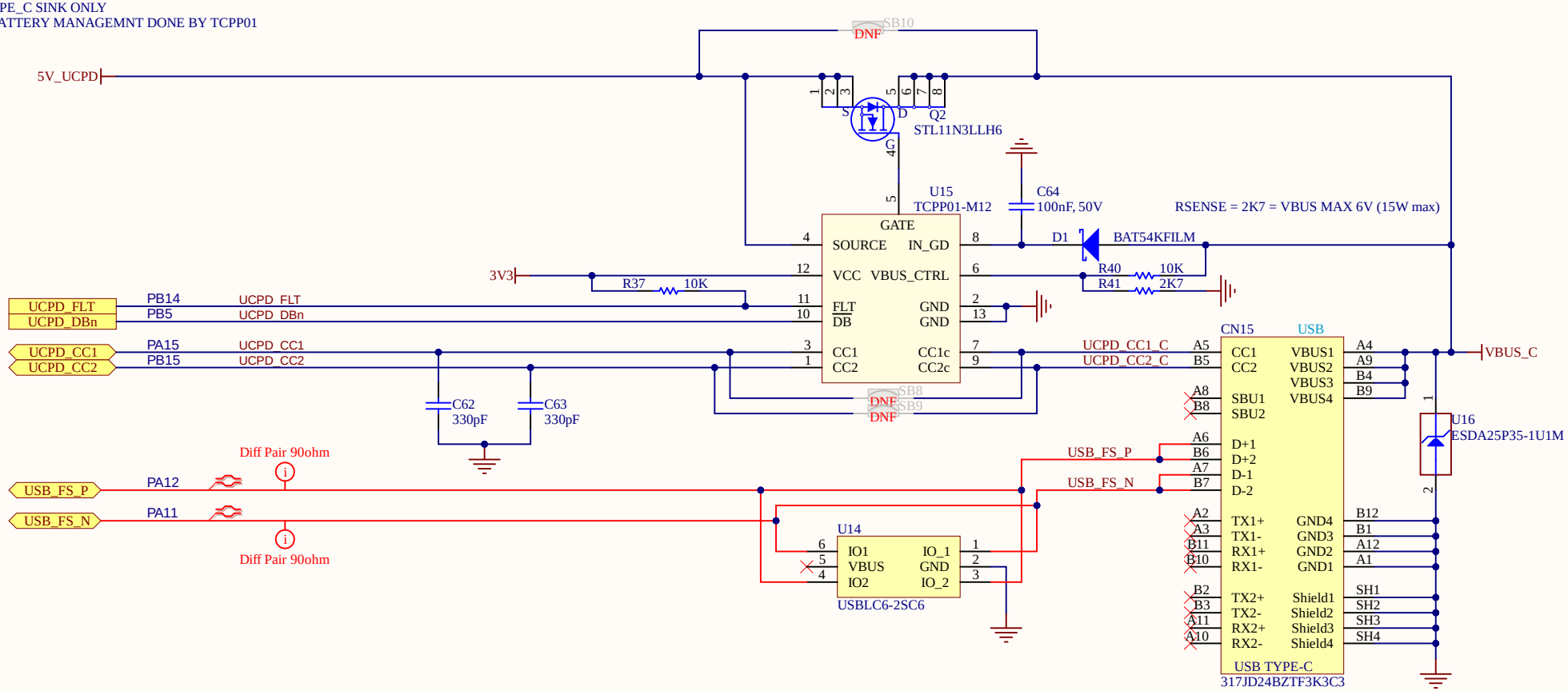

5V_USB_LED

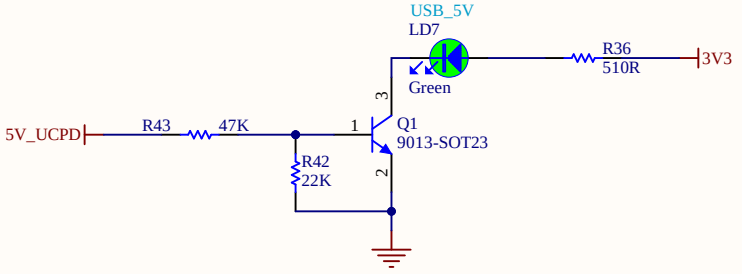

VBUS SENSE

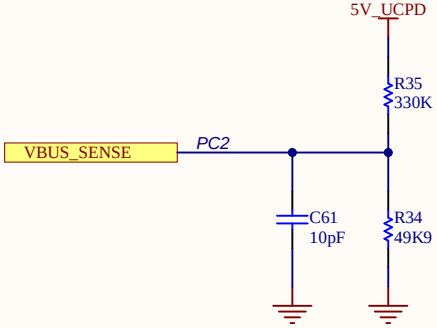

RESERVED FOR DEBUG
DEAD BATTERY MANAGEMENT BY MCU

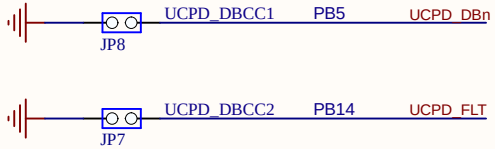

Title: **USB_Type_C**		
Project: **Nucleo-144_Q (int-SMPS)**		
Variant: U5A5ZJQ		
Revision: C-04		Reference: MB1549
Size: A4	Date: 27-Sept-22	Sheet: 6 of 8

life.augmented

BOARD PWR: VIN / 5V (output current depend of VIN range)

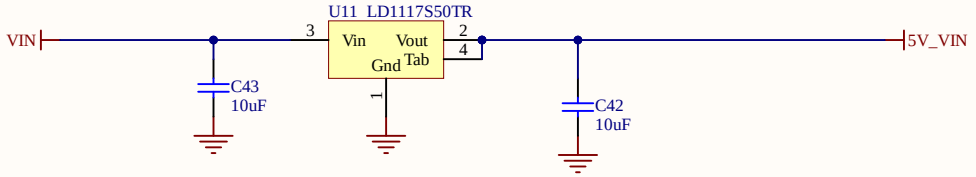

3V3 POWER SOURCE / 500mA

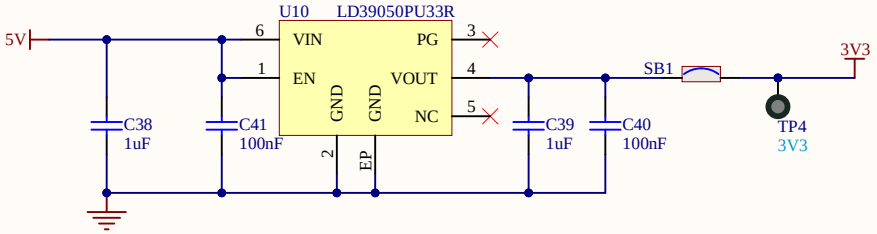

5V PWR SELECTION
MAX CURRENT 500mA WHEN USING POWER INPUT 5V_USB_STLK

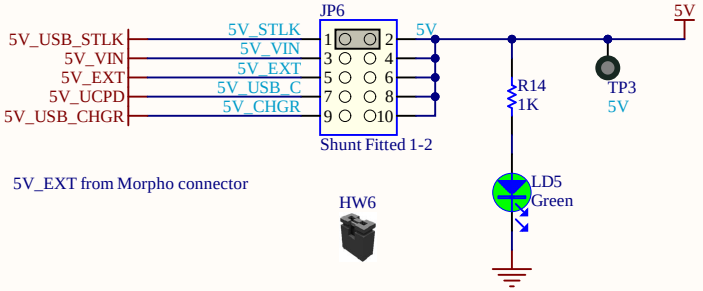

1V8 POWER SOURCE / 400mA

ONLY ONE DEVICE TO BE USED U12 or U19

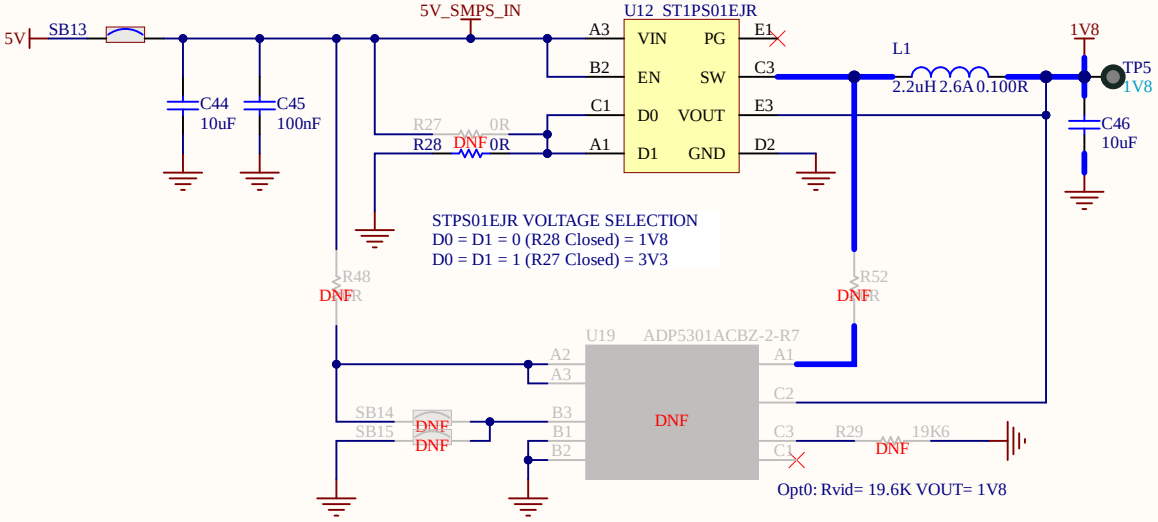

ADP5301 MODE SELECTION
SYNC/MODE = 1 (SB14 Closed) = HYSTERESIS MODE 50mA
SYNC/MODE = 0 (SB15 Closed) = PWM MODE 500mA

VDD_MCU_SELECTION AND CURRENT MEASUREMENT

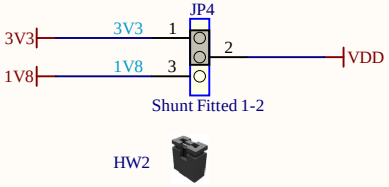

VDD table	JP4
VDD = 3V3	[1-2]
VDD = 1V8	[2-3]

Title: **POWER_BOARD**		
Project: **Nucleo-144_Q (int-SMPS)**		
Variant: U5A5ZJQ		
Revision: C-04		Reference: MB1549
Size: A4	Date: 27-Sept-22	Sheet: 7 of 8

life.augmented

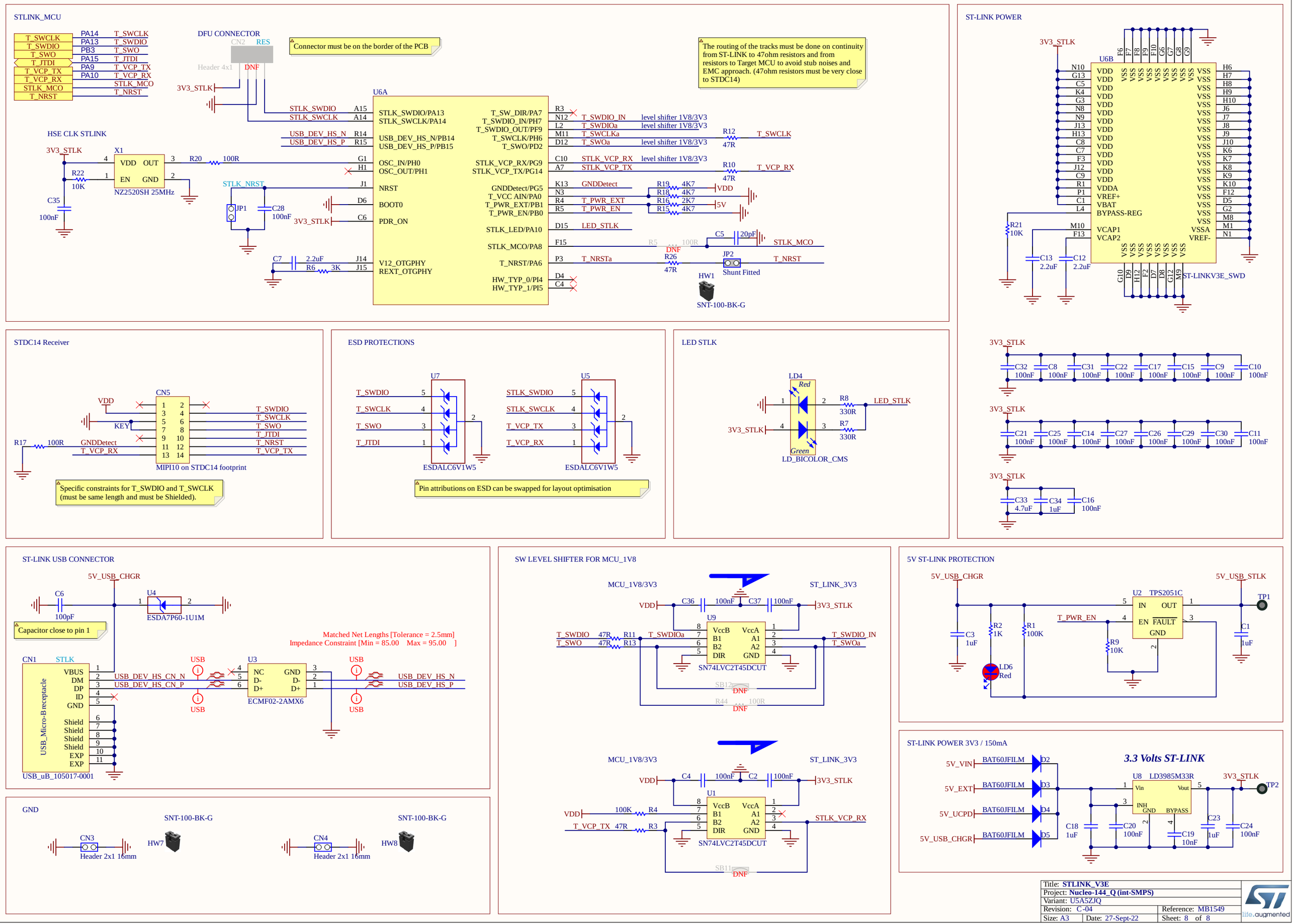

Title: STLINK_V3E	
Project: Nucleo-144_Q (int-SMPS)	
Variant: U5A5ZJQ	
Revision: C-04	Reference: MB1549
Size: A3 Date: 27-Sept-22	Sheet: 8 of 8

life.augmented

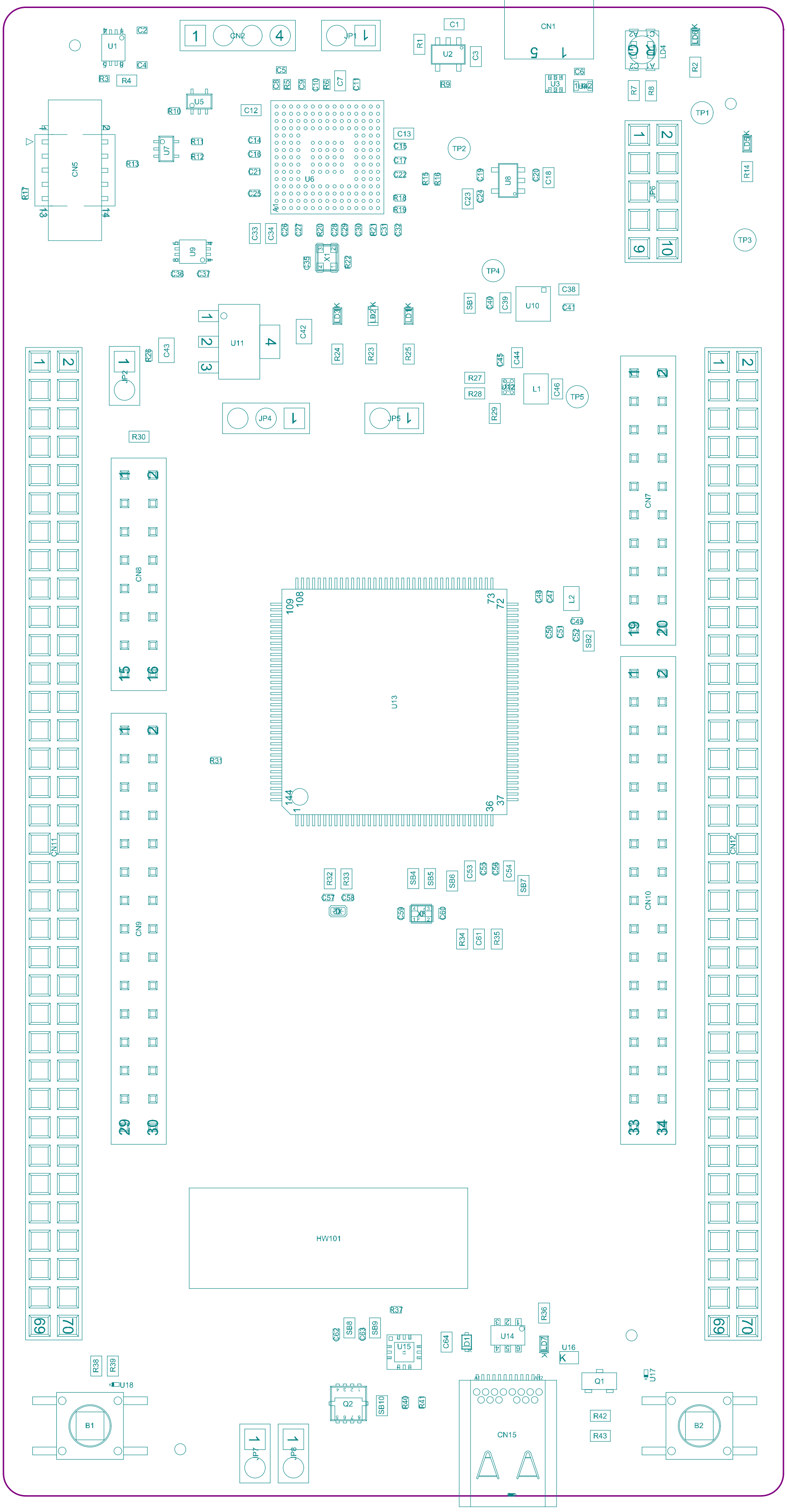

Project: Nucleo-144_Q (int-SMPS)	
Layer: M14-Top Assembly	Gerber: .GM14
Variant: [No Variations]	Ref: MB1549
Date: 27-Sept-22	Rev: C

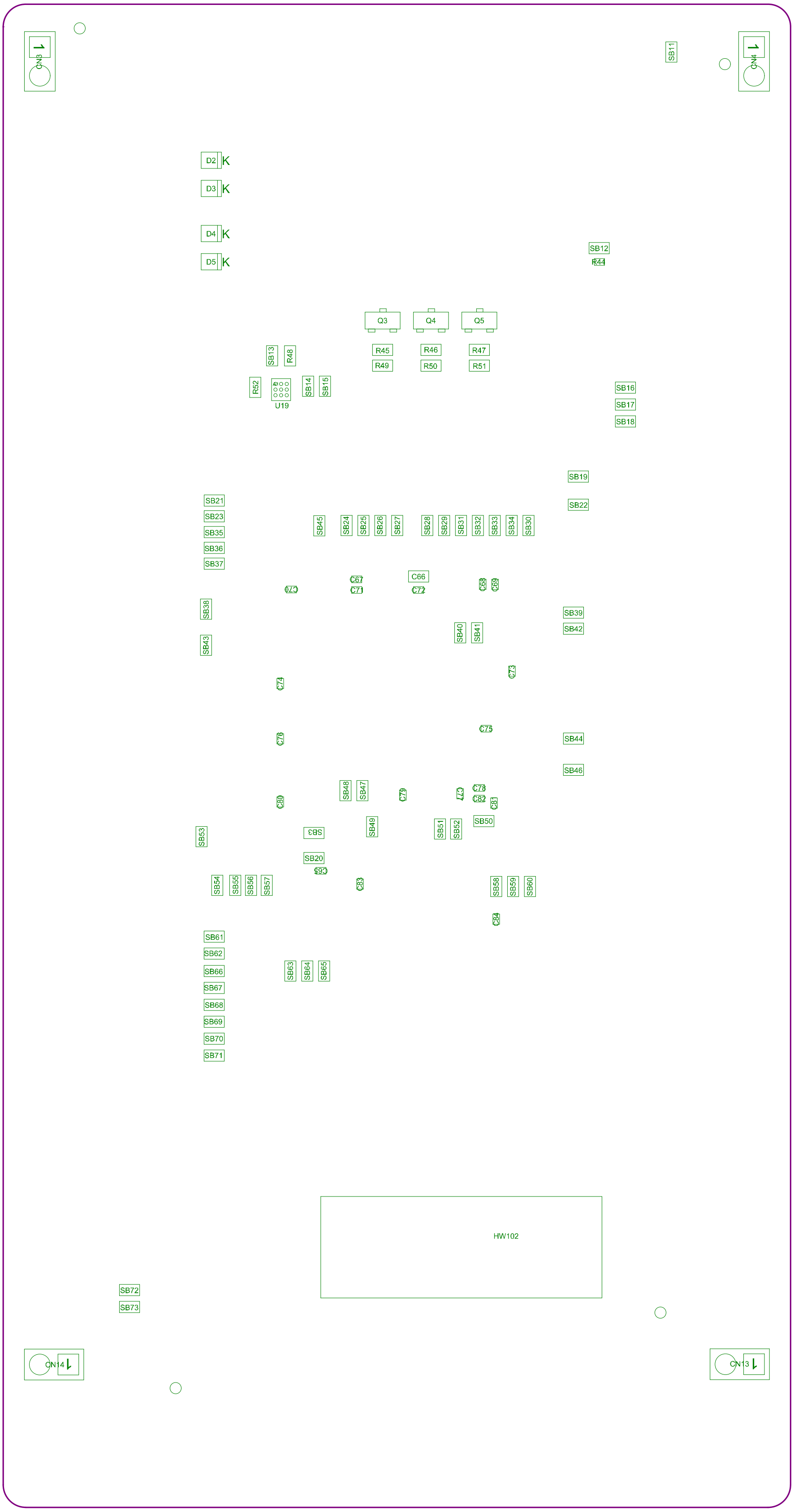

Project: Nucleo-144_Q (int-SMPS)	
Layer: M15-Bottom Assembly	Gerber:.GM15
Variant: [No Variations]	Ref: MB1549
Date: 27-Sept-22	Rev: C