STM32H735G-DK

MB1520

Table of contents

Sheet 1: Project overview (this page)

Sheet 2: TOP

Sheet 3: STM32 microcontroller IOs

Sheet 4: STM32 microcontroller Power

Sheet 5: Ethernet

Sheet 6: PoE

Sheet 7: USB OTG FS

Sheet 8: FDCAN

Sheet 9: OCSPI

Sheet 10: HyperRAM

Sheet 11: microSD CARD

Sheet 12: LCD

Sheet 13: Audio

Sheet 14: STMod+

Sheet 15: TAG

Sheet 16: Arduino Connector

Sheet 17: ST-LINK/V3E-SWD Module

Sheet 18: ST-LINK/V3E Power

Sheet 19: HW Mechanical parts

Top
TOP.SchDoc

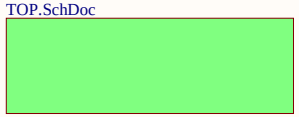

Legend

General comment such as function title, configuration, ...

Text to be added to silkscreen.

Warning text.

Notes to generate the board layout.

OPEN PLATFORM LICENSE AGREEMENT

The Open Platform License Agreement (“Agreement”) is a binding legal contract between you ("You") and STMicroelectronics International N.V. (“ST”), a company incorporated under the laws of the Netherlands acting for the purpose of this Agreement through its Swiss branch 39, Chemin du Champ des Filles, 1228 Plan-les-Ouates, Geneva, Switzerland.

By using the enclosed reference designs, schematics, PC board layouts, and documentation, in hardcopy or CAD tool file format (collectively, the “Reference Material”), You are agreeing to be bound by the terms and conditions of this Agreement. Do not use the Reference Material until You have read and agreed to this Agreement terms and conditions. The use of the Reference Material automatically implies the acceptance of the Agreement terms and conditions.

The complete Open Platform License Agreement can be found on www.st.com/opla.

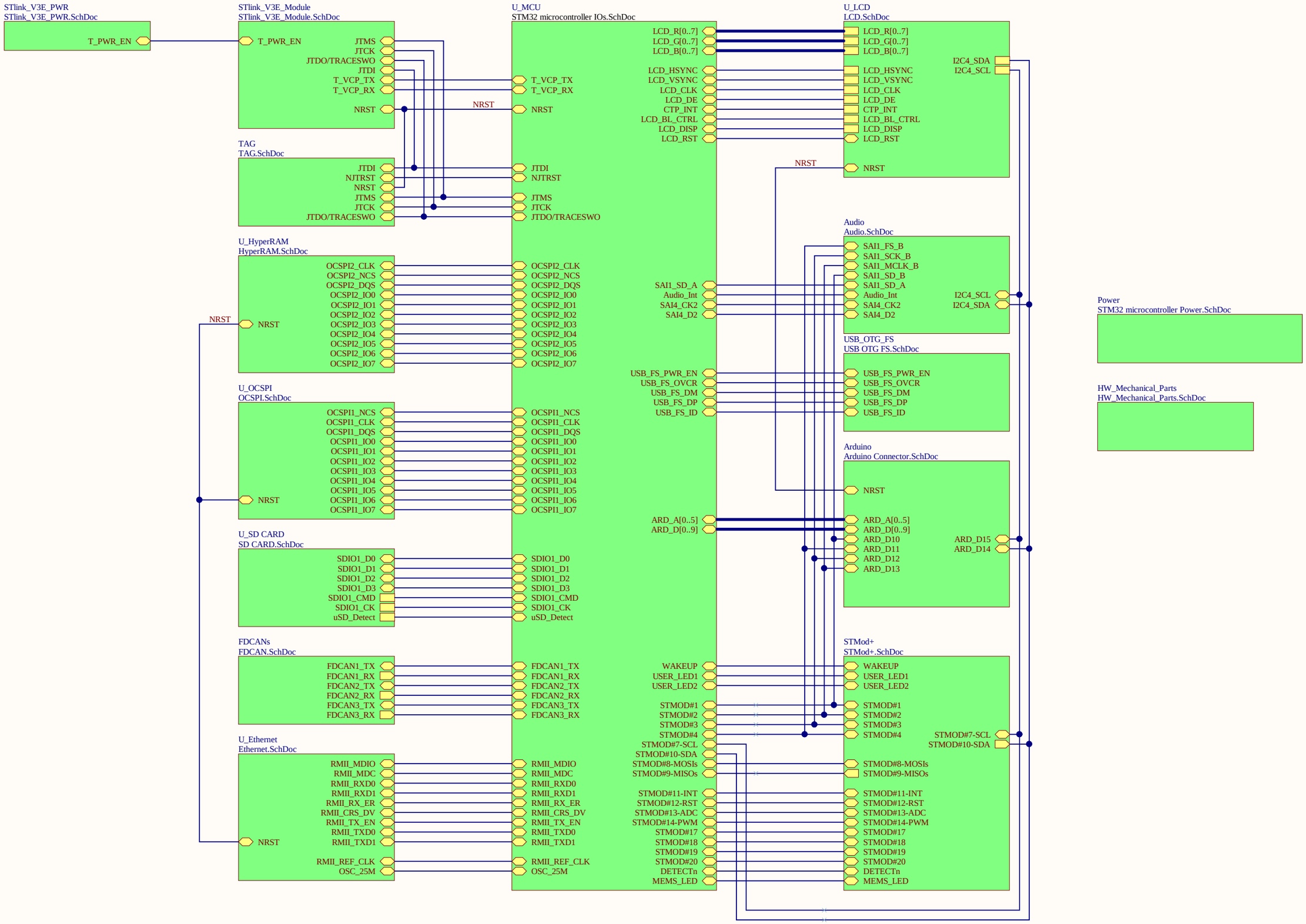

Title: **TOP**		
Project: **STM32H735G-DK**		
Variant: H735I		
Revision: C-02		Reference: MB1520
Size: A3	Date: 2020-SEP-22	Sheet: 2 of 19

life.augmented

MCU IOs

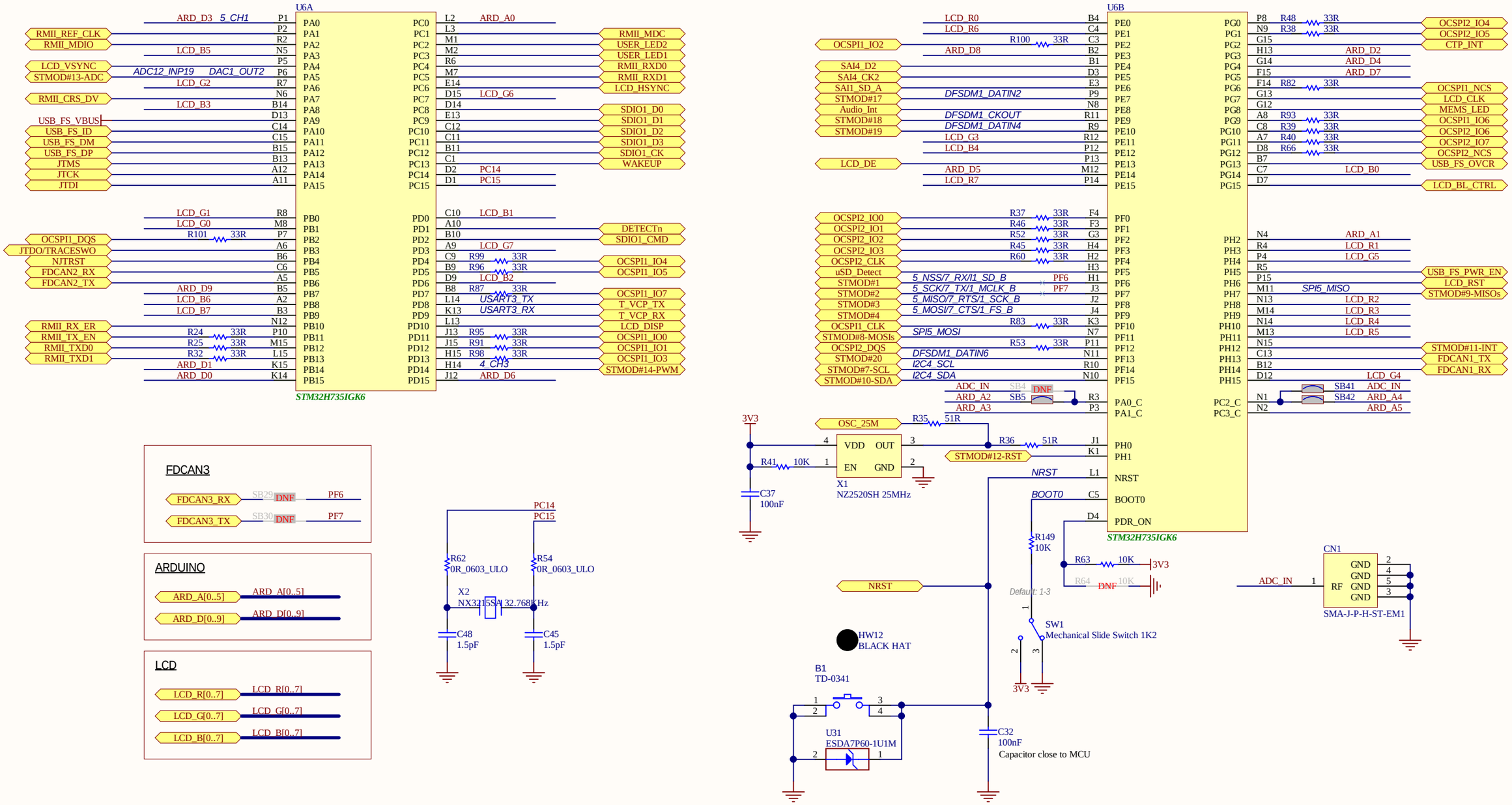

Title: **STM32 microcontroller IOs**		
Project: **STM32H735G-DK**		
Variant: H735I		
Revision: C-02		Reference: MB1520
Size: A3	Date: 2020-SEP-22	Sheet: 3 of 19

life.augmented

MCU POWER

NOTE :
LDO mode:
. SB19, SB3, SB1: Fitted
. SB20, SB2, SB18, SB16, SB21: Not Fitted

SMPS mode (default configuration):
. SB20, SB2, SB21, SB13, L3: Fitted
. SB19, SB3, SB16, SB18, SB1: Not Fitted

SMPS + LDO mode
. SB19, SB3, SB21, SB13, L3: Fitted
. SB18, SB20, SB2, SB16, SB1: Not Fitted

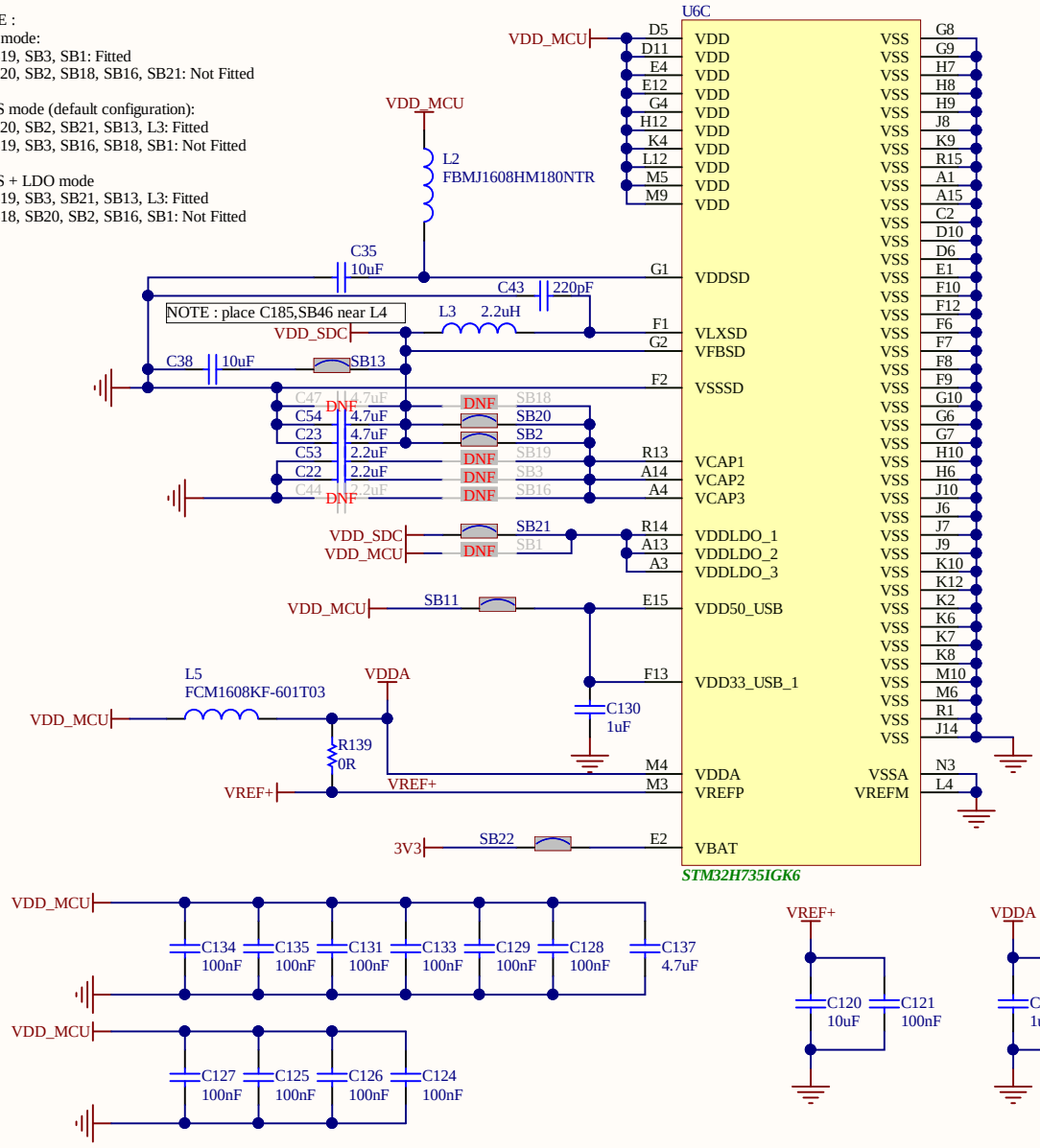

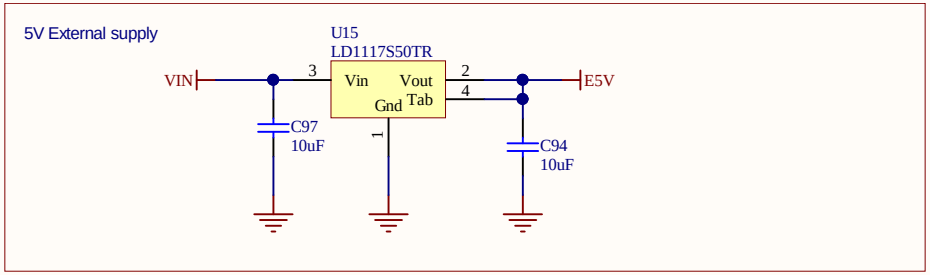

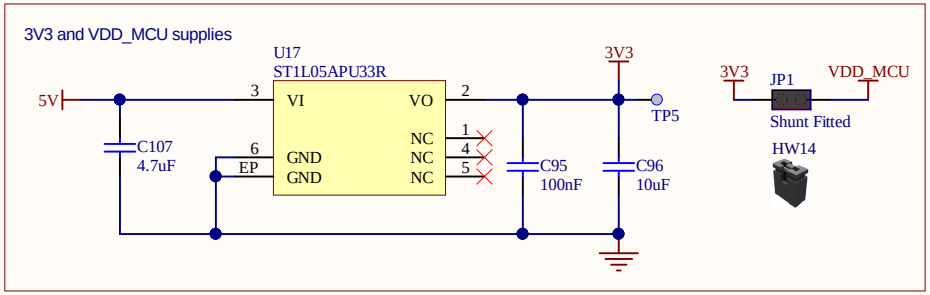

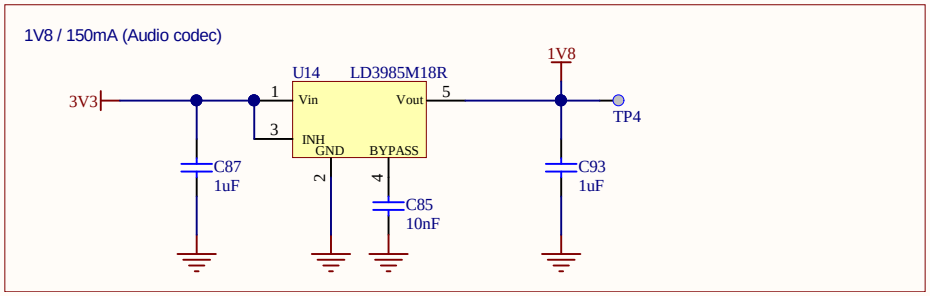

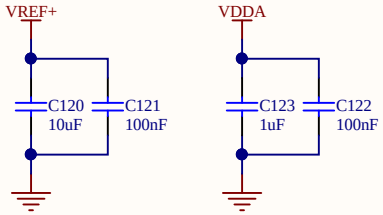

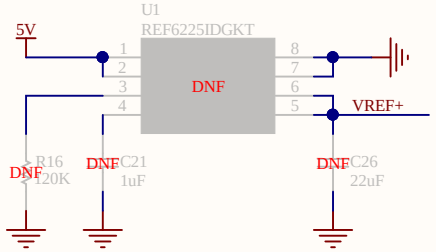

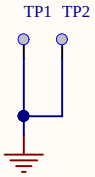

Title: **STM32 microcontroller Power**		
Project: **STM32H735G-DK**		
Variant: H735I		
Revision: C-02		Reference: MB1520
Size: A4	Date: 2020-SEP-22	Sheet: 4 of 19

life.augmented

ETHERNET

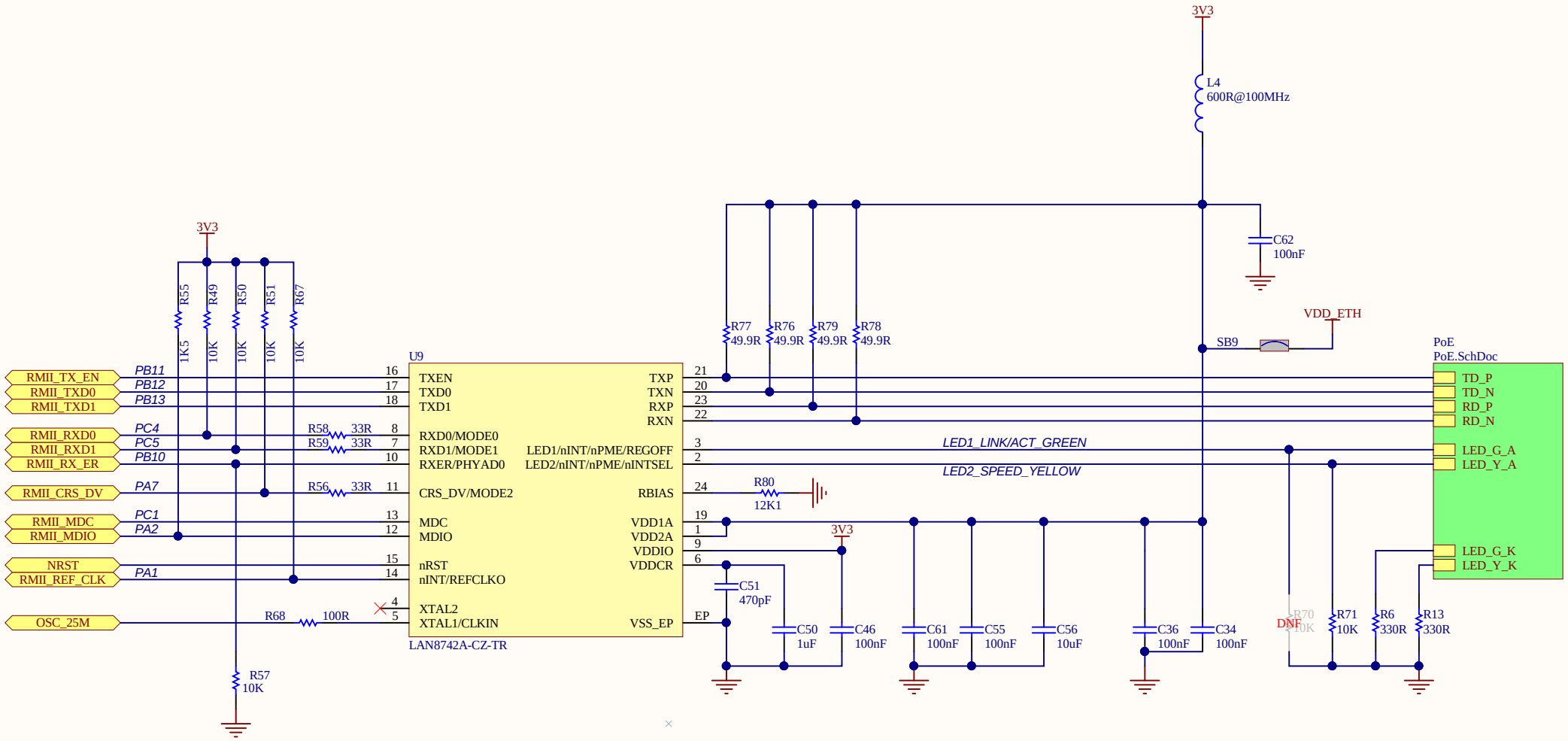

Title: **Ethernet**		
Project: **STM32H735G-DK**		
Variant: H735I		
Revision: C-02		Reference: MB1520
Size: A4	Date: 2020-SEP-22	Sheet: 5 of 19

life.augmented

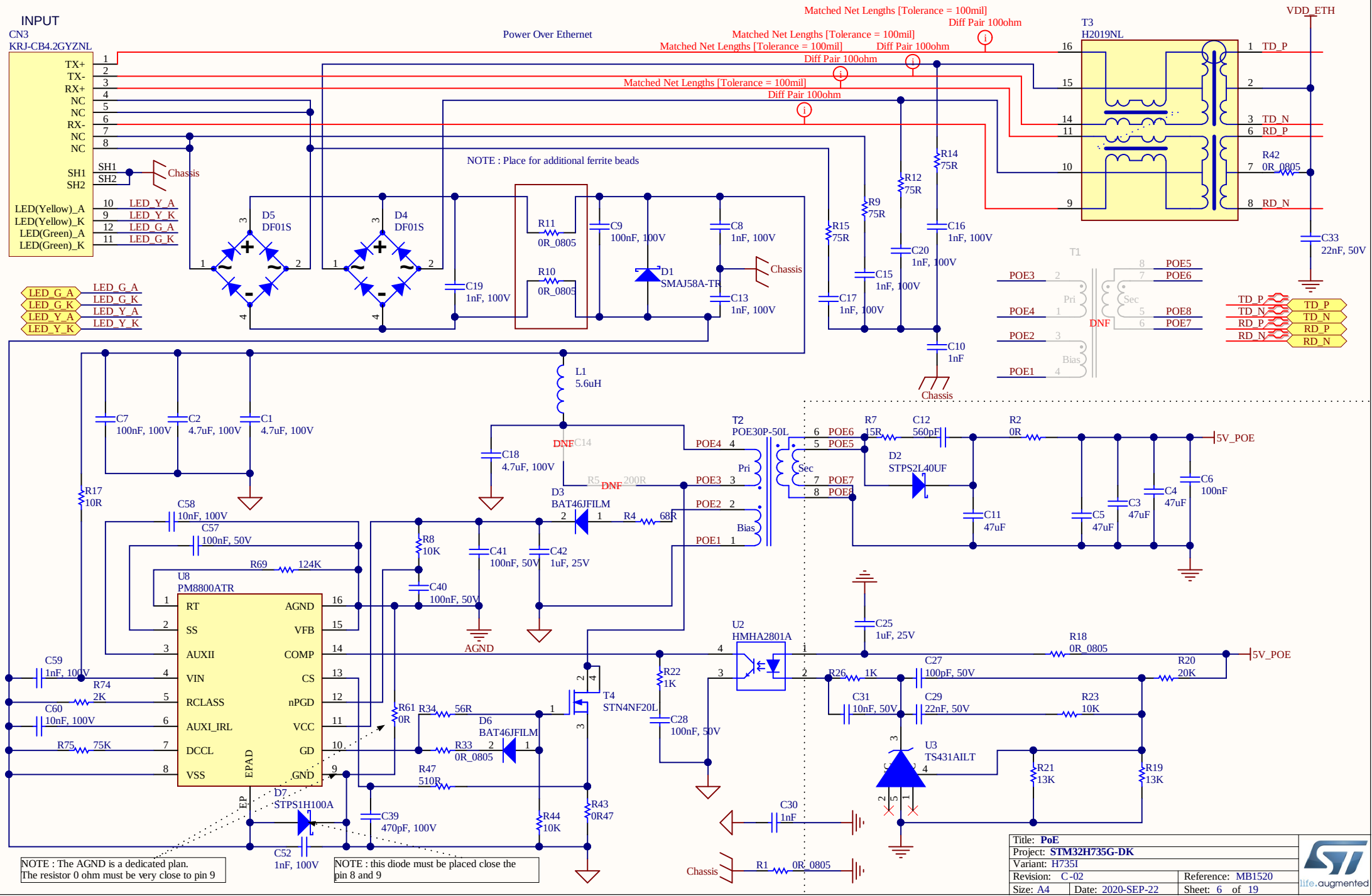
INPUT
CN3
KRJ-CB4.2GYZNL
Power Over Ethernet
Matched Net Lengths [Tolerance = 100mil]
Diff Pair 100ohm
T3
H2019NL
VDD_ETH
TX+
TX-
RX+
NC
RX-
SH1
SH2
Chassis
LED(Yellow)_A
LED(Yellow)_K
LED(Green)_A
LED(Green)_K
LED_Y_A
LED_Y_K
LED_G_A
LED_G_K
D5
DF01S
D4
DF01S
NOTE : Place for additional ferrite beads
R11
0R_0805
R10
0R_0805
C9
100nF, 100V
C8
1nF, 100V
D1
SMAJ58A-TR
C13
1nF, 100V
C19
1nF, 100V
R15
75R
R9
75R
R12
75R
R14
75R
C16
1nF, 100V
C20
1nF, 100V
C15
1nF, 100V
C17
1nF, 100V
C10
1nF
C33
22nF, 50V
R42
0R_0805
TD_P
TD_N
RD_P
RD_N
T1
POE3
POE4
POE2
POE1
POE5
POE6
POE8
POE7
Pri
Sec
Bias
DNF
L1
5.6uH
C7
100nF, 100V
C2
4.7uF, 100V
C1
4.7uF, 100V
C18
4.7uF, 100V
C14
R5
200R
D3
BAT46JFILM
R4
68R
T2
POE30P-50L
R7
15R
C12
560pF
R2
0R
D2
STPS2L40UF
5V_POE
C11
47uF
C5
47uF
C3
47uF
C4
47uF
C6
100nF
R17
10R
C58
10nF, 100V
C57
100nF, 50V
R69
124K
U8
PM8800ATR
RT
SS
AUXII
VIN
RCLASS
AUXI_IRL
DCCL
VSS
EPAD
AGND
VFB
COMP
CS
nPGD
VCC
GD
GND
R8
10K
C41
100nF, 50V
C42
1uF, 25V
C40
100nF, 50V
C59
1nF, 100V
R74
2K
C60
10nF, 100V
R75
75K
R61
0R
R34
56R
D6
BAT46JFILM
R33
0R_0805
R47
510R
D7
STPS1H100A
C39
470pF, 100V
C52
1nF, 100V
T4
STN4NF20L
R22
1K
C28
100nF, 50V
R44
10K
R43
0R47
U2
HMHA2801A
C25
1uF, 25V
R18
0R_0805
R20
20K
R26
1K
C27
100pF, 50V
C31
10nF, 50V
C29
22nF, 50V
R23
10K
U3
TS431AILT
R21
13K
R19
13K
C30
1nF
R1
0R_0805
NOTE : The AGND is a dedicated plan.
The resistor 0 ohm must be very close to pin 9
NOTE : this diode must be placed close the
pin 8 and 9
Title: PoE
Project: STM32H735G-DK
Variant: H735I
Revision: C-02
Reference: MB1520
Size: A4
Date: 2020-SEP-22
Sheet: 6 of 19
life.augmented

USB OTG FS

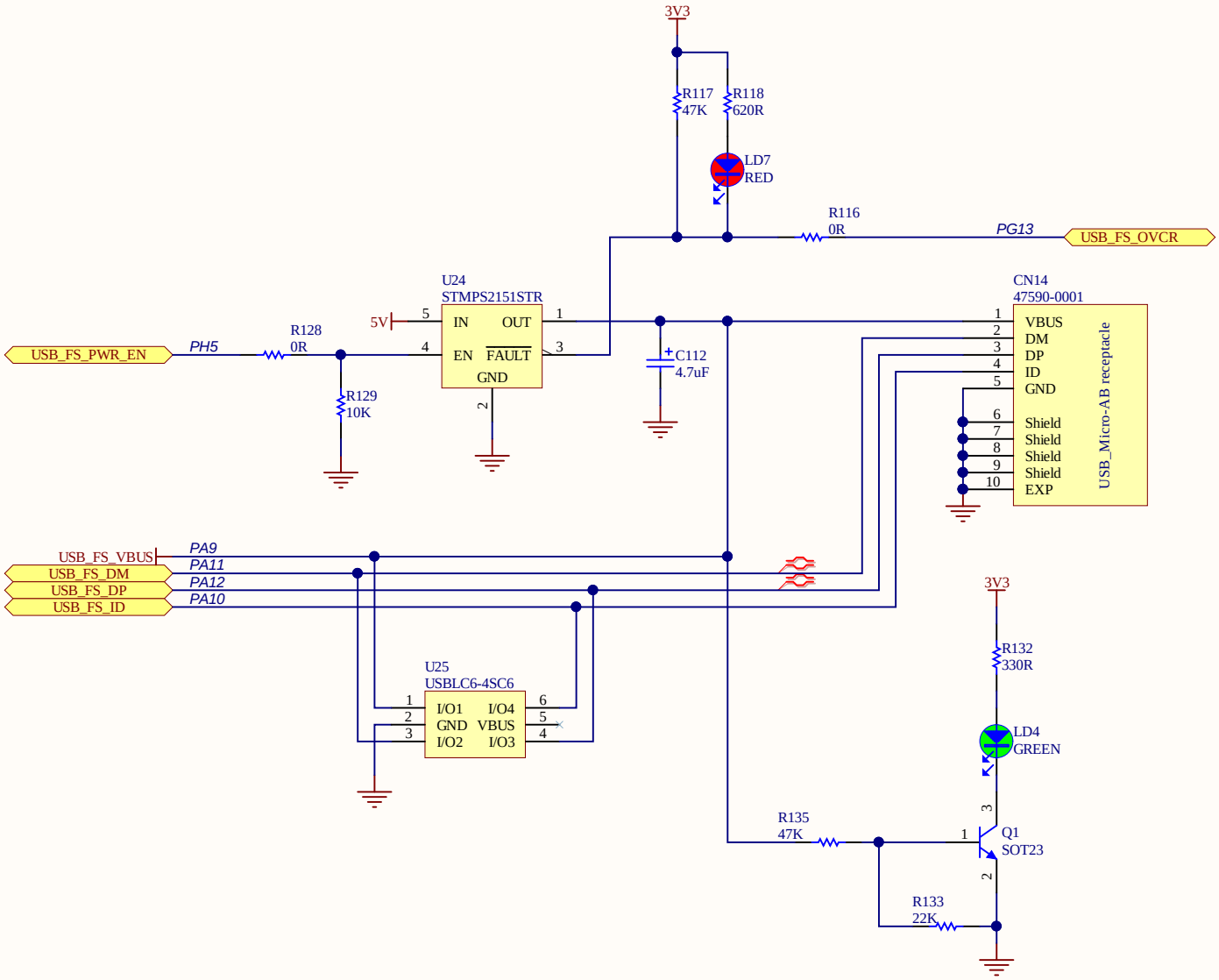

Title: **USB OTG FS**		
Project: **STM32H735G-DK**		
Variant: H735I		
Revision: C-02		Reference: MB1520
Size: A4	Date: 2020-SEP-22	Sheet: 7 of 19

life.augmented

FD-CAN

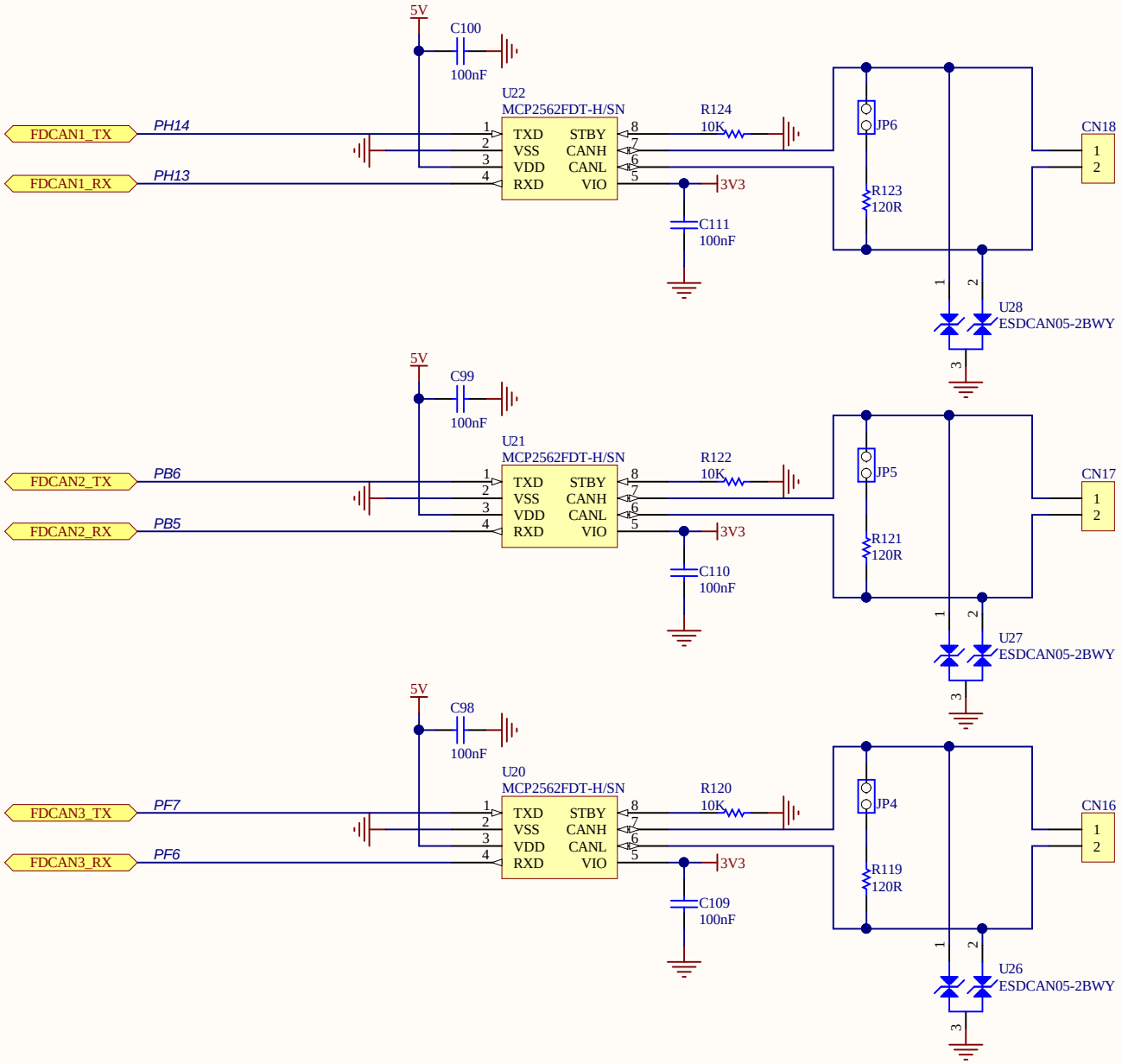

Title: **FDCAN**		
Project: **STM32H735G-DK**		
Variant: H735I		
Revision: C-02		Reference: MB1520
Size: A4	Date: 2020-SEP-22	Sheet: 8 of 19

life.augmented

OCTO-SPI Flash Memory

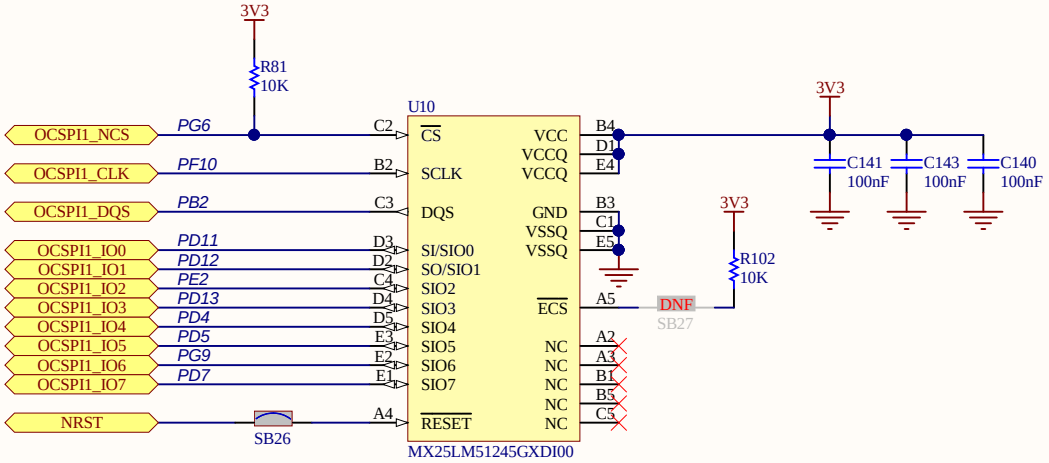

Title: **OCSPI**		
Project: **STM32H735G-DK**		
Variant: H735I		
Revision: C-02		Reference: MB1520
Size: A4	Date: 2020-SEP-22	Sheet: 9 of 19

life.augmented

HyperRAM Memory

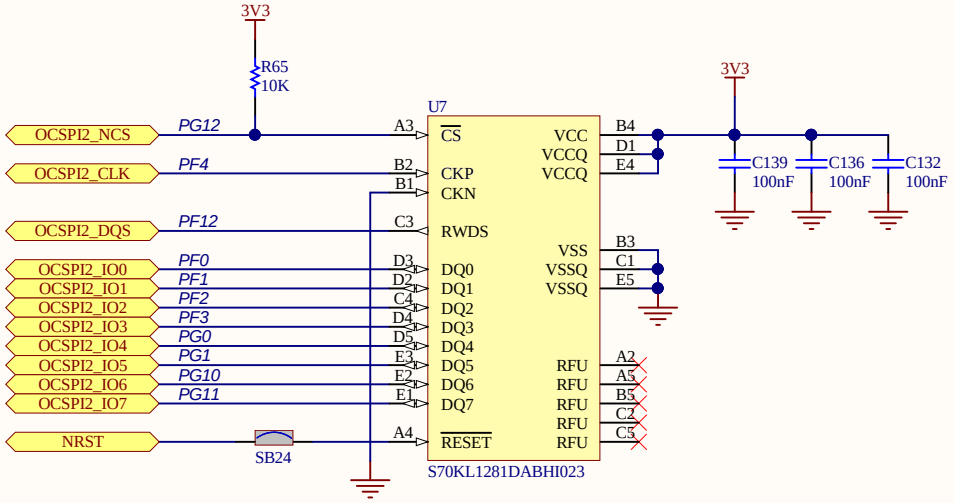

Title: **HyperRAM**		
Project: **STM32H735G-DK**		
Variant: H735I		
Revision: C-02		Reference: MB1520
Size: A4	Date: 2020-SEP-22	Sheet: 10 of 19

life.augmented

uSD CARD

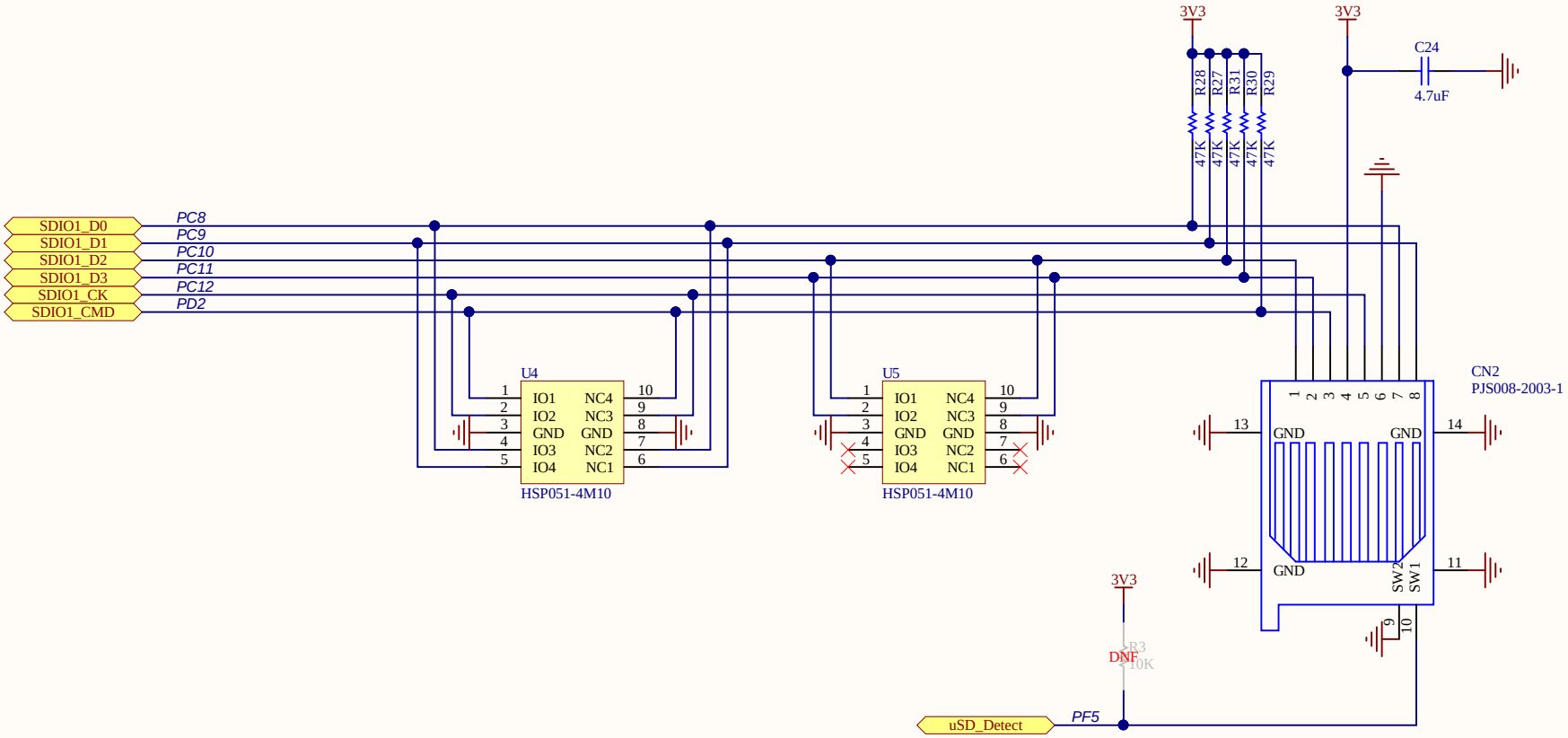

Title: **uSD CARD**		
Project: **STM32H735G-DK**		
Variant: H735I		
Revision: C-02		Reference: MB1520
Size: A4	Date: 2020-SEP-22	Sheet: 11 of 19

life.augmented

LCD

Compatible with MB1315 (4.3 inch LCD board)

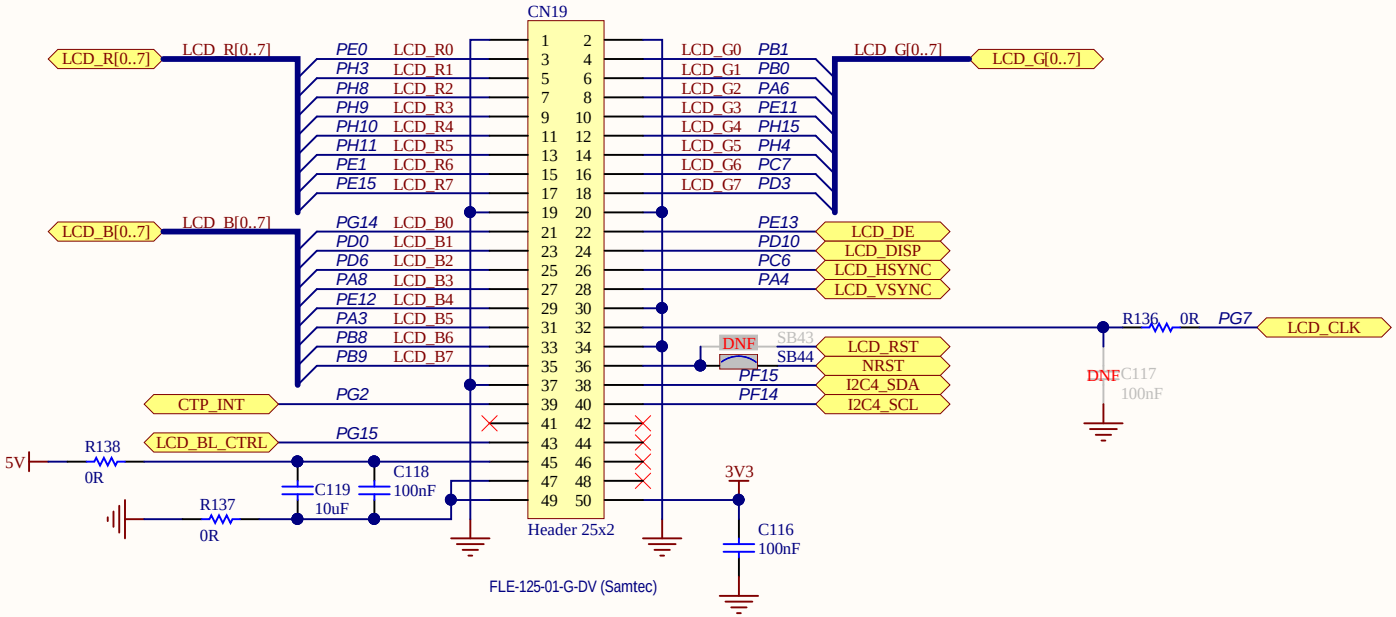

Title: **LCD**		
Project: **STM32H735G-DK**		
Variant: H735I		
Revision: C-02		Reference: MB1520
Size: A4	Date: 2020-SEP-22	Sheet: 12 of 19

life.augmented

AUDIO CODEC

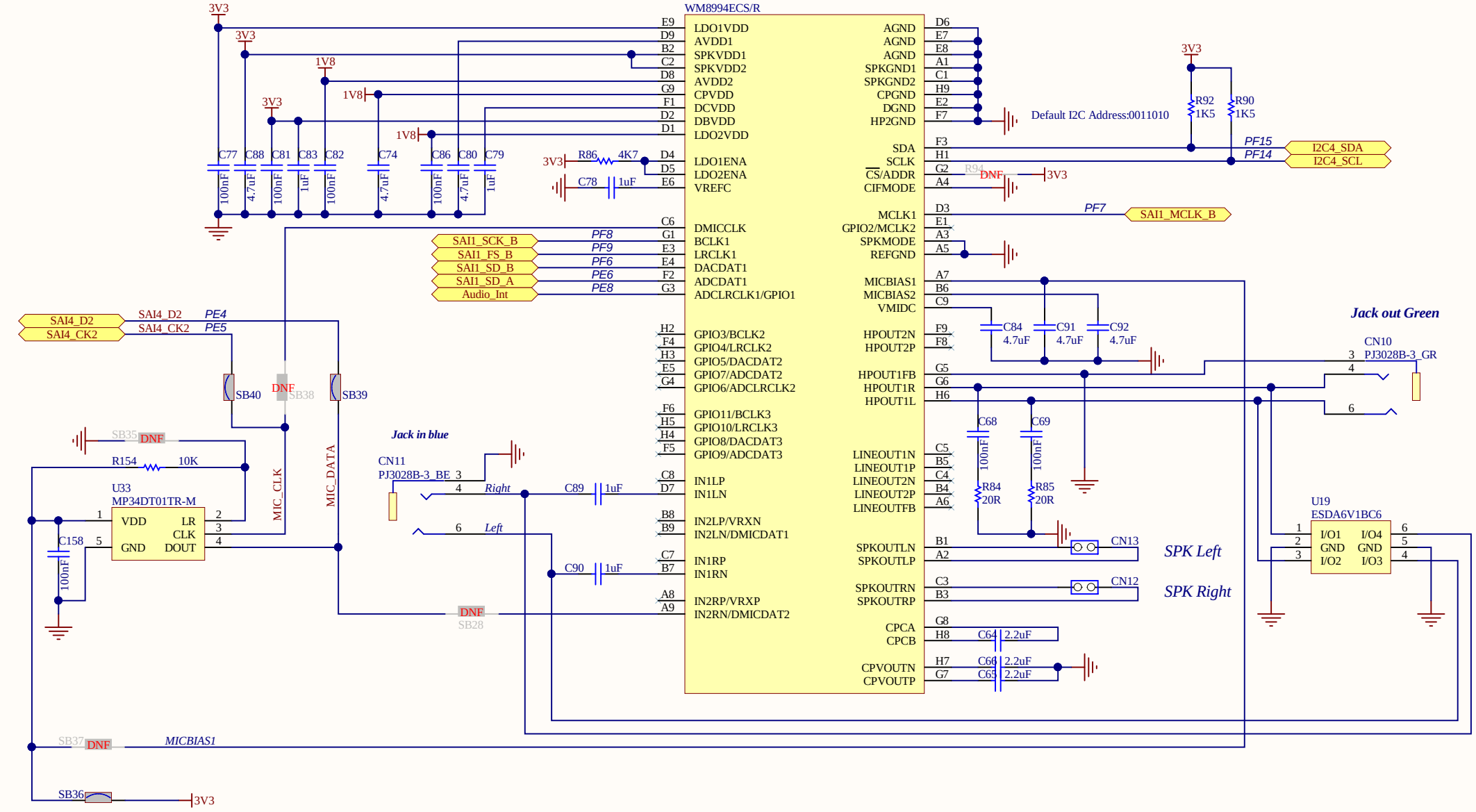

Title: **Audio**		
Project: **STM32H735G-DK**		
Variant: H735I		
Revision: C-02		Reference: MB1520
Size: A4	Date: 2020-SEP-22	Sheet: 13 of 19

life.augmented

PMOD

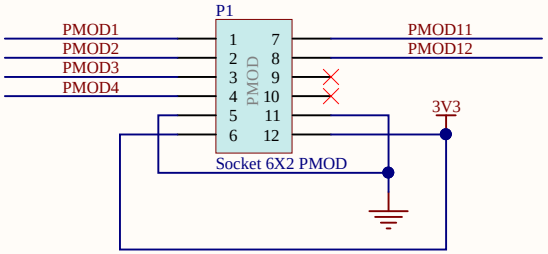

STMOD+

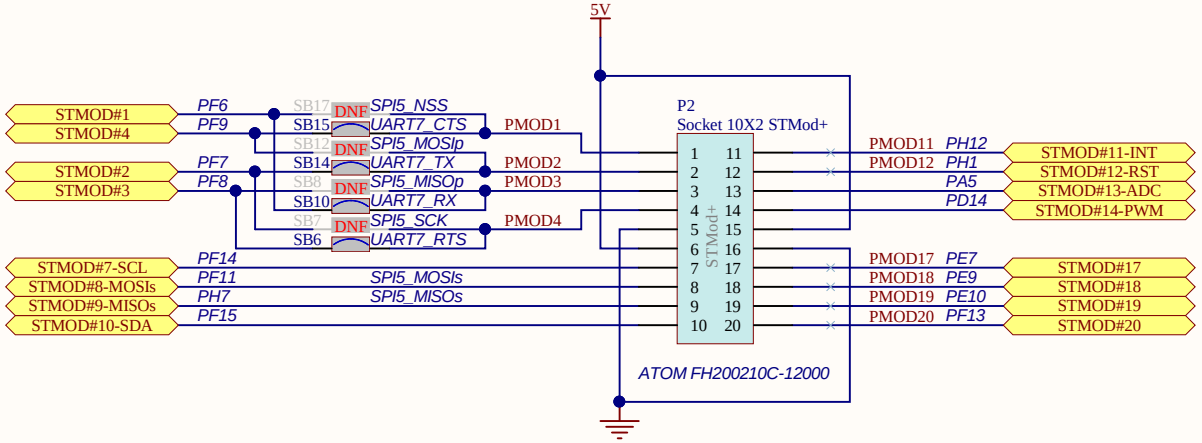

USER BUTTON

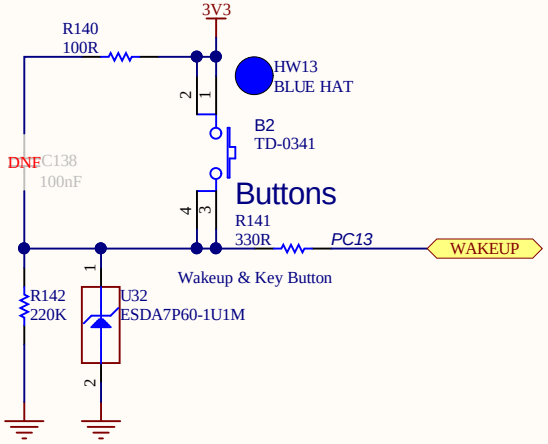

USER LEDs

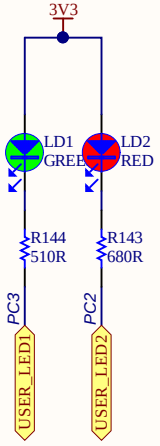

EXTENSION MODULE MB1299

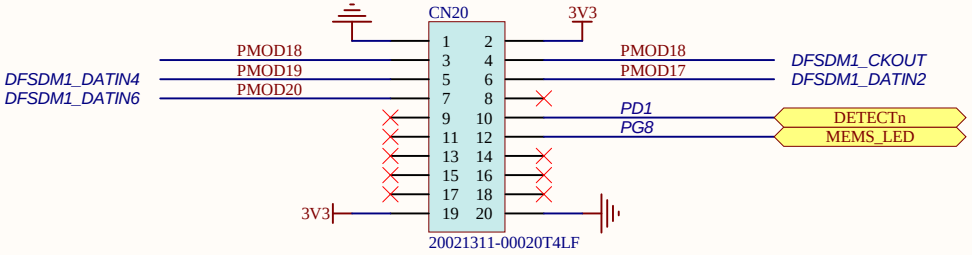

Title: **STMod+**		
Project: **STM32H735G-DK**		
Variant: H735I		
Revision: C-02		Reference: MB1520
Size: A4	Date: 2020-SEP-22	Sheet: 14 of 19

life.augmented

TAG

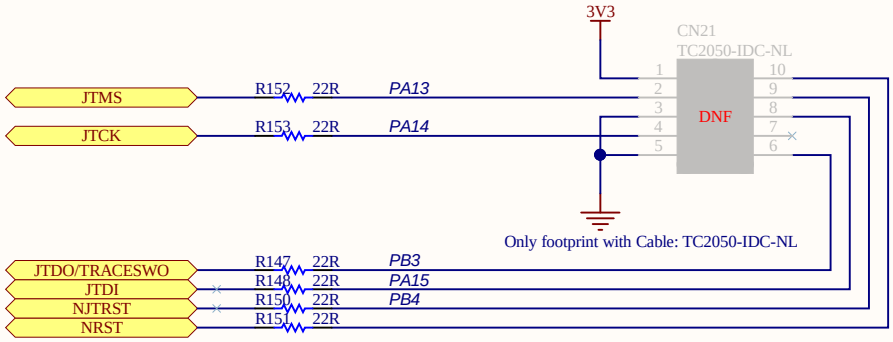

Place this connector close to STDC, they will share the same ESD components

Title: **TAG**		
Project: **STM32H735G-DK**		
Variant: H735I		
Revision: C-02		Reference: MB1520
Size: A4	Date: 2020-SEP-22	Sheet: 15 of 19

life.augmented

ARDUINO

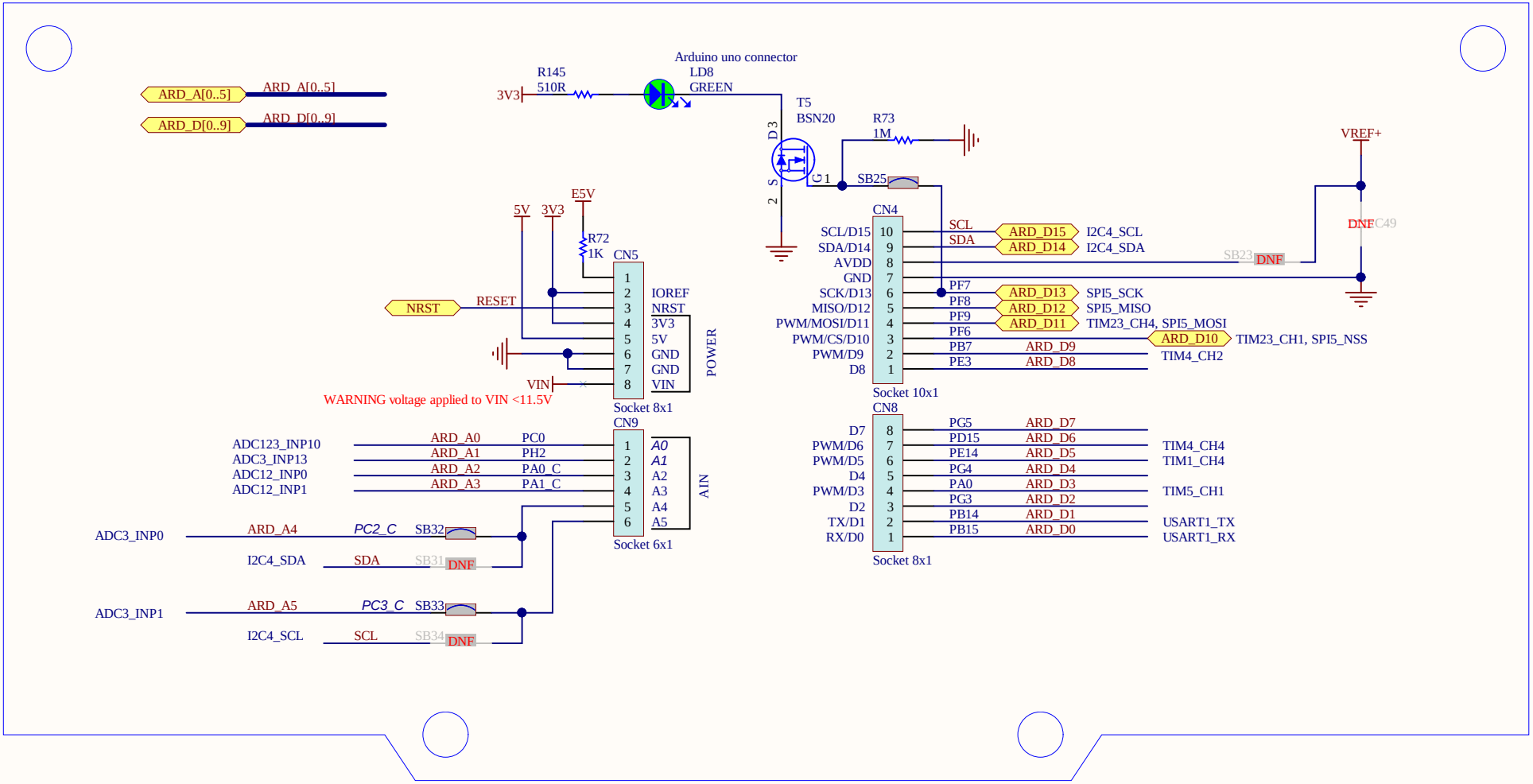

Title: **Arduino Connector**		
Project: **STM32H735G-DK**		
Variant: H735I		
Revision: C-02		Reference: MB1520
Size: A4	Date: 2020-SEP-22	Sheet: 16 of 19

life.augmented

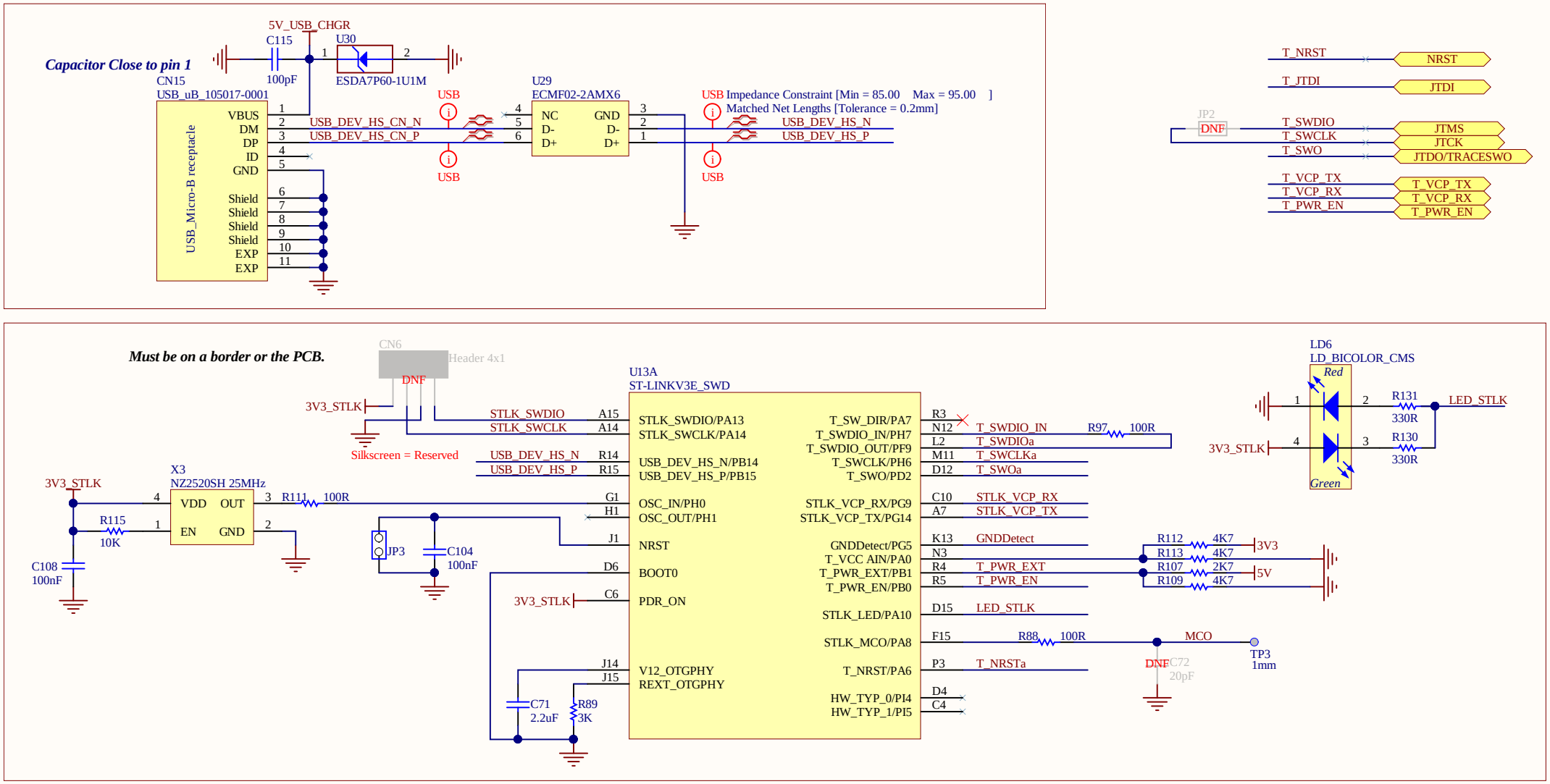

Title: **ST-LINK/V3E-SWD Module**		
Project: **STM32H735G-DK**		
Variant: H735I		
Revision: C-02		Reference: MB1520
Size: A4	Date: 2020-SEP-22	Sheet: 17 of 19

life.augmented

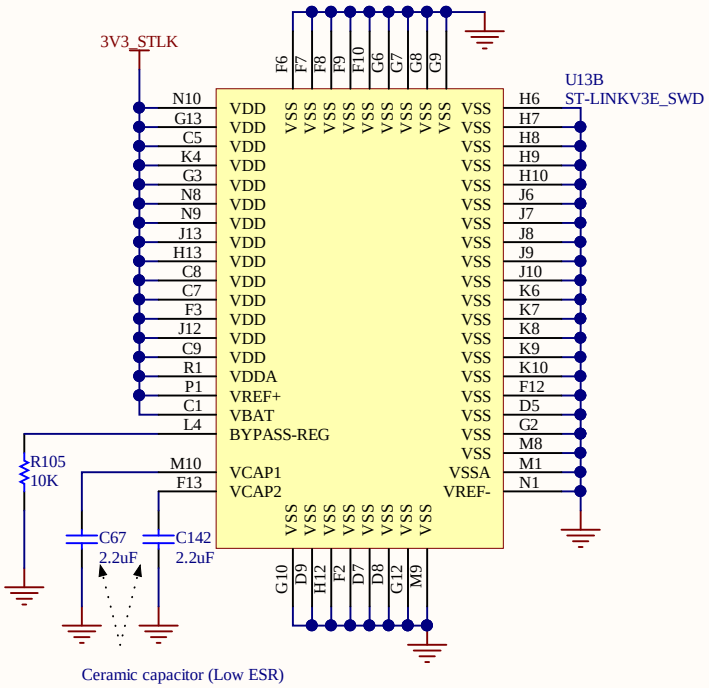

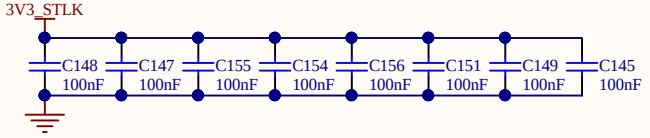

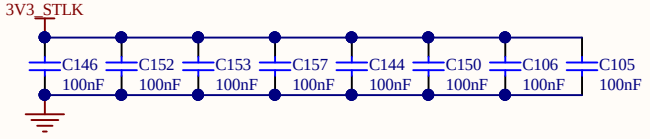

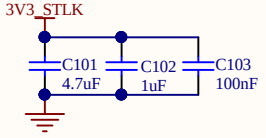

3.3 Volts ST-LINK

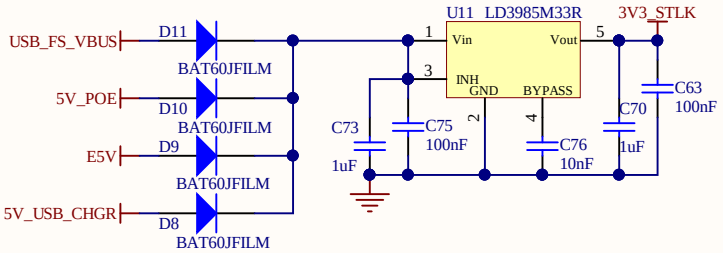

5V ST-LINK PROTECTION

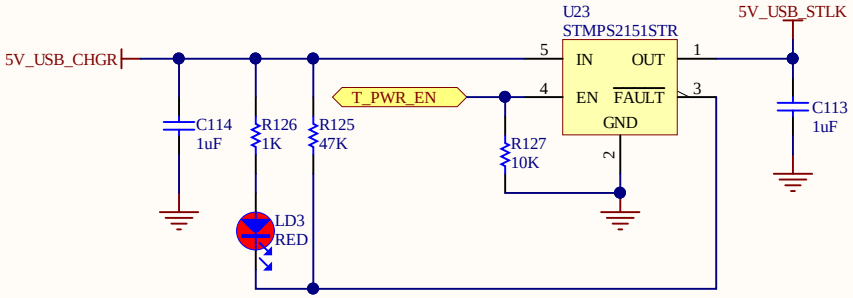

5 Volts Power Supply

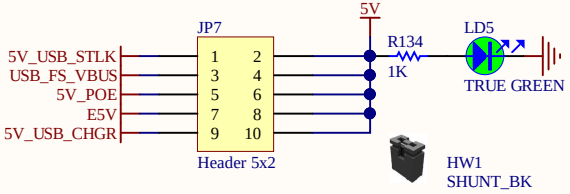

Title: **ST-LINK/V3E-SWD Power Module**		
Project: **STM32H735G-DK**		
Variant: H735I		
Revision: C-02		Reference: MB1520
Size: A4	Date: 2020-SEP-22	Sheet: 18 of 19

life.augmented

HW Mechanical parts

HW6
mbxxxxY
PCB

HW7
MBxxxxy-zz syywwxxxxx
BOARD REF

HW8
STM32H745I-Disco
BOARD CPN

HW4
LOGO ST

HW5
LOGO CE

HW3
LOGO ESD

HW9
LOGO ROHS

HW10
LOGO STM32

H1

H2

H4

H3

Title: **HW Mechanical parts**		
Project: **STM32H735G-DK**		
Variant: H735I		
Revision: C-02		Reference: MB1520
Size: A4	Date: 2020-SEP-22	Sheet: 19 of 19

life.augmented