STM32G081B-EVAL USB-C daughter board

MB1352

Table of contents

Sheet 1: Project overview (this page)

Sheet 2: MB1352_TOP

Sheet 3: CC & VCONN

Sheet 4: PORT1_DP_USB3

Sheet 5: TYPEC_SOURCE_CON

Sheet 6: PORT2_DP

Sheet 7: TYPEC_SINK_CON

Sheet 8: USB_PD

Sheet 9: POWER

Sheet 10: SOURCE POWER

Legend

General comment such as function title, configuration, ...

Text to be added to silkscreen.

Warning text.

Notes to generate the board layout.

Open Platform License Agreement

The Open Platform License Agreement (“Agreement”) is a binding legal contract between you ("You") and STMicroelectronics International N.V. (“ST”), a company incorporated under the laws of the Netherlands acting for the purpose of this Agreement through its Swiss branch 39, Chemin du Champ des Filles, 1228 Plan-les-Ouates, Geneva, Switzerland.

By using the enclosed reference designs, schematics, PC board layouts, and documentation, in hardcopy or CAD tool file format (collectively, the “Reference Material”), You are agreeing to be bound by the terms and conditions of this Agreement. Do not use the Reference Material until You have read and agreed to this Agreement terms and conditions. The use of the Reference Material automatically implies the acceptance of the Agreement terms and conditions.

The complete Open Platform License Agreement can be found on www.st.com/opla.

U_MB1352_TOP
MB1352_TOP.SchDoc

Title: **Project overview**		
Project: **STM32G081B-EVAL USB-C daughter board**		
Variant: Variant name is not interpreted until output		
Revision: C-02		Reference: MB1352
Size: A4	Date: 3-Aug-18	Sheet: 1 of 10

life.augmented

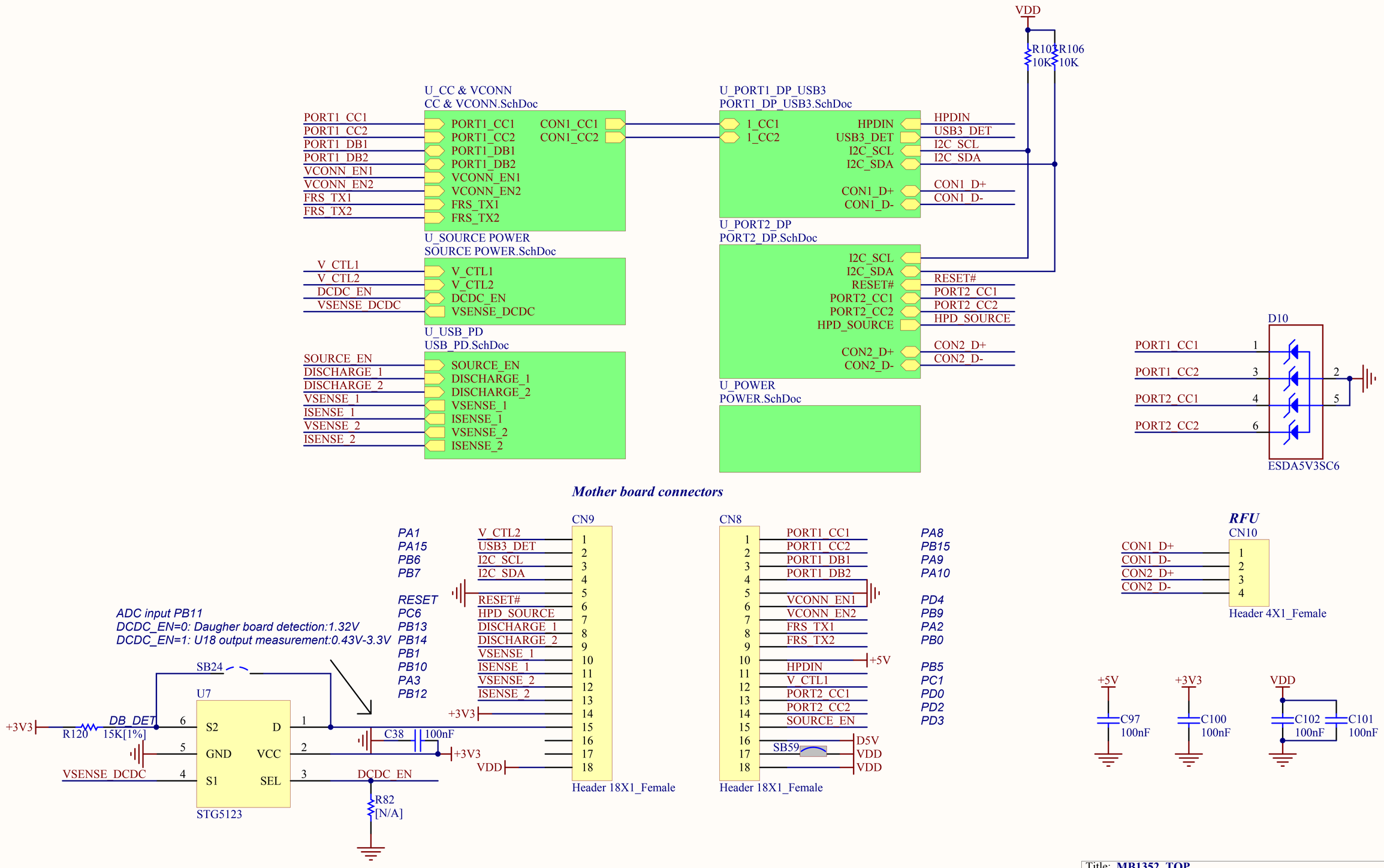

Title: **MB1352_TOP**		
Project: **STM32G081B-EVAL USB-C daughter board**		
Variant: Variant name is not interpreted until output		
Revision: C-02		Reference: MB1352
Size: A4	Date: 3-Aug-18	Sheet: 2 of 10

life.augmented

TYPE-C Source port CC management

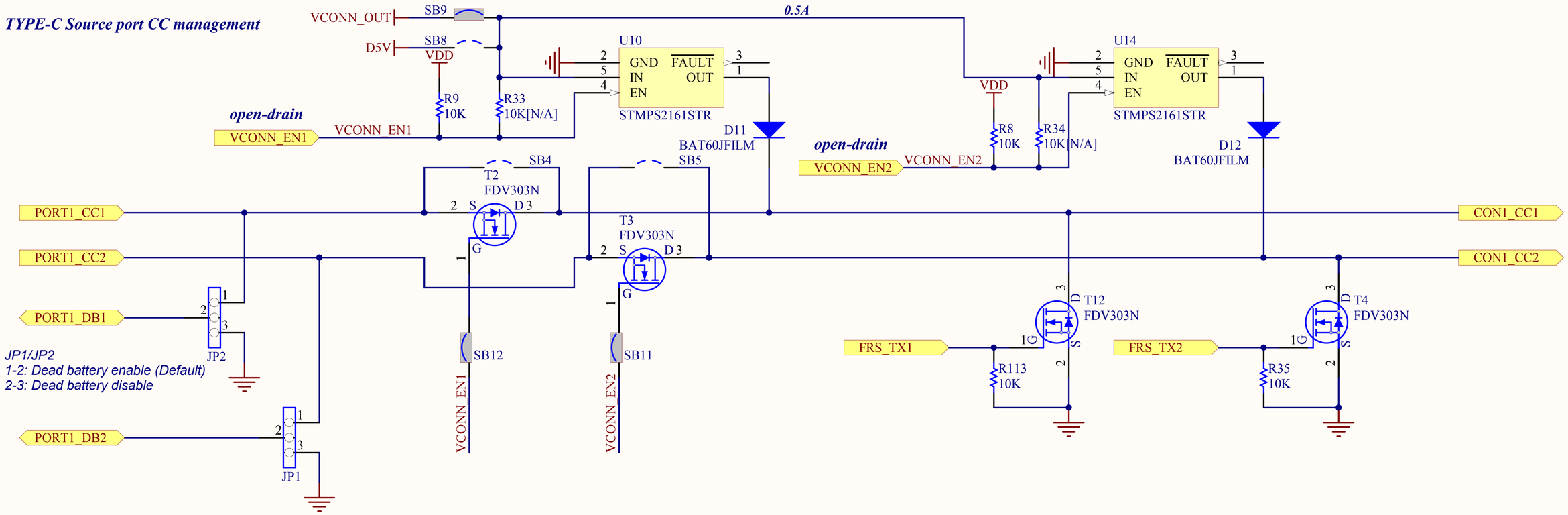

VCONN power

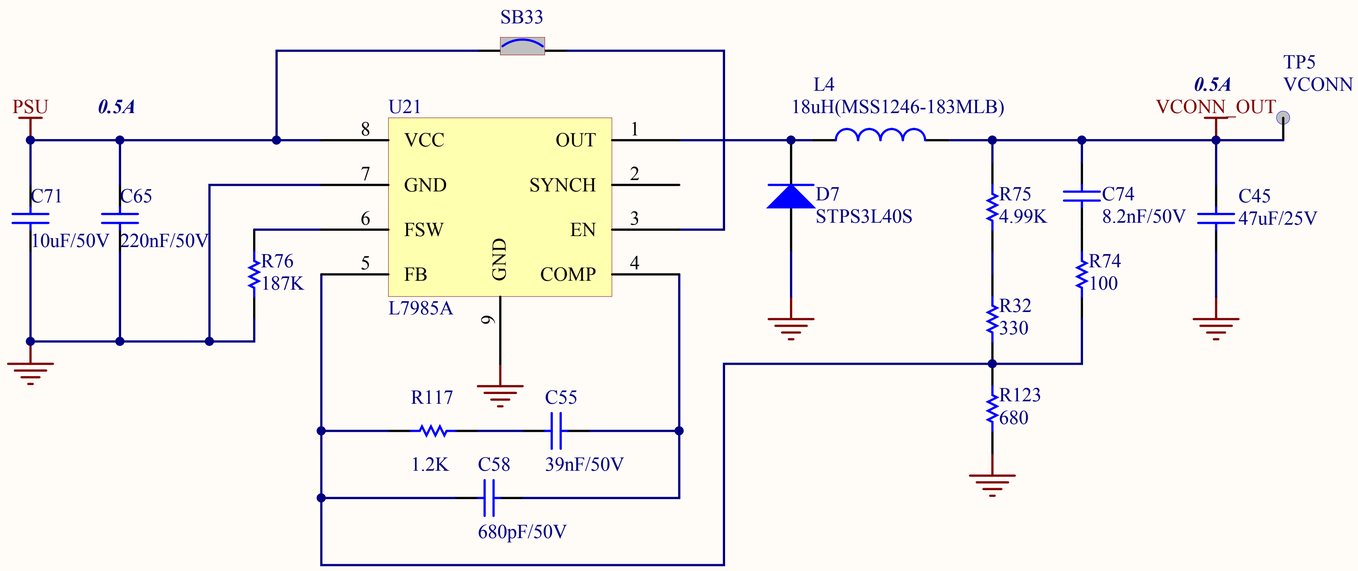

Title: **CC & VCONN**		
Project: **STM32G081B-EVAL USB-C daughter board**		
Variant: Variant name is not interpreted until output		
Revision: C-02		Reference: MB1352
Size: A4	Date: 3-Aug-18	Sheet: 3 of 10

life.augmented

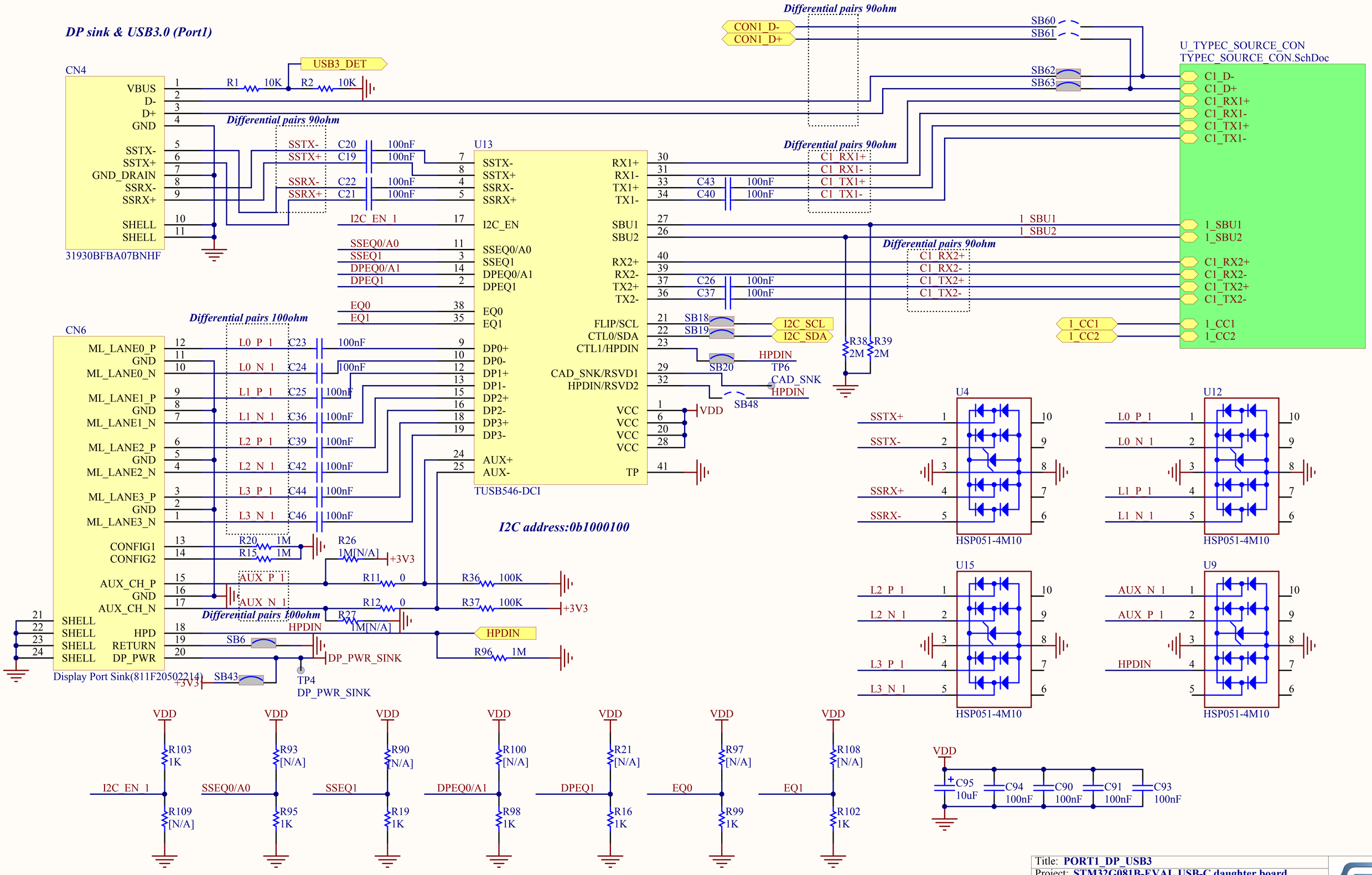

Title: **PORT1_DP_USB3**		
Project: **STM32G081B-EVAL USB-C daughter board**		
Variant: Variant name is not interpreted until output		
Revision: C-02		Reference: MB1352
Size: A4	Date: 3-Aug-18	Sheet: 4 of 10

life.augmented

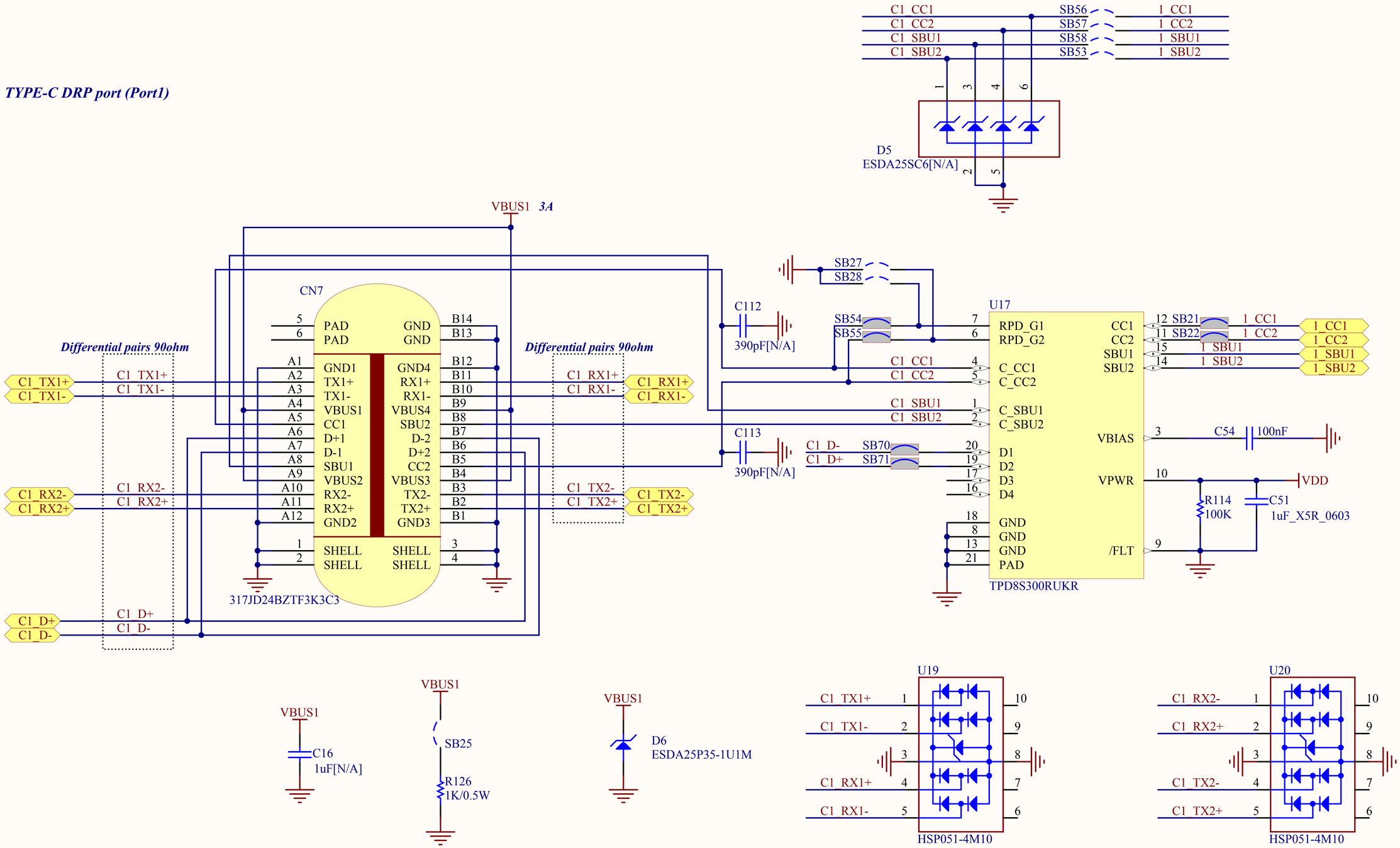

Title: **TYPEC_SOURCE_CON**		
Project: **STM32G081B-EVAL USB-C daughter board**		
Variant: Variant name is not interpreted until output		
Revision: C-02		Reference: MB1352
Size: A4	Date: 3-Aug-18	Sheet: 5 of 10

life.augmented

DP source (Port2)

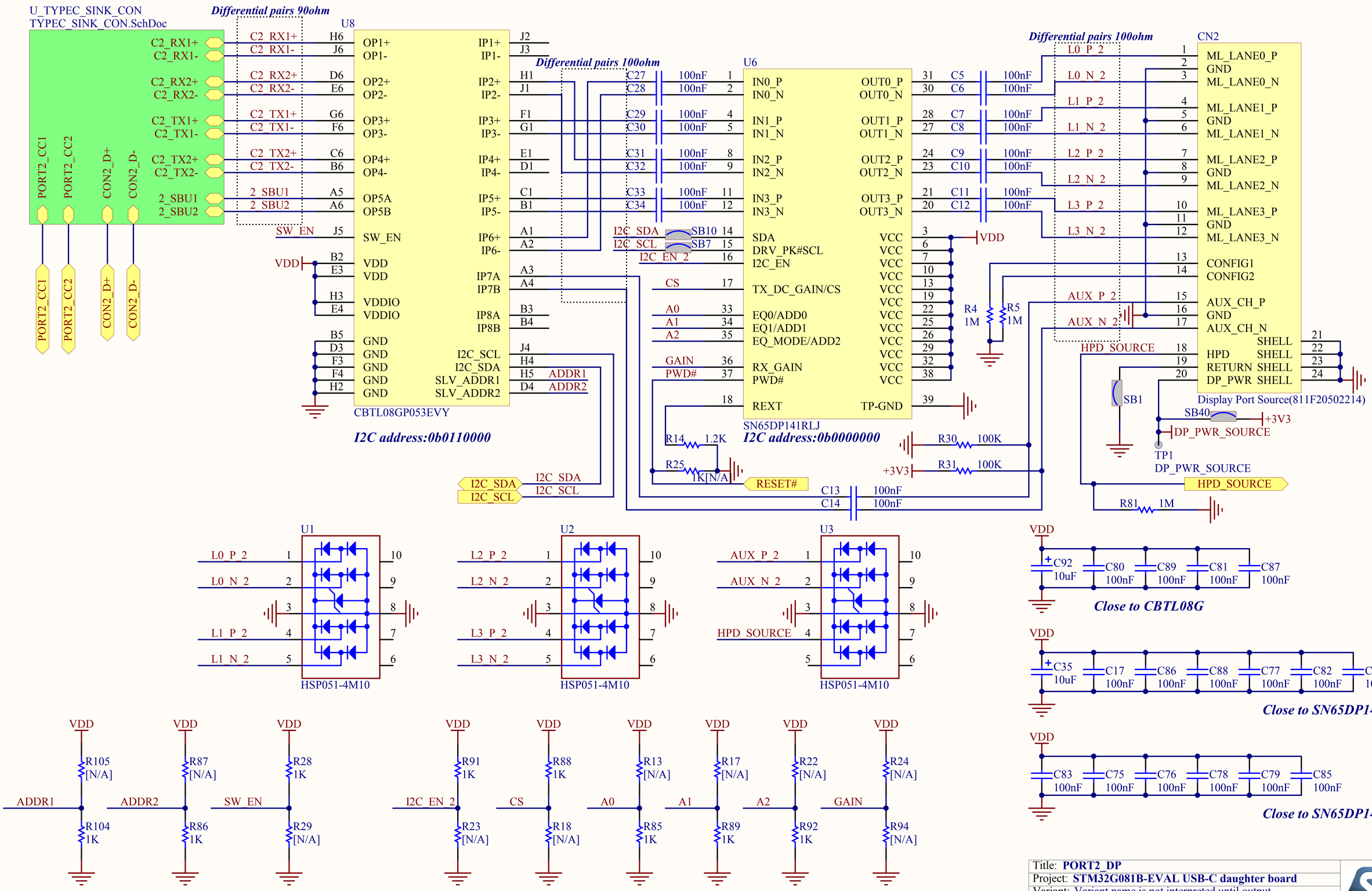

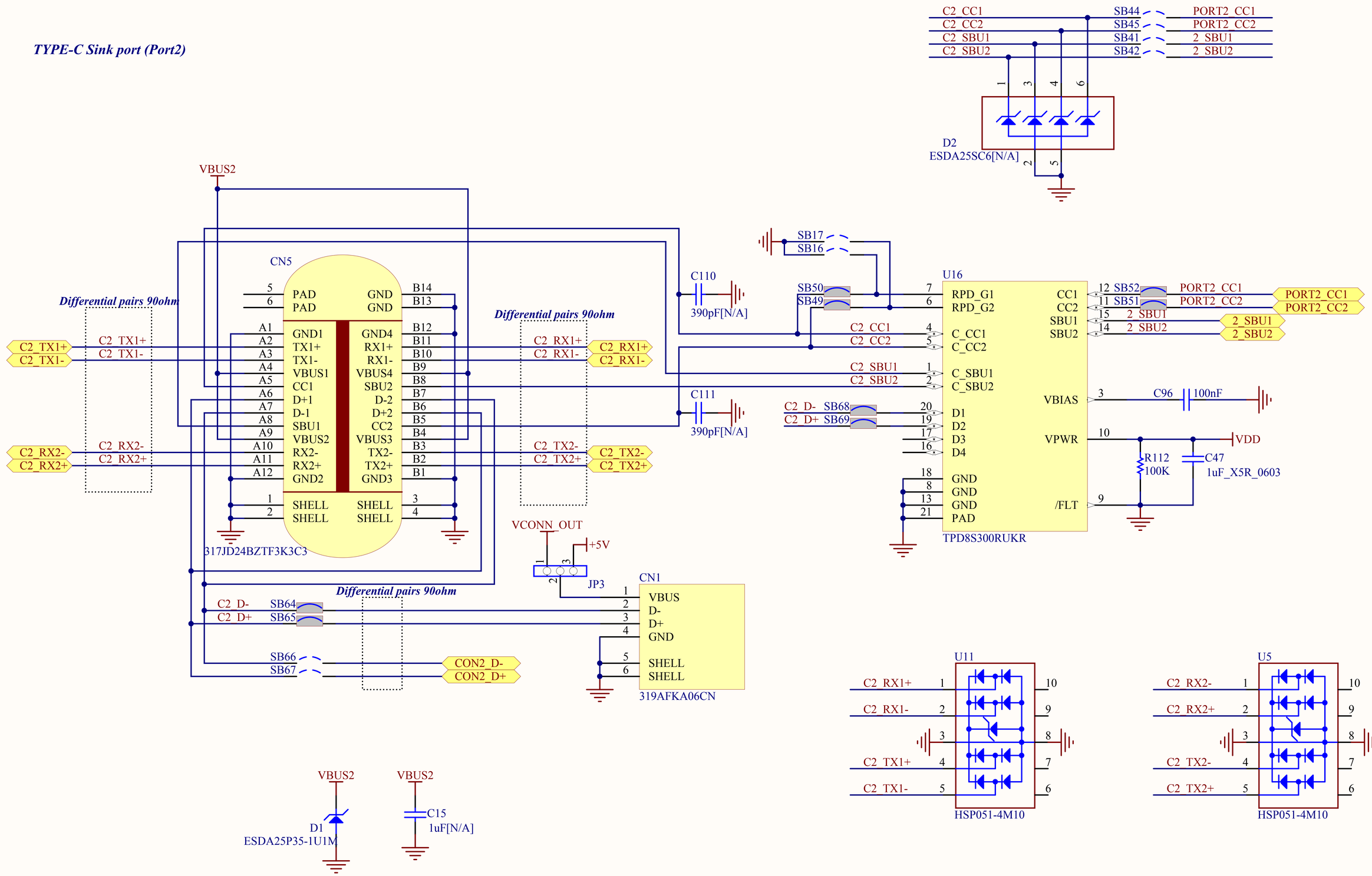

Title: **TYPEC_SINK_CON**		
Project: **STM32G081B-EVAL USB-C daughter board**		
Variant: Variant name is not interpreted until output		
Revision: C-02		Reference: MB1352
Size: A4	Date: 3-Aug-18	Sheet: 7 of 10

life.augmented

Power Delivery management (TypeC Port1)

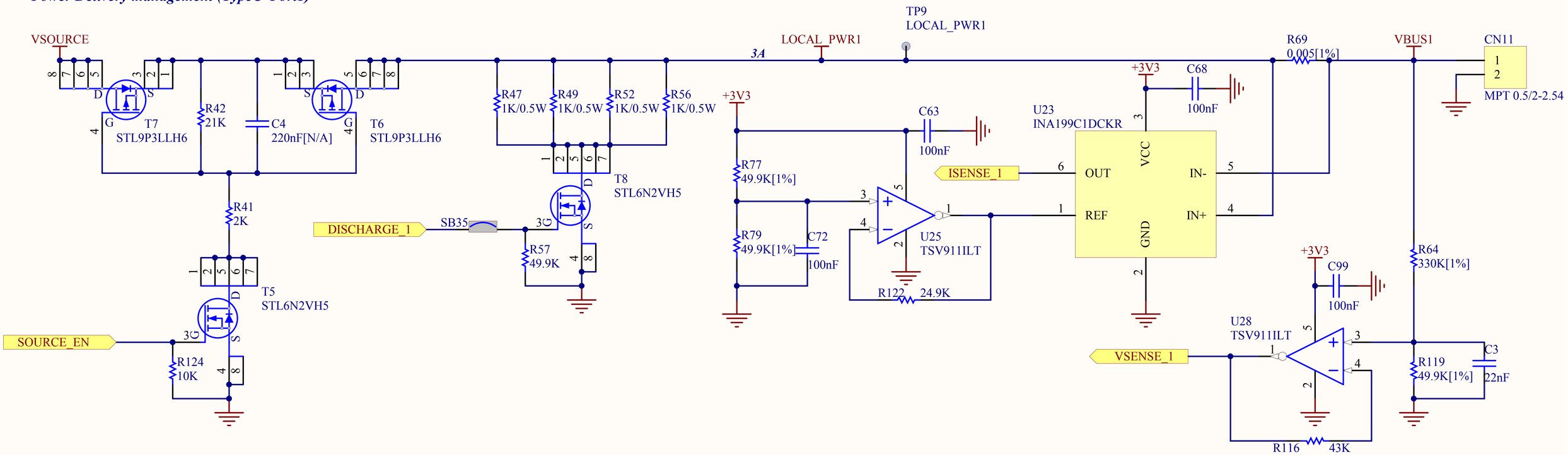

Power Delivery management (TypeC Port2)

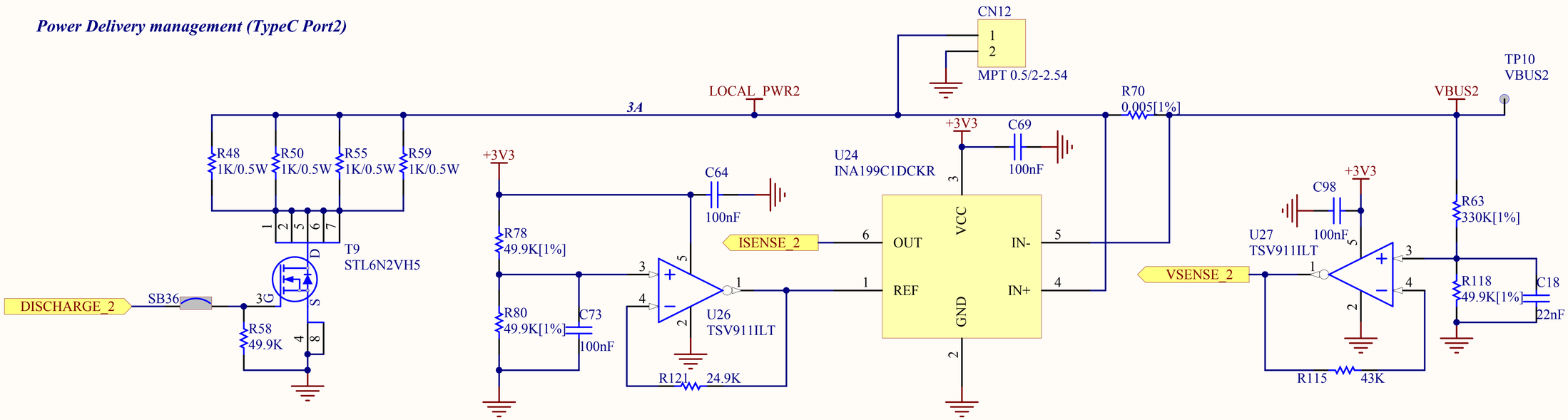

Title: **USB_PD**		
Project: **STM32G081B-EVAL USB-C daughter board**		
Variant: Variant name is not interpreted until output		
Revision: C-02		Reference: MB1352
Size: A4	Date: 3-Aug-18	Sheet: 8 of 10

life.augmented

Power jack input

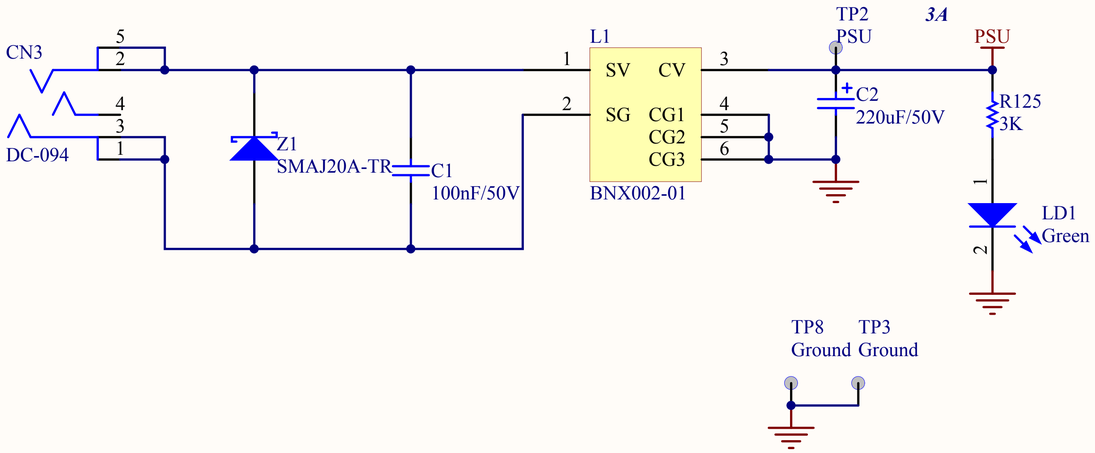

Local power selection

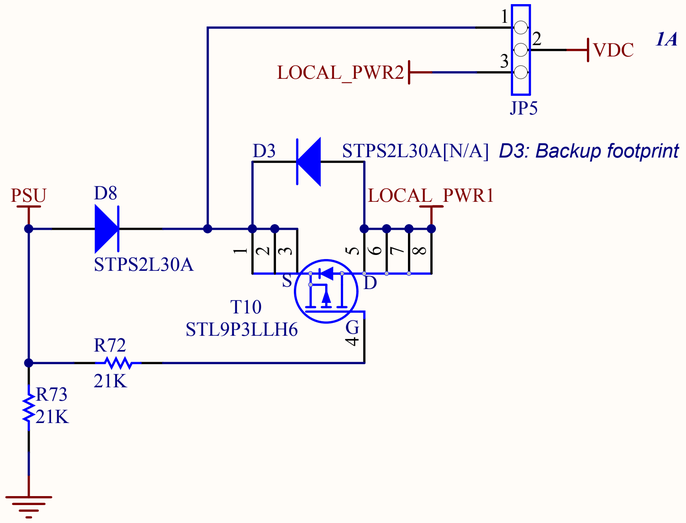

D5V power

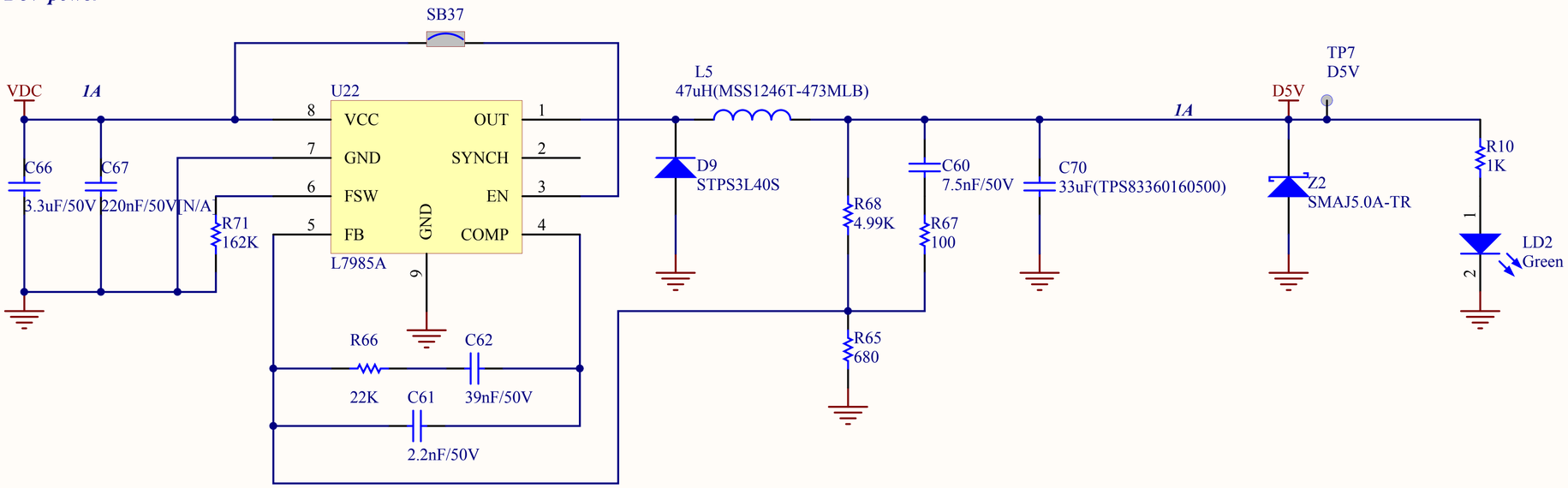

Title: **POWER**		
Project: **STM32G081B-EVAL USB-C daughter board**		
Variant: Variant name is not interpreted until output		
Revision: C-02		Reference: MB1352
Size: A4	Date: 3-Aug-18	Sheet: 9 of 10

life.augmented

Source Power

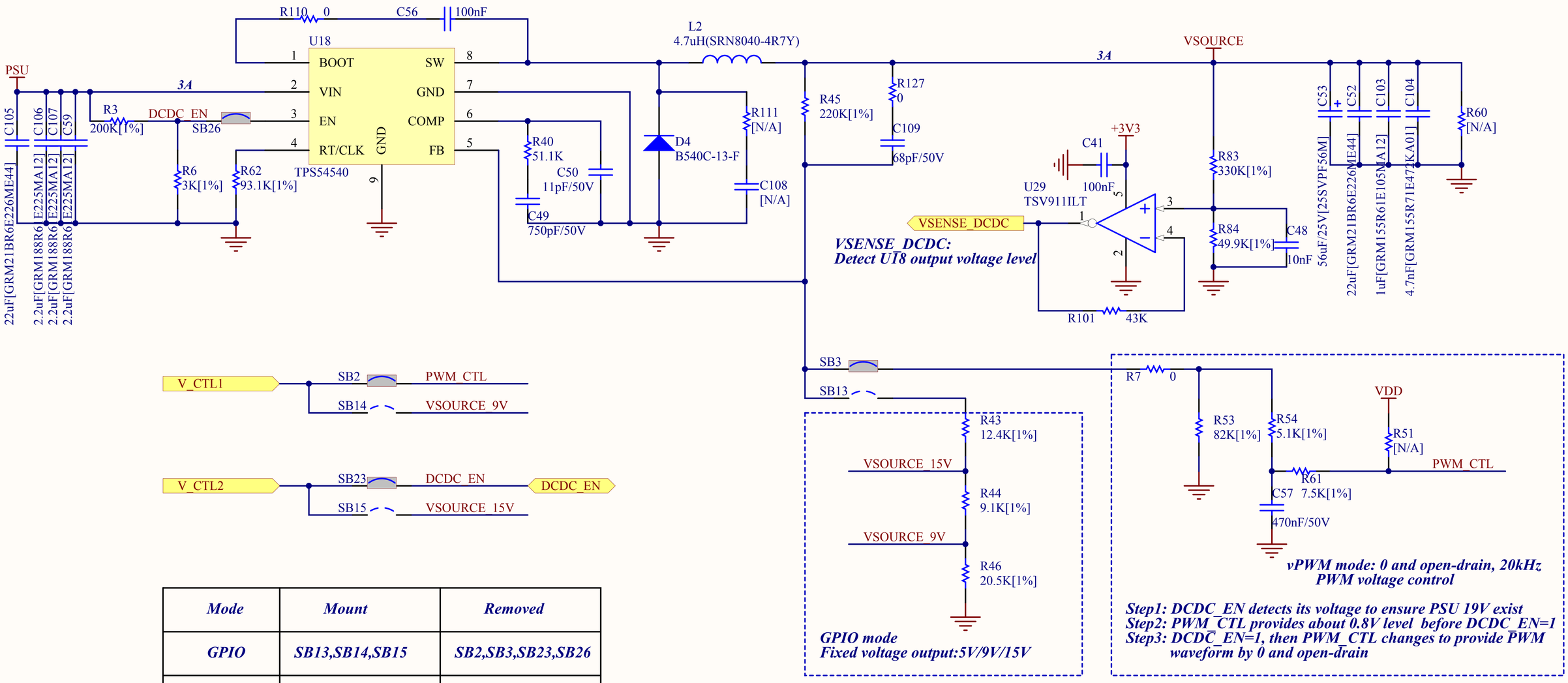

Mode	Mount	Removed
GPIO	SB13,SB14,SB15	SB2,SB3,SB23,SB26
PWM(Default)	SB2,SB3,SB23,SB26	SB13,SB14,SB15

Title: **SOURCE POWER**		
Project: **STM32G081B-EVAL USB-C daughter board**		
Variant: Variant name is not interpreted until output		
Revision: C-02		Reference: MB1352
Size: A4	Date: 3-Aug-18	Sheet: 10 of 10

life.augmented