STM32G081B-EVAL Mother board

MB1350

Table of contents

Sheet 1: Project overview (this page)

Sheet 2: MB1350_TOP

Sheet 3: MCU

Sheet 4: Power

Sheet 5: Audio

Sheet 6: LCD_MicroSD

Sheet 7: Motor Control

Sheet 8: Peripherals

Sheet 9: RS232_RS485

Sheet 10: Extension connectors

Sheet 11: ST_LINK_V2-1

Sheet 12: SWD

Legend

General comment such as function title, configuration, ...

Text to be added to silkscreen.

Warning text.

Notes to generate the board layout.

Open Platform License Agreement

The Open Platform License Agreement (“Agreement”) is a binding legal contract between you ("You") and STMicroelectronics International N.V. (“ST”), a company incorporated under the laws of the Netherlands acting for the purpose of this Agreement through its Swiss branch 39, Chemin du Champ des Filles, 1228 Plan-les-Ouates, Geneva, Switzerland.

By using the enclosed reference designs, schematics, PC board layouts, and documentation, in hardcopy or CAD tool file format (collectively, the “Reference Material”), You are agreeing to be bound by the terms and conditions of this Agreement. Do not use the Reference Material until You have read and agreed to this Agreement terms and conditions. The use of the Reference Material automatically implies the acceptance of the Agreement terms and conditions.

The complete Open Platform License Agreement can be found on www.st.com/opla.

U_MB1350_TOP
MB1350_TOP.SchDoc

Title: **Project overview**			
Project: **STM32G081B-EVAL Mother board**			
Variant: [No Variations]			
Revision: B-01		Reference: MB1350	
Size: A4	Date: 31-AUG-17	Sheet: 1 of 12	

life.augmented

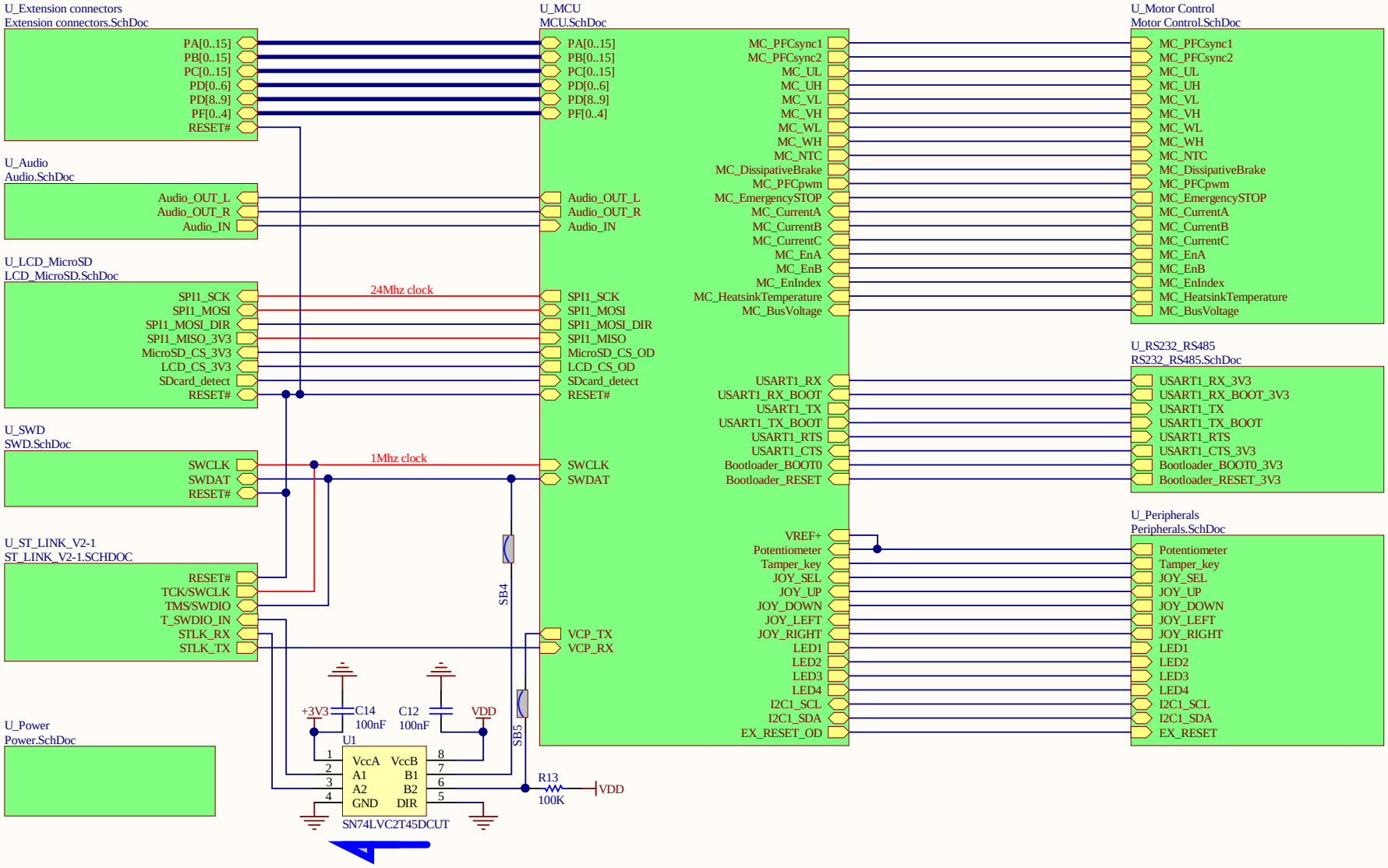

Title: **MB1350_TOP**		
Project: **STM32G081B-EVAL Mother board**		
Variant: [No Variations]		
Revision: B-01		Reference: MB1350
Size: A4	Date: 31-AUG-17	Sheet: 2 of 12

life.augmented

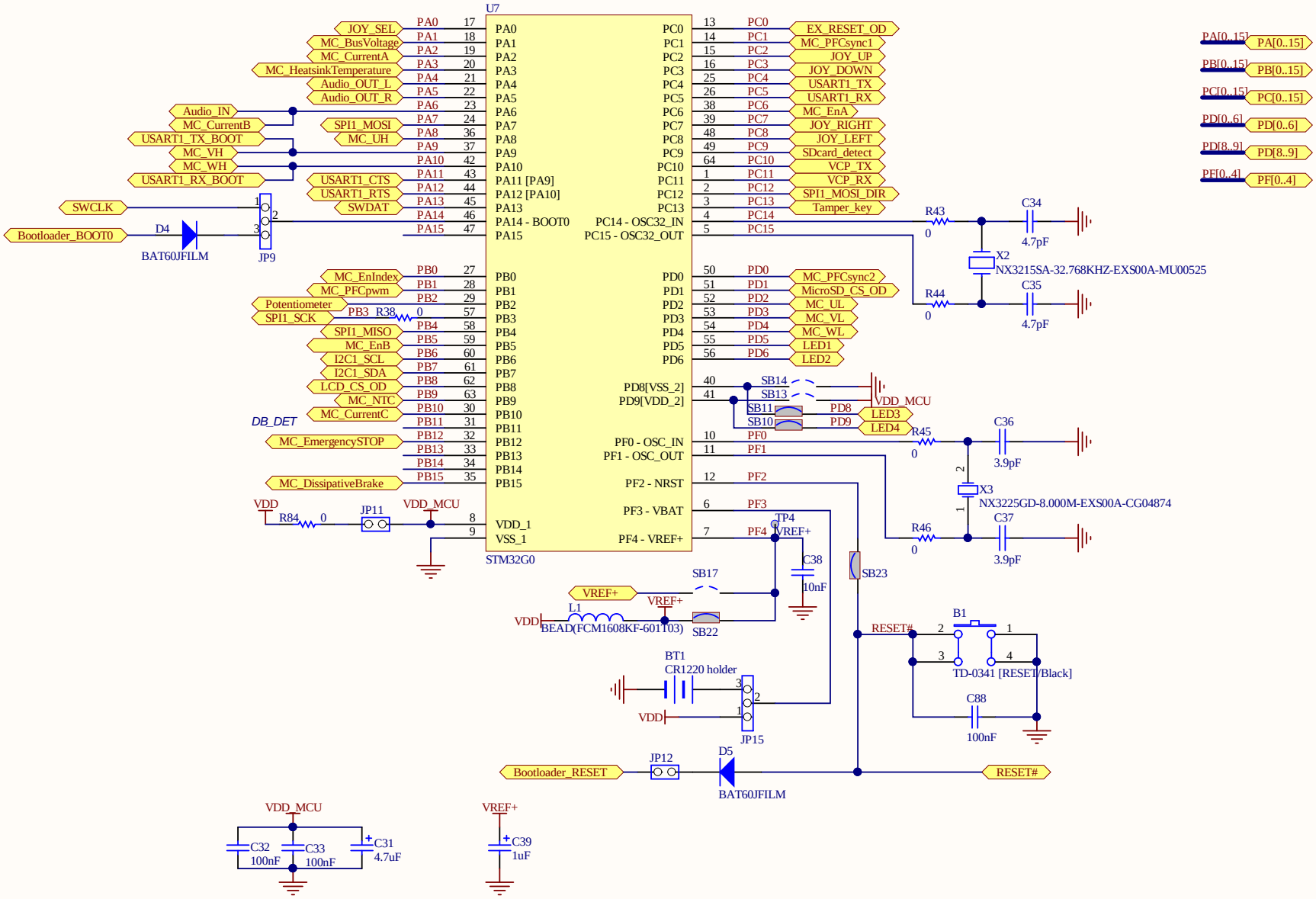

Title: **MCU**			life.augmented
Project: **STM32G081B-EVAL Mother board**			
Variant: [No Variations]			
Revision: B-01		Reference: MB1350	
Size: A4	Date: 31-AUG-17	Sheet: 3 of 12	

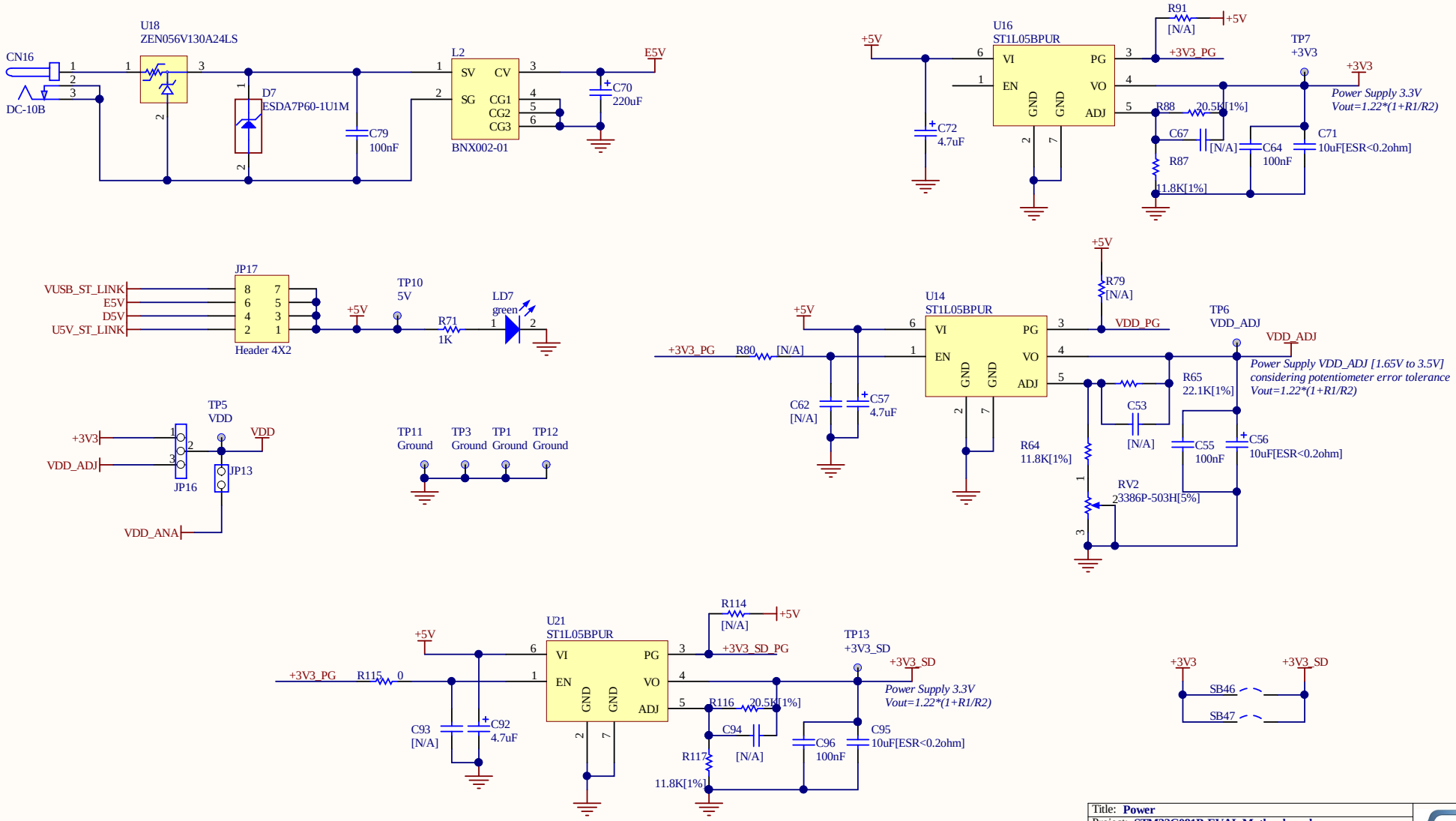

Title: **Power**		
Project: **STM32G081B-EVAL Mother board**		
Variant: [No Variations]		
Revision: B-01		Reference: MB1350
Size: A4	Date: 31-AUG-17	Sheet: 4 of 12

life.augmented

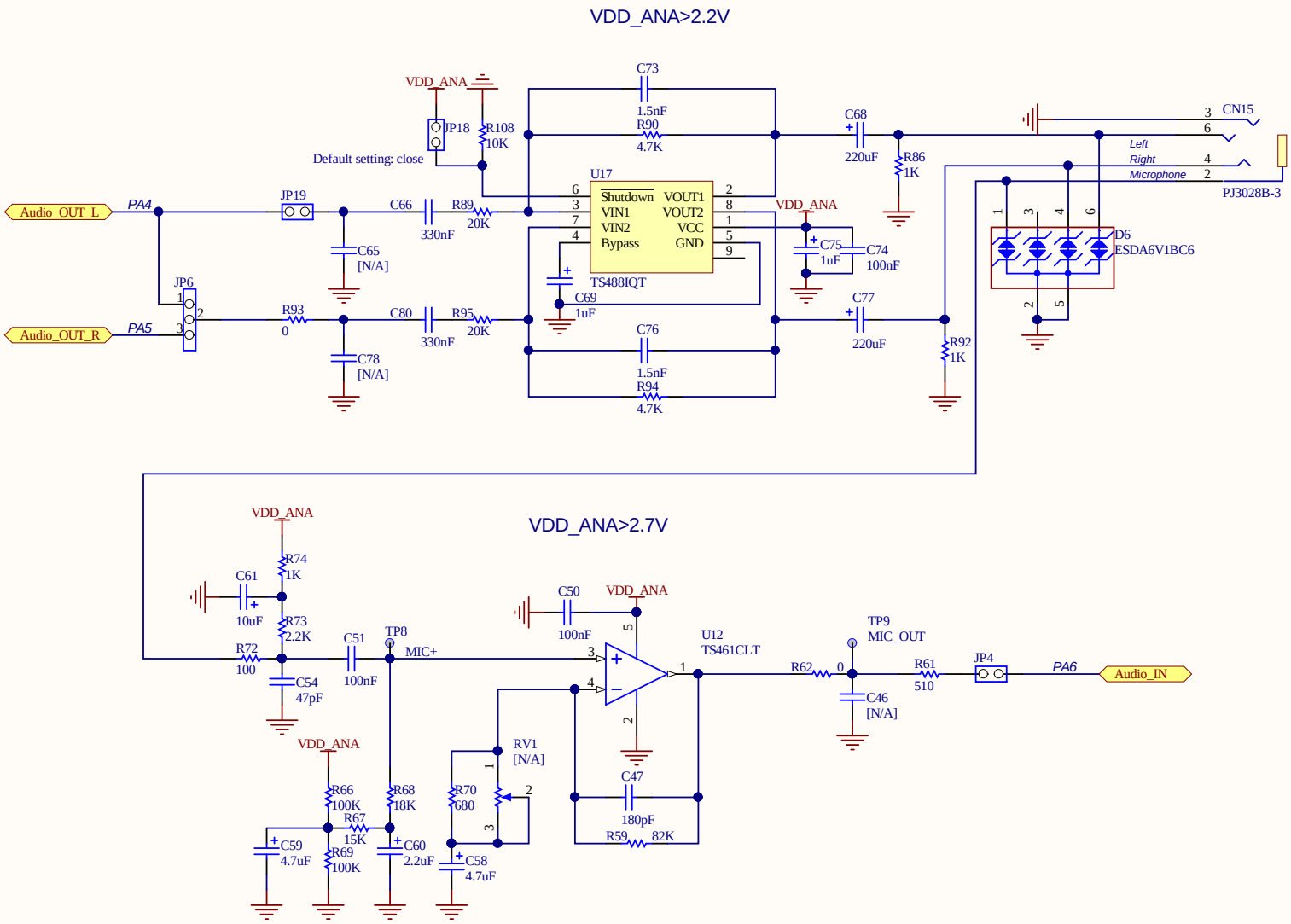

Title: **Audio**			
Project: **STM32G081B-EVAL Mother board**			
Variant: [No Variations]			
Revision: B-01		Reference: MB1350	
Size: A4	Date: 31-AUG-17	Sheet: 5 of 12	

life.augmented

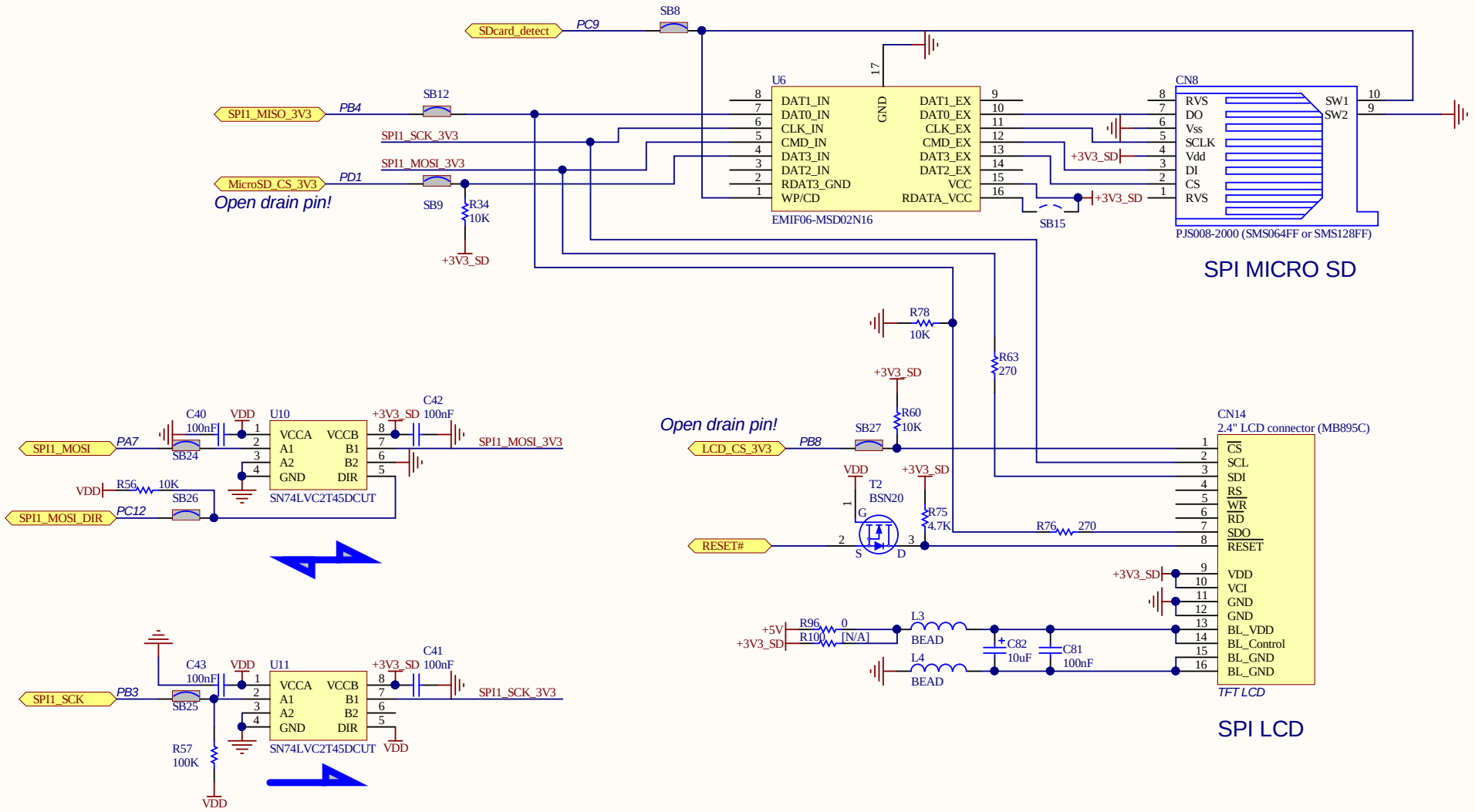

Title: **LCD_MicroSD**		
Project: **STM32G081B-EVAL Mother board**		
Variant: [No Variations]		
Revision: B-01		Reference: MB1350
Size: A4	Date: 31-AUG-17	Sheet: 6 of 12

life.augmented

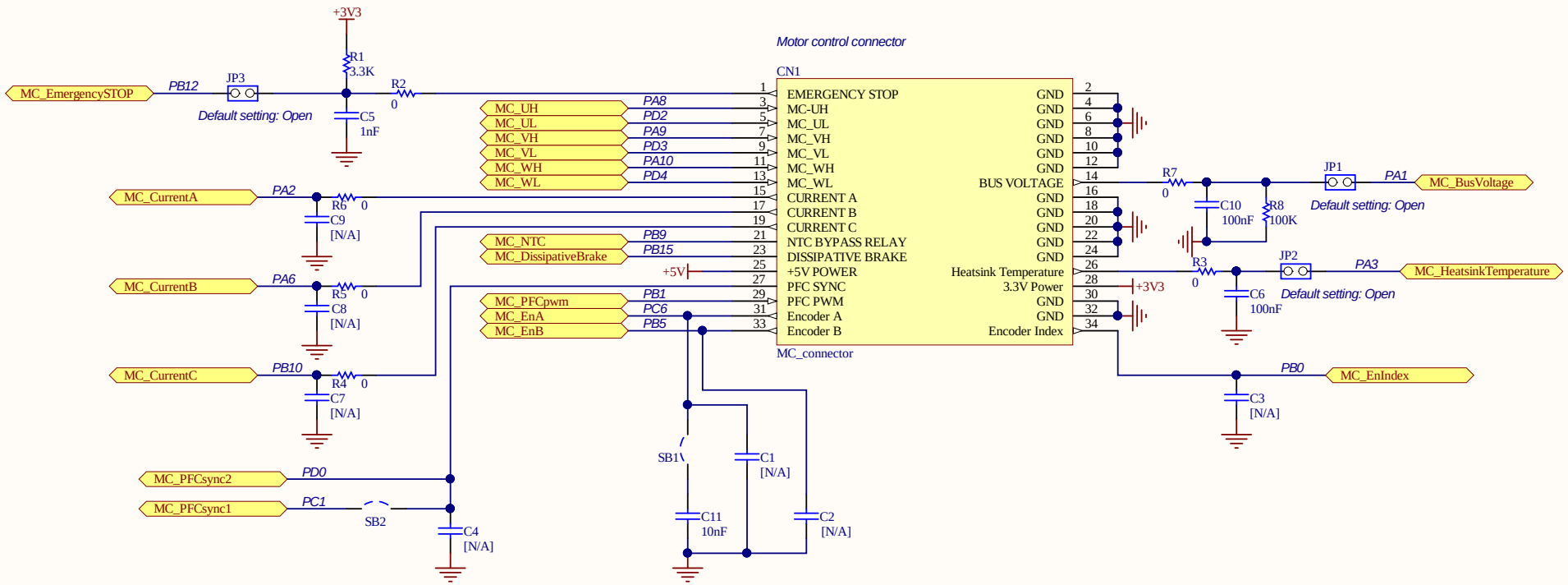

Title: **Motor Control**		
Project: **STM32G081B-EVAL Mother board**		
Variant: [No Variations]		
Revision: B-01		Reference: MB1350
Size: A4	Date: 31-AUG-17	Sheet: 7 of 12

life.augmented

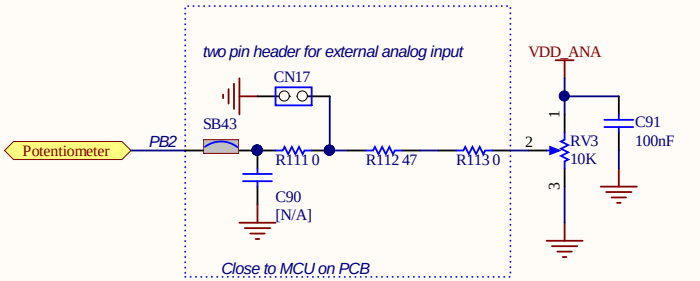

Potentiometer

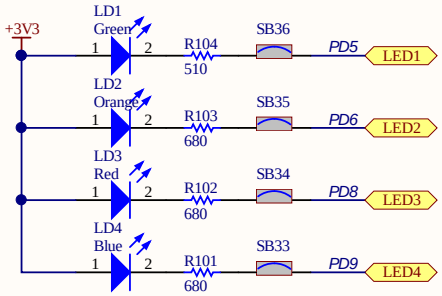

LEDs

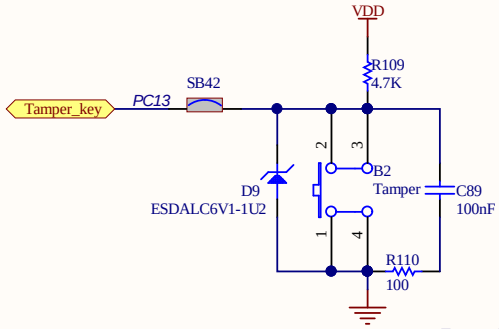

Tamper Button

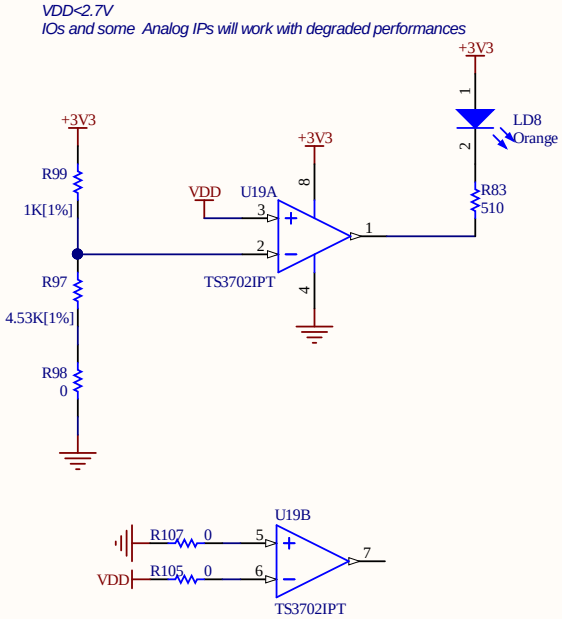

Low Voltage LED

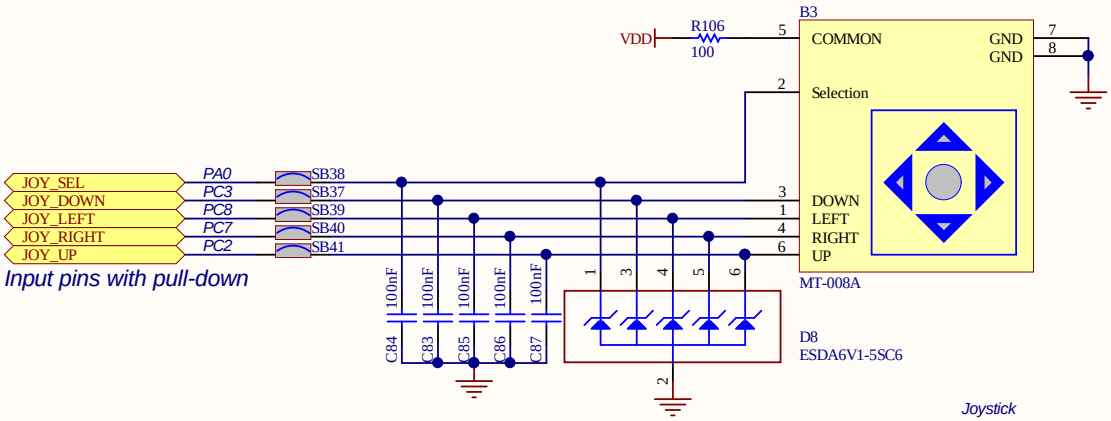

Input pins with pull-down

Joystick

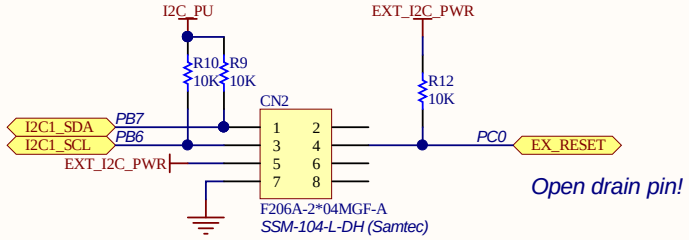

Open drain pin!

I2C extension connector

Title: **Peripherals**		
Project: **STM32G081B-EVAL Mother board**		
Variant: [No Variations]		
Revision: B-01		Reference: MB1350
Size: A4	Date: 31-AUG-17	Sheet: 8 of 12

life.augmented

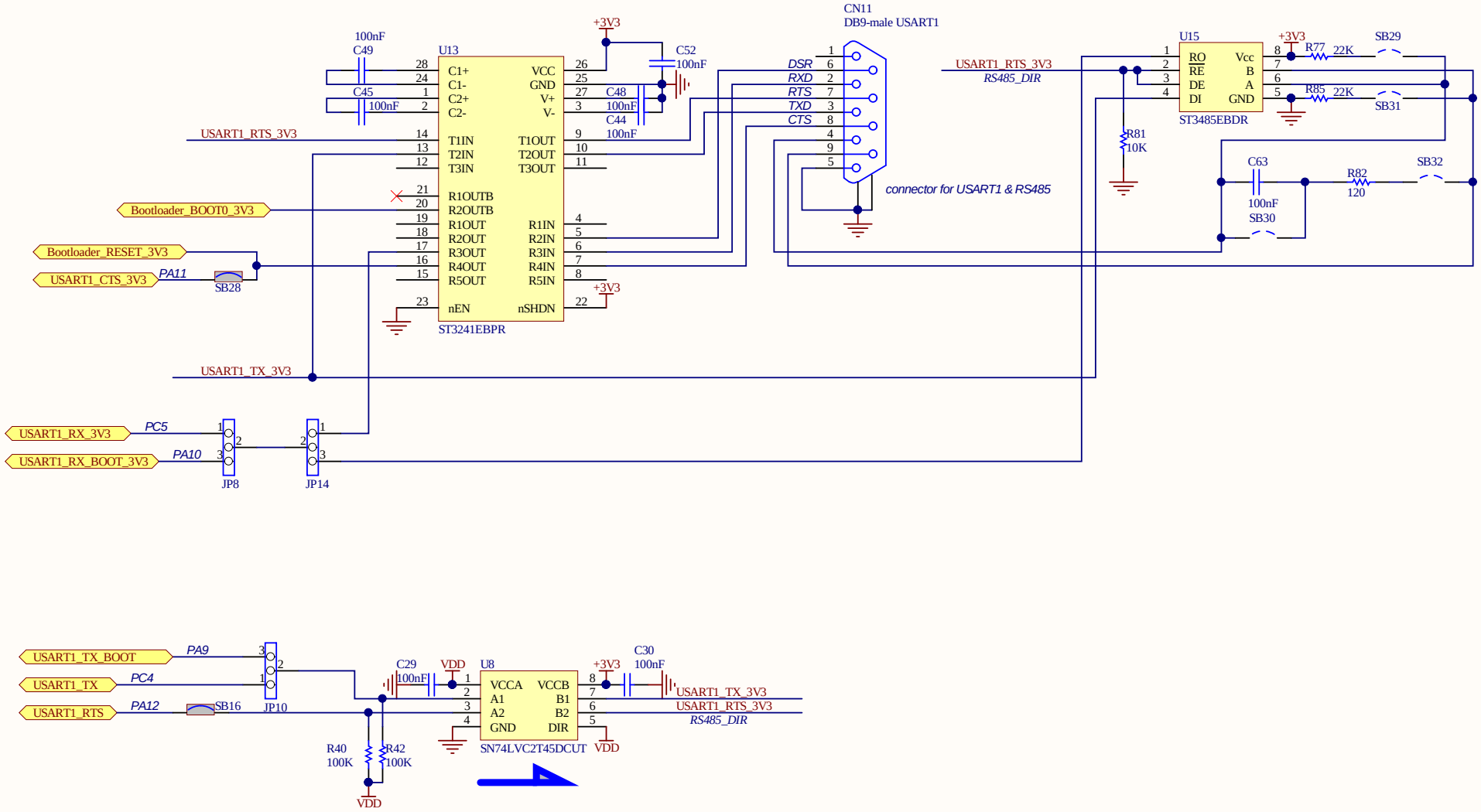

Title: **RS232_RS485**			
Project: **STM32G081B-EVAL Mother board**			
Variant: [No Variations]			
Revision: B-01		Reference: MB1350	
Size: A4	Date: 31-AUG-17	Sheet: 9 of 12	

life.augmented

Daugher board connectors

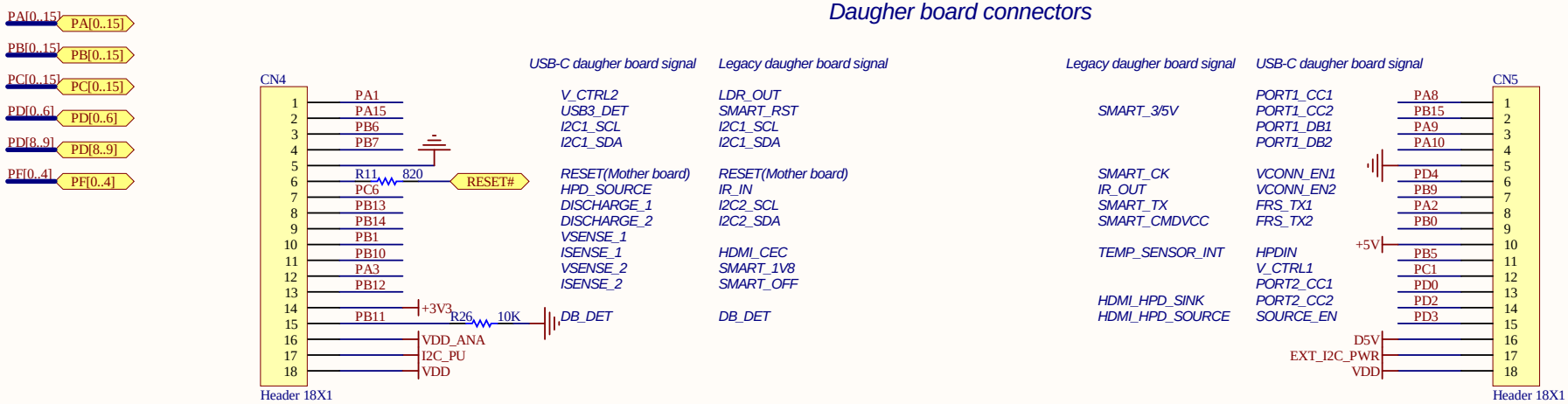

Note: If no daugher board on CN4 & CN5, close pin17 &18 of CN4 & CN5 by jumpers when using I2C extension connector CN2

Extension connectors

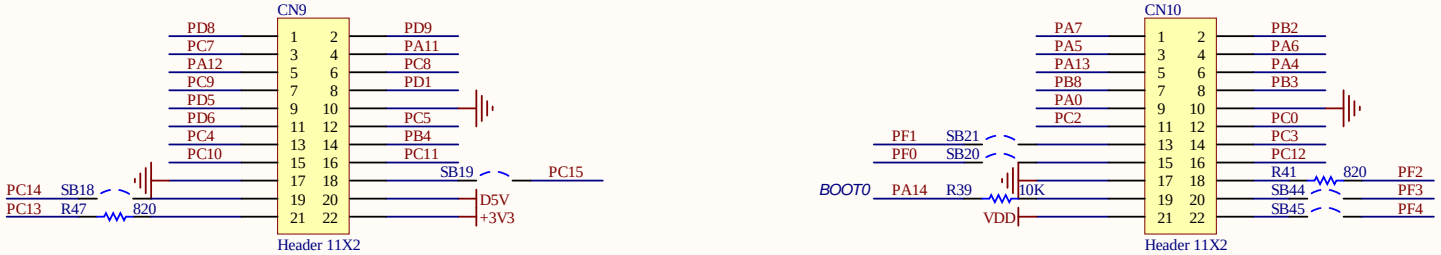

Title: **Extension connectors**		
Project: **STM32G081B-EVAL Mother board**		
Variant: [No Variations]		
Revision: B-01		Reference: MB1350
Size: A4	Date: 31-AUG-17	Sheet: 10 of 12

life.augmented

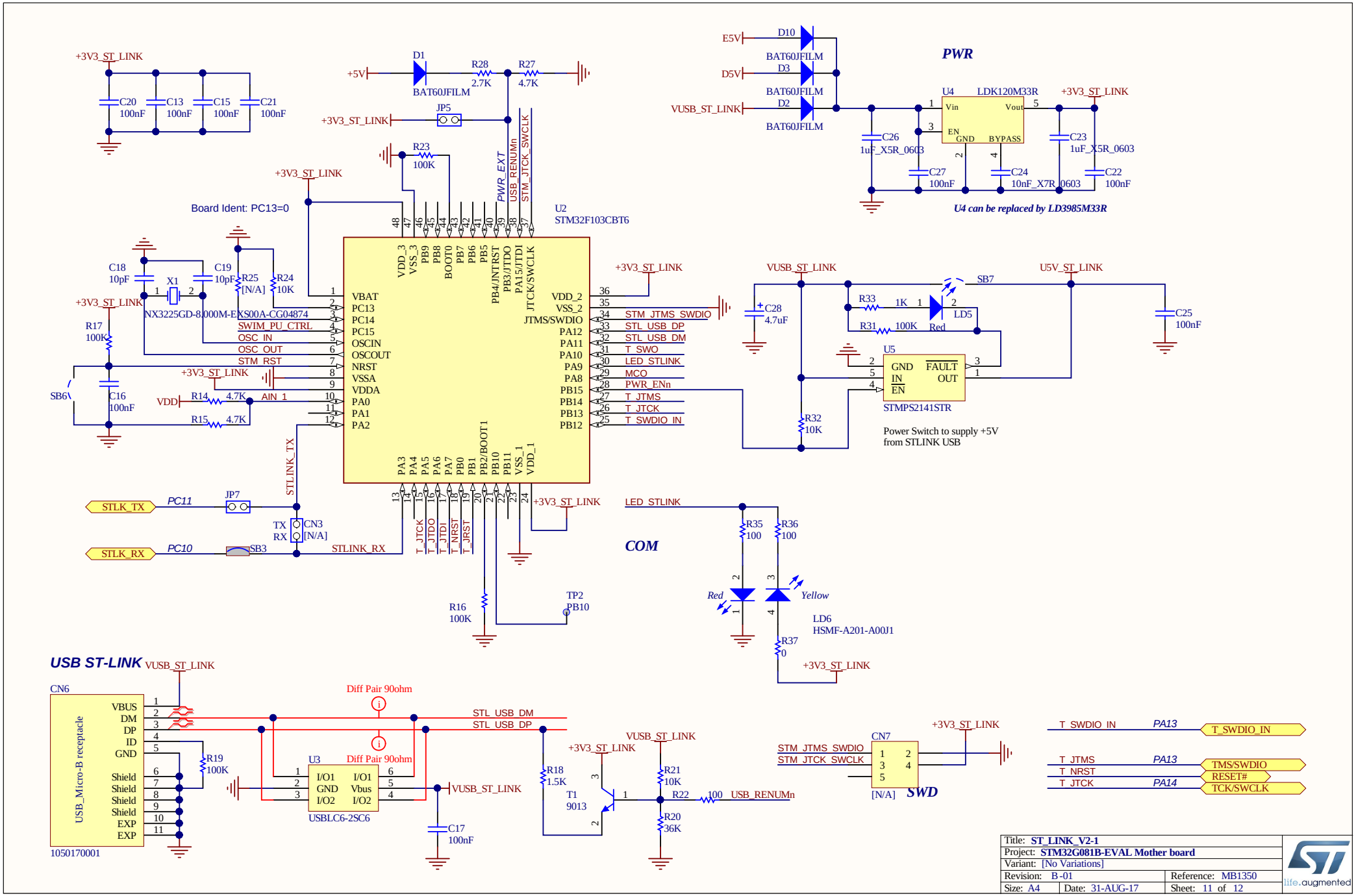
PWR
U4 can be replaced by LD3985M33R
U4 LDK120M33R
Vin Vout EN GND BYPASS
U2 STM32F103CBT6
Board Ident: PC13=0
VBAT PC13 PC14 PC15 OSCIN OSCOUT NRST VSSA VDDA PA0 PA1 PA2
VDD_2 VSS_2 JTMS/SWDIO PA12 PA11 PA10 PA9 PA8 PB15 PB14 PB13 PB12
VDD_3 VSS_3 PB9 PB8 BOOT0 PB7 PB6 PB5 PB4/JNTRST PB3/JTDO PA15/JTDI JTCK/SWCLK
PA3 PA4 PA5 PA6 PA7 PB0 PB1 PB2/BOOT1 PB10 PB11 VSS_1 VDD_1
STM_JTMS_SWDIO STL_USB_DP STL_USB_DM T_SWO LED_STLINK MCO PWR_ENn T_JTMS T_JTCK T_SWDIO_IN
SWIM_PU_CTRL OSC_IN OSC_OUT STM_RST AIN_1 STLINK_TX STLINK_RX
PWR_EXT USB_RENUMn STM_JTCK_SWCLK
NX3225GD-8.000M-EXS00A-CG04874
STMPS2141STR
Power Switch to supply +5V from STLINK USB
COM
LD6 HSMF-A201-A00J1
USB ST-LINK
CN6 USB_Micro-B receptacle
VBUS DM DP ID GND Shield Shield Shield Shield EXP EXP
1050170001
Diff Pair 90ohm
U3 USBLC6-2SC6
I/O1 GND I/O2 I/O1 Vbus I/O2
STL_USB_DM STL_USB_DP
VUSB_ST_LINK
T1 9013
R22 100 USB_RENUMn
CN7 [N/A] SWD
STM_JTMS_SWDIO STM_JTCK_SWCLK
T_SWDIO_IN PA13 T_SWDIO_IN
T_JTMS PA13 TMS/SWDIO
T_NRST RESET#
T_JTCK PA14 TCK/SWCLK
Title: ST_LINK_V2-1
Project: STM32G081B-EVAL Mother board
Variant: [No Variations]
Revision: B-01
Reference: MB1350
Size: A4
Date: 31-AUG-17
Sheet: 11 of 12
life.augmented

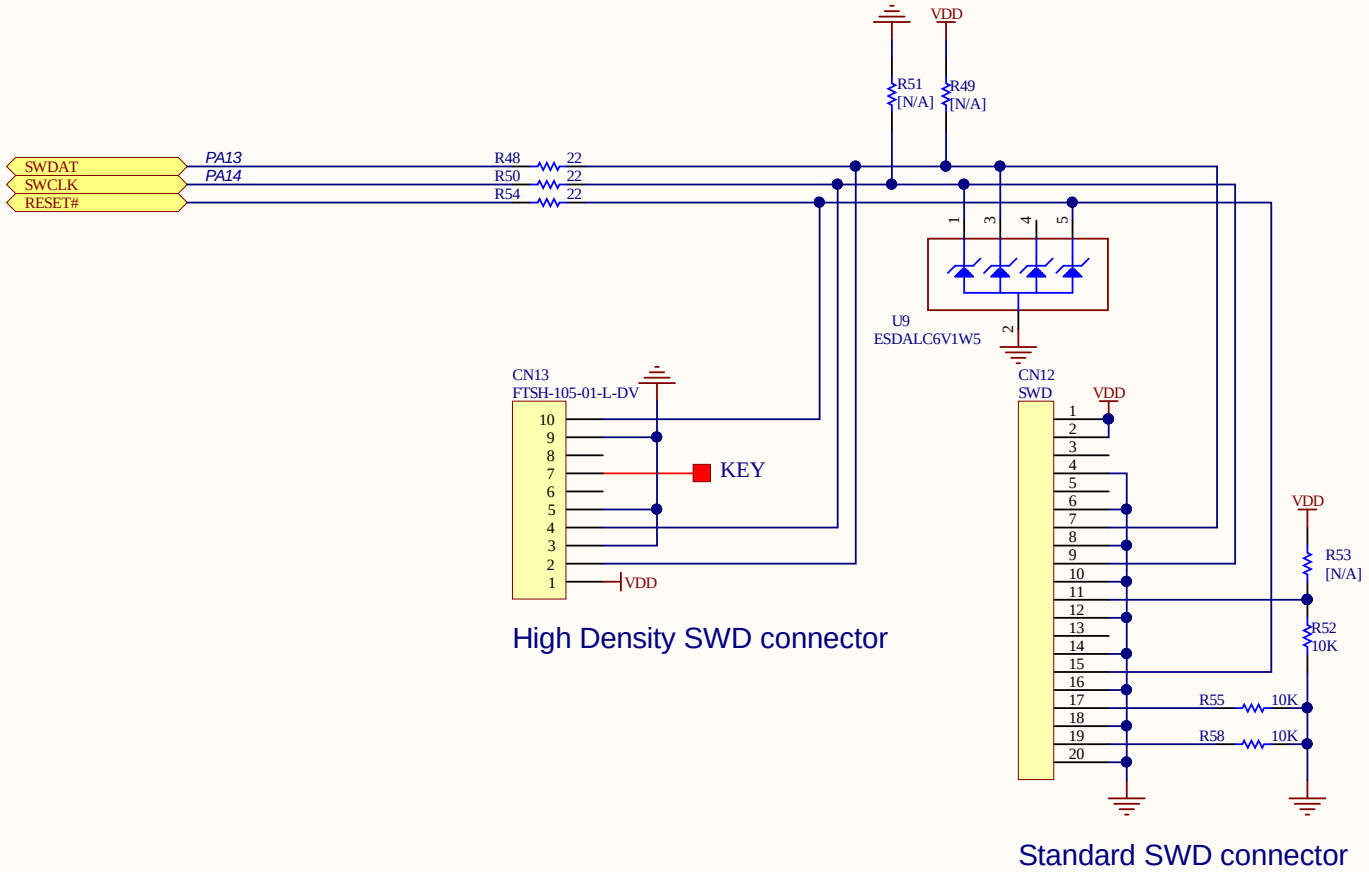

Title: **SWD**		
Project: **STM32G081B-EVAL Mother board**		
Variant: [No Variations]		
Revision: B-01		Reference: MB1350
Size: A4	Date: 31-AUG-17	Sheet: 12 of 12

life.augmented