NUCLEO64 ext-SMPS

MB1319

Table of contents

Sheet 1: Project overview (this page)

Sheet 2: MB1319_Top

Sheet 3: STM32 microcontroller I/Os

Sheet 4: STM32 microcontroller power

Sheet 5: Arduino extension connectors

Sheet 6: Power

Sheet 7: Power SMPS

Sheet 8: ST-Link/V2-1

U_mb1319_Top
mb1319_Top.SchDoc

Legend

General comment such as function title, configuration, ...

Text to be added to silkscreen.

Warning text.

Notes to generate the board layout.

OPEN PLATFORM LICENSE AGREEMENT

The Open Platform License Agreement (“Agreement”) is a binding legal contract between you ("You") and STMicroelectronics International N.V. (“ST”), a company incorporated under the laws of the Netherlands acting for the purpose of this Agreement through its Swiss branch 39, Chemin du Champ des Filles, 1228 Plan-les-Ouates, Geneva, Switzerland.

By using the enclosed reference designs, schematics, PC board layouts, and documentation, in hardcopy or CAD tool file format (collectively, the “Reference Material”), You are agreeing to be bound by the terms and conditions of this Agreement. Do not use the Reference Material until You have read and agreed to this Agreement terms and conditions. The use of the Reference Material automatically implies the acceptance of the Agreement terms and conditions.

The complete Open Platform License Agreement can be found on www.st.com/opla.

Title: **Project overview**		
Project: **NUCLEO64 ext-SMPS**		
Variant: L433RC_P		
Revision: C-02		Reference: MB1319
Size: A4	Date: 10-MAY-2022	Sheet: 1 of 8

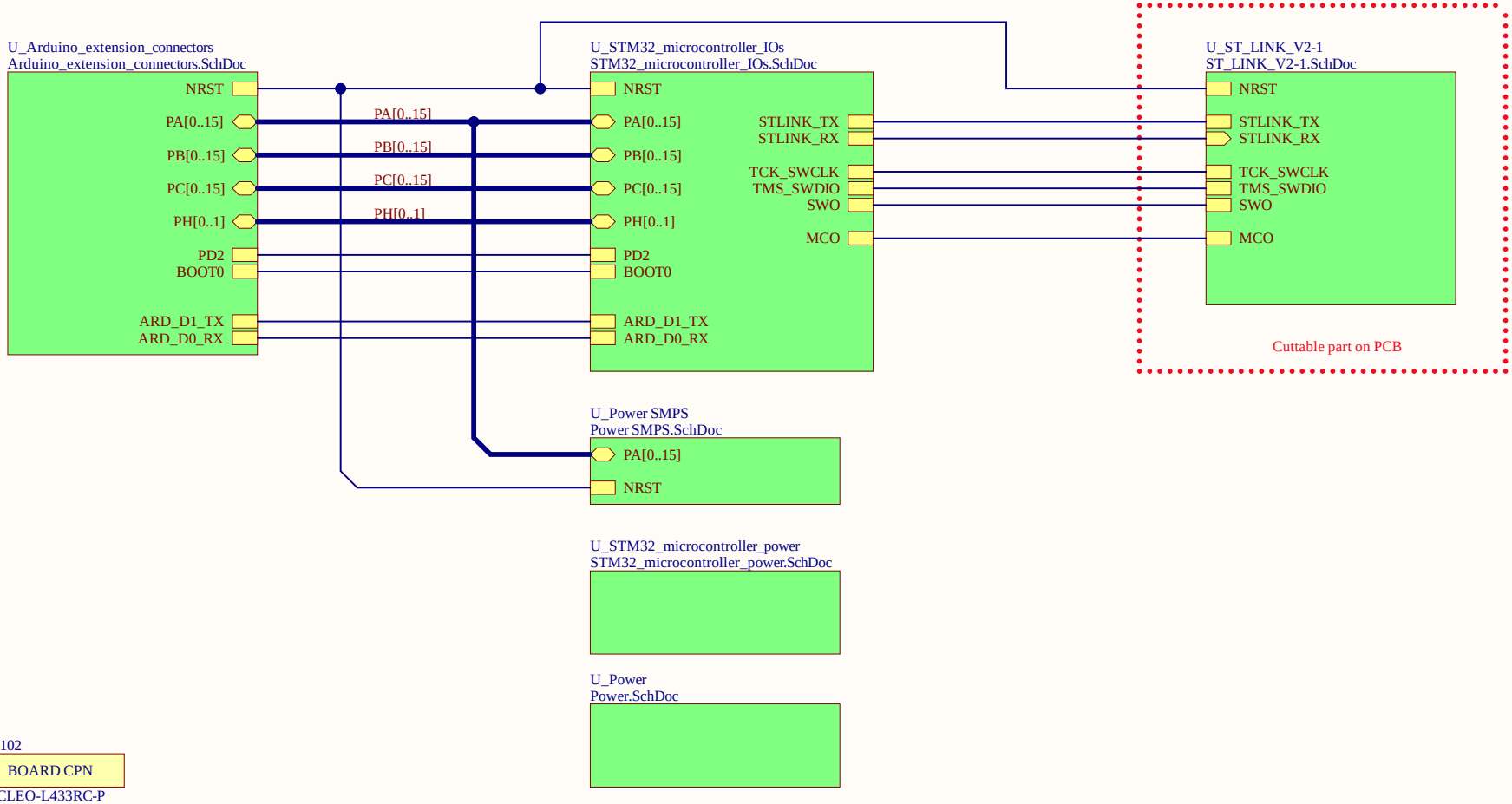

HW101

STICKER BOARD

Sticker board

HW102

BOARD CPN

NUCLEO-L433RC-P

HW104 HW105 HW106 HW107 HW108 HW109

LOGO NUCLEO LOGO ST LOGO CE LOGO ESD LOGO ROHS LOGO STM32

Title: **mb1319 Top: hierarchical view**		
Project: **NUCLEO64 ext-SMPS**		
Variant: L433RC_P		
Revision: C-02		Reference: MB1319
Size: A4	Date: 10-MAY-2022	Sheet: 2 of 8

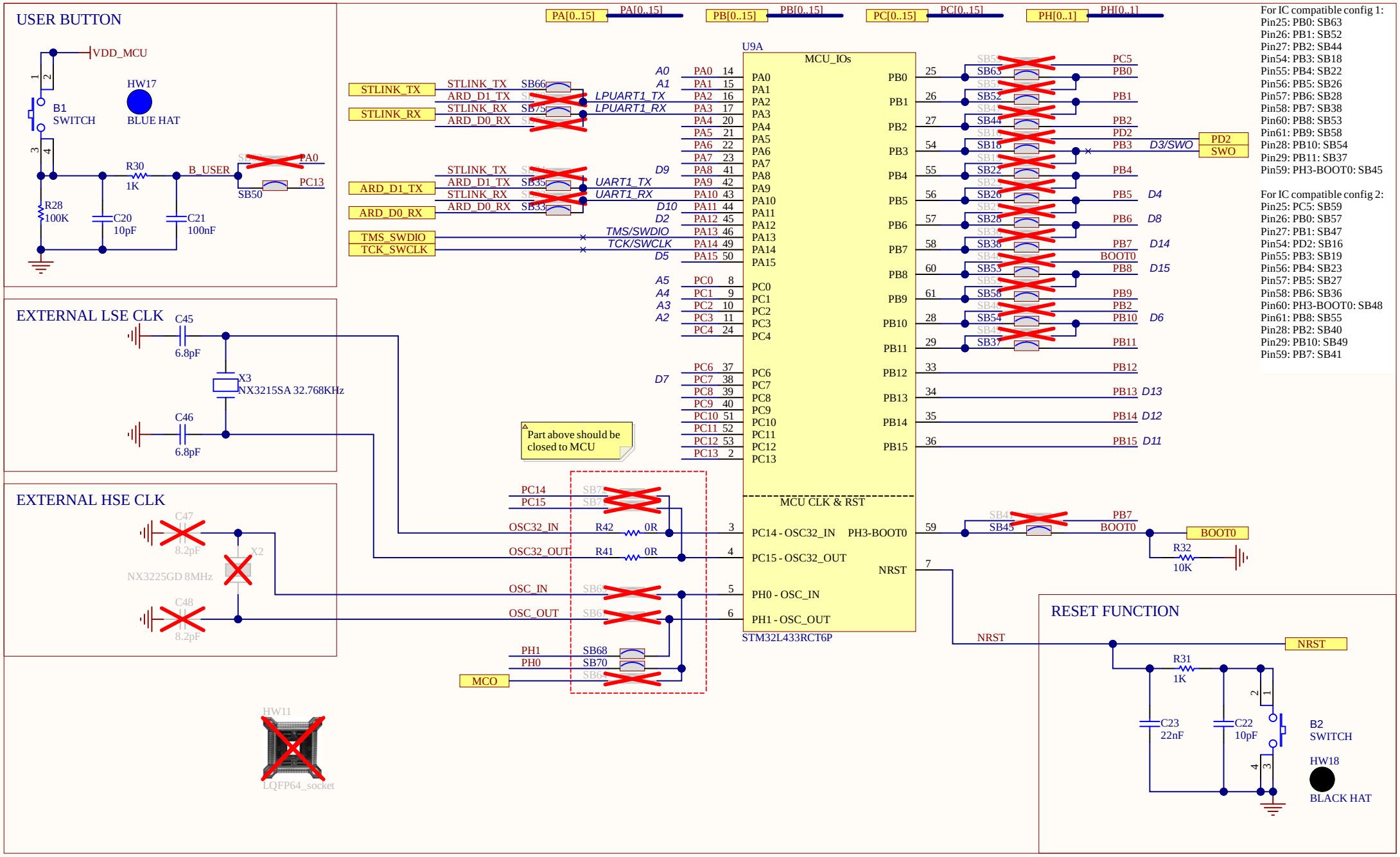

Title: **STM32 microcontroller I/Os**	
Project: **NUCLEO64 ext-SMPS**	
Variant: L433RC_P	
Revision: C-02	Reference: MB1319
Size: A4 Date: 10-MAY-2022	Sheet: 3 of 8

MCU PWR SUPPLIES

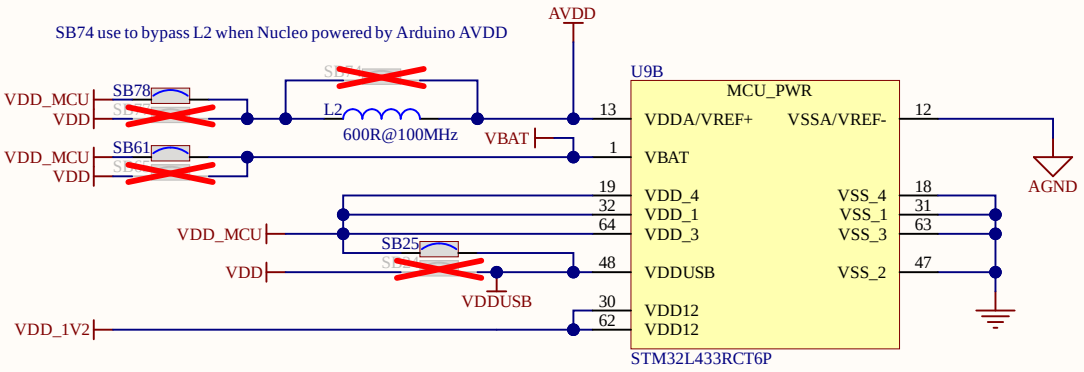

DECAPS

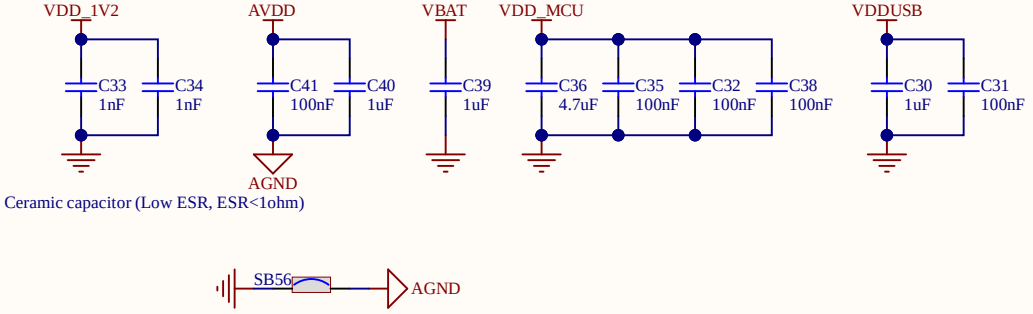

Title: **STM32 microcontroller Power**		
Project: **NUCLEO64 ext-SMPS**		
Variant: L433RC_P		
Revision: C-02		Reference: MB1319
Size: A4	Date: 10-MAY-2022	Sheet: 4 of 8

IOREF SELECTION	SB21	SB15	SB14
IOREF= 3V3	Closed	Open	Open
IOREF = 3V3_PER	Open	Closed	Open
IOREF = VDD_MCU Mainly for 1V8 compatibility	Open	Open	Closed

Default

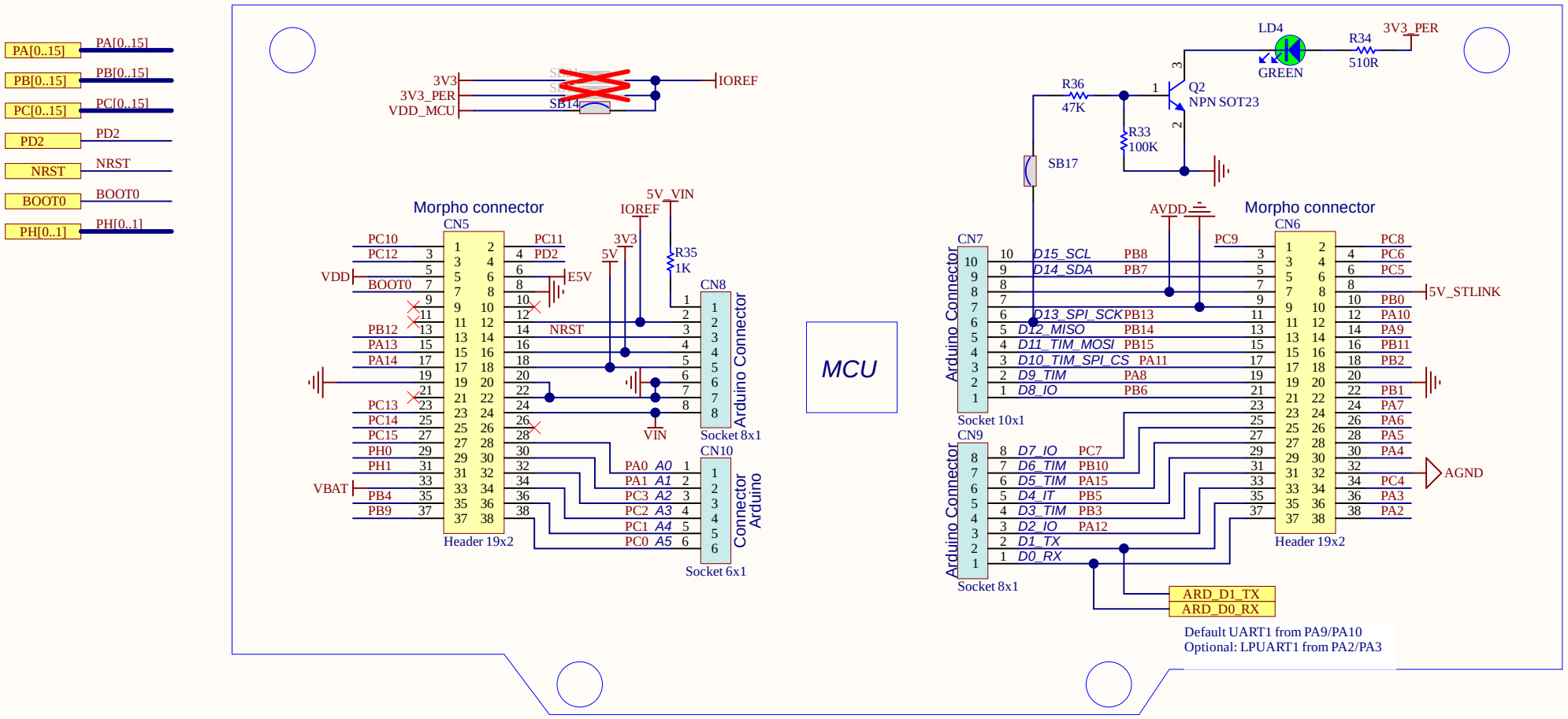

Title: **Arduino extension connectors**		
Project: **NUCLEO64 ext-SMPS**		
Variant: L433RC_P		
Revision: C-02		Reference: MB1319
Size: A4	Date: 10-MAY-2022	Sheet: 5 of 8

VIN / 5V PWR

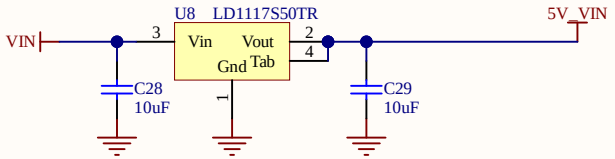

5V PWR SELECTION

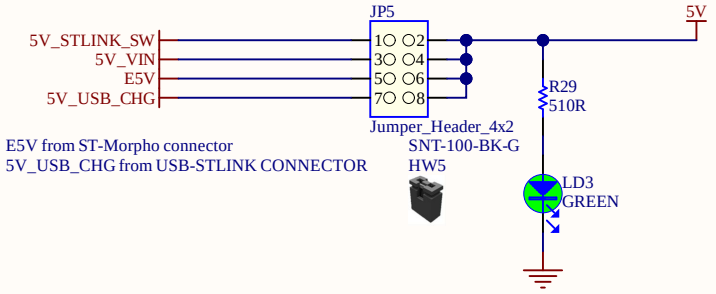

3V3 PWR

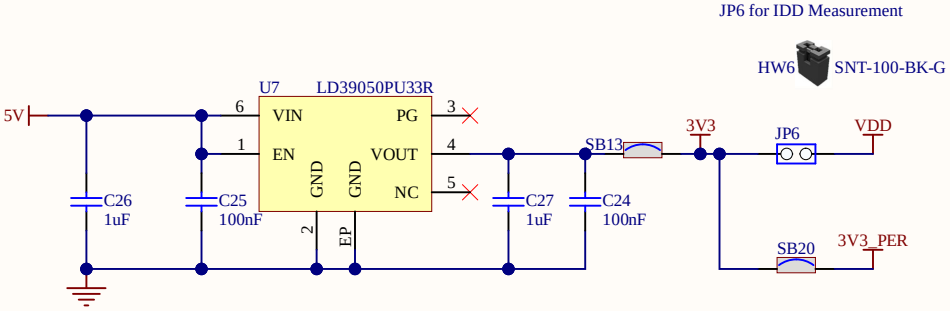

Title: **MAIN POWER 5V / 3V3**		
Project: **NUCLEO64 ext-SMPS**		
Variant: L433RC_P		
Revision: C-02		Reference: MB1319
Size: A4	Date: 10-MAY-2022	Sheet: 6 of 8

VDD_MCU_SELECTION

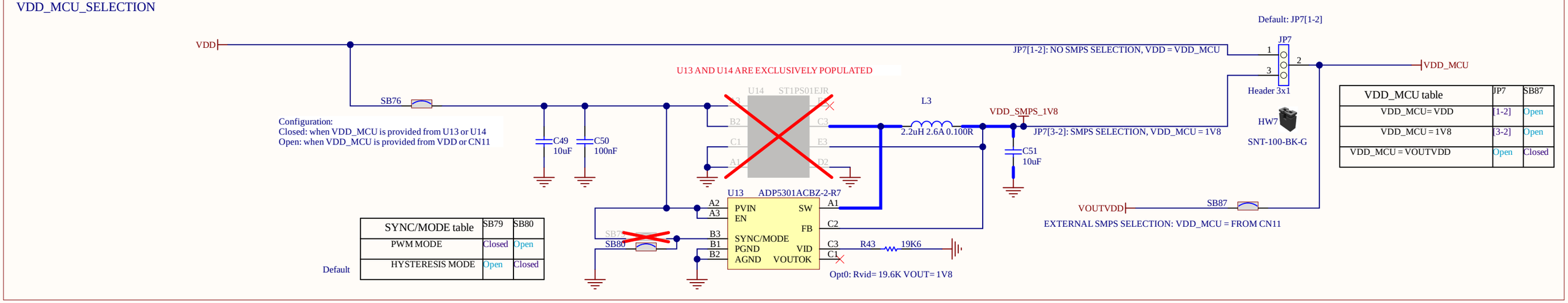

SYNC/MODE table	SB79	SB80
PWM MODE	Closed	Open
HYSTERESIS MODE	Open	Closed

Default

VDD_MCU table	JP7	SB87
VDD_MCU= VDD	[1-2]	Open
VDD_MCU = 1V8	[3-2]	Open
VDD_MCU = VOUTVDD	Open	Closed

SMPS SELECTION, VDD_1V2

Comment on this part are for Ext 1V2 SMPS configuration

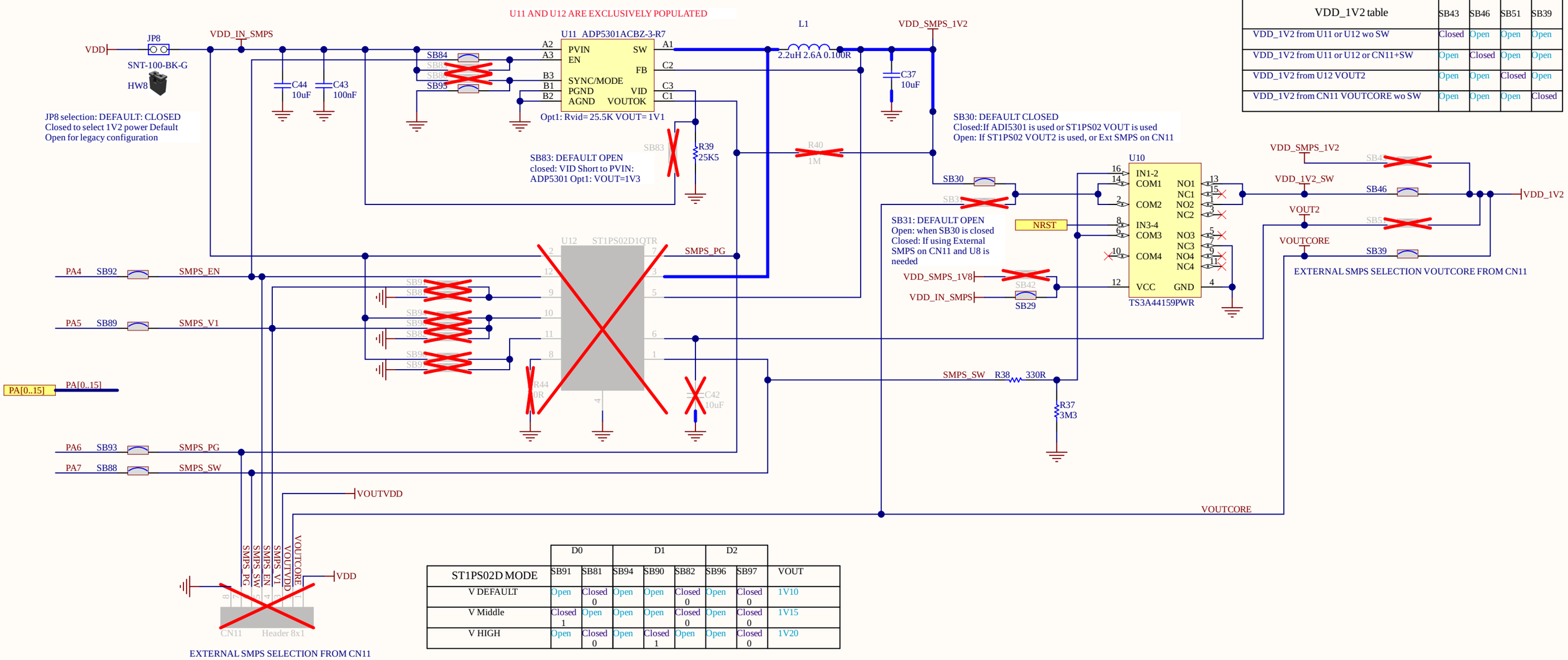

Default

VDD_1V2 table	SB43	SB46	SB51	SB39
VDD_1V2 from U11 or U12 wo SW	Closed	Open	Open	Open
VDD_1V2 from U11 or U12 or CN11+SW	Open	Closed	Open	Open
VDD_1V2 from U12 VOUT2	Open	Open	Closed	Open
VDD_1V2 from CN11 VOUTCORE wo SW	Open	Open	Open	Closed

ST1PS02D MODE	D0		D1			D2		VOUT
	SB91	SB81	SB94	SB90	SB82	SB96	SB97	
V DEFAULT	Open	Closed 0	Open	Open	Closed 0	Open	Closed 0	1V10
V Middle	Closed 1	Open	Open	Open	Closed 0	Open	Closed 0	1V15
V HIGH	Open	Closed 0	Open	Closed 1	Open	Open	Closed 0	1V20

Title: **STM32 Power SMPS**		
Project: **NUCLEO64 ext-SMPS**		
Variant: L433RC_P		
Revision: C-02		Reference: MB1319
Size: A3	Date: 10-MAY-2022	Sheet: 7 of 8

STLINK_MCU

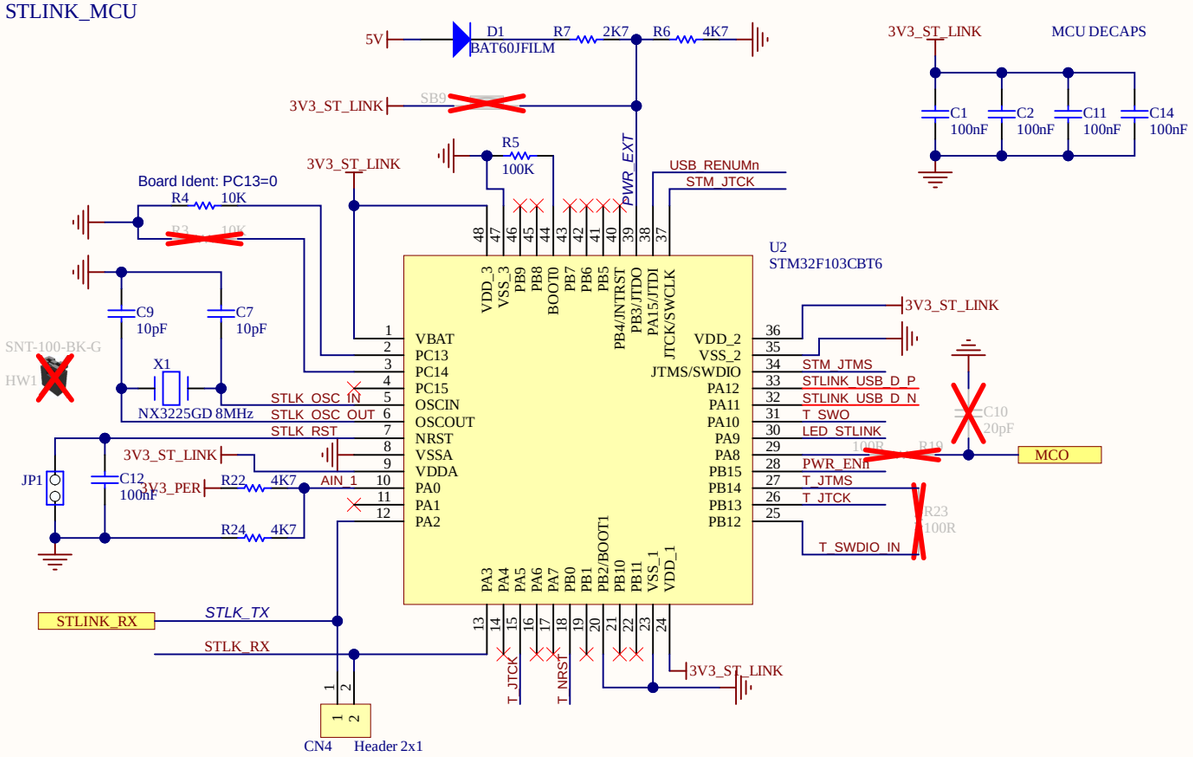

SWD INTERFACE

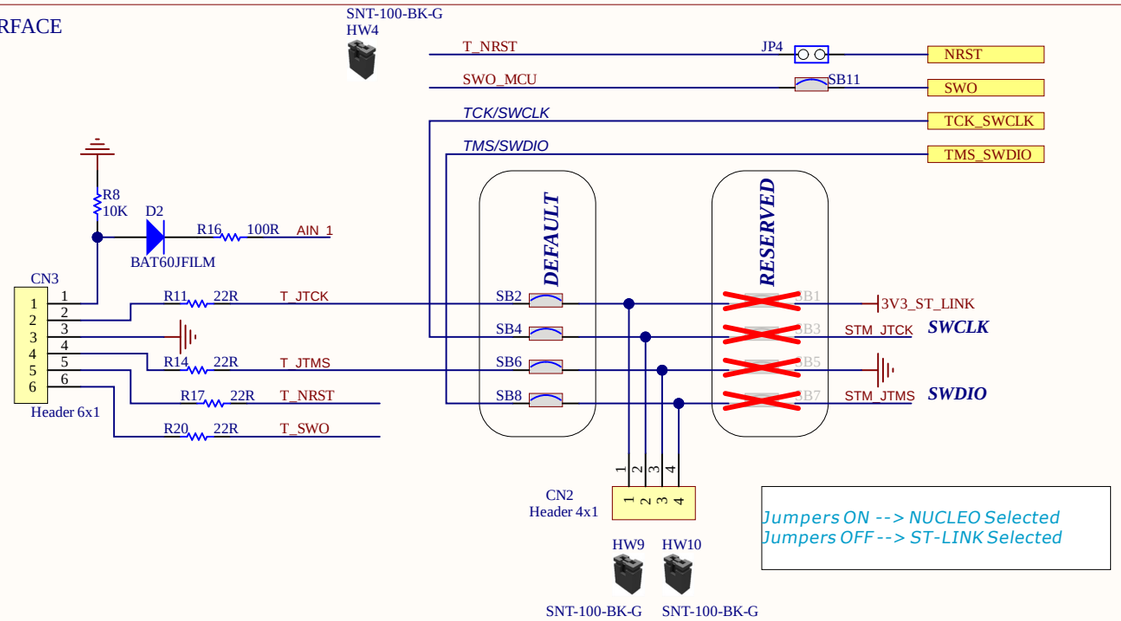

UART_TX LEVEL SHIFTER for MCU_1V8

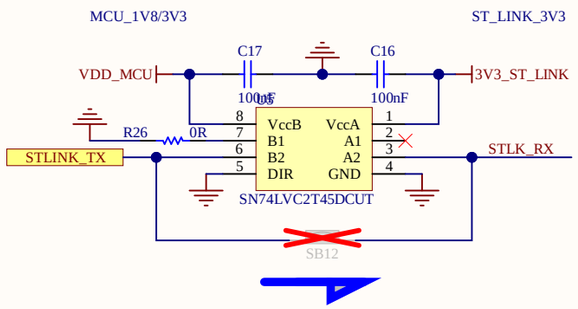

SW LEVEL SHIFTER FOR MCU_1V8

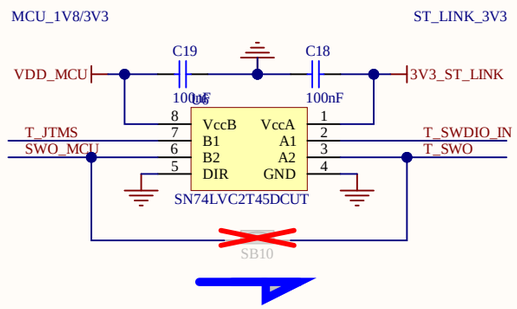

STLINK_LED: COM

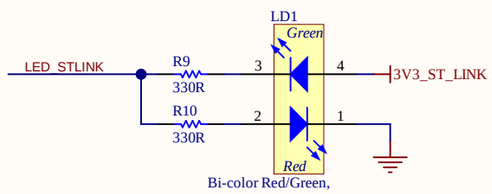

ST-LINK USB CONNECTOR

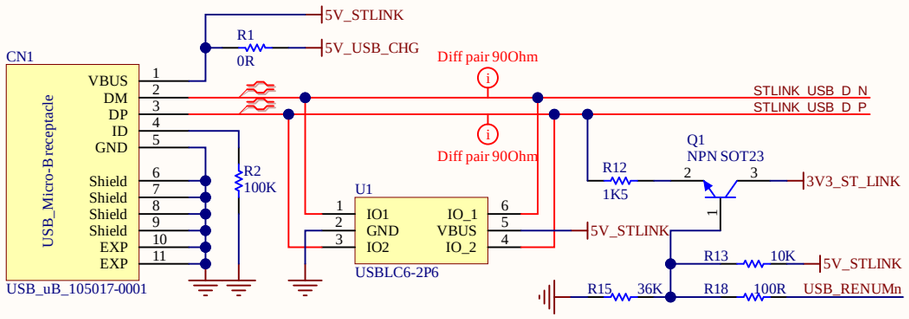

ST-LINK POWER 3V3 / 150mA

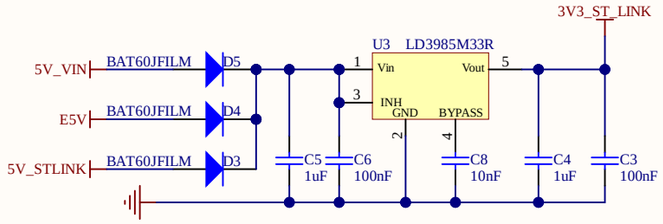

GND

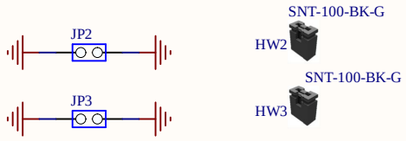

USB 5V POWER SWITCH: 5V / 500mA

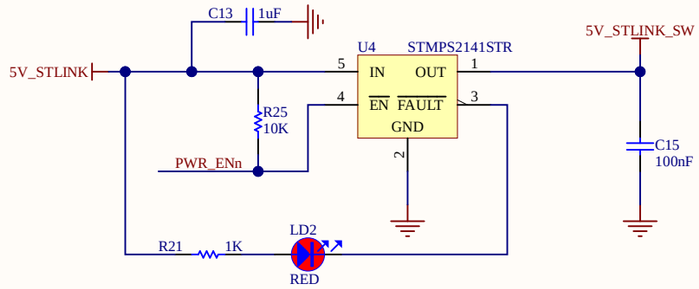

All the sheet are the CUTTABLE part on PCB

Title: **ST-LINK/V2-1**		
Project: **NUCLEO64 ext-SMPS**		
Variant: L433RC_P		
Revision: C-02		Reference: MB1319
Size: A3	Date: 10-MAY-2022	Sheet: 8 of 8

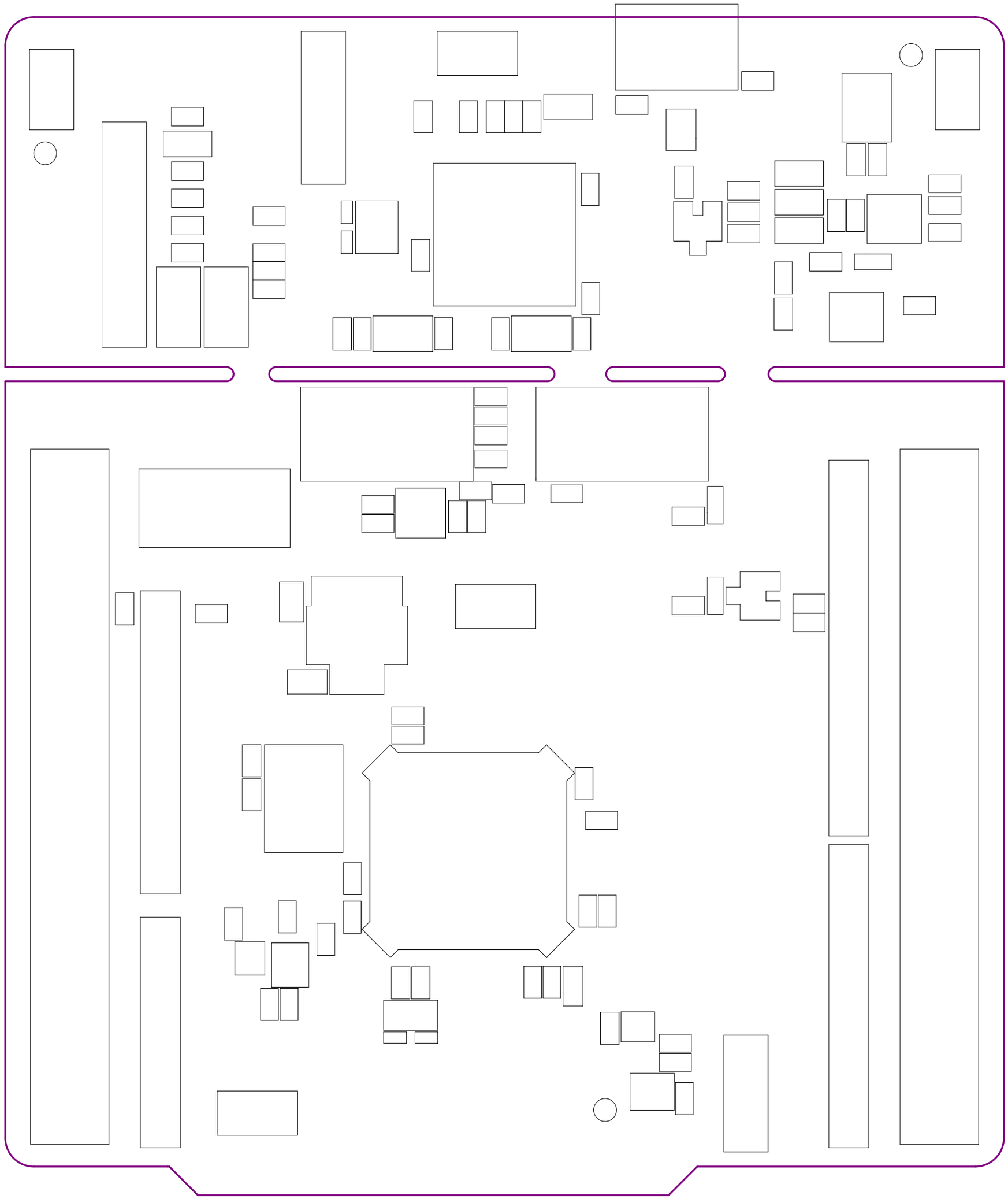

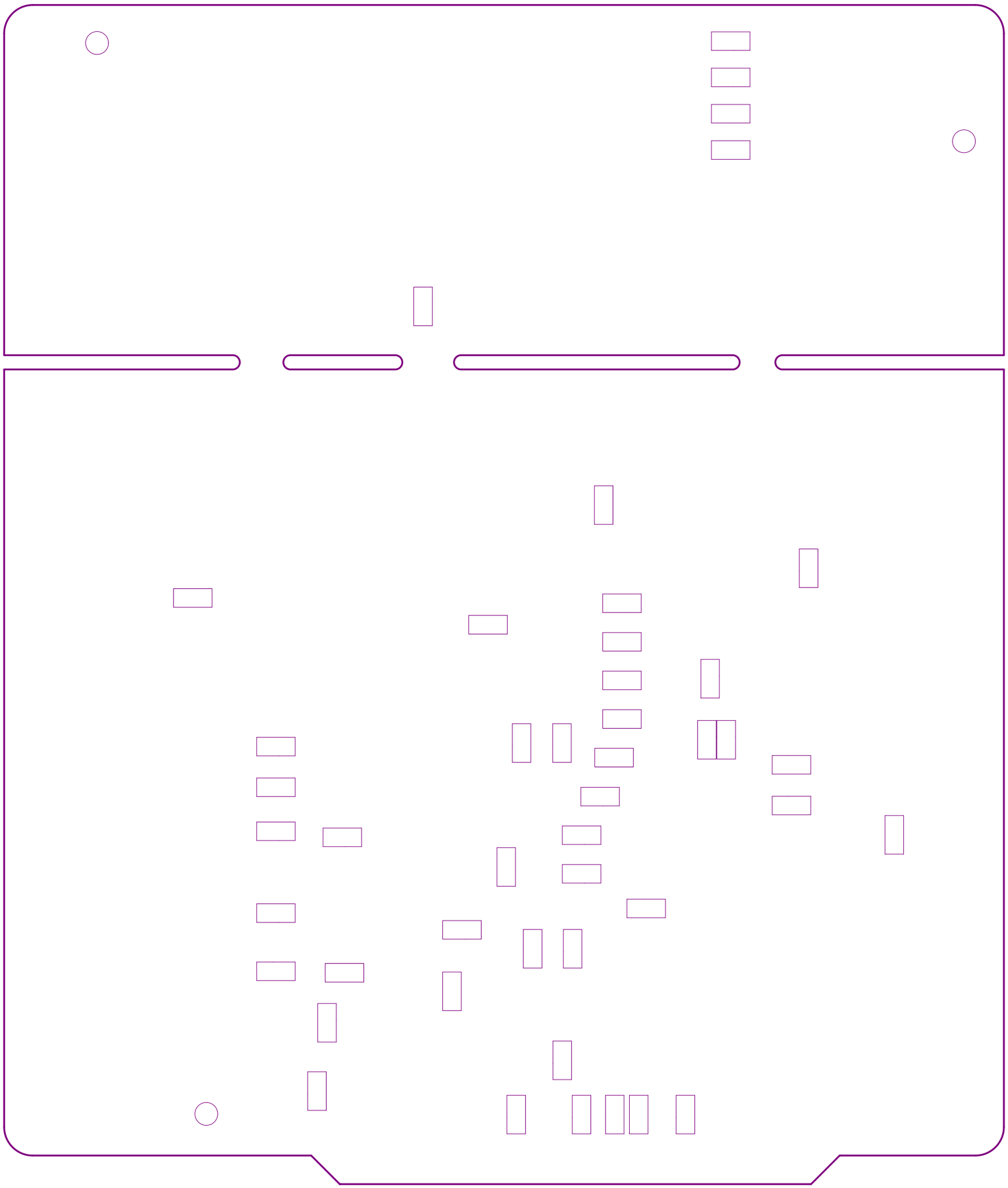

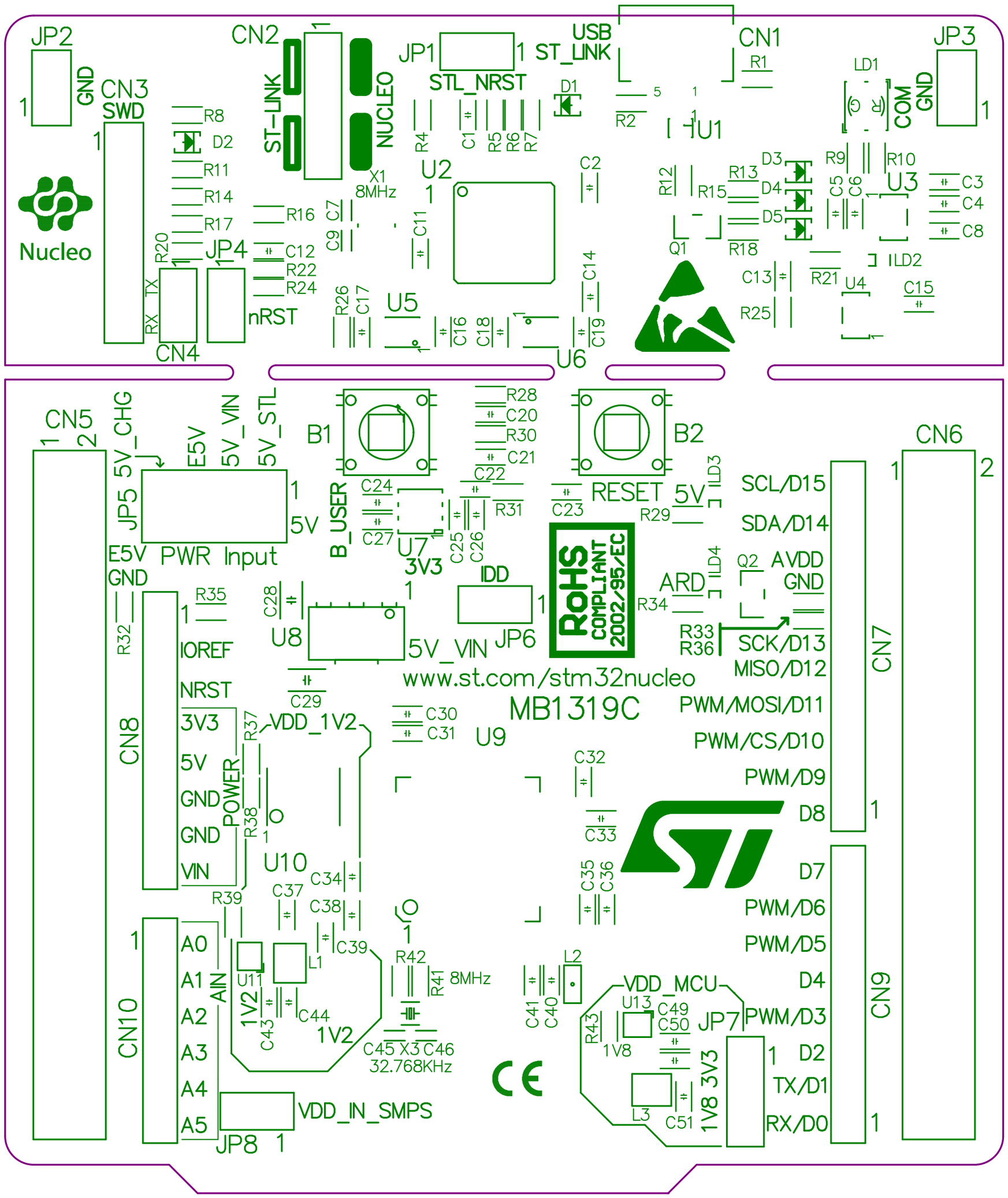

SILKSCREEN, (PRIMARY)

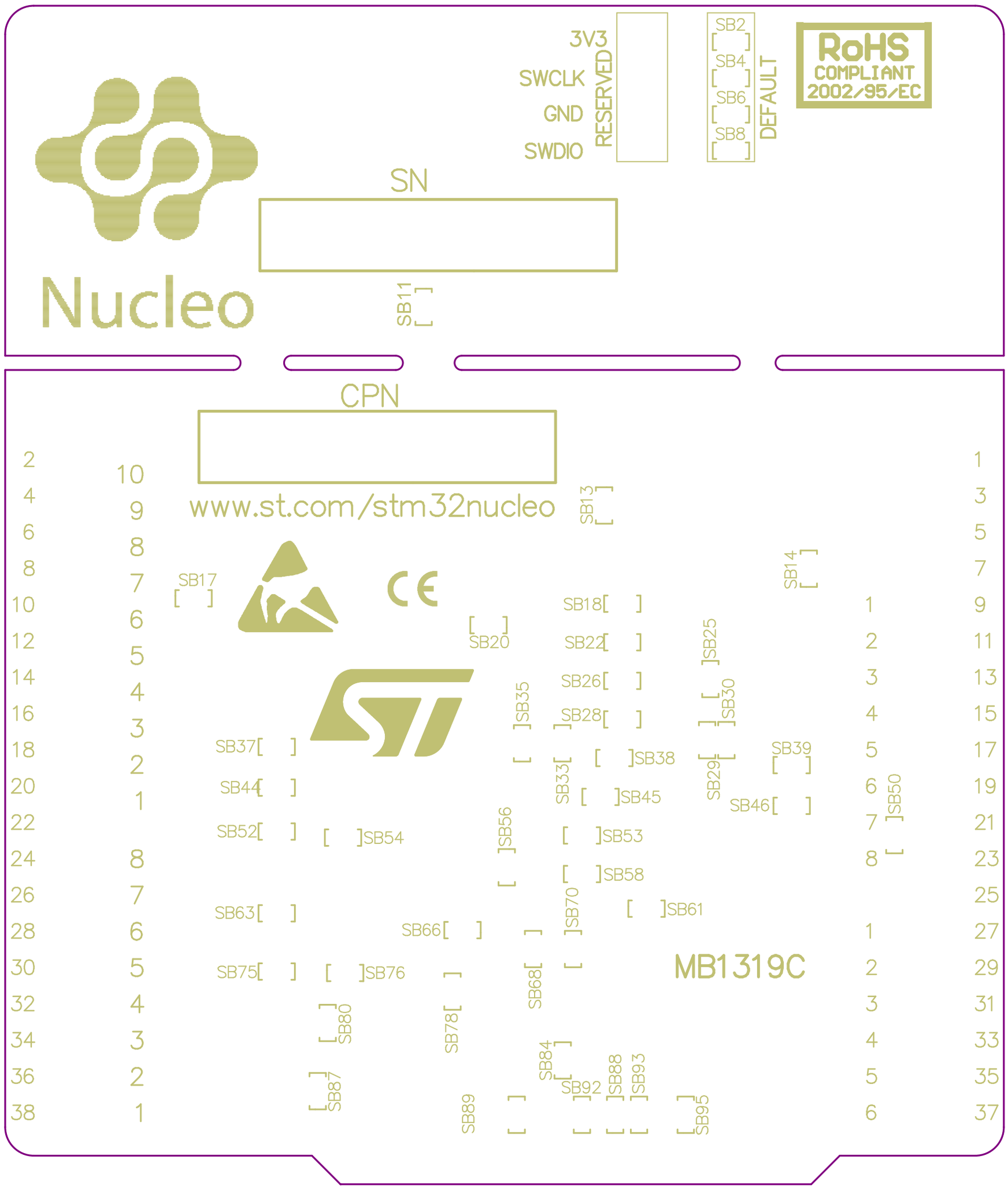

SILKSCREEN, (SECONDARY)