STM32H7xxI-Eval

MB1246

Table of contents

Sheet 1: Project overview (this page)

Sheet 2: Top

Sheet 3: STM32 microcontroller I/Os

Sheet 4: STM32 microcontroller power

Sheet 5: Memory

Sheet 6: Audio

Sheet 7: LCD Connectors

Sheet 8: Ethernet

Sheet 9: USB OTG

Sheet 10: USB OTG FS

Sheet 11: RS232

Sheet 12: FDCAN & QSPI

Sheet 13: SD card

Sheet 14: Peripherals

Sheet 15: Extension connectors

Sheet 16: ST_Link_V3

Sheet 15: MFX

Sheet 15: JTAG & Trace

Legend

General comment such as function title, configuration, ...

Text to be added to silkscreen.

Warning text.

Notes to generate the board layout.

Open Platform License Agreement

The Open Platform License Agreement (“Agreement”) is a binding legal contract between you ("You") and STMicroelectronics International N.V. (“ST”), a company incorporated under the laws of the Netherlands acting for the purpose of this Agreement through its Swiss branch 39, Chemin du Champ des Filles, 1228 Plan-les-Ouates, Geneva, Switzerland.

By using the enclosed reference designs, schematics, PC board layouts, and documentation, in hardcopy or CAD tool file format (collectively, the “Reference Material”), You are agreeing to be bound by the terms and conditions of this Agreement. Do not use the Reference Material until You have read and agreed to this Agreement terms and conditions. The use of the Reference Material automatically implies the acceptance of the Agreement terms and conditions.

The complete Open Platform License Agreement can be found on www.st.com/opla.

U_Top
Top.SchDoc

Title: **Project overview**		
Project: **STM32H7xxI-Eval**		
Variant: H757		
Revision: E -03		Reference: MB1246
Size: A4	Date: 23/05/2022	Sheet: 1 of 18

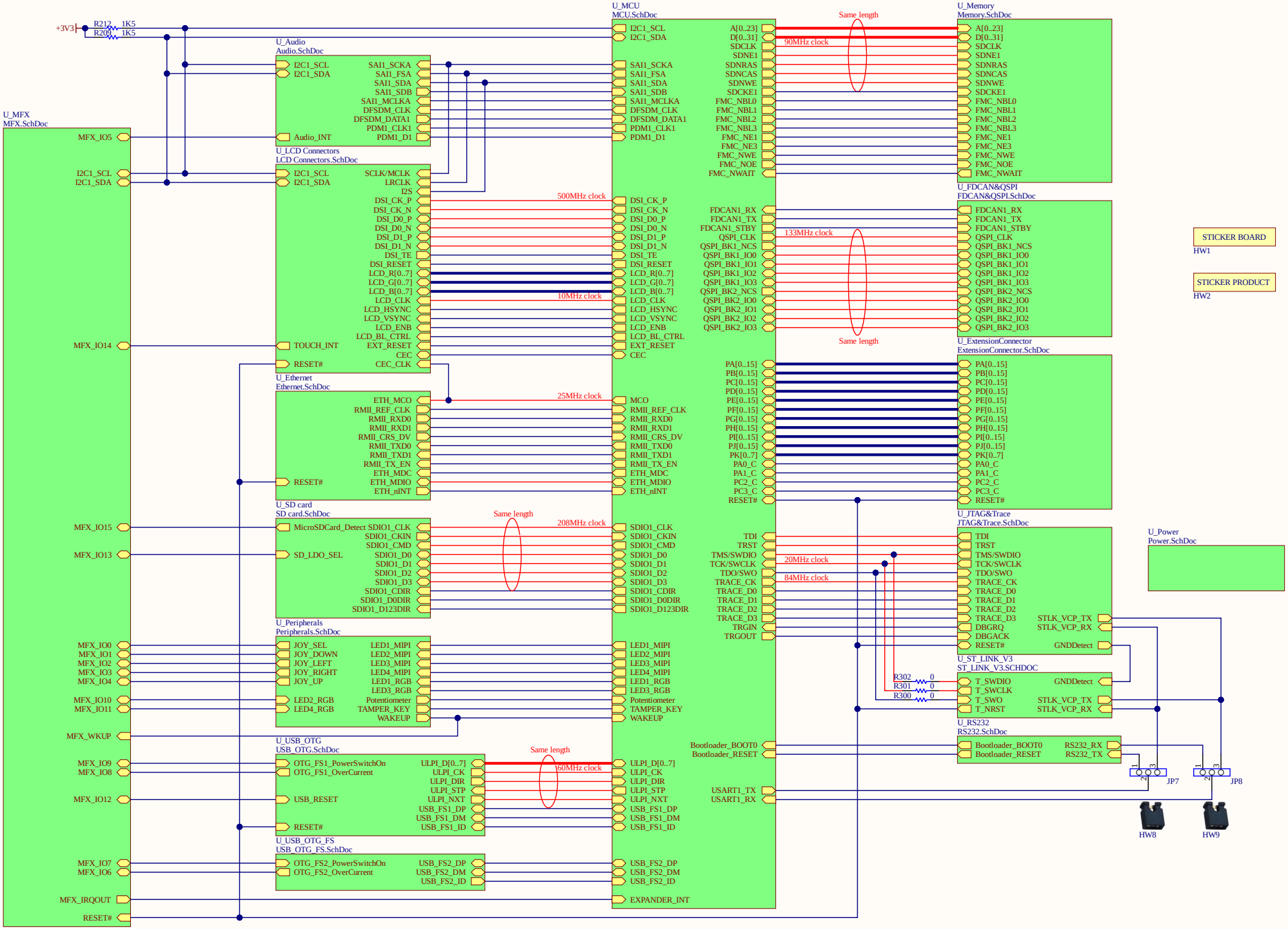

Title: **Top**		
Project: **STM32H7xxI-Eval**		
Variant: H757		
Revision: E-03		Reference: MB1246
Size: A3	Date: 23/05/2022	Sheet: 2 of 18

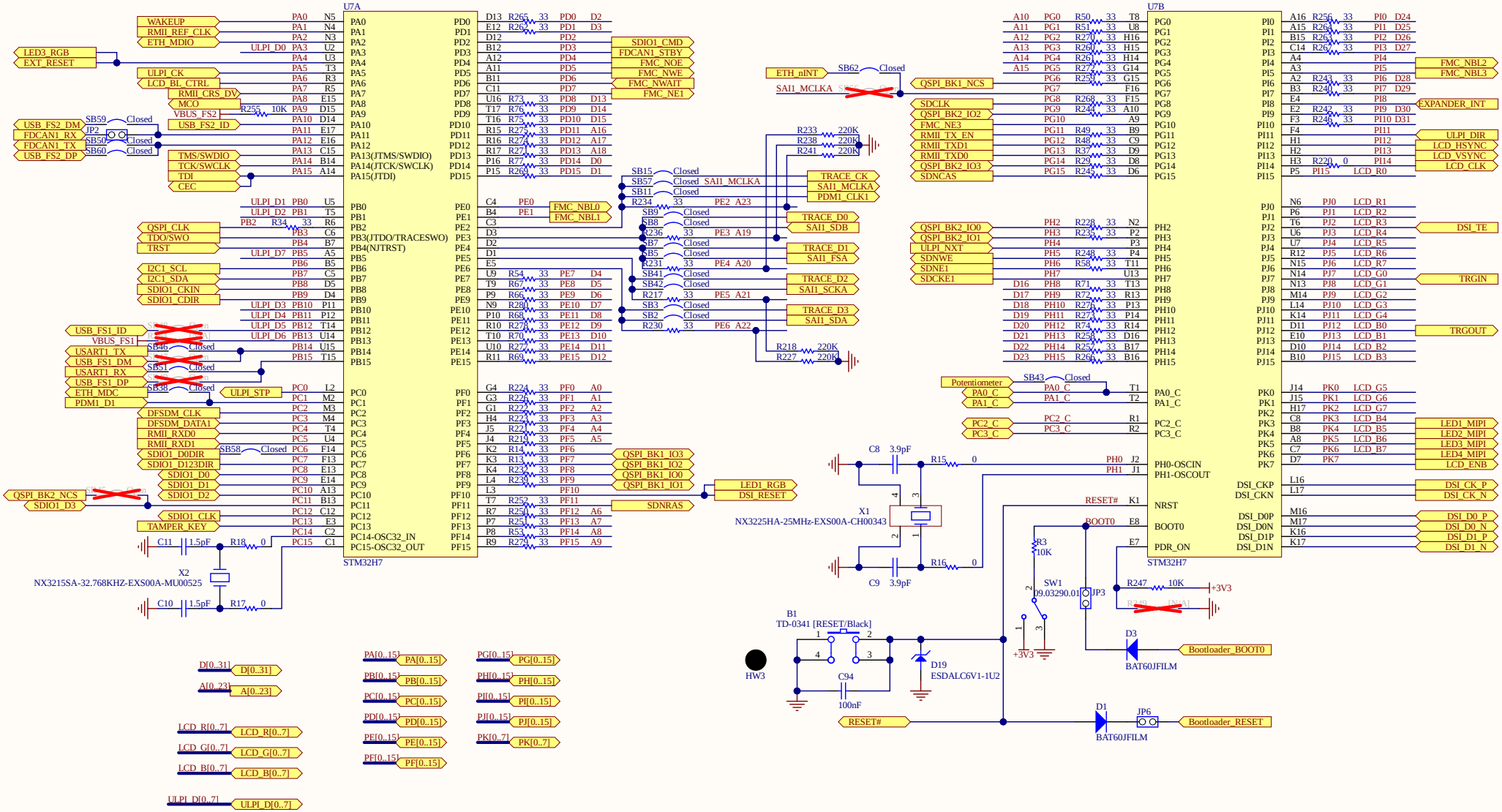

Title: MCU	
Project: STM32H7xxI-Eval	
Variant: H757	
Revision: E-03	Reference: MB1246
Size: A3	Date: 23/05/2022 Sheet: 3 of 18

Power configurations:

Mode	Mount	Removed
LDO mode STM32H7x3 Default setting	SB13,SB23,SB18	SB14,SB16,SB20 SB10,SB17,SB53 L1
SMPS mode STM32H7x7 Default setting	SB14,SB20,SB10 SB53 L1	SB13,SB17,SB23 SB16,SB18
SMPS+LDO mode	SB13,SB23,SB10 SB53, L1	SB14,SB16,SB17 SB18,SB20

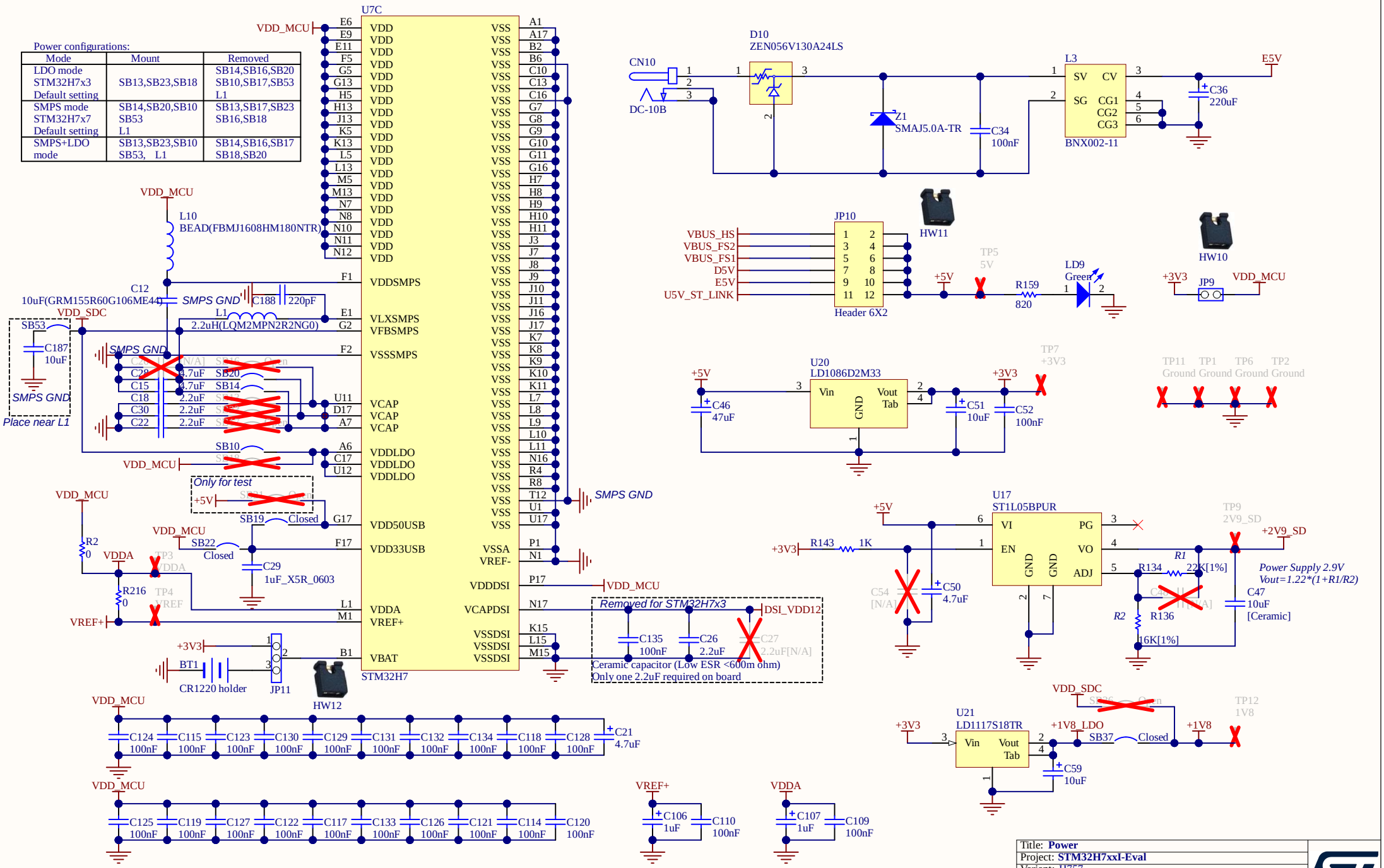

Title: **Power**		
Project: **STM32H7xxI-Eval**		
Variant: H757		
Revision: E -03		Reference: MB1246
Size: A4	Date: 23/05/2022	Sheet: 4 of 18

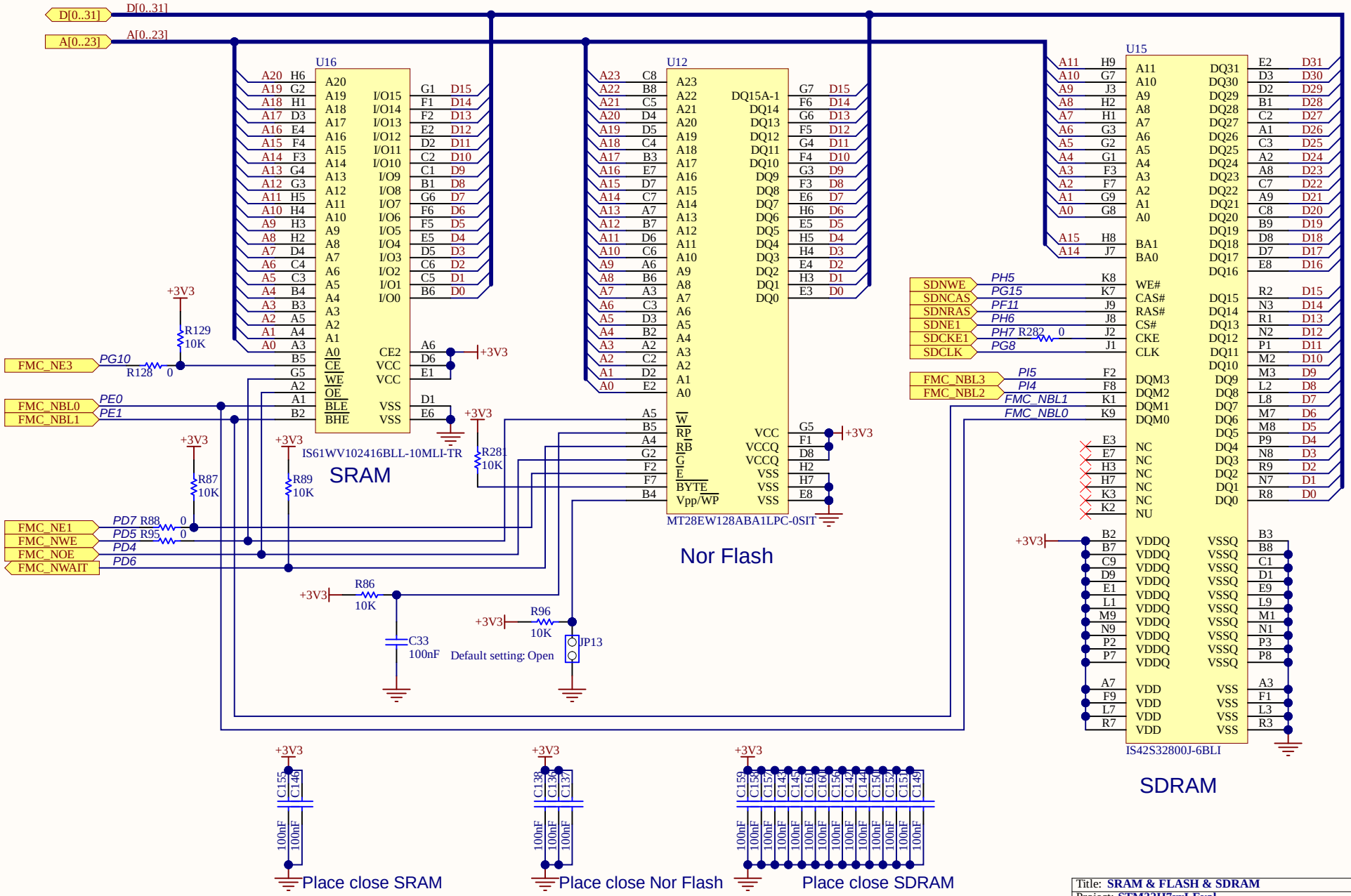

Title: **SRAM & FLASH & SDRAM**		
Project: **STM32H7xxI-Eval**		
Variant: H757		
Revision: E -03		Reference: MB1246
Size: A4	Date: 23/05/2022	Sheet: 5 of 18

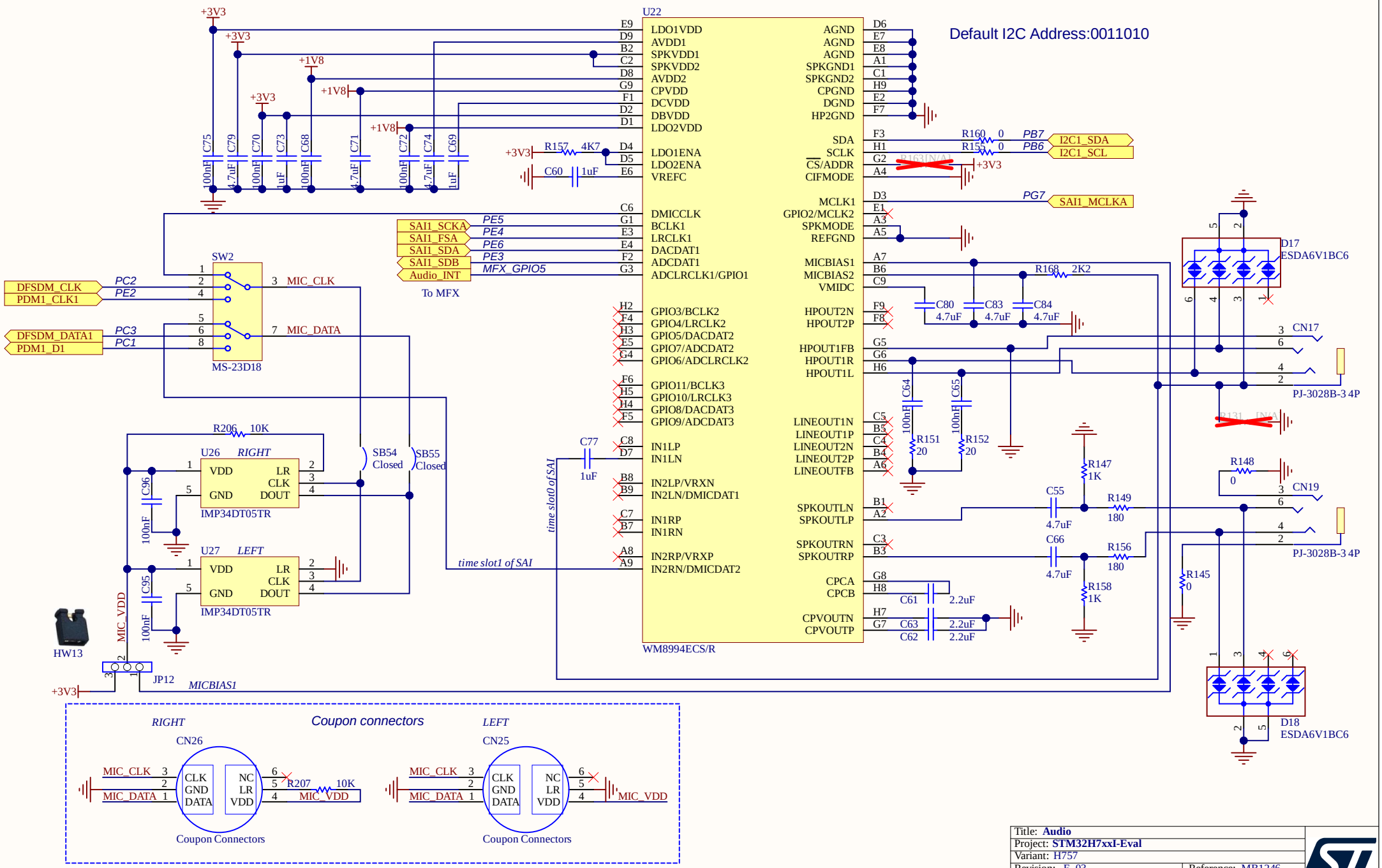

Title: **Audio**		
Project: **STM32H7xxI-Eval**		
Variant: H757		
Revision: E -03		Reference: MB1246
Size: A4	Date: 23/05/2022	Sheet: 6 of 18

DSI LCD

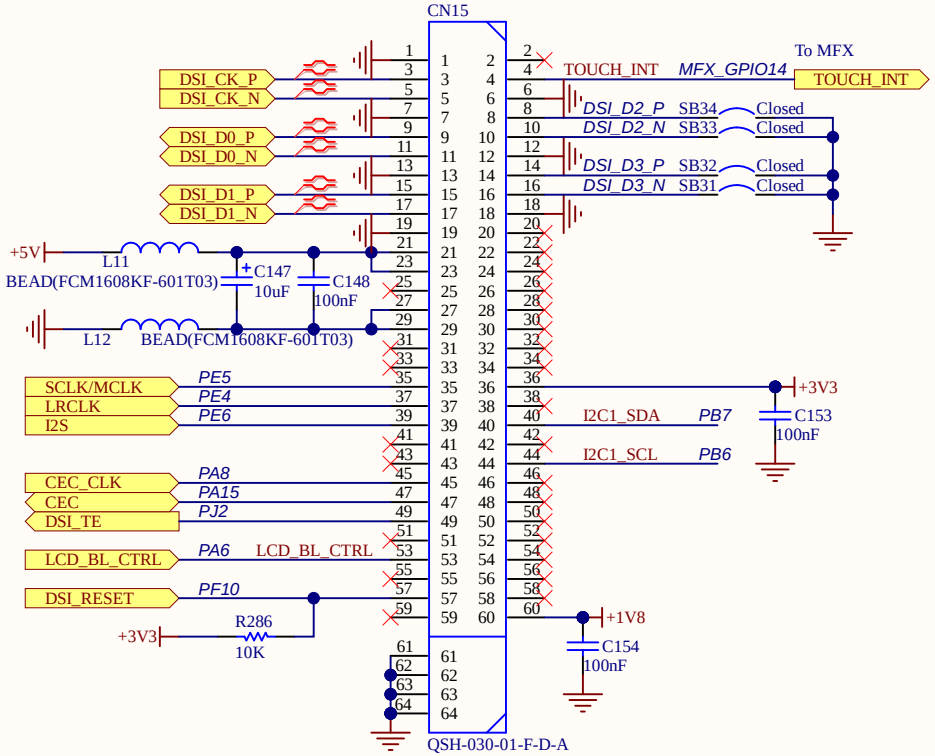

Removed for STM32H7x3

RGB LCD

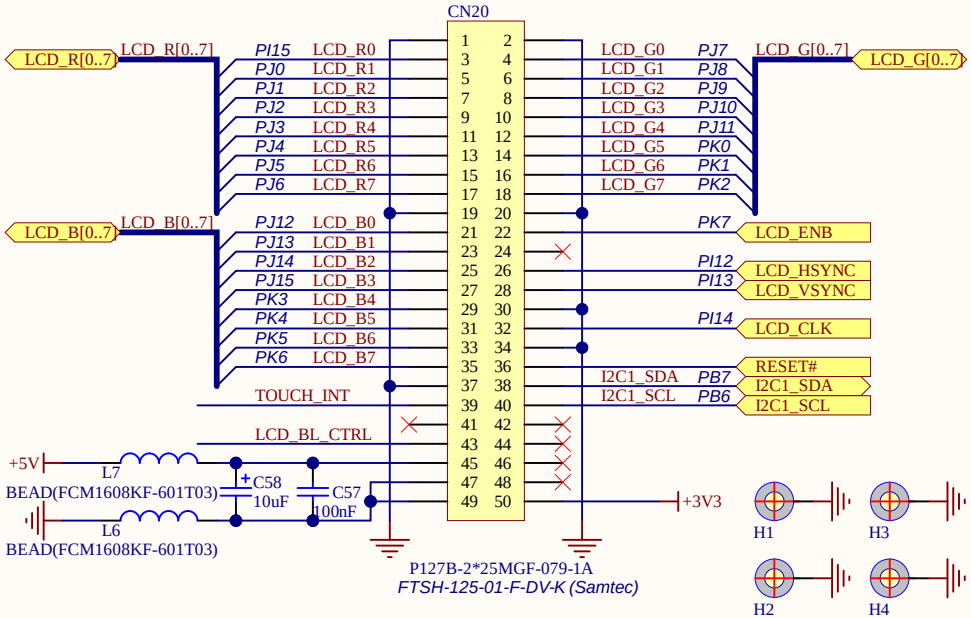

I2C Connector

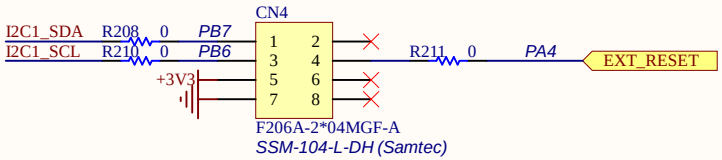

Title: **LCD Connectors**		
Project: **STM32H7xxI-Eval**		
Variant: H757		
Revision: E -03		Reference: MB1246
Size: A4	Date: 23/05/2022	Sheet: 7 of 18

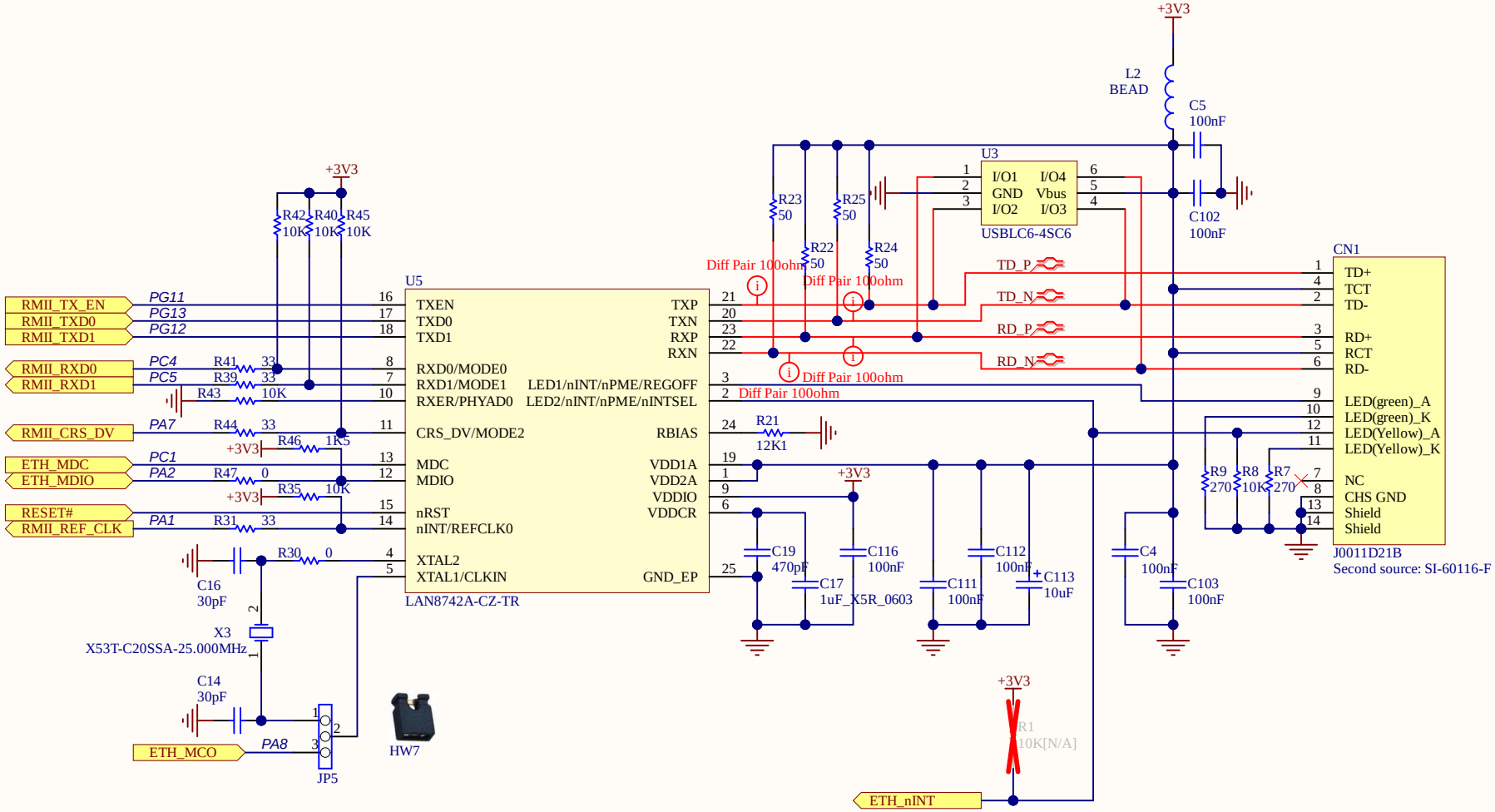

Title: **Ethernet**		
Project: **STM32H7xxI-Eval**		
Variant: H757		
Revision: E -03		Reference: MB1246
Size: A4	Date: 23/05/2022	Sheet: 8 of 18

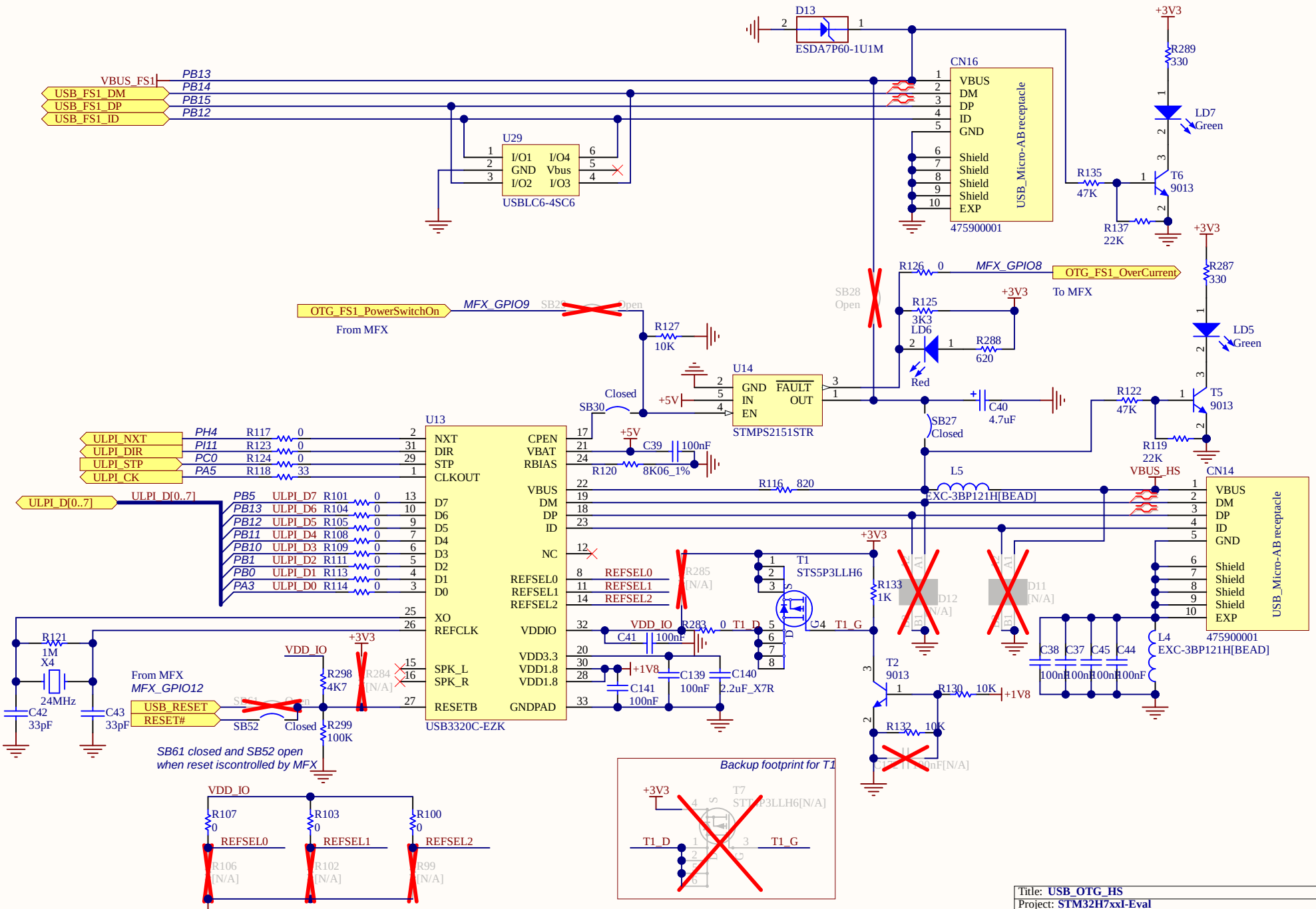

Title: **USB_OTG_HS**		
Project: **STM32H7xxI-Eval**		
Variant: H757		
Revision: E -03		Reference: MB1246
Size: A4	Date: 23/05/2022	Sheet: 9 of 18

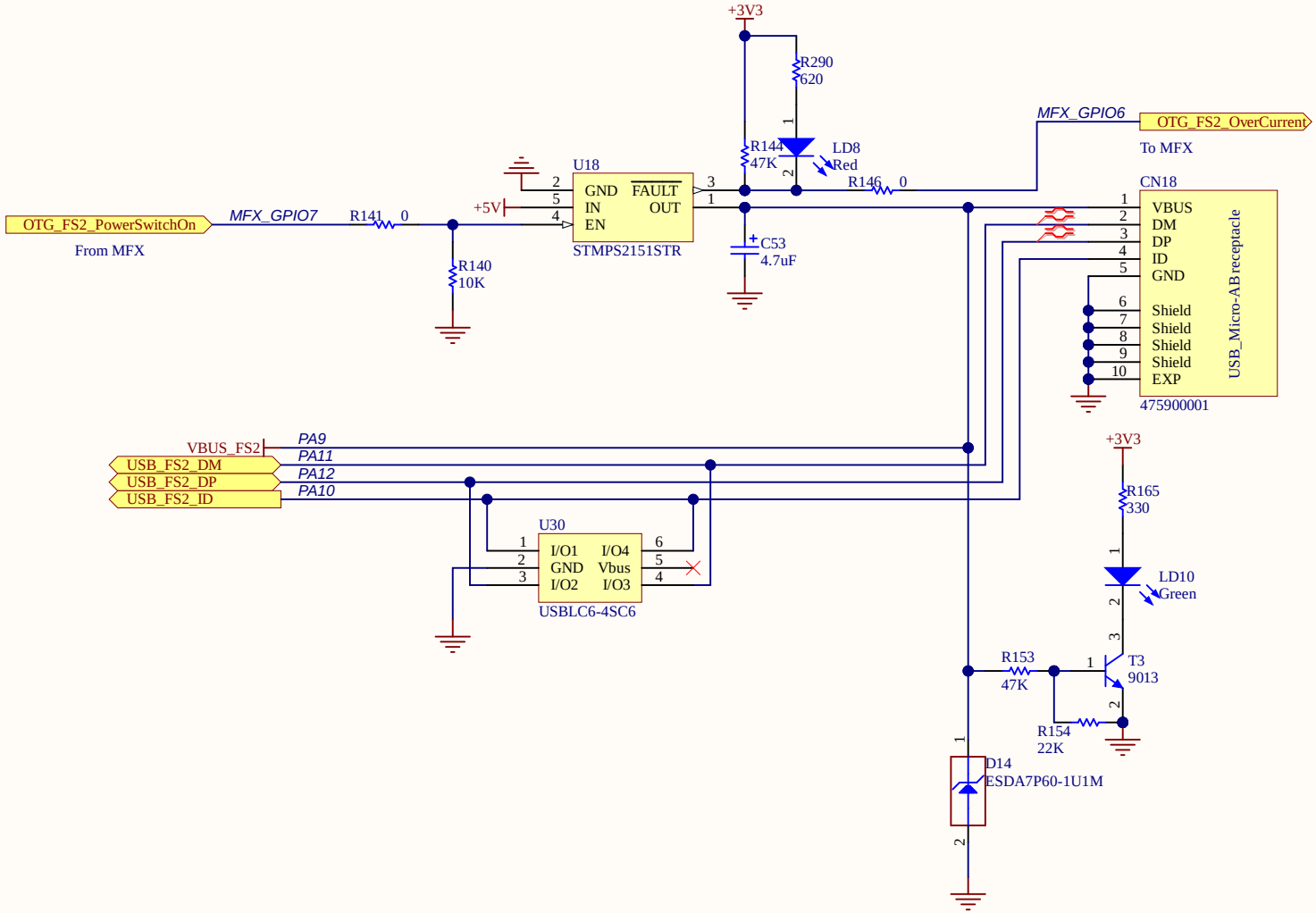

Title: **USB_OTG_FS**		
Project: **STM32H7xxI-Eval**		
Variant: H757		
Revision: E -03		Reference: MB1246
Size: A4	Date: 23/05/2022	Sheet: 10 of 18

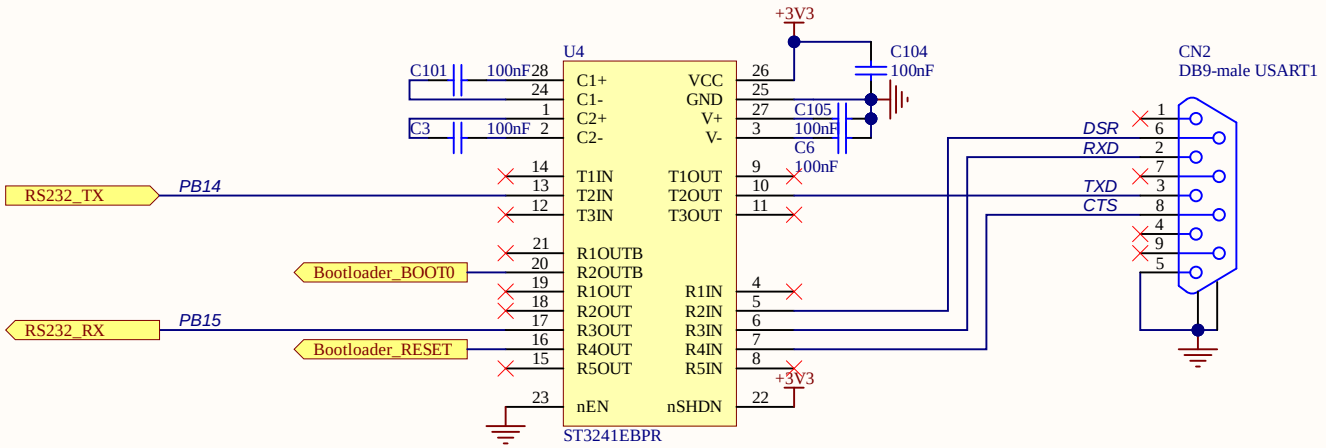

RS232

Title: **RS232**		
Project: **STM32H7xxI-Eval**		
Variant: H757		
Revision: E -03		Reference: MB1246
Size: A4	Date: 23/05/2022	Sheet: 11 of 18

FDCAN

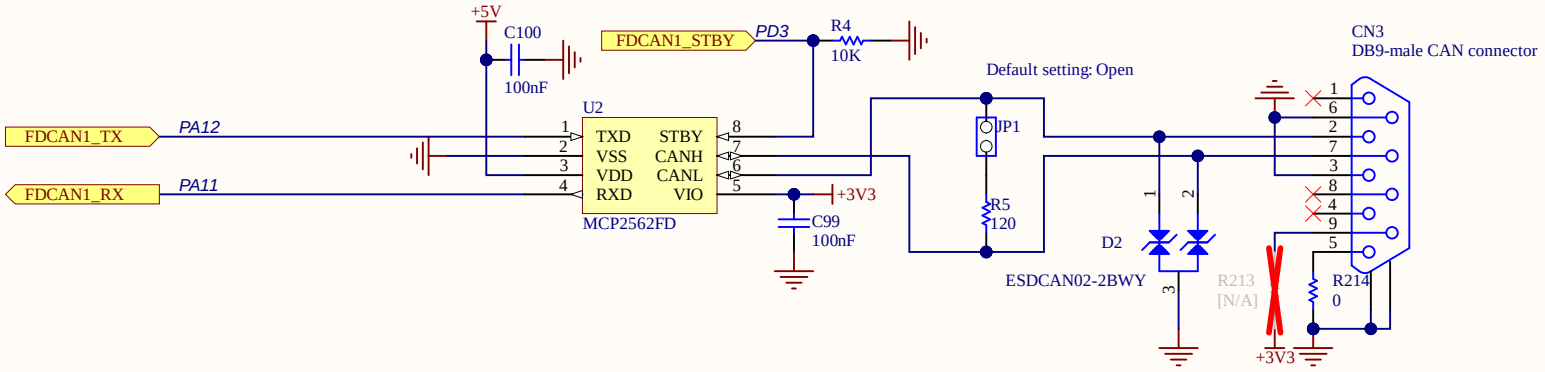

Twin Quad SPI Flash

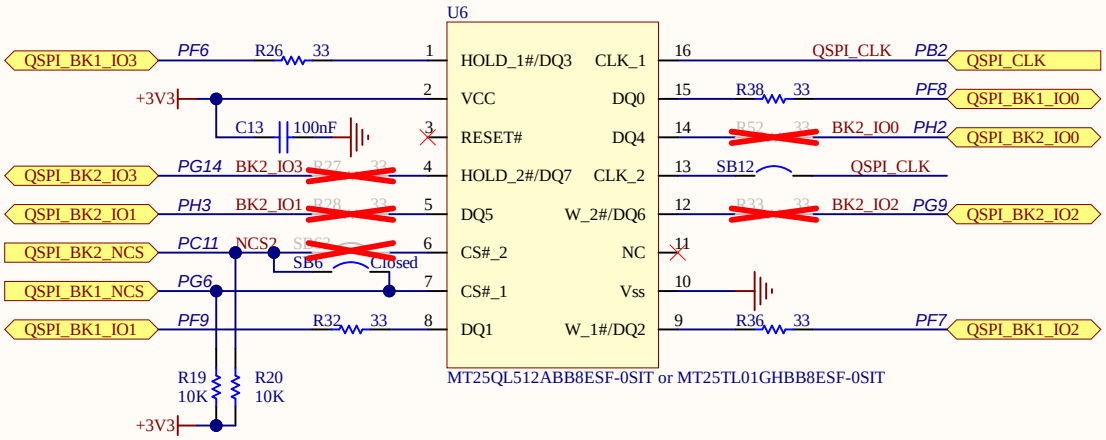

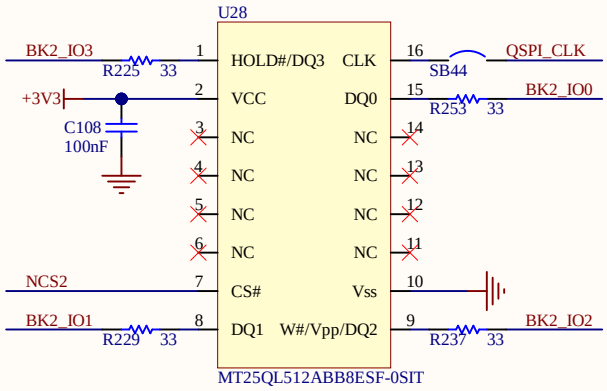

Removed when using One Twin Quad SPI Flash

Twin Quad SPI Flash configurations:

Two Quad SPI Flash	U6:MT25QL512ABB8ESF-0SIT	U28:MT25QL512ABB8ESF-0SIT	R225/R229/R237/R253, SB44, C108 ONR27/R28/R33/R52, SB12/SB63 OFF
One Twin Quad SPI Flash	U6:MT25TL01GHBB8ESF-0SIT	U28:NA	R27/R28/R33/R52, SB12/SB63 ON R225/R229/R237/R253, SB44, C108 OFF

Title: **FDCAN & QSPI**		
Project: **STM32H7xxI-Eval**		
Variant: H757		
Revision: E -03		Reference: MB1246
Size: A4	Date: 23/05/2022	Sheet: 12 of 18

MICRO SD 3.0 Card

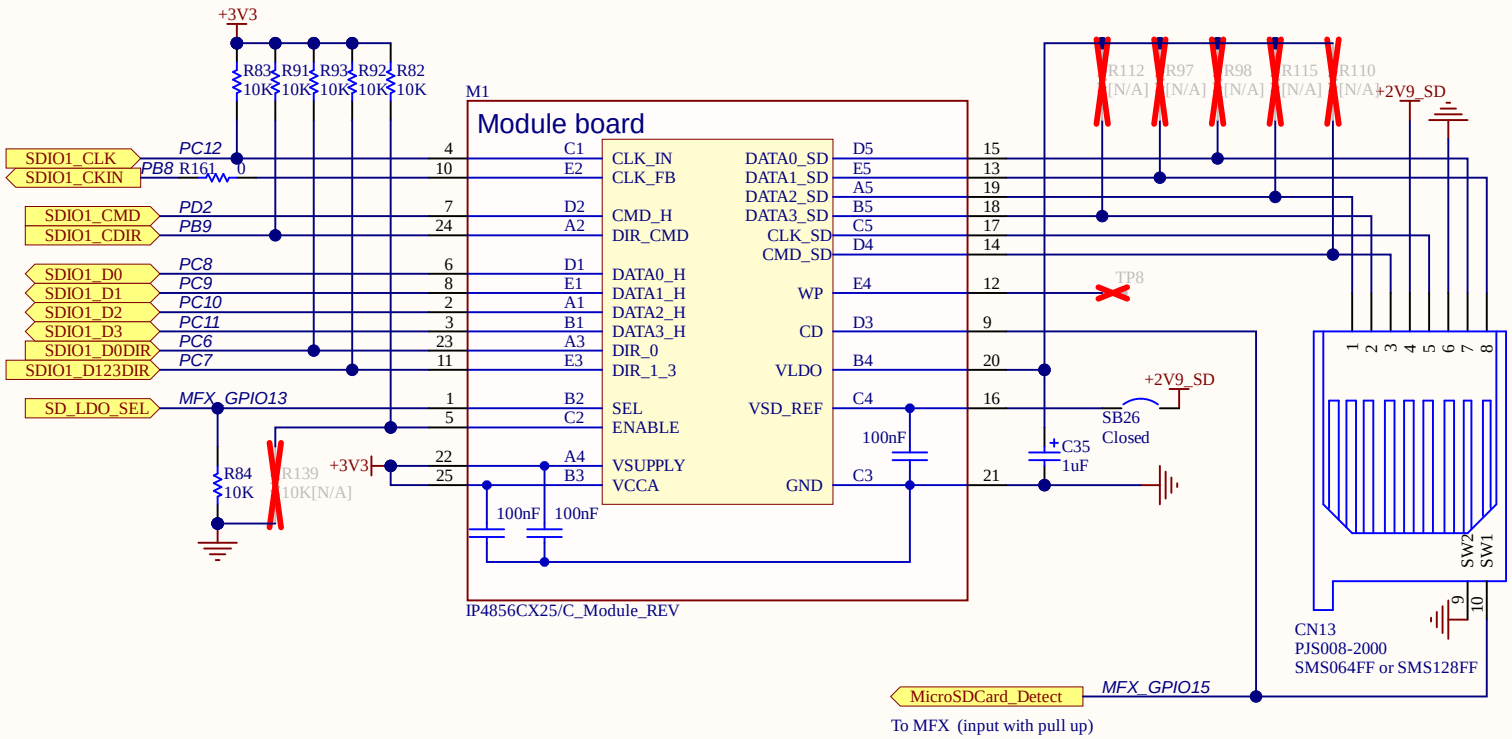

Title: **MICRO SD 3.0 Card**		
Project: **STM32H7xxI-Eval**		
Variant: H757		
Revision: E -03		Reference: MB1246
Size: A4	Date: 23/05/2022	Sheet: 13 of 18

Buttons

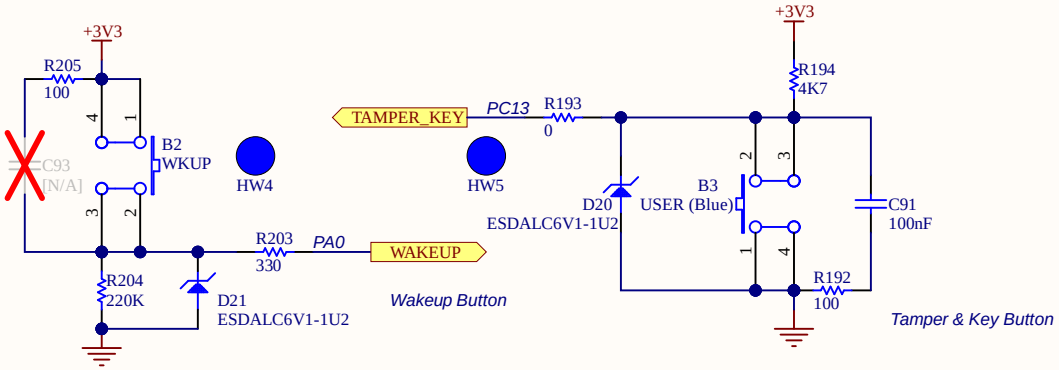

Potentiometer

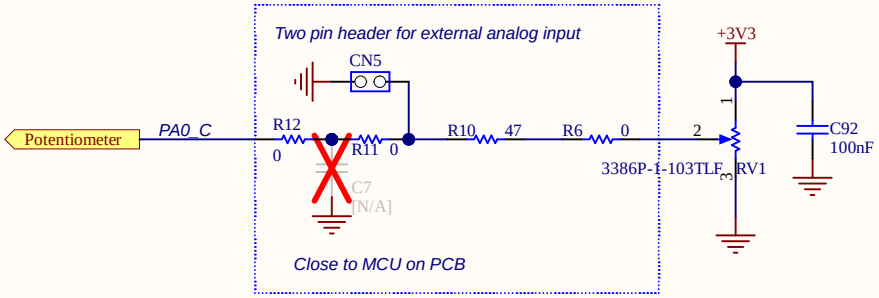

Joystick

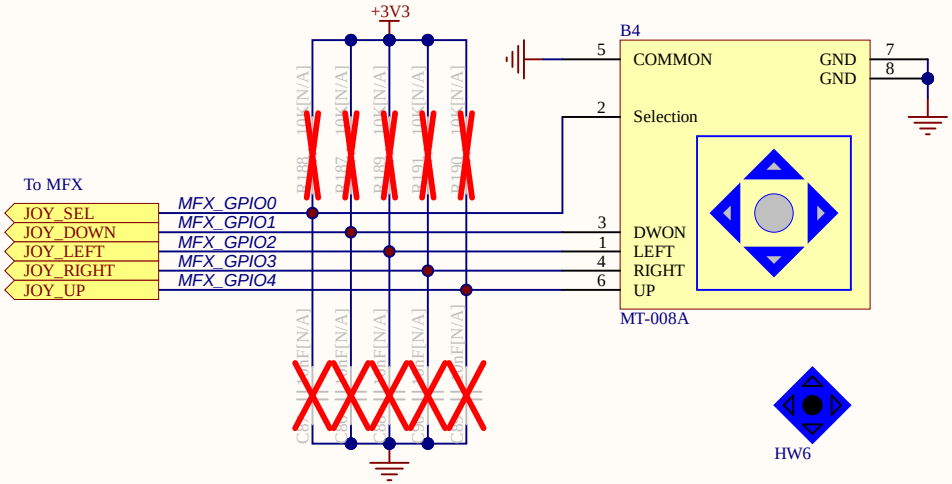

LEDs

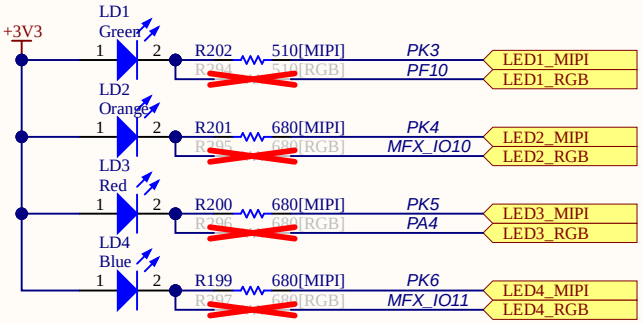

Title: **Peripherals**		
Project: **STM32H7xxI-Eval**		
Variant: H757		
Revision: E -03		Reference: MB1246
Size: A4	Date: 23/05/2022	Sheet: 14 of 18

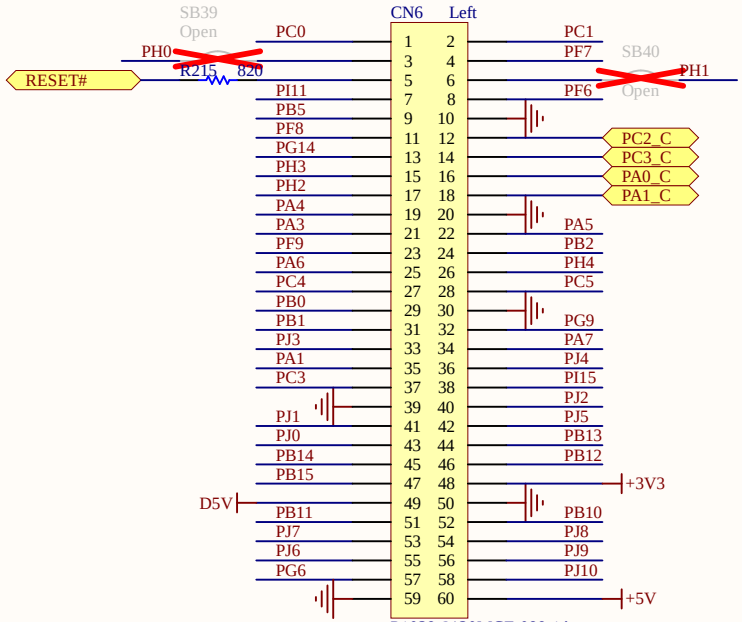

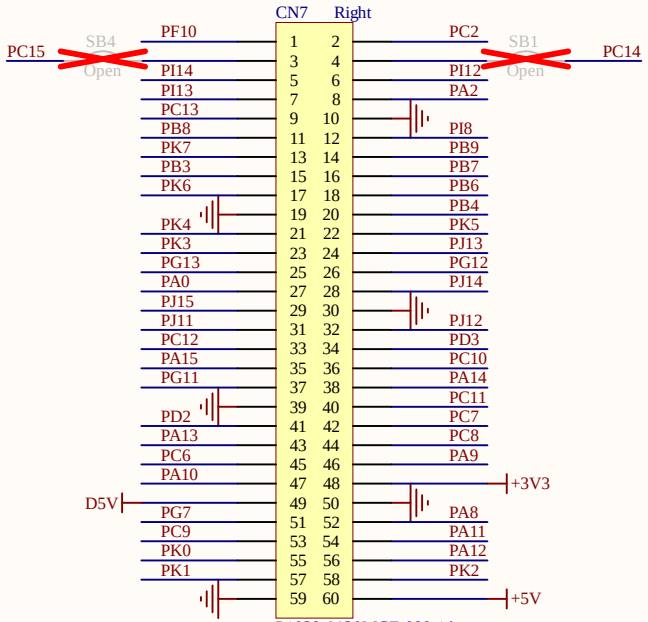

Place close Memory

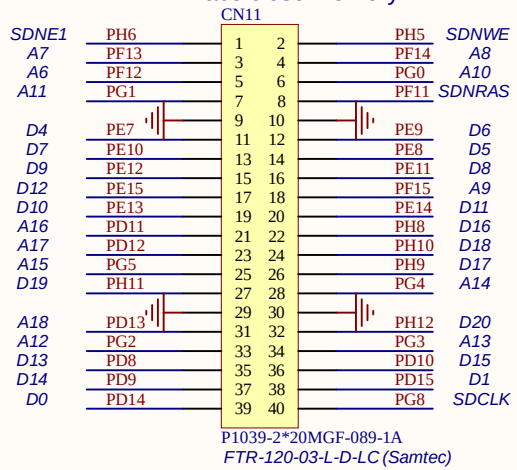

Place close Memory

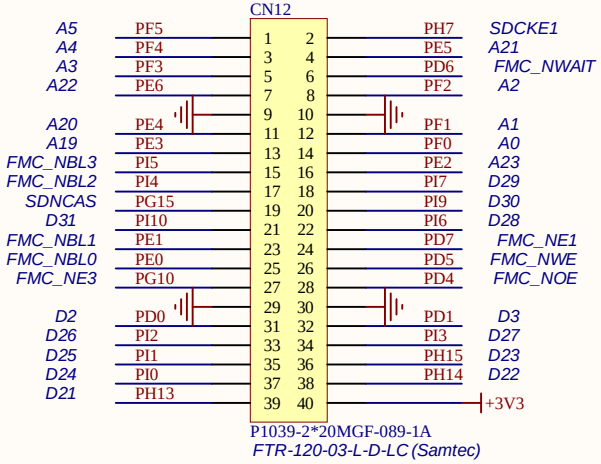

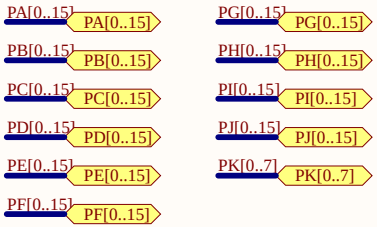

Title: **Extension Connectors**		
Project: **STM32H7xxI-Eval**		
Variant: H757		
Revision: E -03		Reference: MB1246
Size: A4	Date: 23/05/2022	Sheet: 15 of 18

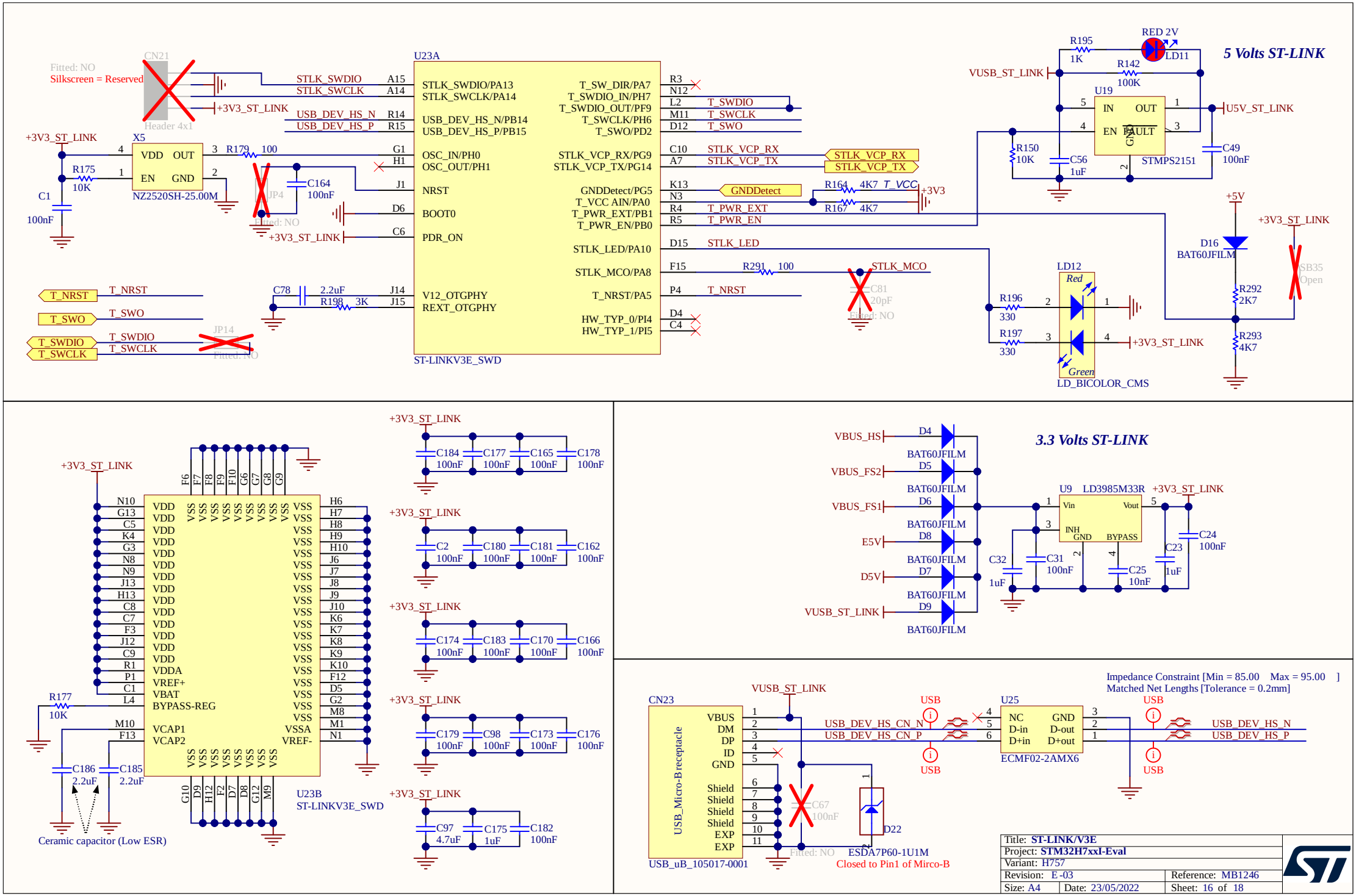
5 Volts ST-LINK
3.3 Volts ST-LINK
U23A
ST-LINKV3E_SWD
U23B
ST-LINKV3E_SWD
CN21
Fitted: NO
Silkscreen = Reserved
Header 4x1
X5
NZ2520SH-25.00M
JP4
JP14
STLK_SWDIO
STLK_SWCLK
USB_DEV_HS_N
USB_DEV_HS_P
T_SWDIO
T_SWCLK
T_SWO
STLK_VCP_RX
STLK_VCP_TX
GNDDetect
T_VCC
T_PWR_EXT
T_PWR_EN
STLK_LED
STLK_MCO
T_NRST
+3V3_ST_LINK
+3V3
+5V
U5V_ST_LINK
VUSB_ST_LINK
RED 2V
LD11
U19
STMPS2151
LD12
LD_BICOLOR_CMS
D16
BAT60JFILM
SB35
Open
U9
LD3985M33R
VBUS_HS
VBUS_FS2
VBUS_FS1
E5V
D5V
D4
D5
D6
D8
D7
D9
CN23
USB_Micro-Breeceptacle
USB_uB_105017-0001
USB_DEV_HS_CN_N
USB_DEV_HS_CN_P
USB_DEV_HS_N
USB_DEV_HS_P
U25
ECMF02-2AMX6
D22
ESDA7P60-1U1M
Closed to Pin1 of Mirco-B
Impedance Constraint [Min = 85.00 Max = 95.00]
Matched Net Lengths [Tolerance = 0.2mm]
Ceramic capacitor (Low ESR)
Title: ST-LINK/V3E
Project: STM32H7xxI-Eval
Variant: H757
Revision: E -03
Reference: MB1246
Size: A4
Date: 23/05/2022
Sheet: 16 of 18

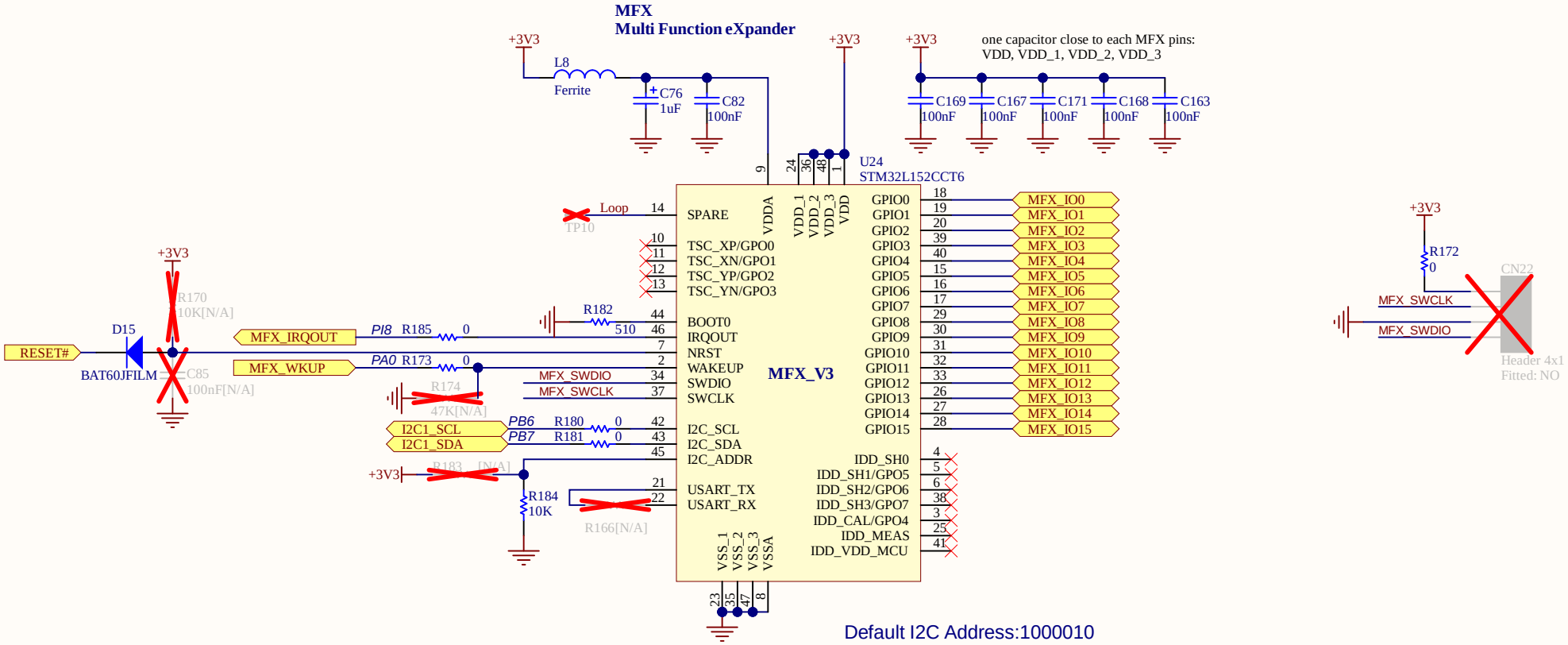

Title: **MFX**		
Project: **STM32H7xxI-Eval**		
Variant: H757		
Revision: E -03		Reference: MB1246
Size: A4	Date: 23/05/2022	Sheet: 17 of 18

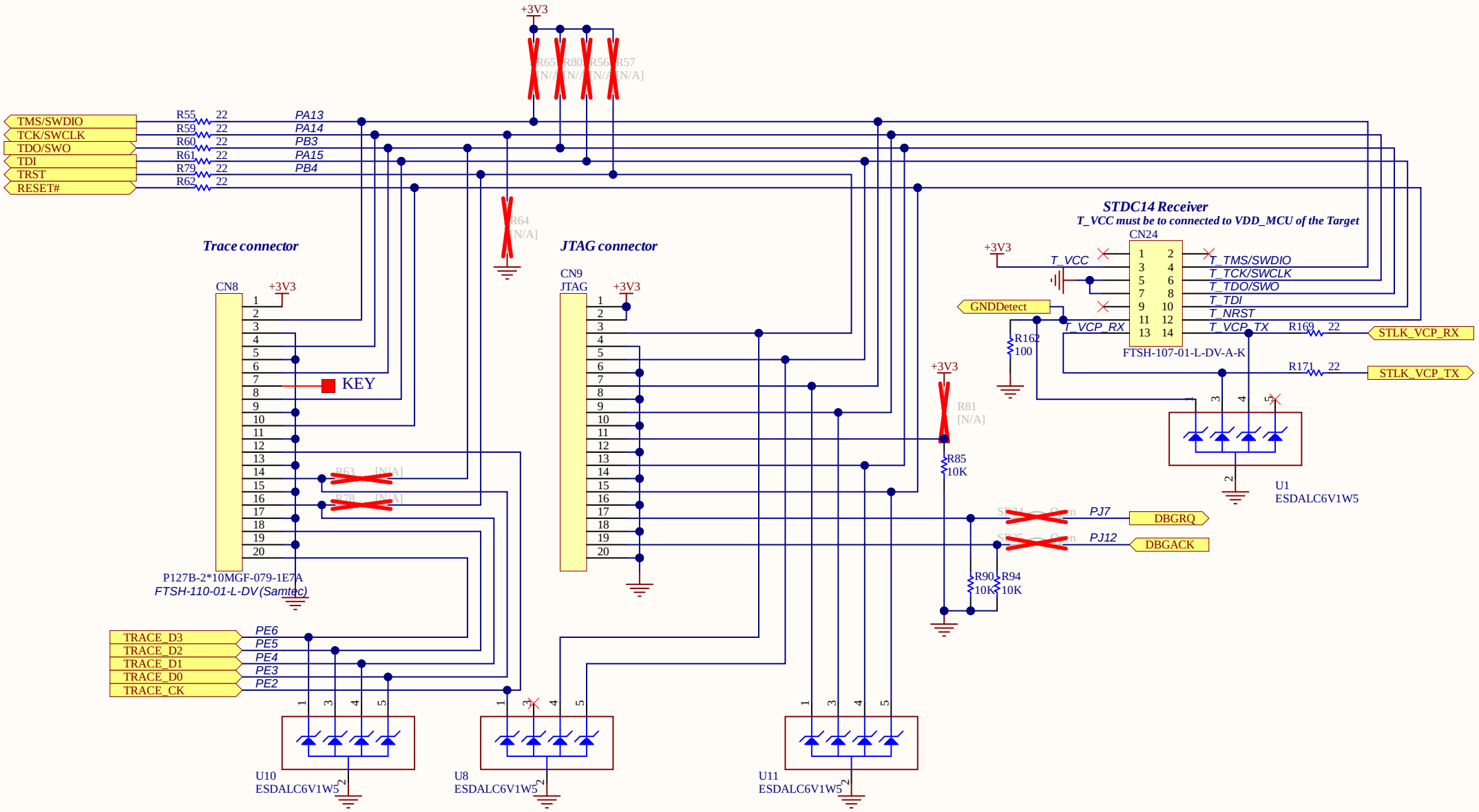

Title: **JTAG & Trace**		
Project: **STM32H7xxI-Eval**		
Variant: H757		
Revision: E -03		Reference: MB1246
Size: A4	Date: 23/05/2022	Sheet: 18 of 18