# STM32H7xxI-Eval

## MB1246

## Table of contents


Sheet 1: Project overview (this page)

Sheet 2: Top

Sheet 3: STM32 microcontroller I/Os

Sheet 4: STM32 microcontroller power

Sheet 5: Memory

Sheet 6: Audio

Sheet 7: LCD Connectors

Sheet 8: Ethernet

Sheet 9: USB OTG

Sheet 10: USB OTG FS

Sheet 11: RS232

Sheet 12: FDCAN & QSPI

Sheet 13: SD card

Sheet 14: Peripherals

Sheet 15: Extension connectors

Sheet 16: ST_Link_V3

Sheet 15: MFX

Sheet 15: JTAG & Trace


## Legend

General comment such as function title, configuration, ...

Text to be added to silkscreen.

Warning text.

Notes to generate the board layout.

## Open Platform License Agreement


The Open Platform License Agreement (“Agreement”) is a binding legal contract between you ("You") and STMicroelectronics International N.V. (“ST”), a company incorporated under the laws of the Netherlands acting for the purpose of this Agreement through its Swiss branch 39, Chemin du Champ des Filles, 1228 Plan-les-Ouates, Geneva, Switzerland.

By using the enclosed reference designs, schematics, PC board layouts, and documentation, in hardcopy or CAD tool file format (collectively, the “Reference Material”), You are agreeing to be bound by the terms and conditions of this Agreement. Do not use the Reference Material until You have read and agreed to this Agreement terms and conditions. The use of the Reference Material automatically implies the acceptance of the Agreement terms and conditions.

The complete Open Platform License Agreement can be found on www.st.com/opla.


U_Top
Top.SchDoc

| | | |
|---|---|---|
| Title: **Project overview** | | |
| Project: **STM32H7xxI-Eval** | | |
| Variant: H757 | | |
| Revision: E -02 | | Reference: MB1246 |
| Size: A4 | Date: 13/02/2019 | Sheet: 1 of 18 |

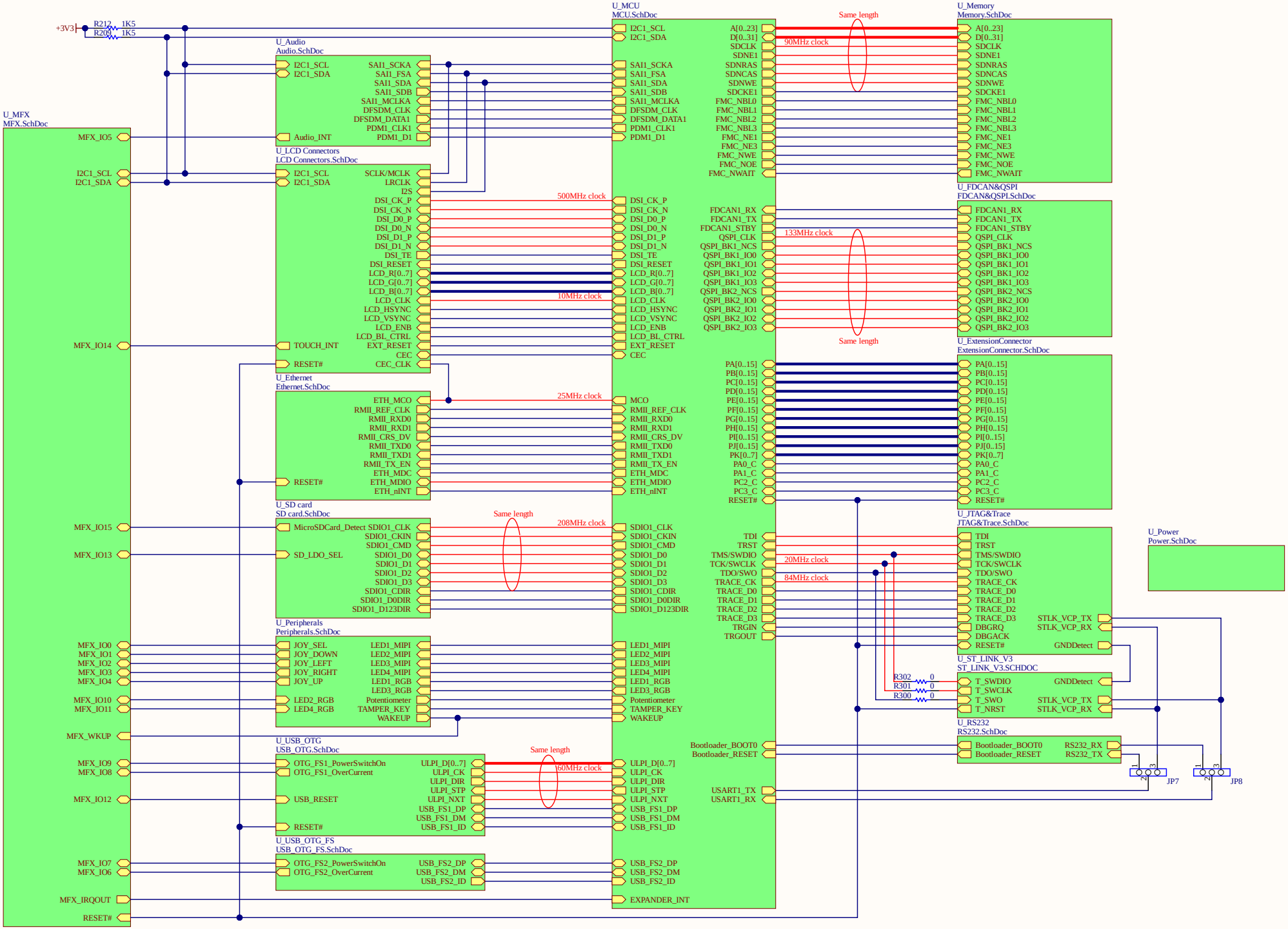


| | | | |
|---|---|---|---|
| Title: **Top** | | | |
| Project: **STM32H7xxI-Eval** | | | |
| Variant: H757 | | | |
| Revision: E-02 | | Reference: MB1246 | |
| Size: A3 | Date: 13/02/2019 | Sheet: 2 of 18 | |

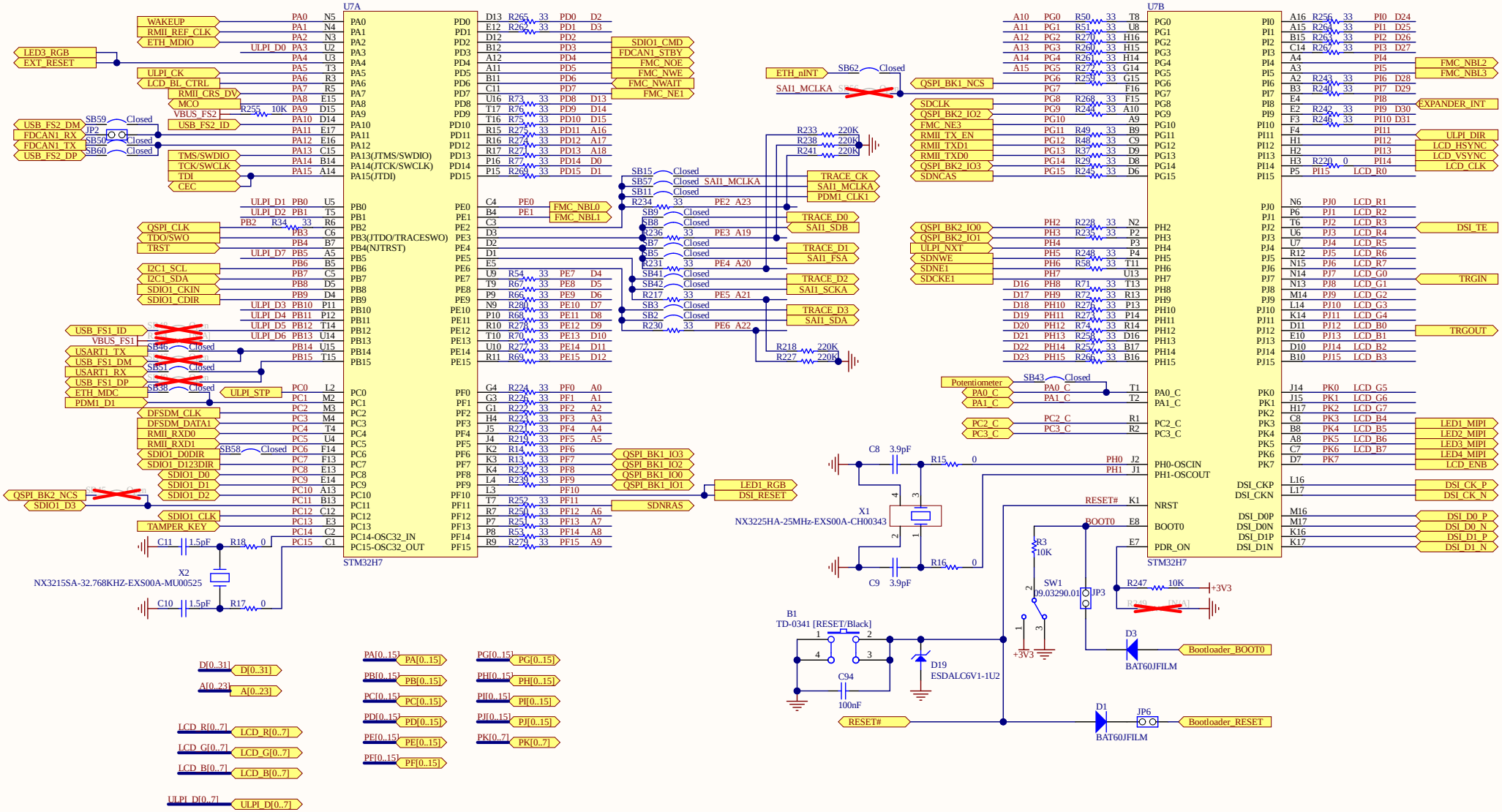


| | |
|---|---|
| Title: MCU | |
| Project: STM32H7xxI-Eval | |
| Variant: H757 | |
| Revision: E-02 | Reference: MB1246 |
| Size: A3 | Date: 13/02/2019 | Sheet: 3 of 18 |

Power configurations:

| Mode | Mount | Removed |
|---|---|---|
| LDO mode<br>STM32H7x3<br>Default setting | SB13,SB23,SB18 | SB14,SB16,SB20<br>SB10,SB17,SB53<br>L1 |
| SMPS mode<br>STM32H7x7<br>Default setting | SB14,SB20,SB10<br>SB53<br>L1 | SB13,SB17,SB23<br>SB16,SB18 |
| SMPS+LDO<br>mode | SB13,SB23,SB10<br>SB53, L1 | SB14,SB16,SB17<br>SB18,SB20 |

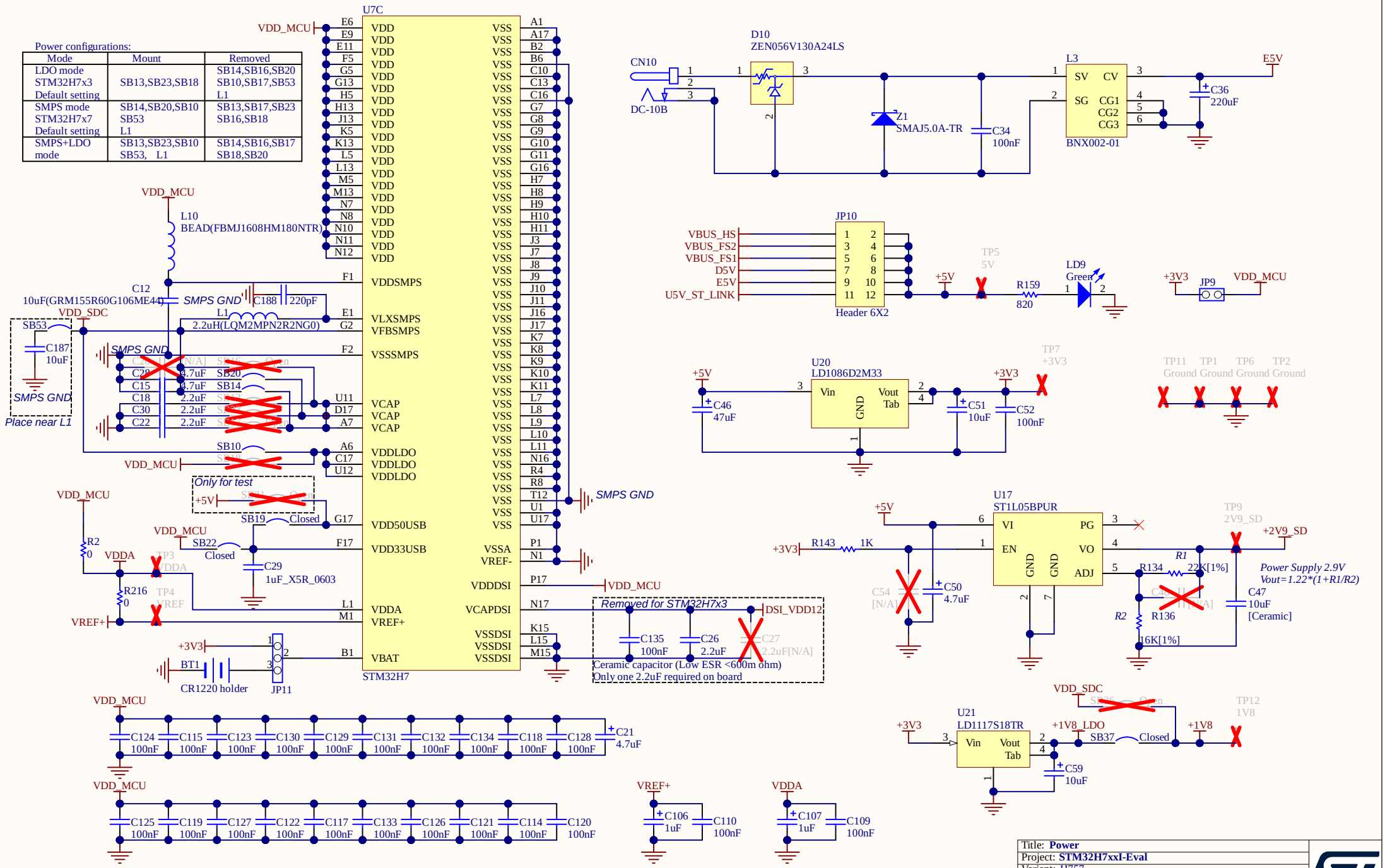


| | | |
|---|---|---|
| Title: **Power** | | |
| Project: **STM32H7xxI-Eval** | | |
| Variant: H757 | | |
| Revision: E -02 | | Reference: MB1246 |
| Size: A4 | Date: 13/02/2019 | Sheet: 4 of 18 |

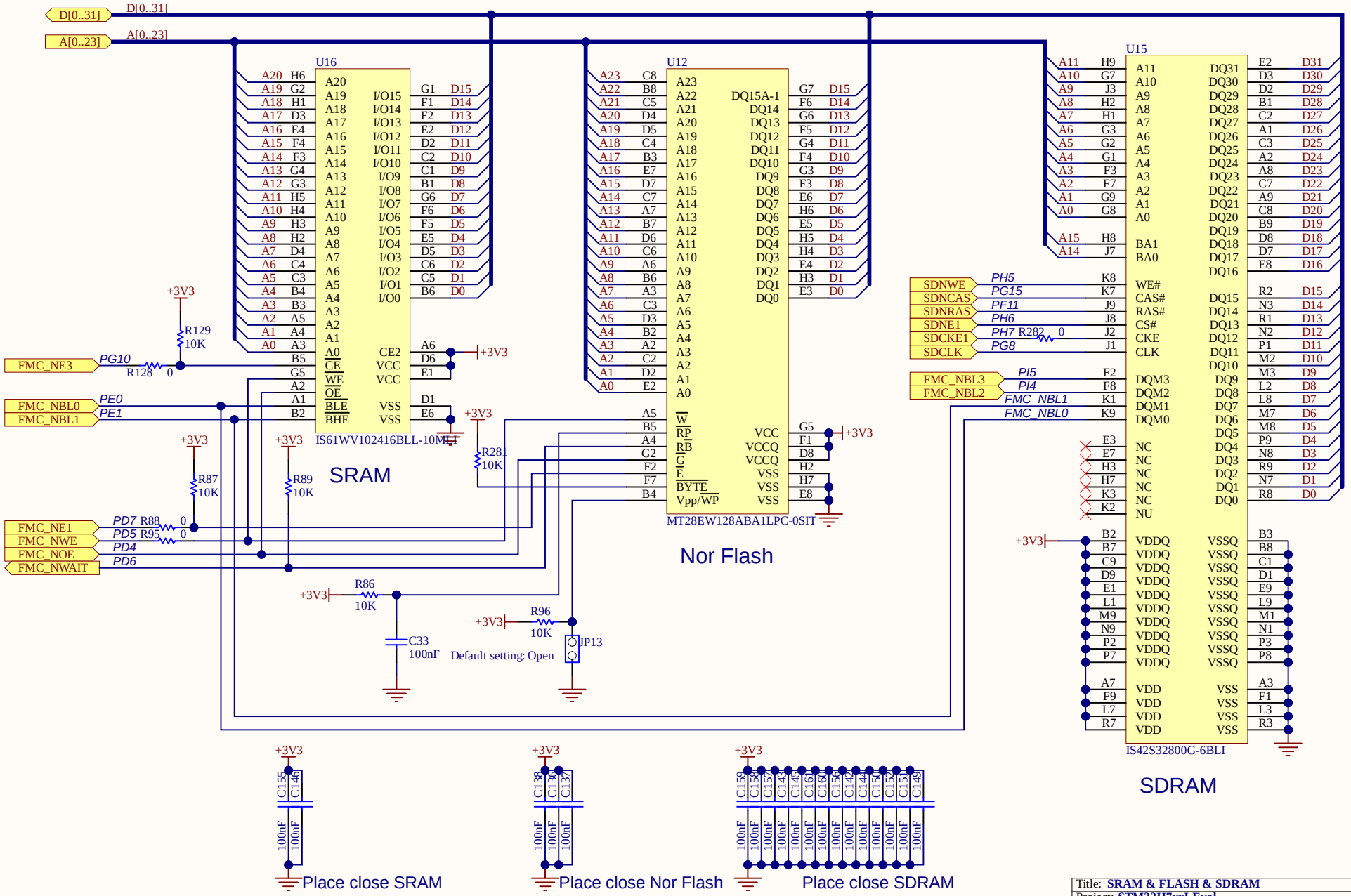


| | | |
|---|---|---|
| Title: **SRAM & FLASH & SDRAM** | | |
| Project: **STM32H7xxI-Eval** | | |
| Variant: H757 | | |
| Revision: E -02 | | Reference: MB1246 |
| Size: A4 | Date: 13/02/2019 | Sheet: 5 of 18 |

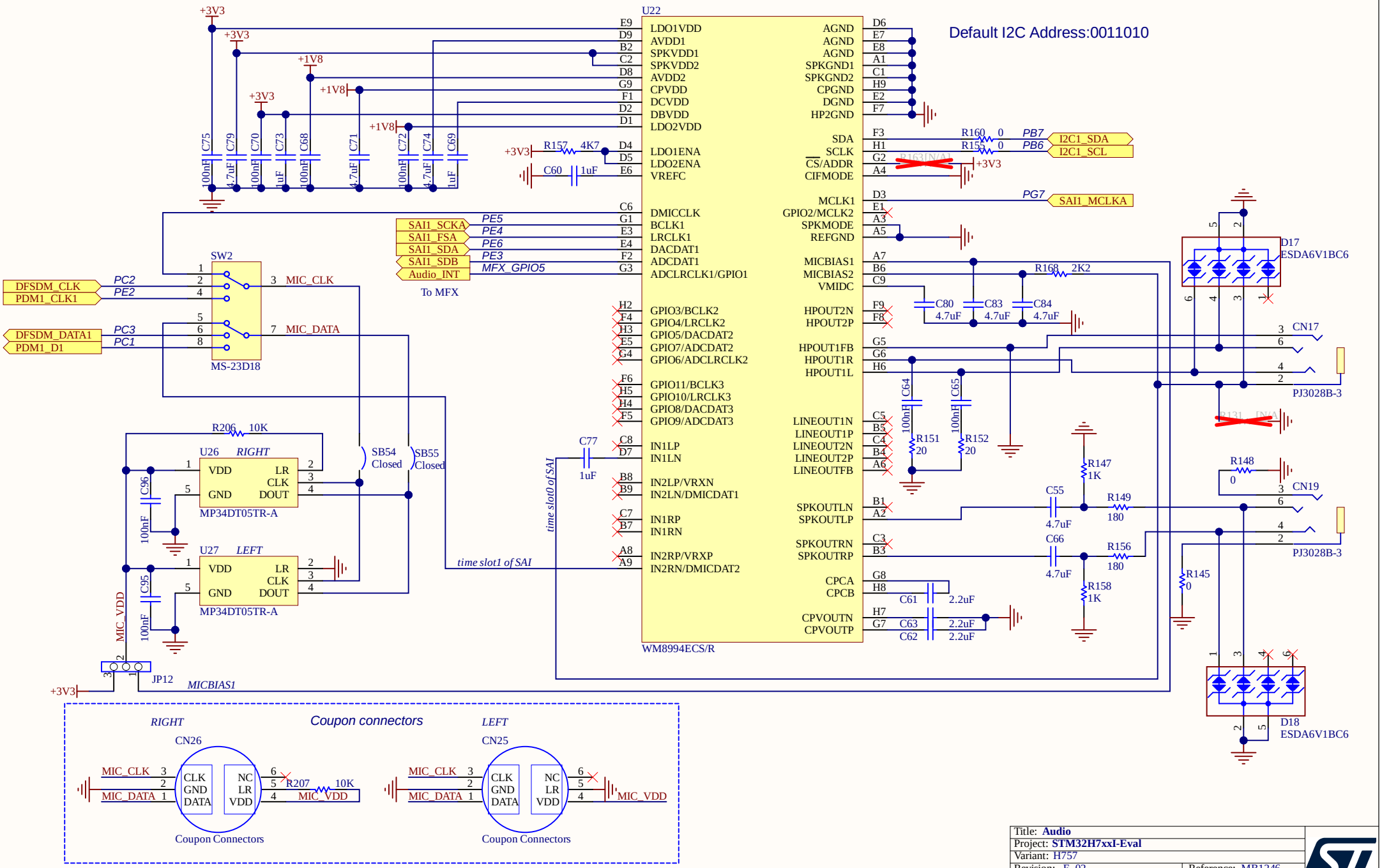


| | | |
|---|---|---|
| Title: **Audio** | | |
| Project: **STM32H7xxI-Eval** | | |
| Variant: H757 | | |
| Revision: E -02 | | Reference: MB1246 |
| Size: A4 | Date: 13/02/2019 | Sheet: 6 of 18 |

## DSI LCD

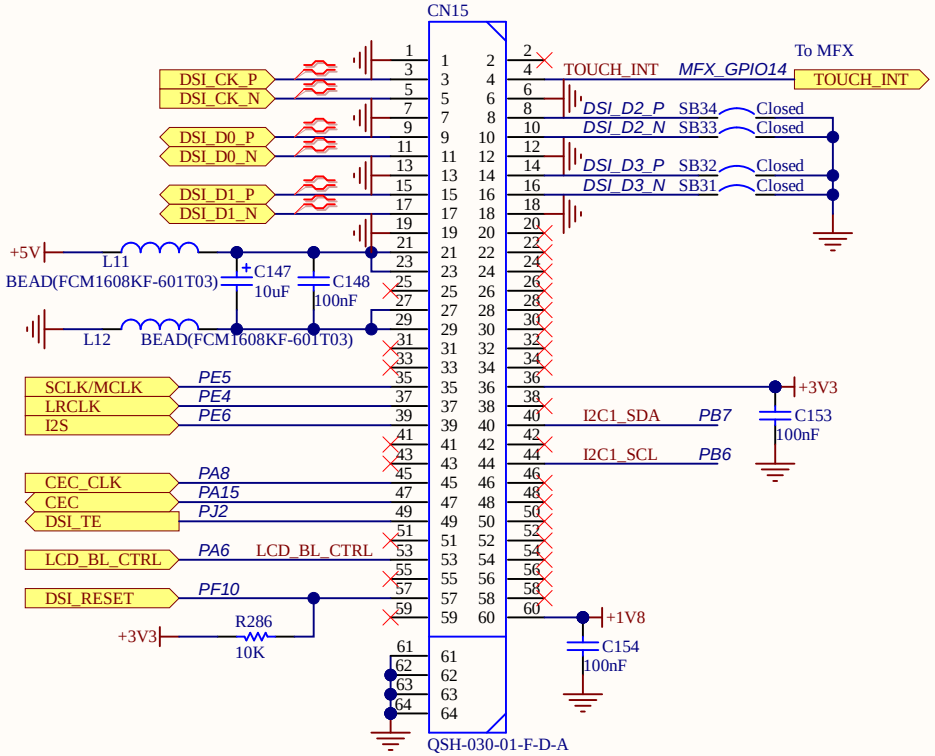


*Removed for STM32H7x3*

## RGB LCD

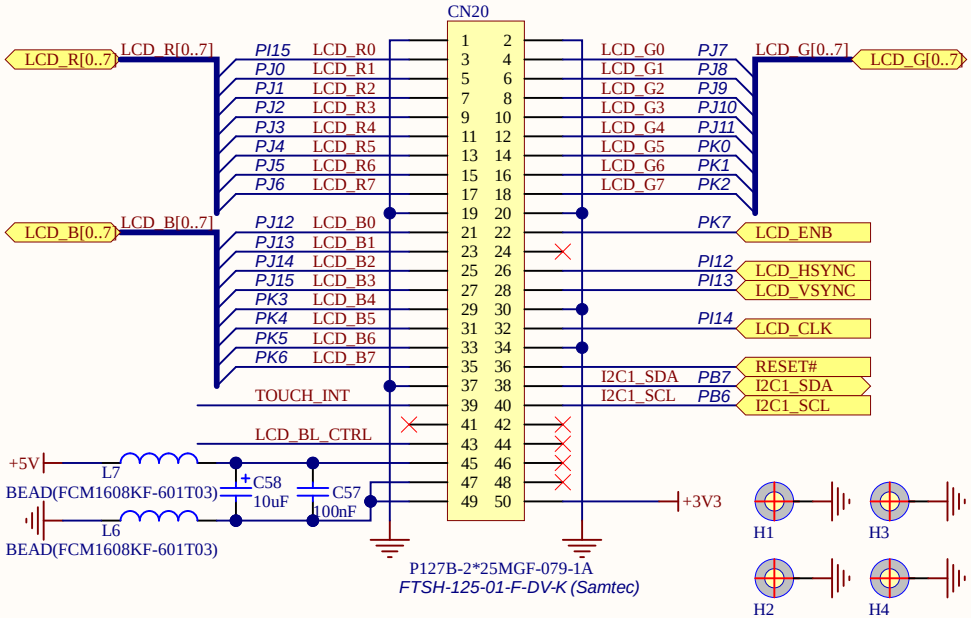


## I2C Connector

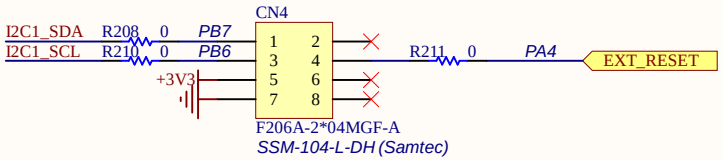


| | | |
|---|---|---|
| Title: **LCD Connectors** | | |
| Project: **STM32H7xxI-Eval** | | |
| Variant: H757 | | |
| Revision: E -02 | | Reference: MB1246 |
| Size: A4 | Date: 13/02/2019 | Sheet: 7 of 18 |

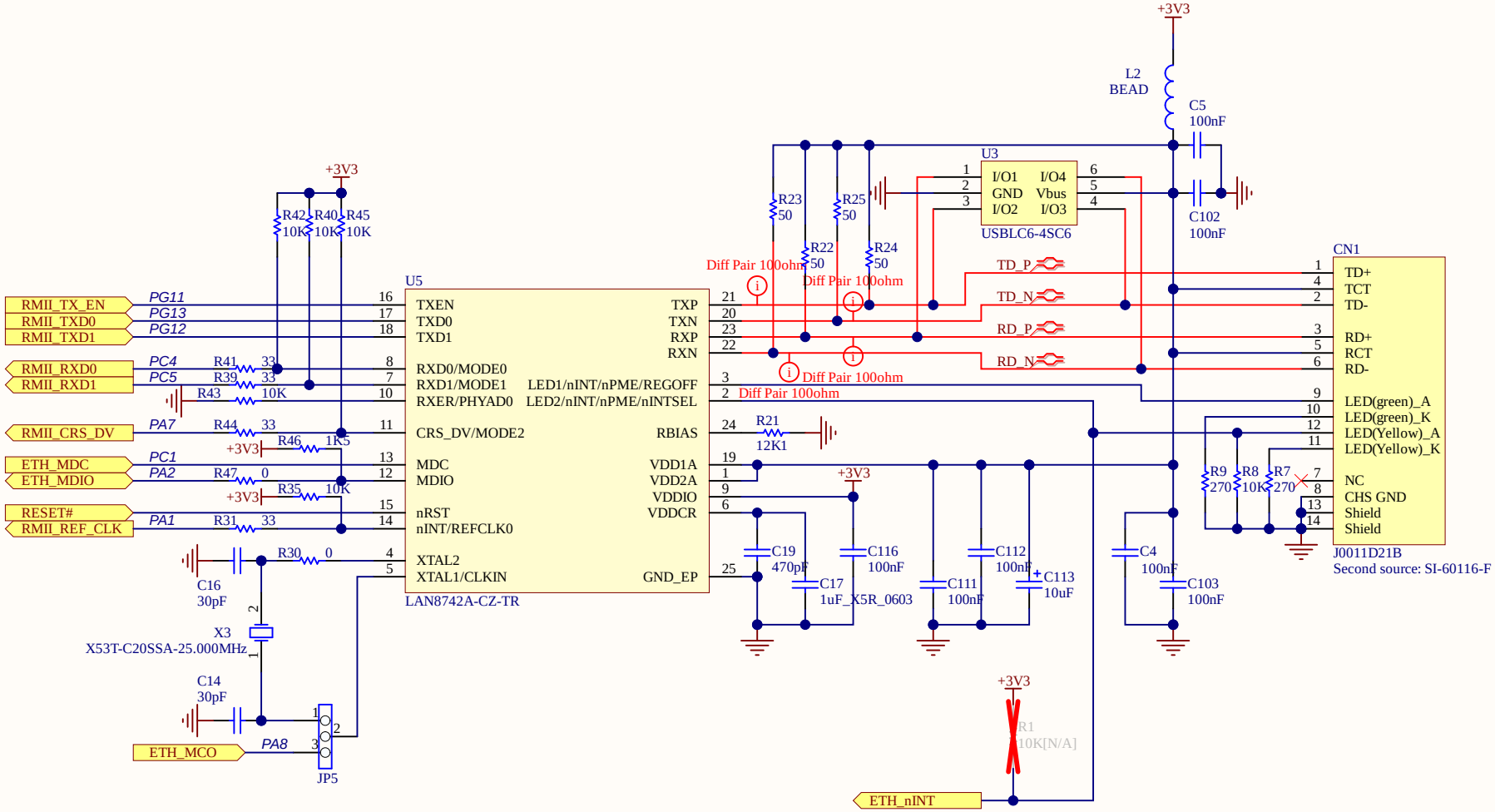


| | | |
|---|---|---|
| Title: **Ethernet** | | |
| Project: **STM32H7xxI-Eval** | | |
| Variant: H757 | | |
| Revision: E -02 | | Reference: MB1246 |
| Size: A4 | Date: 13/02/2019 | Sheet: 8 of 18 |

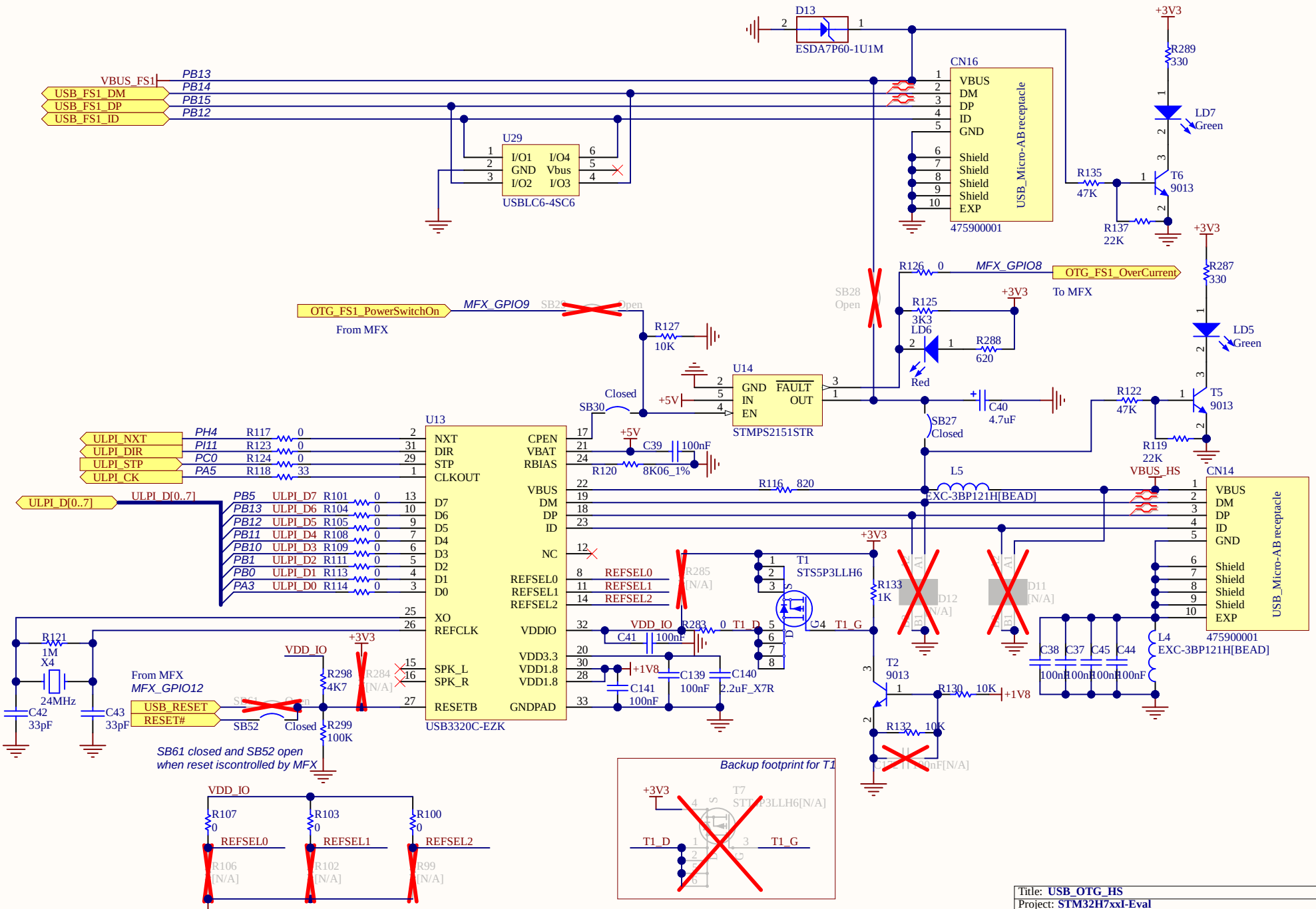


| | | |
|---|---|---|
| Title: **USB_OTG_HS** | | |
| Project: **STM32H7xxI-Eval** | | |
| Variant: H757 | | |
| Revision: E -02 | | Reference: MB1246 |
| Size: A4 | Date: 13/02/2019 | Sheet: 9 of 18 |

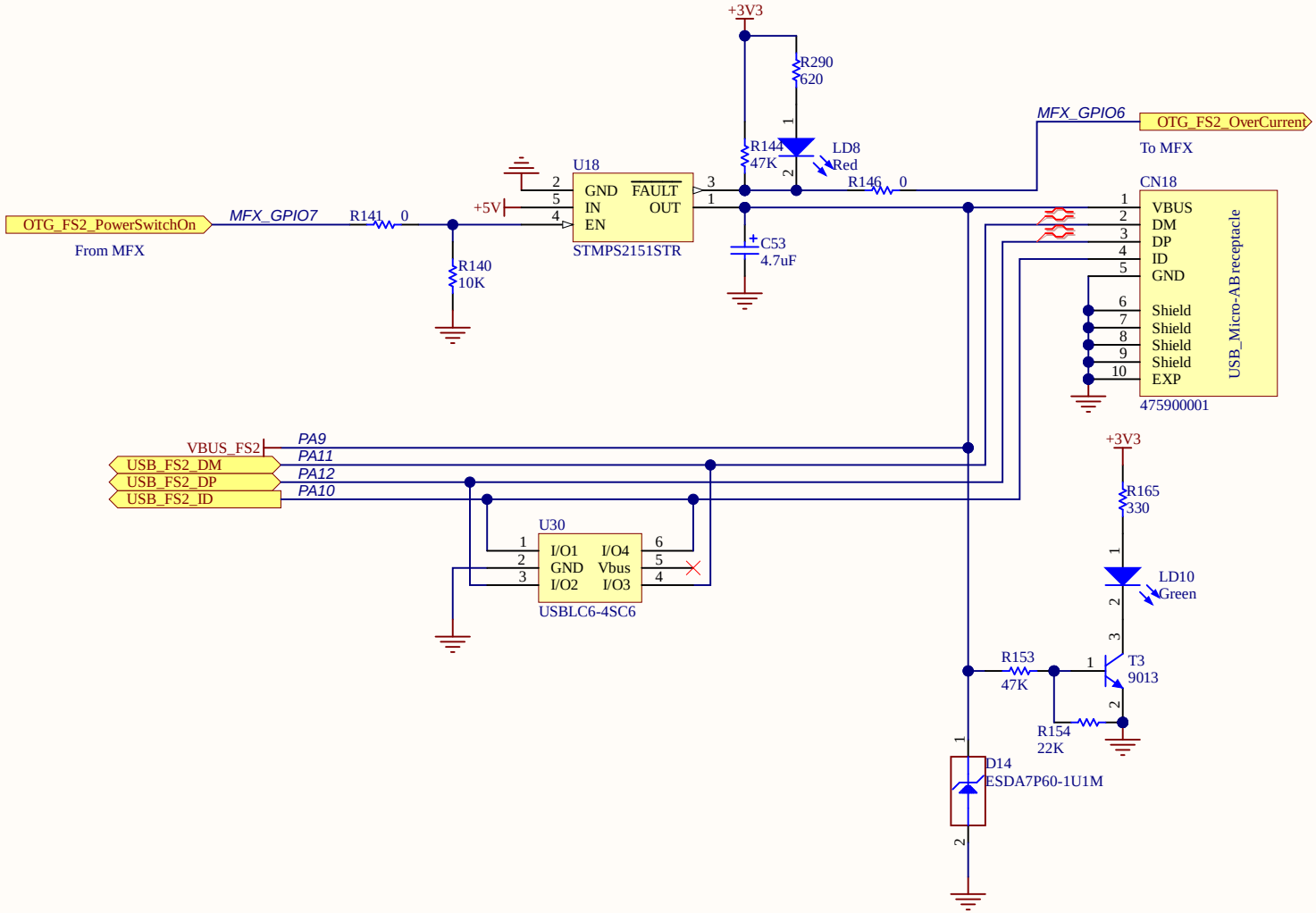


| | | |
|---|---|---|
| Title: **USB_OTG_FS** | | |
| Project: **STM32H7xxI-Eval** | | |
| Variant: H757 | | |
| Revision: E -02 | | Reference: MB1246 |
| Size: A4 | Date: 13/02/2019 | Sheet: 10 of 18 |

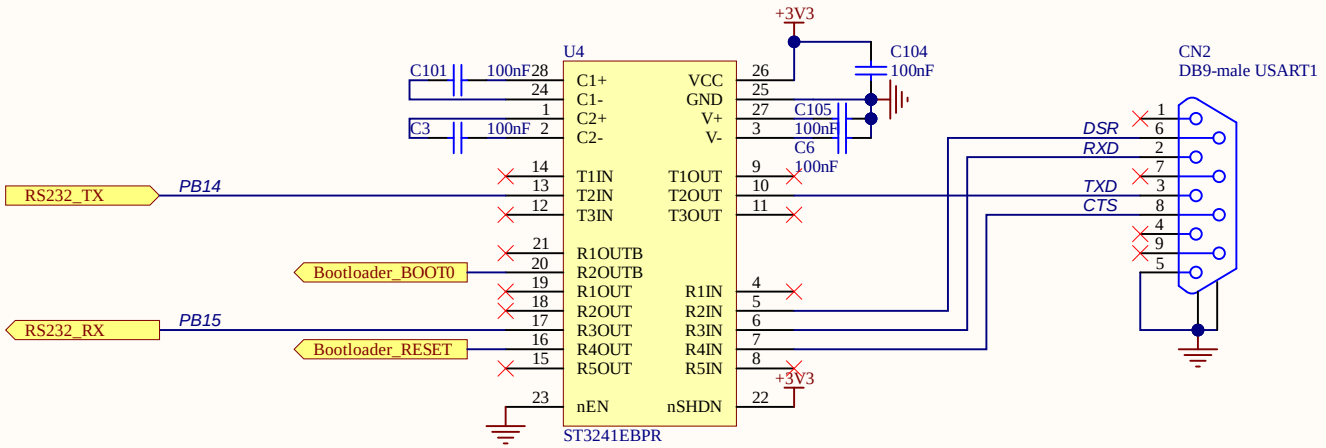


# RS232

| | | |
|---|---|---|
| Title: **RS232** | | |
| Project: **STM32H7xxI-Eval** | | |
| Variant: H757 | | |
| Revision: E -02 | | Reference: MB1246 |
| Size: A4 | Date: 13/02/2019 | Sheet: 11 of 18 |

## FDCAN

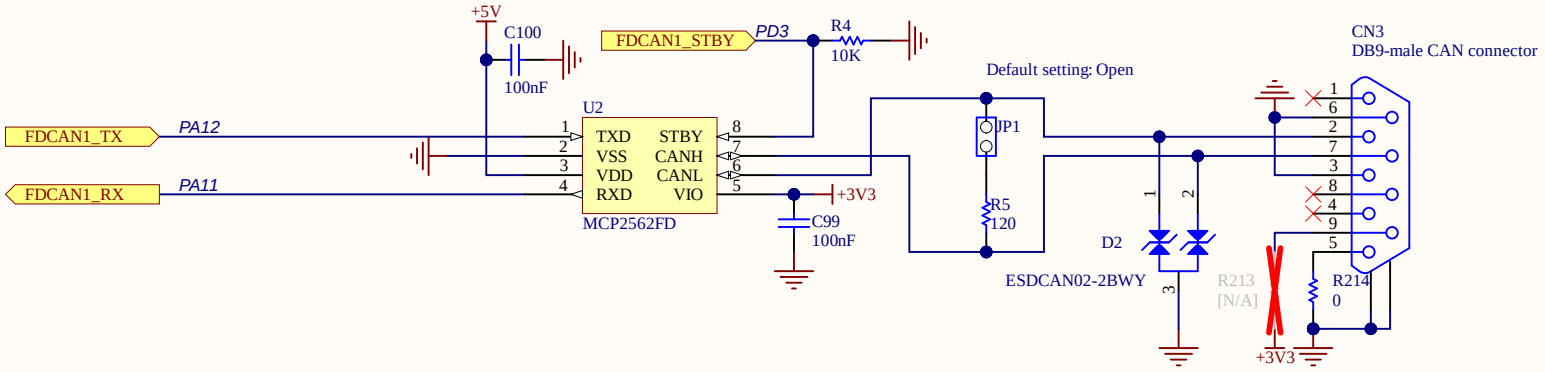


## Twin Quad SPI Flash

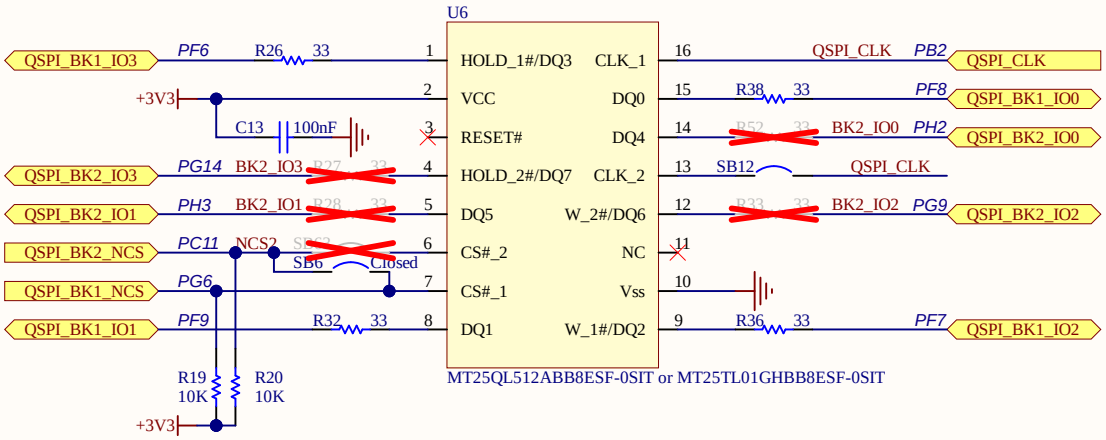


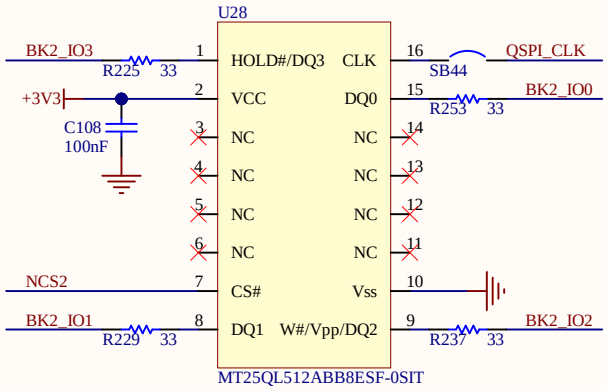


Removed when using One Twin Quad SPI Flash

Twin Quad SPI Flash configurations:

| | | | |
|---|---|---|---|
| Two Quad SPI Flash | U6:MT25QL512ABB8ESF-0SIT | U28:MT25QL512ABB8ESF-0SIT | R225/R229/R237/R253, SB44, C108 ONR27/R28/R33/R52, SB12/SB63 OFF |
| One Twin Quad SPI Flash | U6:MT25TL01GHBB8ESF-0SIT | U28:NA | R27/R28/R33/R52, SB12/SB63 ON R225/R229/R237/R253, SB44, C108 OFF |

| | | |
|---|---|---|
| Title: **FDCAN & QSPI** | | |
| Project: **STM32H7xxI-Eval** | | |
| Variant: H757 | | |
| Revision: E -02 | | Reference: MB1246 |
| Size: A4 | Date: 13/02/2019 | Sheet: 12 of 18 |

# MICRO SD 3.0 Card

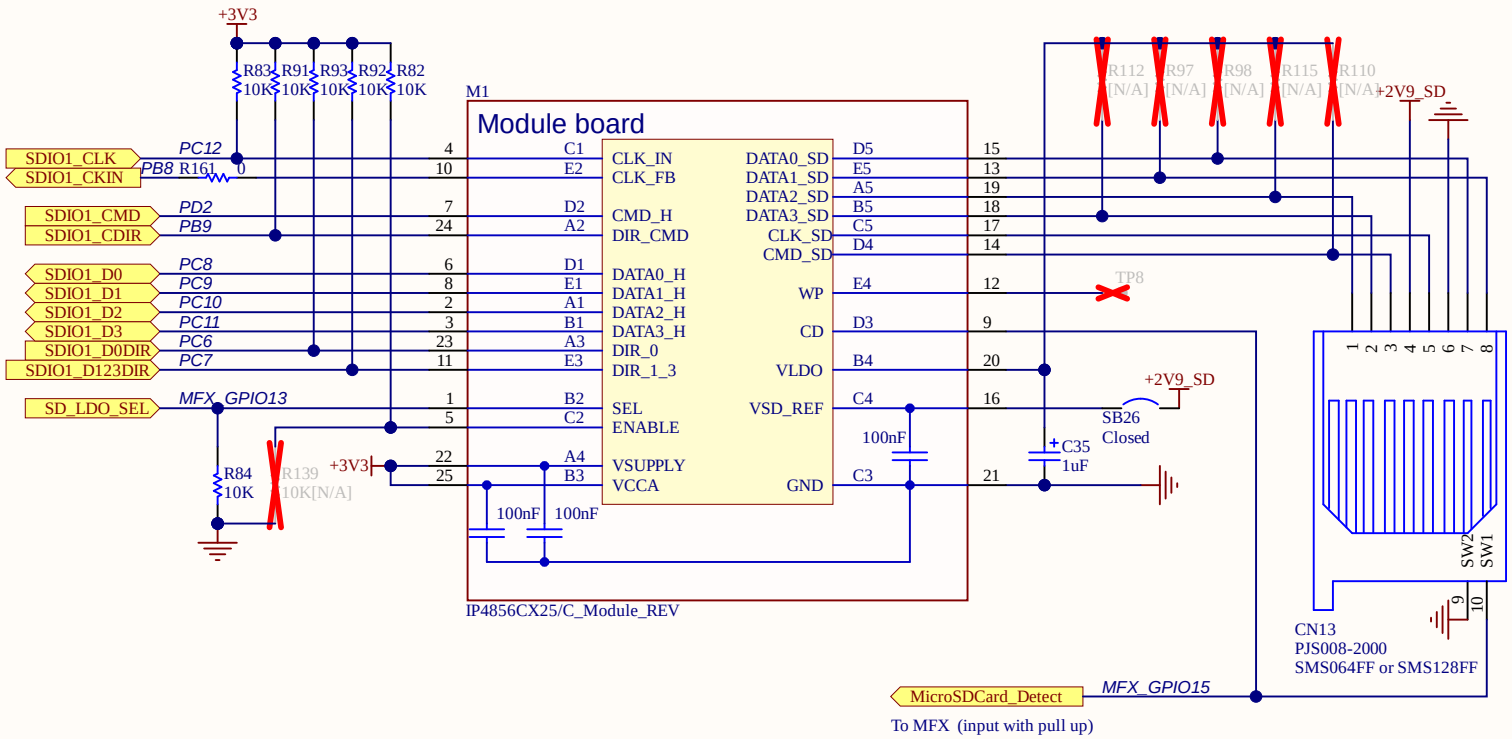


| | | |
|---|---|---|
| Title: **MICRO SD 3.0 Card** | | |
| Project: **STM32H7xxI-Eval** | | |
| Variant: H757 | | |
| Revision: E -02 | | Reference: MB1246 |
| Size: A4 | Date: 13/02/2019 | Sheet: 13 of 18 |

## Buttons

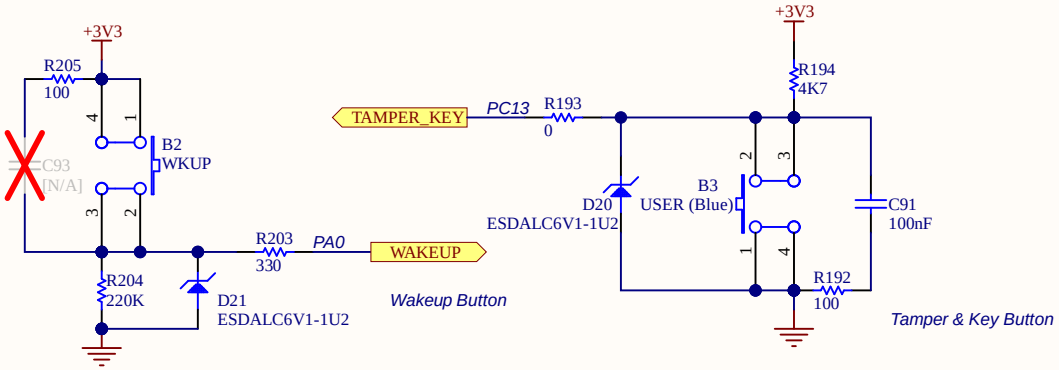


## Potentiometer

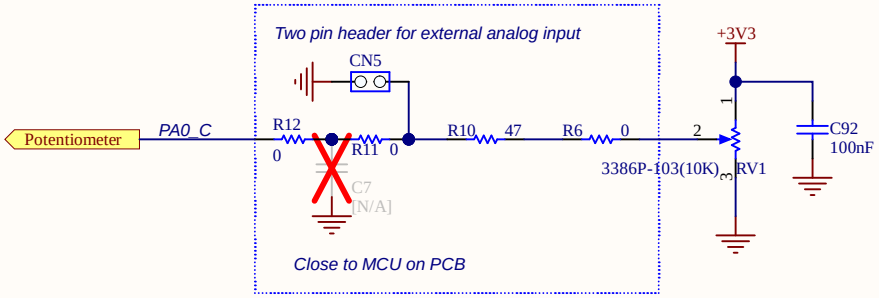


## Joystick

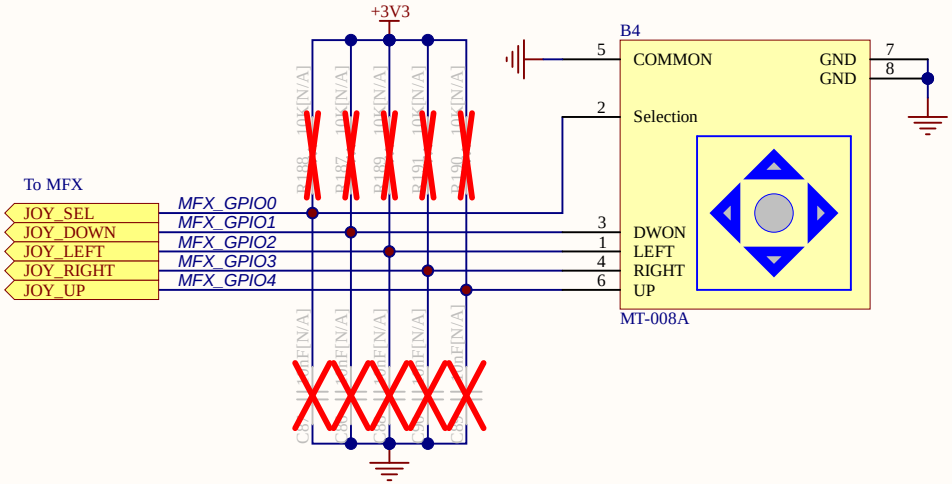


## LEDs

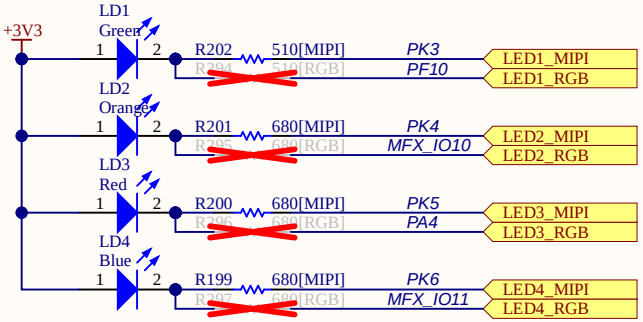


| | | |
|---|---|---|
| Title: **Peripherals** | | |
| Project: **STM32H7xxI-Eval** | | |
| Variant: H757 | | |
| Revision: E -02 | | Reference: MB1246 |
| Size: A4 | Date: 13/02/2019 | Sheet: 14 of 18 |

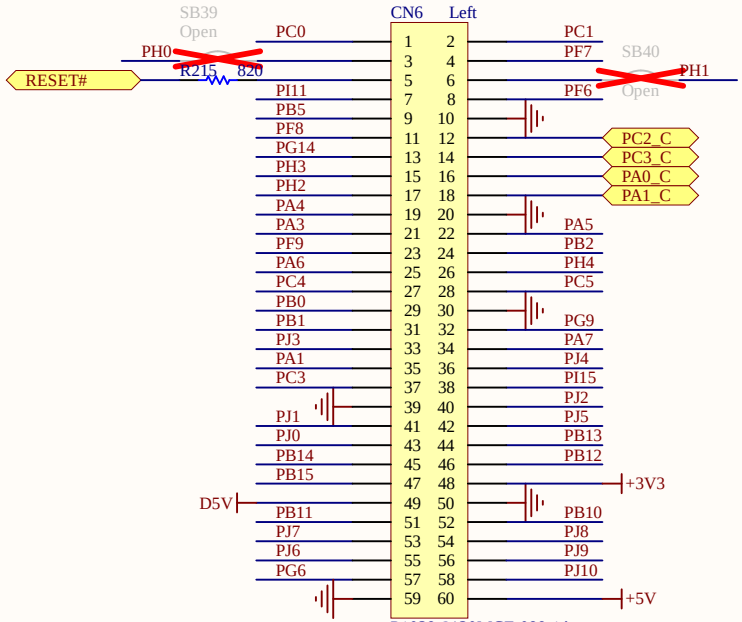


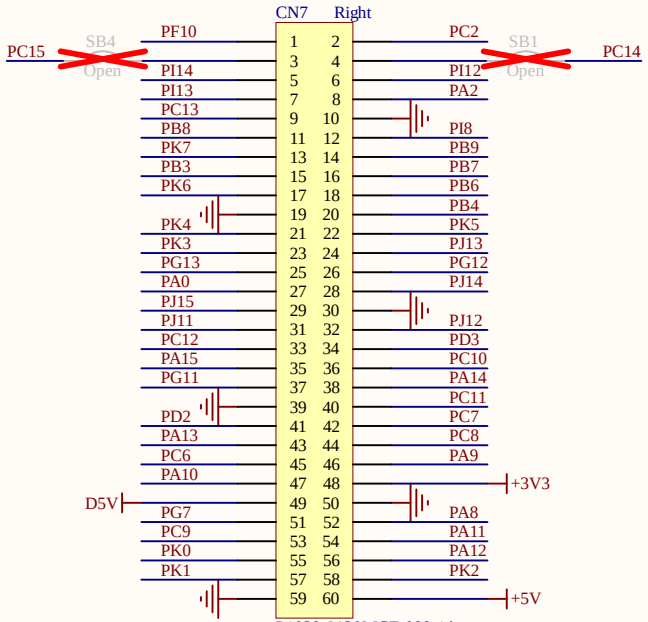


## Place close Memory

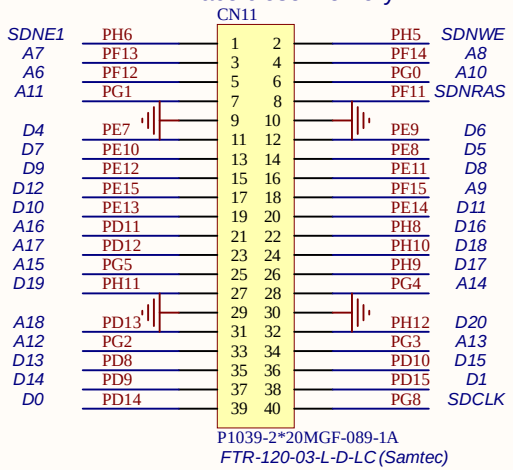


## Place close Memory

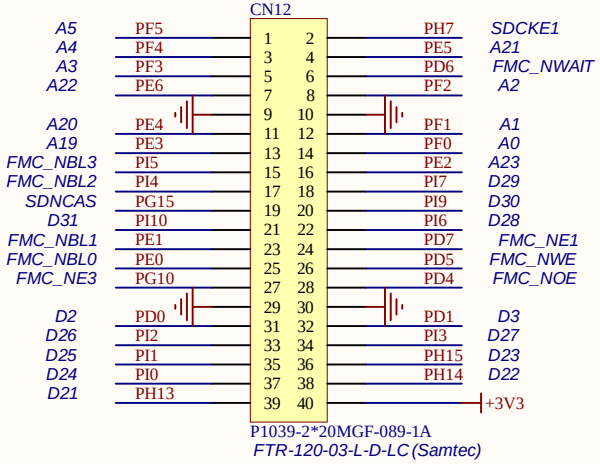


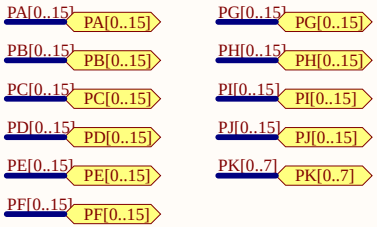


| | | |
|---|---|---|
| Title: **Extension Connectors** | | |
| Project: **STM32H7xxI-Eval** | | |
| Variant: H757 | | |
| Revision: E -02 | | Reference: MB1246 |
| Size: A4 | Date: 13/02/2019 | Sheet: 15 of 18 |

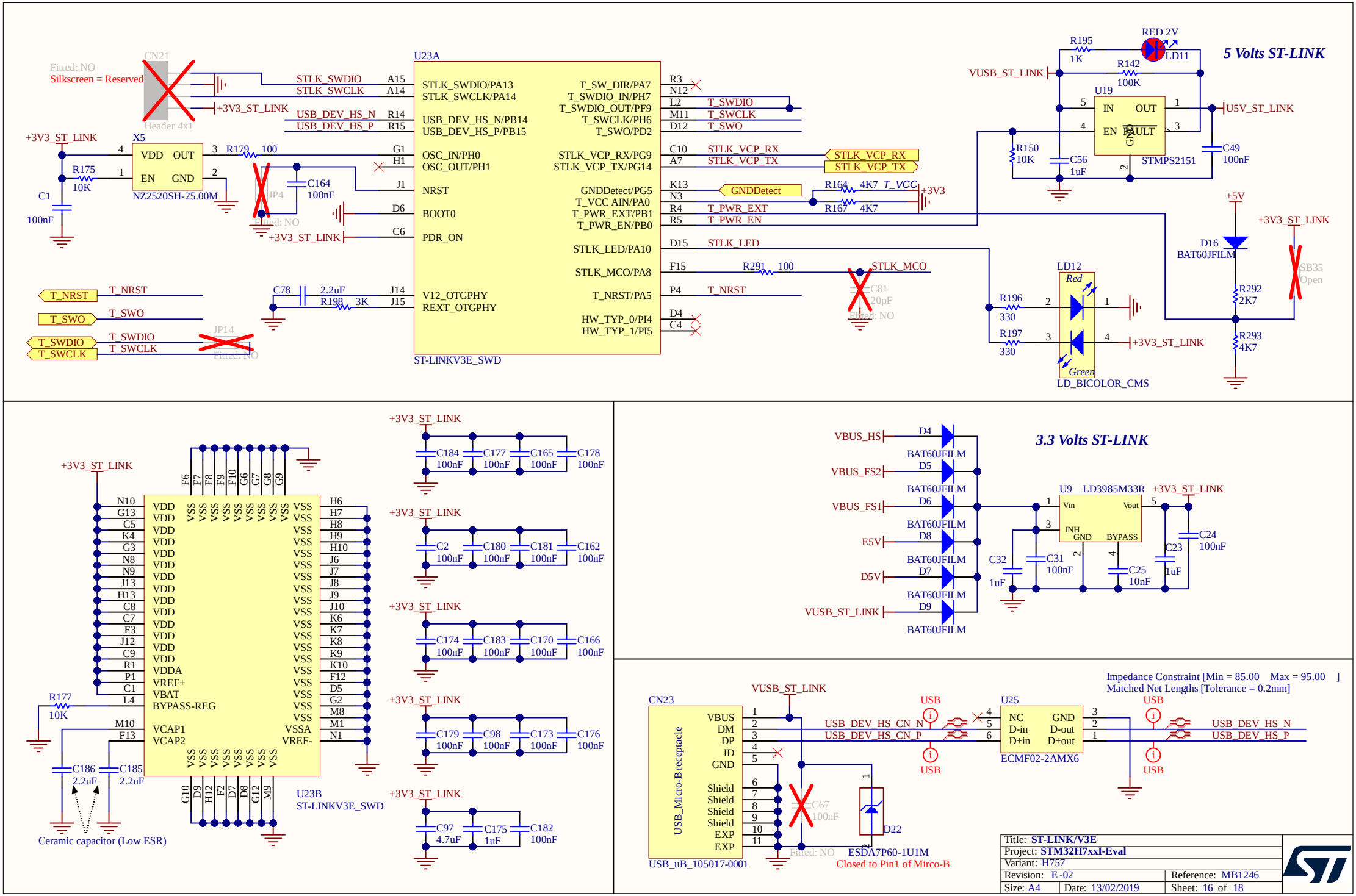
5 Volts ST-LINK
3.3 Volts ST-LINK
U23A
ST-LINKV3E_SWD
U23B
ST-LINKV3E_SWD
CN21
Header 4x1
Fitted: NO
Silkscreen = Reserved
X5
NZ2520SH-25.00M
JP4
JP14
U19
STMPS2151
LD11
RED 2V
LD12
LD_BICOLOR_CMS
D16
BAT60JFILM
SB35
Open
U9
LD3985M33R
CN23
USB_Micro-Breeceptacle
USB_uB_105017-0001
U25
ECMF02-2AMX6
D22
ESDA7P60-1U1M
Closed to Pin1 of Mirco-B
Impedance Constraint [Min = 85.00 Max = 95.00 ]
Matched Net Lengths [Tolerance = 0.2mm]
Ceramic capacitor (Low ESR)
Title: ST-LINK/V3E
Project: STM32H7xxI-Eval
Variant: H757
Revision: E -02
Reference: MB1246
Size: A4
Date: 13/02/2019
Sheet: 16 of 18

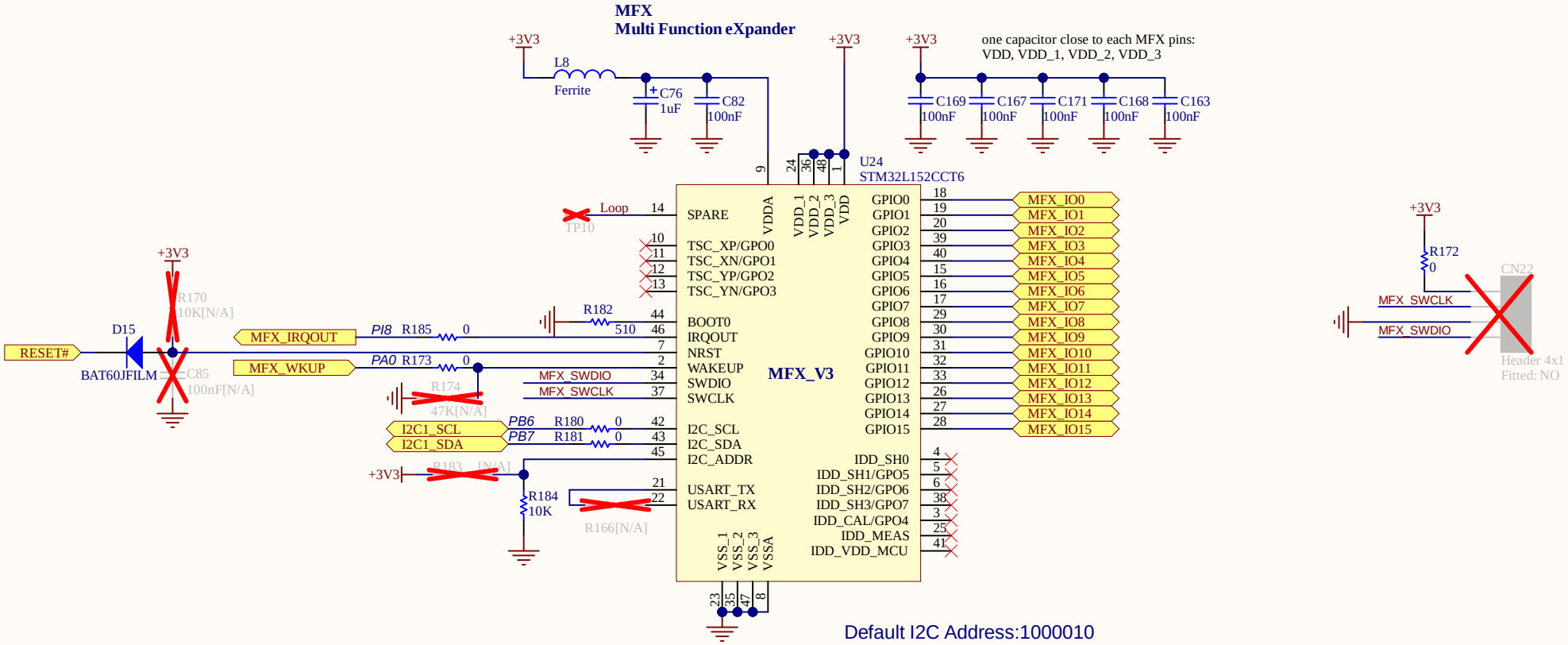


| | | |
|---|---|---|
| Title: **MFX** | | |
| Project: **STM32H7xxI-Eval** | | |
| Variant: H757 | | |
| Revision: E -02 | | Reference: MB1246 |
| Size: A4 | Date: 13/02/2019 | Sheet: 17 of 18 |

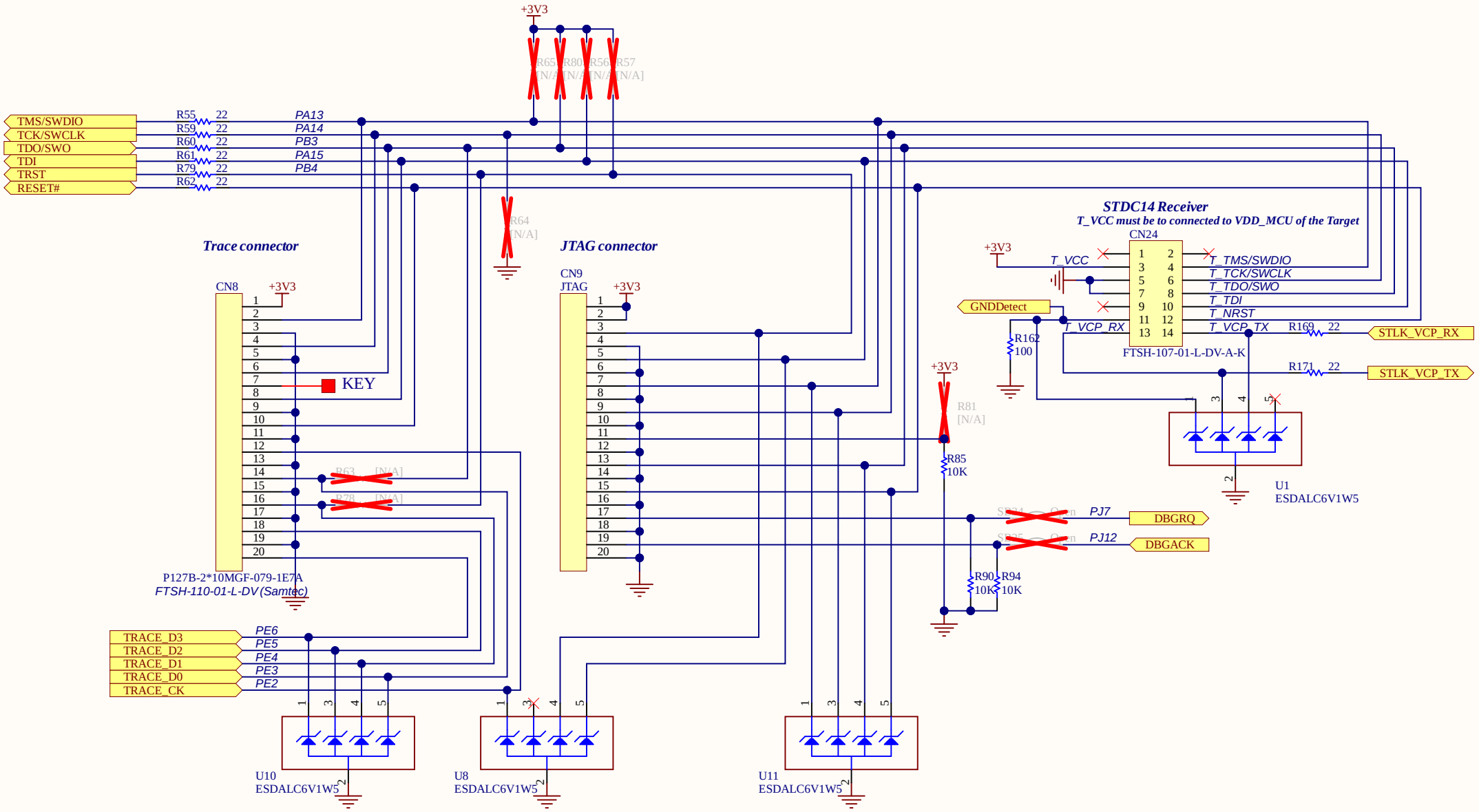


| | | |
|---|---|---|
| Title: **JTAG & Trace** | | |
| Project: **STM32H7xxI-Eval** | | |
| Variant: H757 | | |
| Revision: E -02 | | Reference: MB1246 |
| Size: A4 | Date: 13/02/2019 | Sheet: 18 of 18 |