STM32H7xxI-Eval

MB1246

Table of contents

Sheet 1: Project overview (this page)

Sheet 2: Top

Sheet 3: STM32 microcontroller I/Os

Sheet 4: STM32 microcontroller power

Sheet 5: Memory

Sheet 6: Audio

Sheet 7: LCD Connectors

Sheet 8: Ethernet

Sheet 9: USB OTG

Sheet 10: USB OTG FS

Sheet 11: RS232

Sheet 12: FDCAN & QSPI

Sheet 13: SD card

Sheet 14: Peripherals

Sheet 15: Extension connectors

Sheet 16: ST_Link_V3

Sheet 15: MFX

Sheet 15: JTAG & Trace

Legend

General comment such as function title, configuration, ...

Text to be added to silkscreen.

Warning text.

Notes to generate the board layout.

Open Platform License Agreement

The Open Platform License Agreement (“Agreement”) is a binding legal contract between you ("You") and STMicroelectronics International N.V. (“ST”), a company incorporated under the laws of the Netherlands acting for the purpose of this Agreement through its Swiss branch 39, Chemin du Champ des Filles, 1228 Plan-les-Ouates, Geneva, Switzerland.

By using the enclosed reference designs, schematics, PC board layouts, and documentation, in hardcopy or CAD tool file format (collectively, the “Reference Material”), You are agreeing to be bound by the terms and conditions of this Agreement. Do not use the Reference Material until You have read and agreed to this Agreement terms and conditions. The use of the Reference Material automatically implies the acceptance of the Agreement terms and conditions.

The complete Open Platform License Agreement can be found on www.st.com/opla.

U_Top
Top.SchDoc

Title: **Project overview**		
Project: **STM32H7xxI-Eval**		
Variant: H743		
Revision: E -02		Reference: MB1246
Size: A4	Date: 13/02/2019	Sheet: 1 of 18

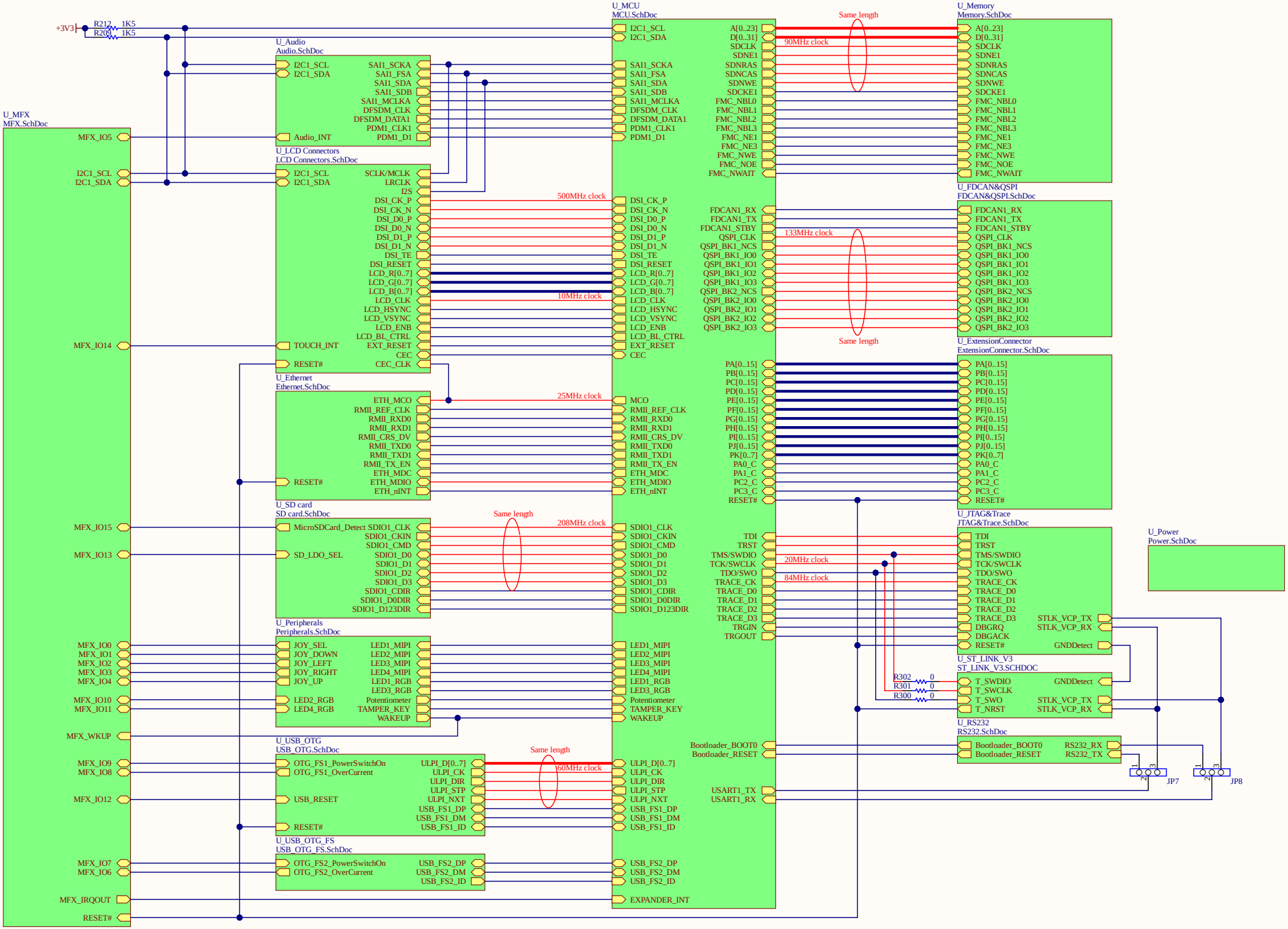

Title: **Top**		
Project: **STM32H7xxI-Eval**		
Variant: H743		
Revision: E-02		Reference: MB1246
Size: A3	Date: 13/02/2019	Sheet: 2 of 18

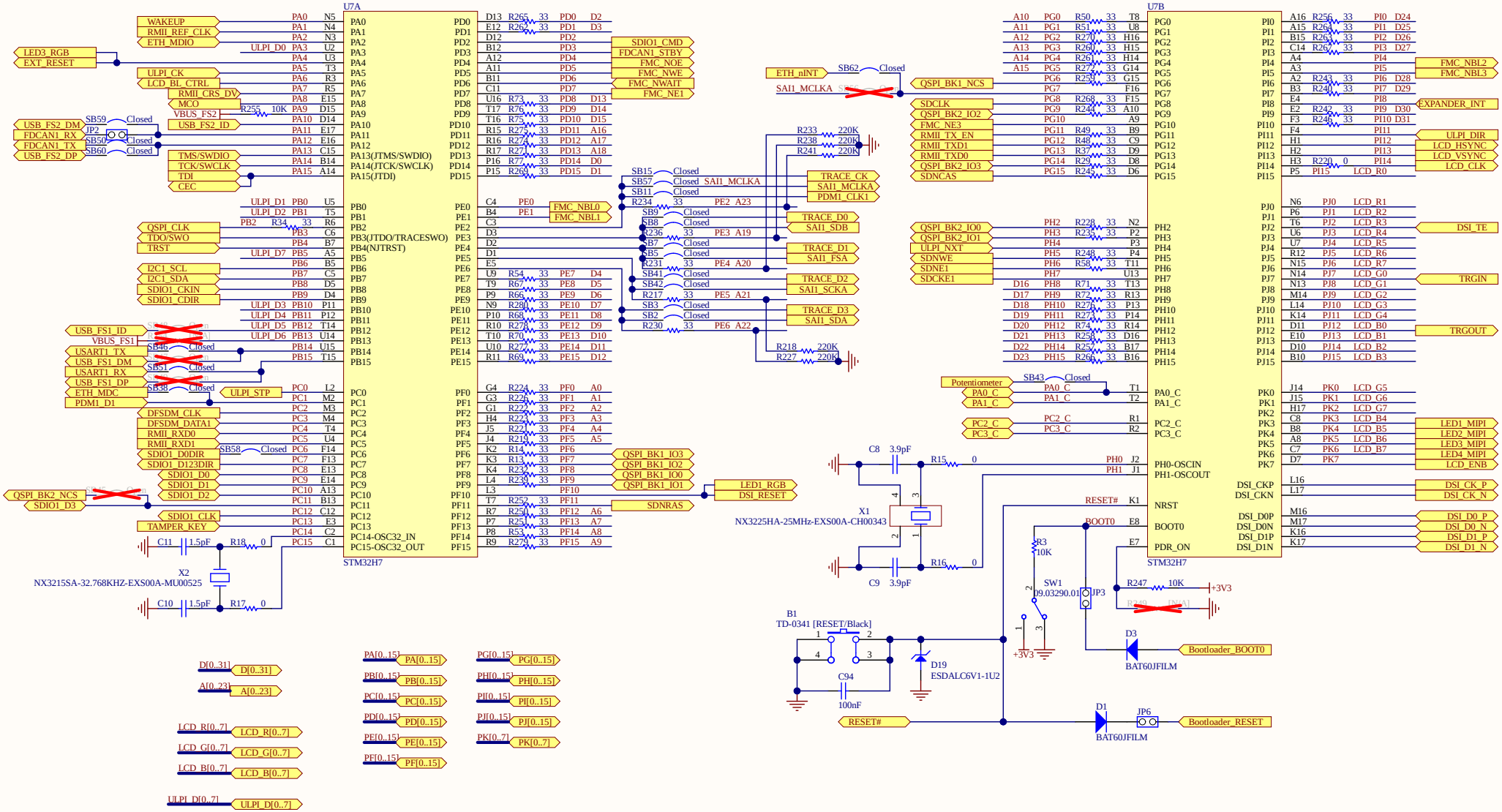

Title: **MCU**	
Project: **STM32H7xxI-Eval**	
Variant: H743	
Revision: E-02	Reference: MB1246
Size: A3	Date: 13/02/2019
	Sheet: 3 of 18

Power configurations:

Mode	Mount	Removed
LDO mode STM32H7x3 Default setting	SB13,SB23,SB18	SB14,SB16,SB20 SB10,SB17,SB53 L1
SMPS mode STM32H7x7 Default setting	SB14,SB20,SB10 SB53 L1	SB13,SB17,SB23 SB16,SB18
SMPS+LDO mode	SB13,SB23,SB10 SB53, L1	SB14,SB16,SB17 SB18,SB20

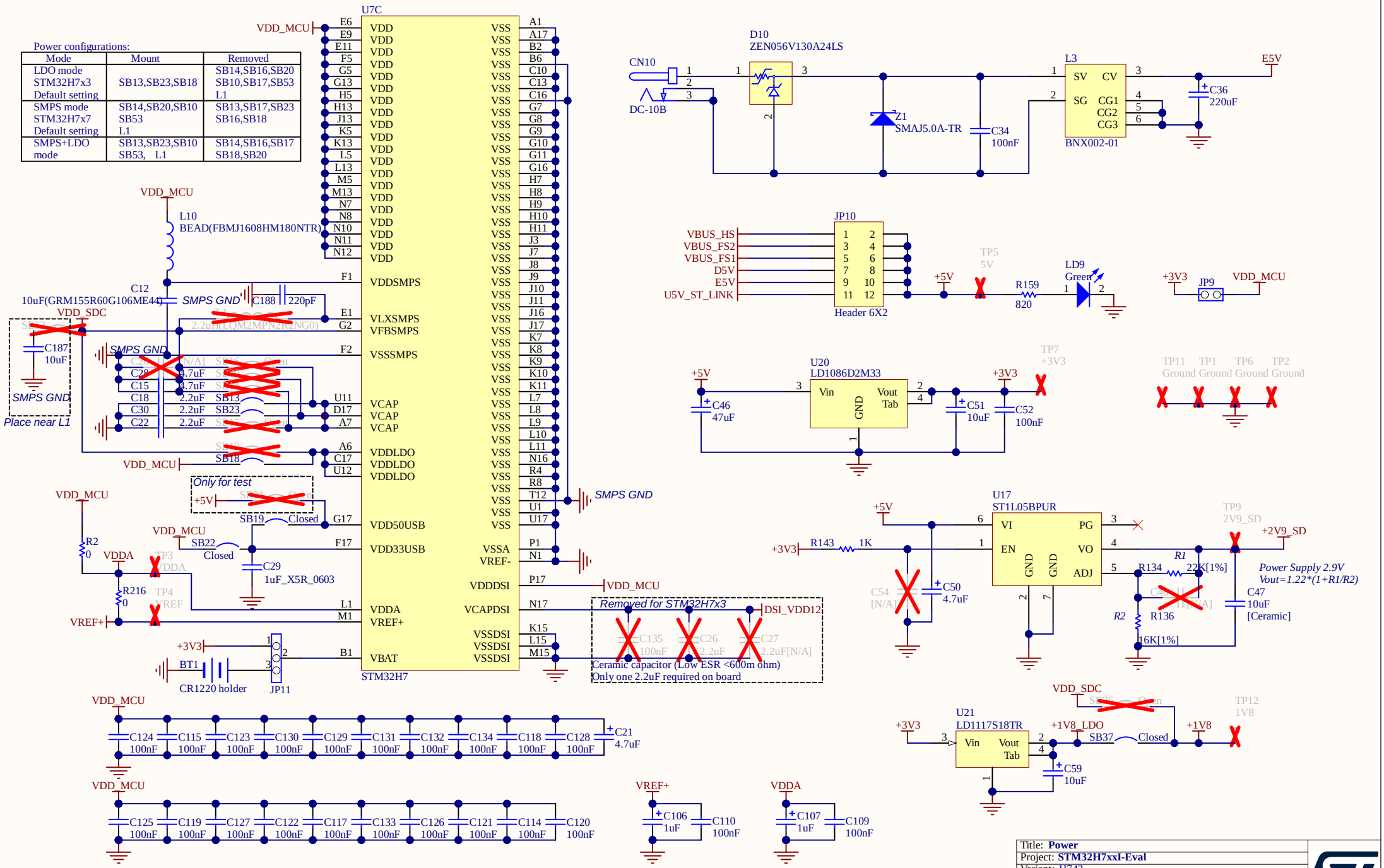

Title: **Power**	
Project: **STM32H7xxI-Eval**	
Variant: H743	
Revision: E -02	Reference: MB1246
Size: A4 Date: 13/02/2019	Sheet: 4 of 18

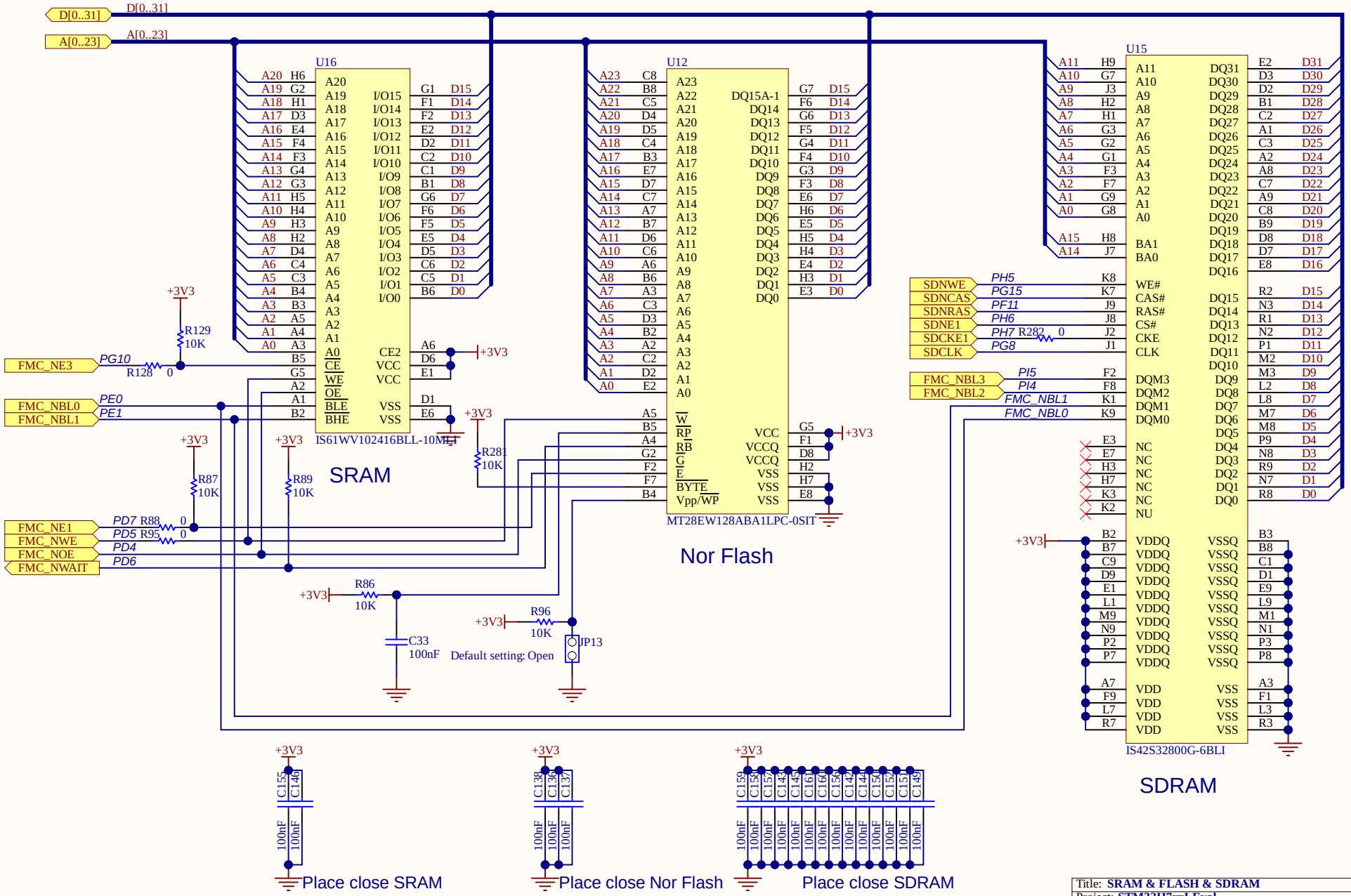

Title: **SRAM & FLASH & SDRAM**		
Project: **STM32H7xxI-Eval**		
Variant: H743		
Revision: E -02		Reference: MB1246
Size: A4	Date: 13/02/2019	Sheet: 5 of 18

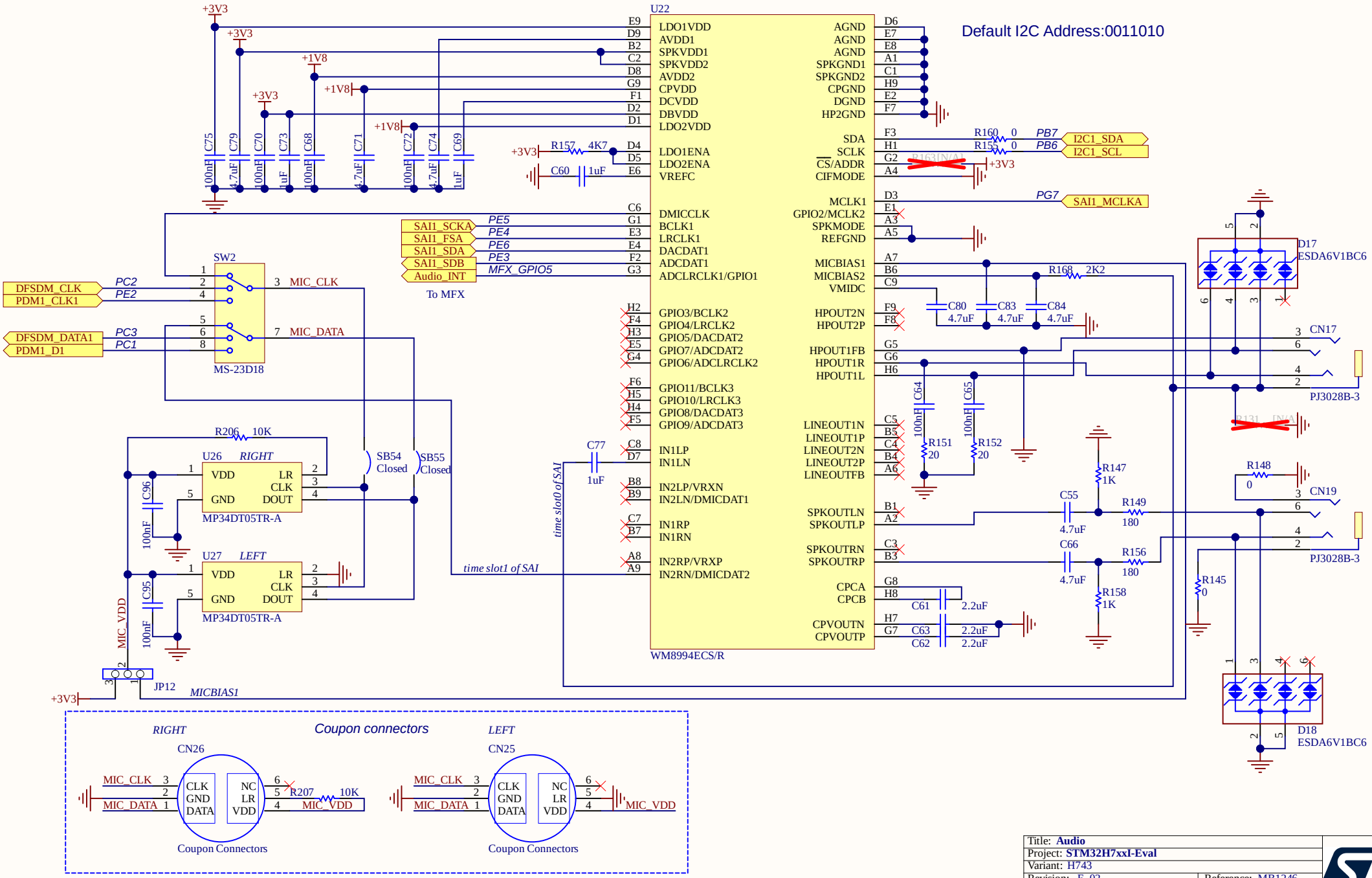

Title: **Audio**		
Project: **STM32H7xxI-Eval**		
Variant: H743		
Revision: E -02		Reference: MB1246
Size: A4	Date: 13/02/2019	Sheet: 6 of 18

DSI LCD

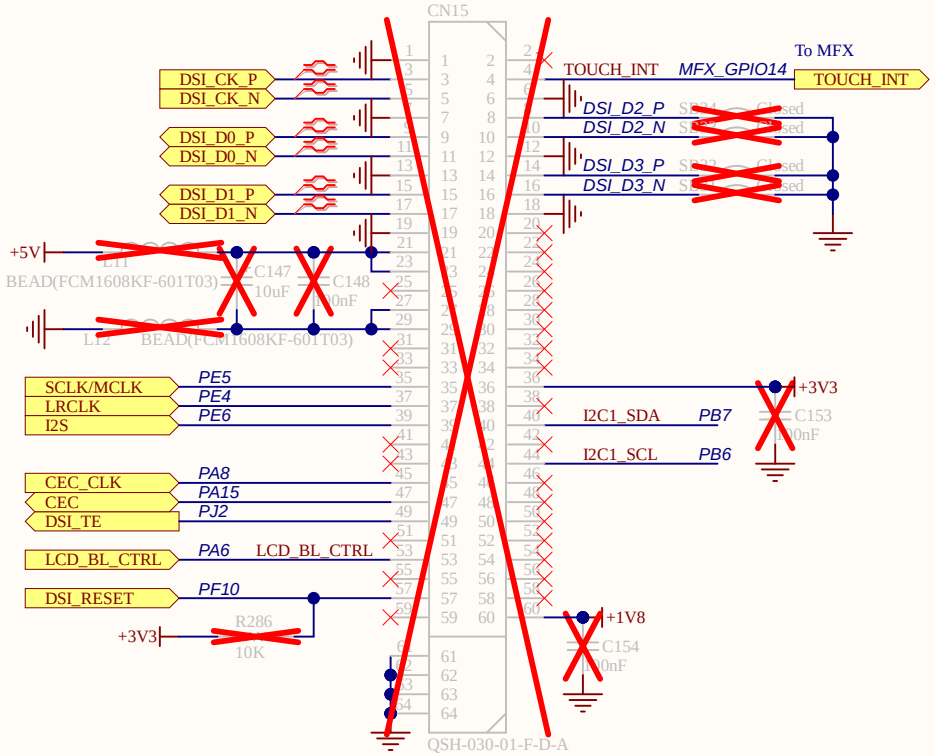

Removed for STM32H7x3

RGB LCD

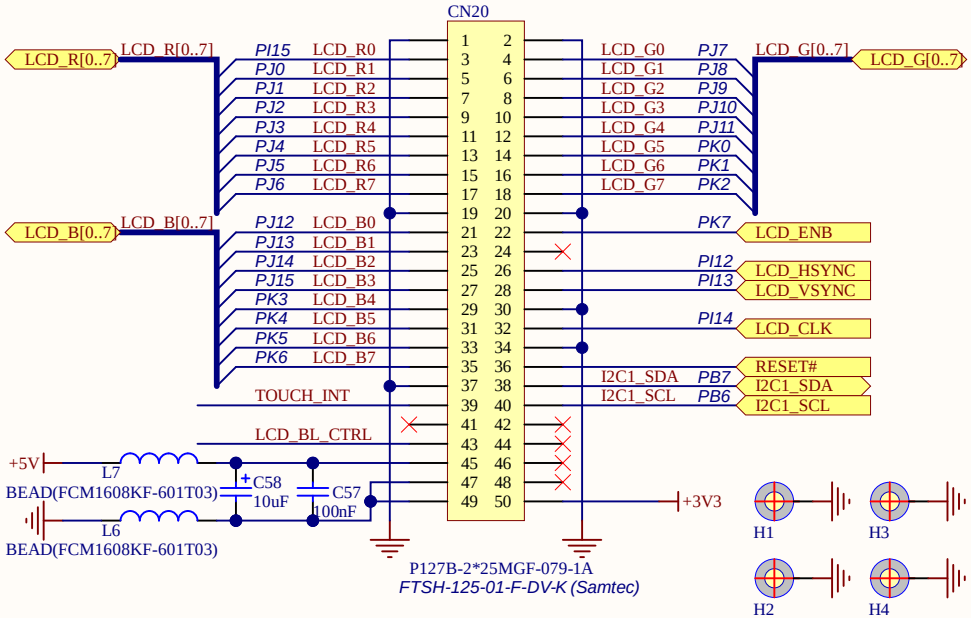

I2C Connector

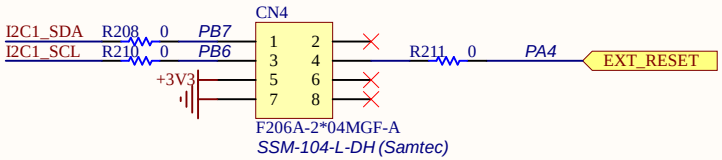

Title: **LCD Connectors**		
Project: **STM32H7xxI-Eval**		
Variant: H743		
Revision: E -02		Reference: MB1246
Size: A4	Date: 13/02/2019	Sheet: 7 of 18

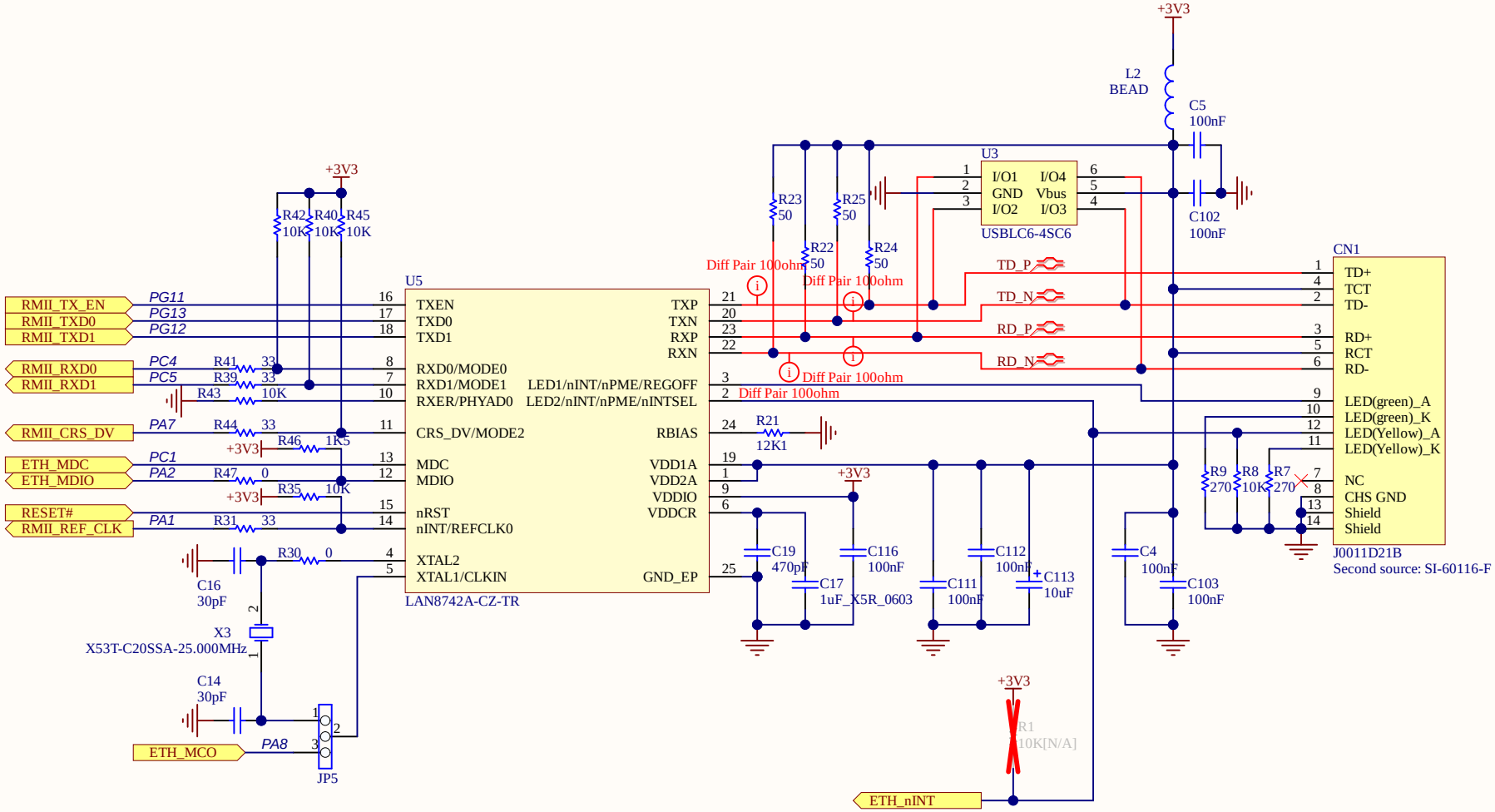

Title: **Ethernet**		
Project: **STM32H7xxI-Eval**		
Variant: H743		
Revision: E -02		Reference: MB1246
Size: A4	Date: 13/02/2019	Sheet: 8 of 18

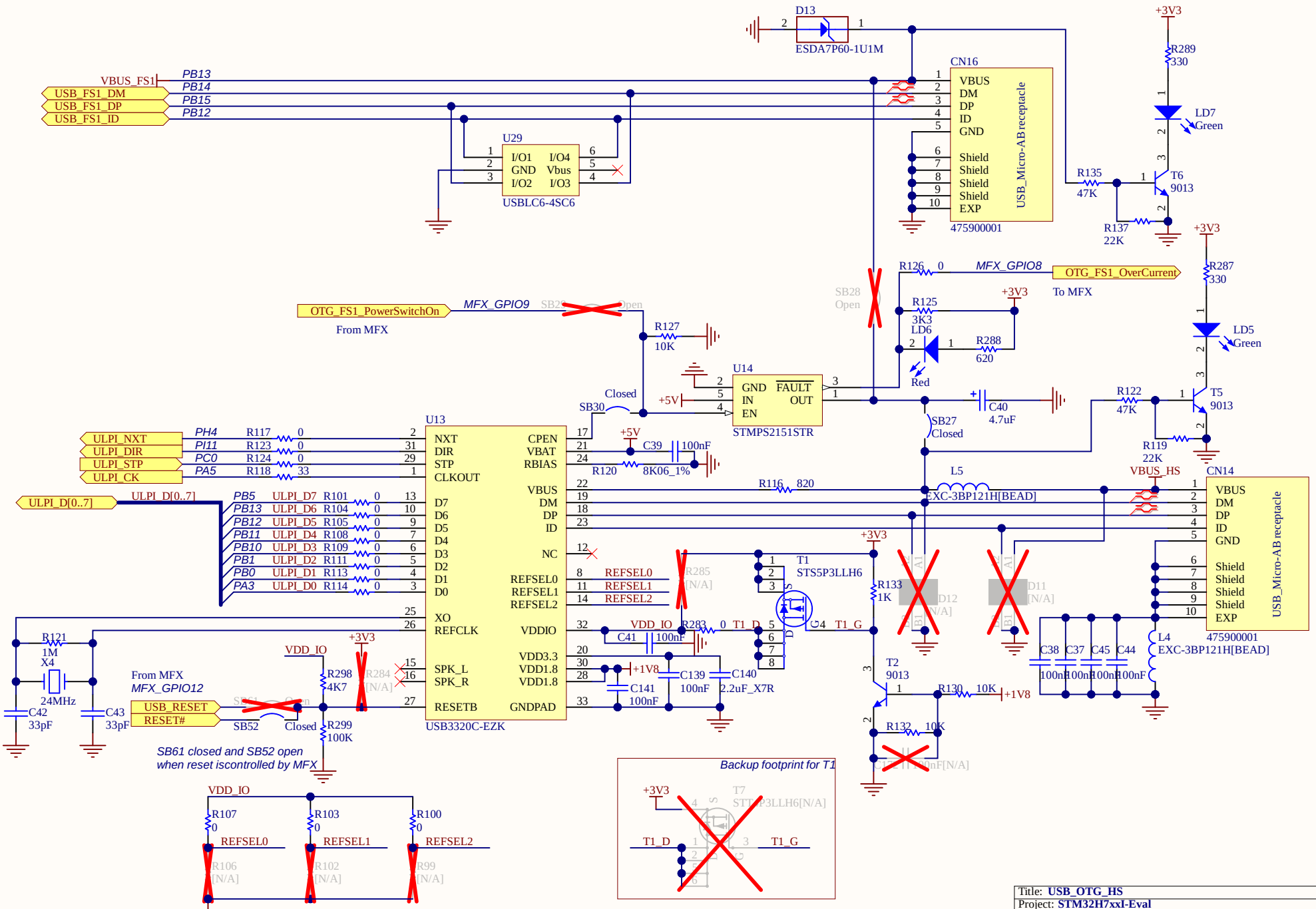
D13
ESDA7P60-1U1M
CN16
USB_Micro-AB receptacle
475900001
VBUS_FS1
USB_FS1_DM
USB_FS1_DP
USB_FS1_ID
PB13
PB14
PB15
PB12
U29
USBLC6-4SC6
+3V3
R289
330
LD7
Green
R135
47K
T6
9013
R137
22K
R287
330
LD5
Green
T5
9013
R122
47K
R119
22K
R126
0
MFX_GPIO8
OTG_FS1_OverCurrent
To MFX
SB28
Open
R125
3K3
LD6
Red
R288
620
OTG_FS1_PowerSwitchOn
From MFX
MFX_GPIO9
SB29
Open
R127
10K
U14
STMPS2151STR
SB30
Closed
+5V
C40
4.7uF
SB27
Closed
U13
USB3320C-EZK
ULPI_NXT
ULPI_DIR
ULPI_STP
ULPI_CK
ULPI_D[0..7]
PH4
PI11
PC0
PA5
R117
R123
R124
R118
C39
100nF
R120
8K06_1%
L5
EXC-3BP121H[BEAD]
R116
820
VBUS_HS
CN14
USB_Micro-AB receptacle
475900001
L4
EXC-3BP121H[BEAD]
C38
C37
C45
C44
100nF
REFSEL0
REFSEL1
REFSEL2
R285
[N/A]
T1
STS5P3LLH6
R133
1K
D12
[N/A]
D11
[N/A]
VDD_IO
R283
0
T1_D
T1_G
C41
100nF
C139
100nF
C140
2.2uF_X7R
C141
100nF
+1V8
T2
9013
R130
10K
R132
10K
R121
1M
X4
24MHz
C42
33pF
C43
33pF
From MFX
MFX_GPIO12
USB_RESET
RESET#
SB1
Open
SB52
Closed
R298
4K7
R284
[N/A]
R299
100K
SB61 closed and SB52 open
when reset iscontrolled by MFX
R107
0
R103
0
R100
0
R106
[N/A]
R102
[N/A]
R99
[N/A]
Backup footprint for T1
T7
STT[N/A]P3LLH6[N/A]
Title: USB_OTG_HS
Project: STM32H7xxI-Eval
Variant: H743
Revision: E -02
Reference: MB1246
Size: A4
Date: 13/02/2019
Sheet: 9 of 18

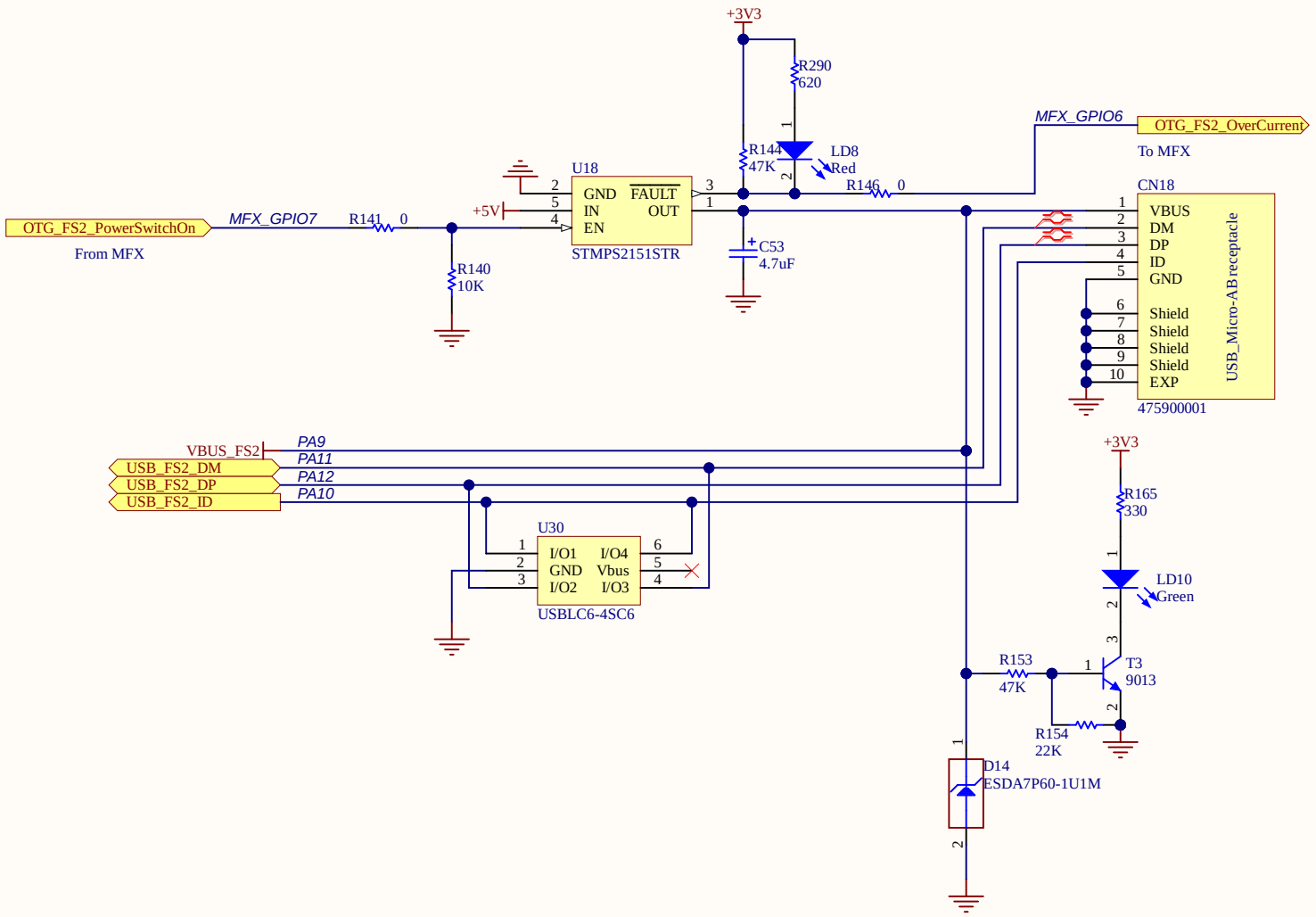

Title: **USB_OTG_FS**		
Project: **STM32H7xxI-Eval**		
Variant: H743		
Revision: E -02		Reference: MB1246
Size: A4	Date: 13/02/2019	Sheet: 10 of 18

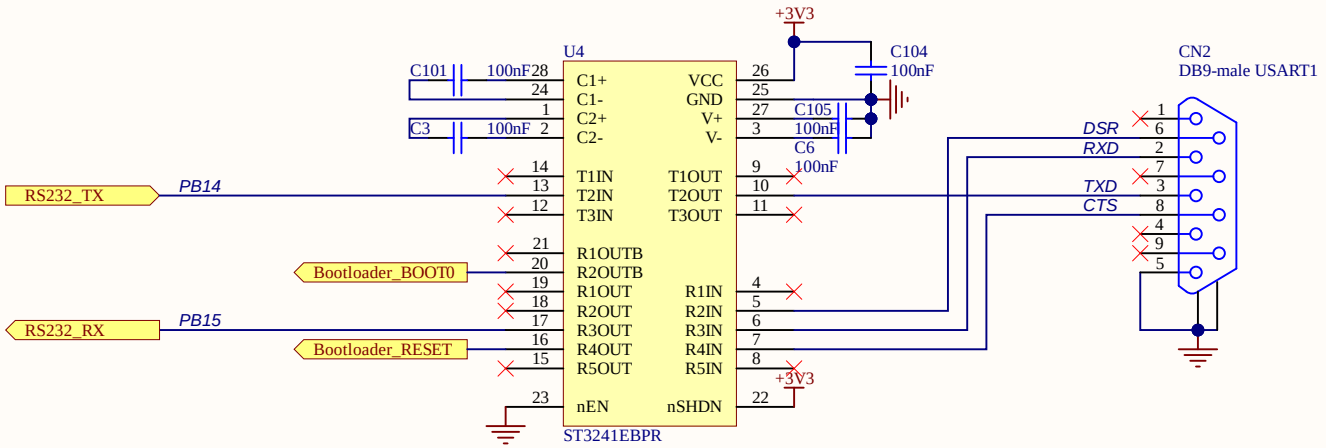

RS232

Title: **RS232**		
Project: **STM32H7xxI-Eval**		
Variant: H743		
Revision: E -02		Reference: MB1246
Size: A4	Date: 13/02/2019	Sheet: 11 of 18

FDCAN

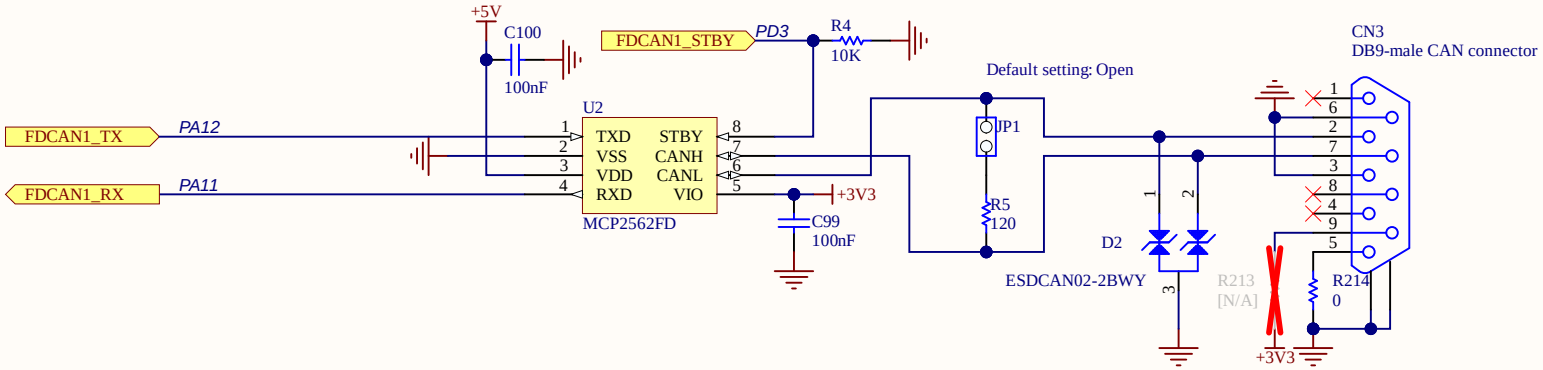

Twin Quad SPI Flash

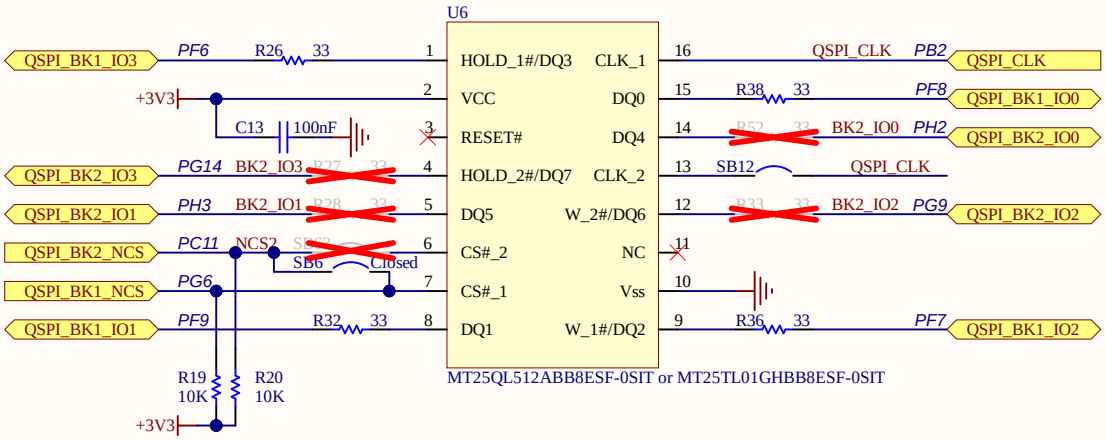

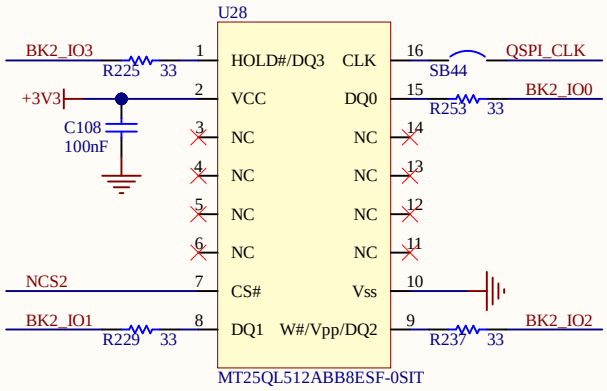

Removed when using One Twin Quad SPI Flash

Twin Quad SPI Flash configurations:

Two Quad SPI Flash	U6:MT25QL512ABB8ESF-0SIT	U28:MT25QL512ABB8ESF-0SIT	R225/R229/R237/R253, SB44, C108 ONR27/R28/R33/R52, SB12/SB63 OFF
One Twin Quad SPI Flash	U6:MT25TL01GHBB8ESF-0SIT	U28:NA	R27/R28/R33/R52, SB12/SB63 ON R225/R229/R237/R253, SB44, C108 OFF

Title: **FDCAN & QSPI**		
Project: **STM32H7xxI-Eval**		
Variant: H743		
Revision: E -02		Reference: MB1246
Size: A4	Date: 13/02/2019	Sheet: 12 of 18

MICRO SD 3.0 Card

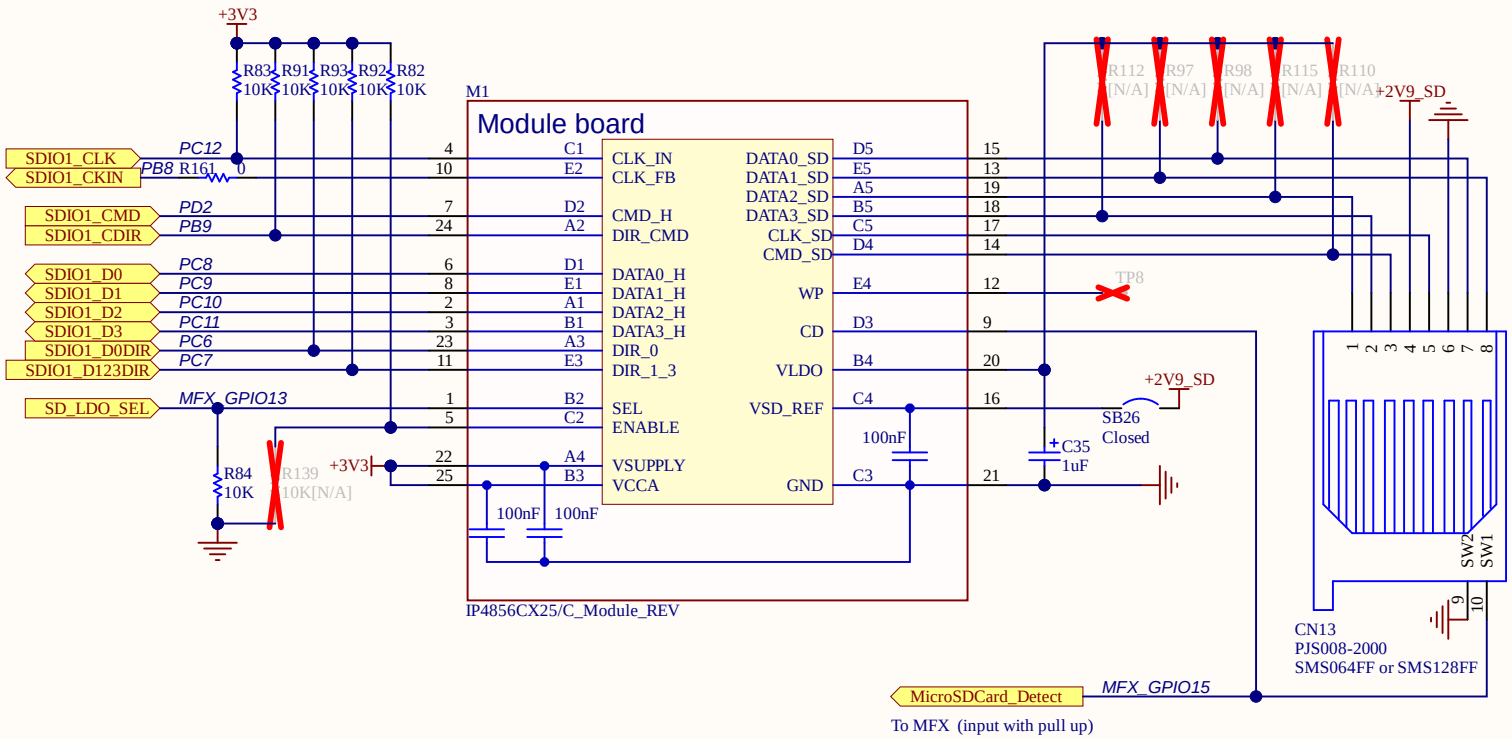

Title: **MICRO SD 3.0 Card**		
Project: **STM32H7xxI-Eval**		
Variant: H743		
Revision: E -02		Reference: MB1246
Size: A4	Date: 13/02/2019	Sheet: 13 of 18

Buttons

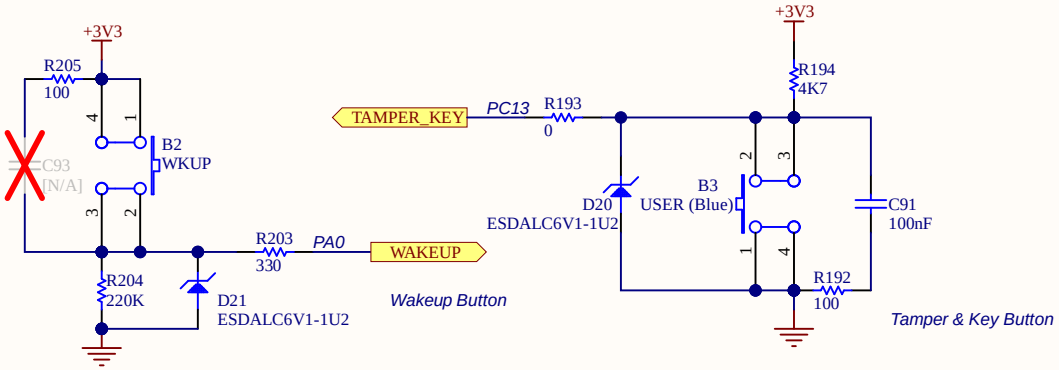

Potentiometer

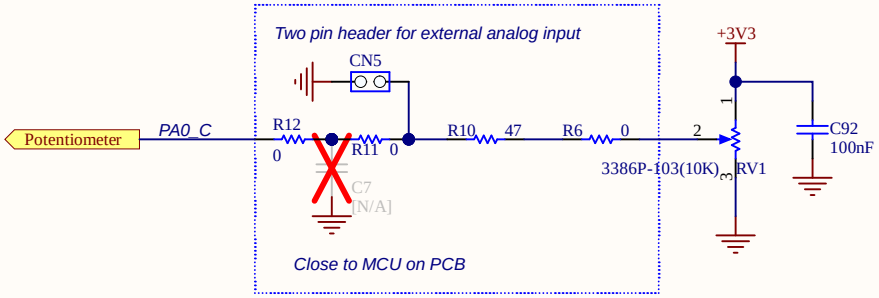

Joystick

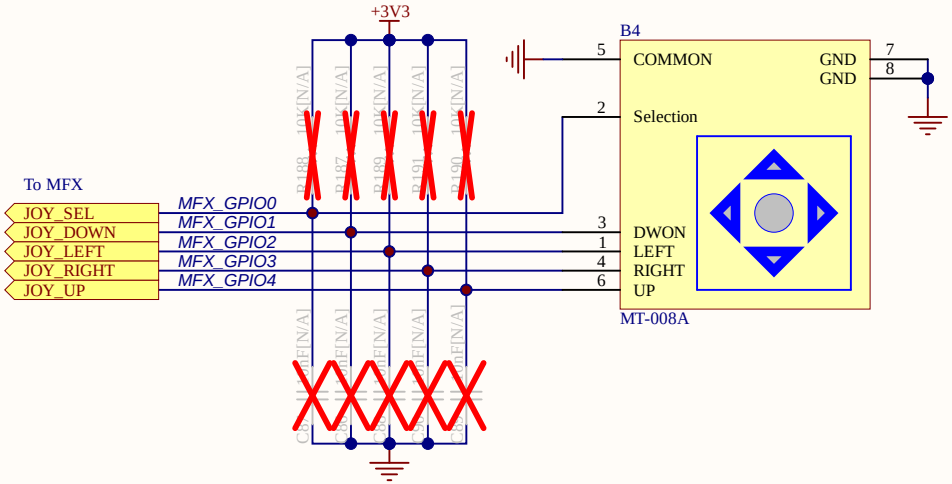

LEDs

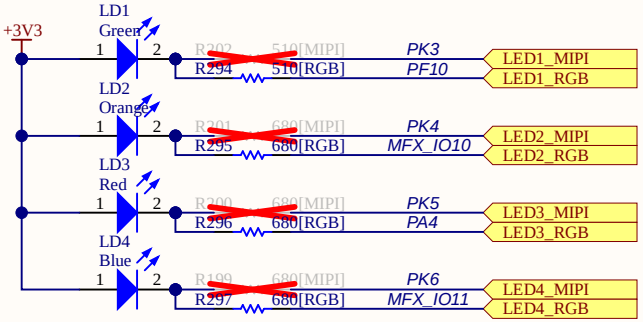

Title: **Peripherals**		
Project: **STM32H7xxI-Eval**		
Variant: H743		
Revision: E -02		Reference: MB1246
Size: A4	Date: 13/02/2019	Sheet: 14 of 18

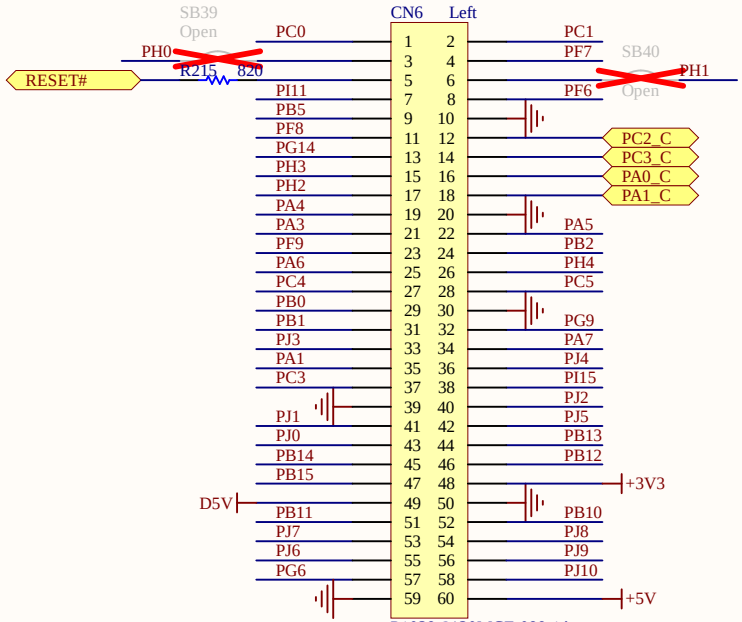

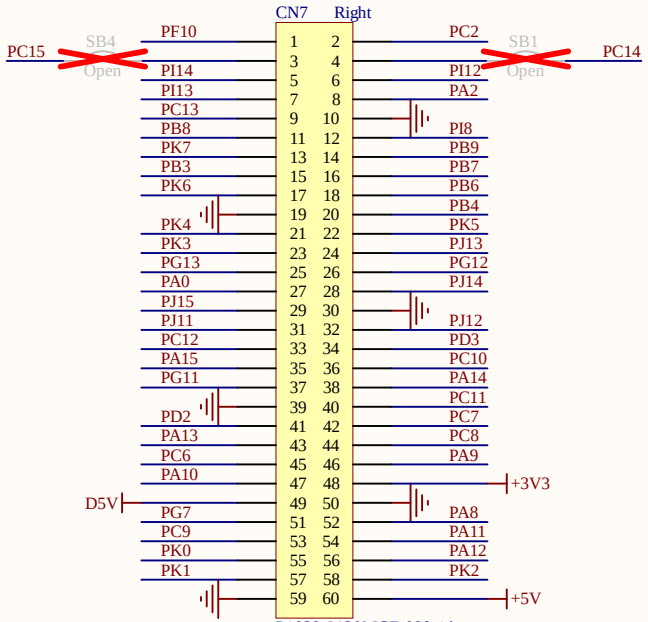

Place close Memory

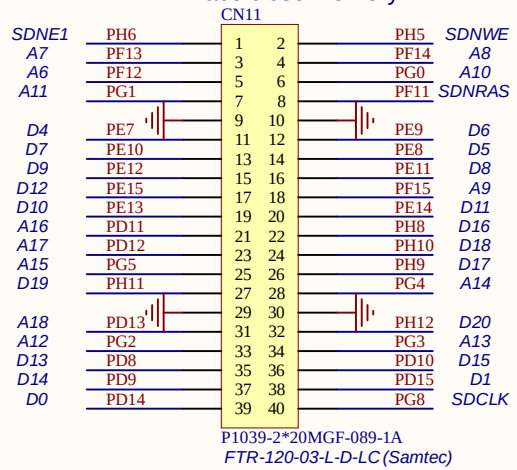

Place close Memory

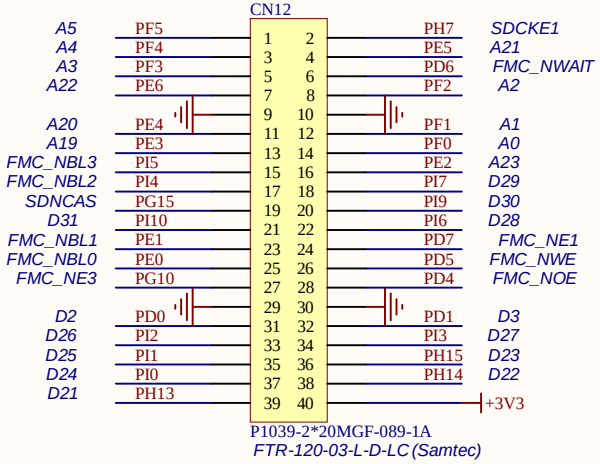

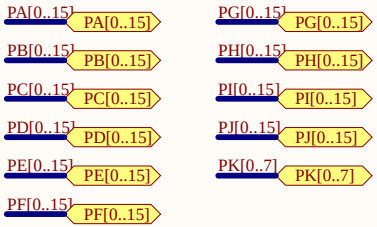

Title: **Extension Connectors**		
Project: **STM32H7xxI-Eval**		
Variant: H743		
Revision: E -02		Reference: MB1246
Size: A4	Date: 13/02/2019	Sheet: 15 of 18

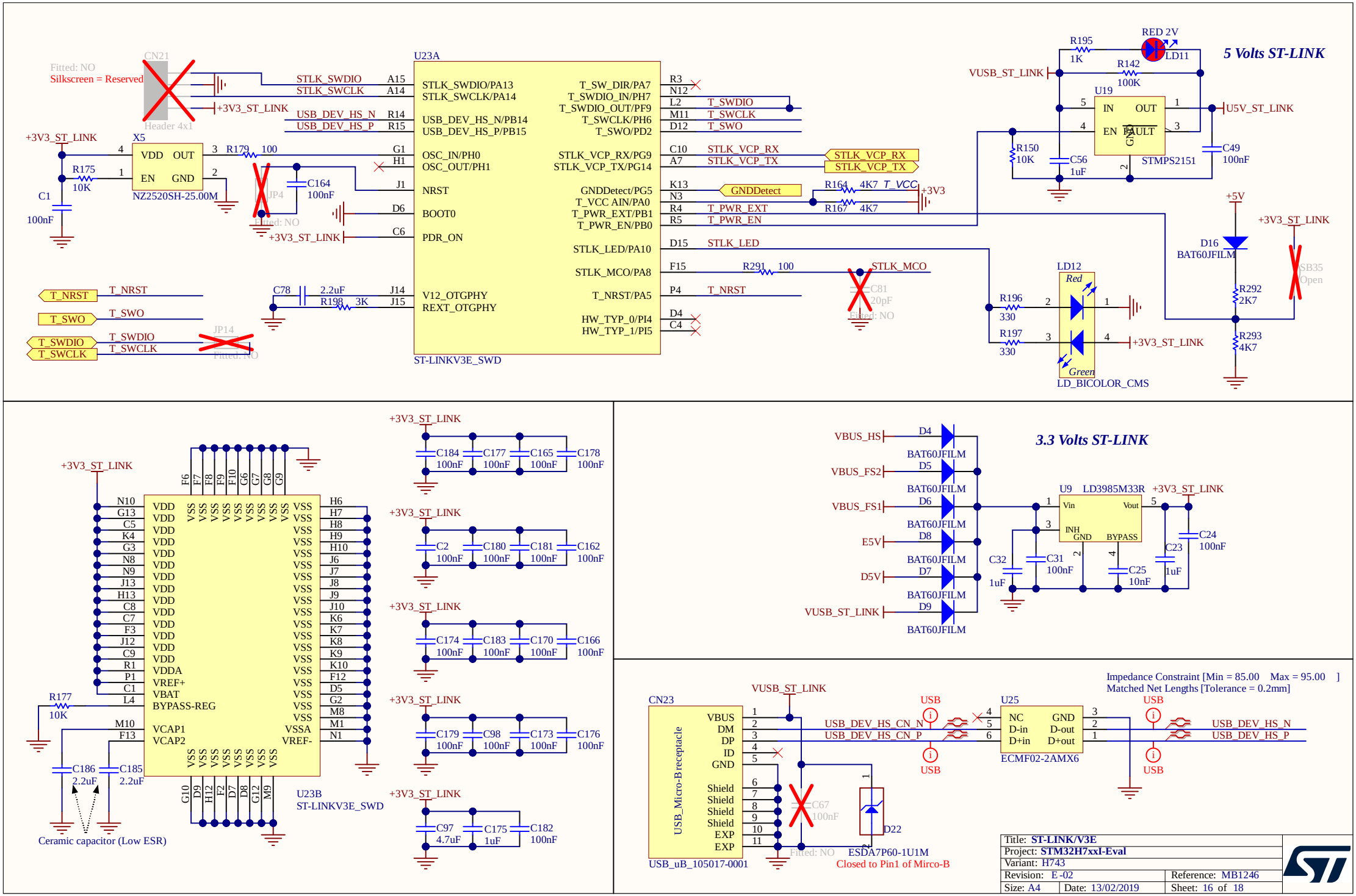
5 Volts ST-LINK
3.3 Volts ST-LINK
U23A
ST-LINKV3E_SWD
U23B
ST-LINKV3E_SWD
CN21
Header 4x1
Fitted: NO
Silkscreen = Reserved
X5
NZ2520SH-25.00M
JP4
JP14
U19
STMPS2151
U9
LD3985M33R
LD11
RED 2V
LD12
LD_BICOLOR_CMS
D16
BAT60JFILM
CN23
USB_Micro-Breeceptacle
USB_uB_105017-0001
U25
ECMF02-2AMX6
D22
ESDA7P60-1U1M
Closed to Pin1 of Mirco-B
Ceramic capacitor (Low ESR)
Impedance Constraint [Min = 85.00 Max = 95.00]
Matched Net Lengths [Tolerance = 0.2mm]
Title: ST-LINK/V3E
Project: STM32H7xxI-Eval
Variant: H743
Revision: E -02
Reference: MB1246
Size: A4
Date: 13/02/2019
Sheet: 16 of 18

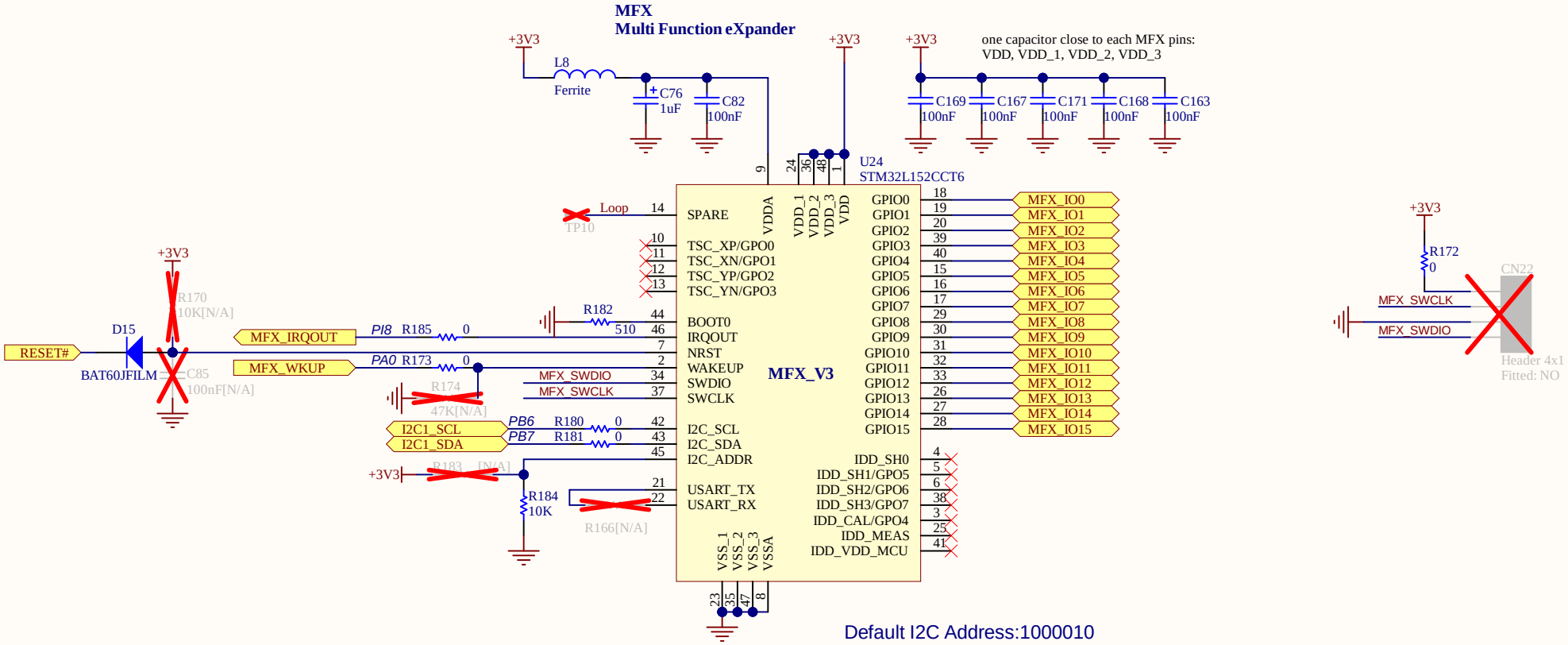

Title: **MFX**		
Project: **STM32H7xxI-Eval**		
Variant: H743		
Revision: E -02		Reference: MB1246
Size: A4	Date: 13/02/2019	Sheet: 17 of 18

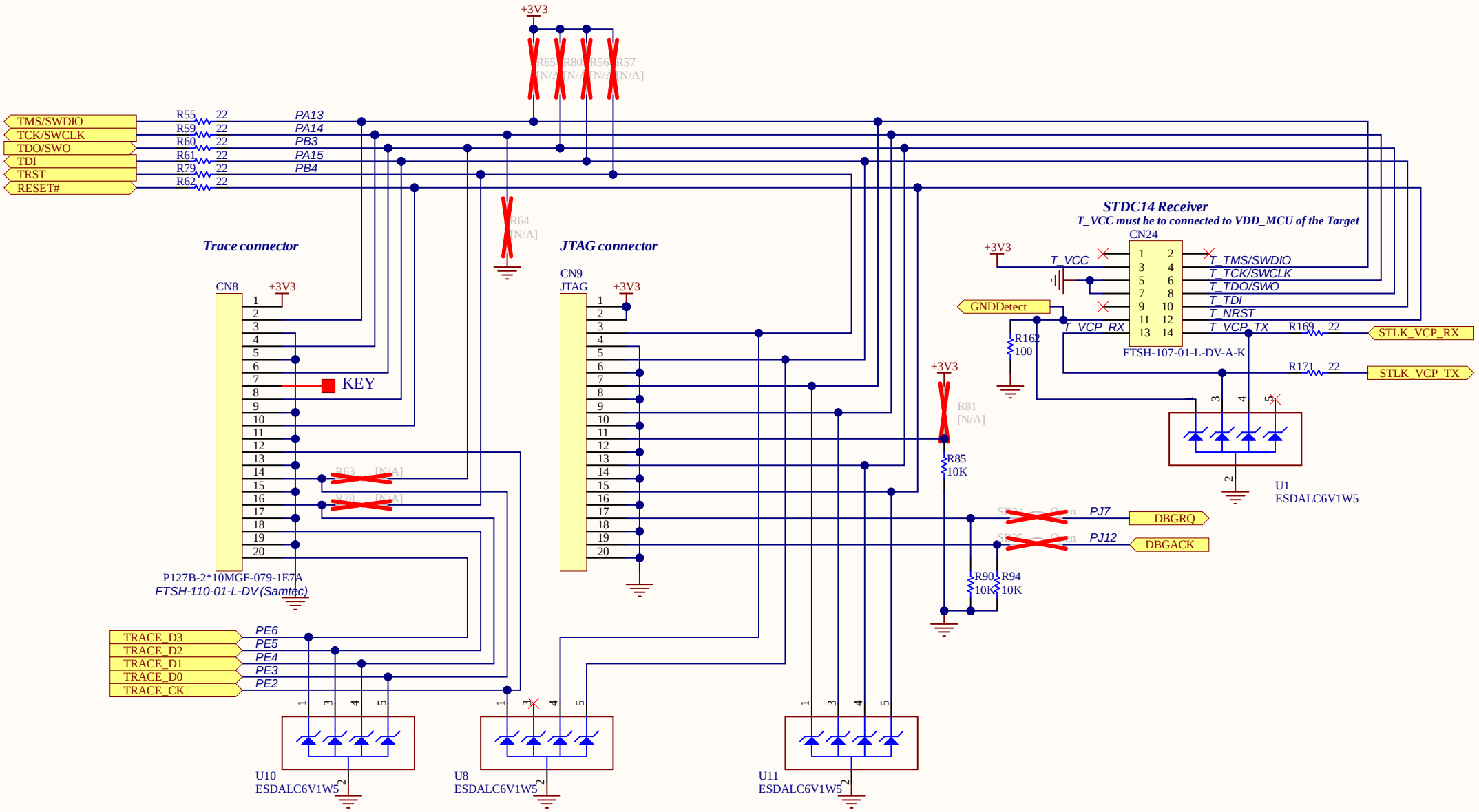

Title: **JTAG & Trace**		
Project: **STM32H7xxI-Eval**		
Variant: H743		
Revision: E -02		Reference: MB1246
Size: A4	Date: 13/02/2019	Sheet: 18 of 18