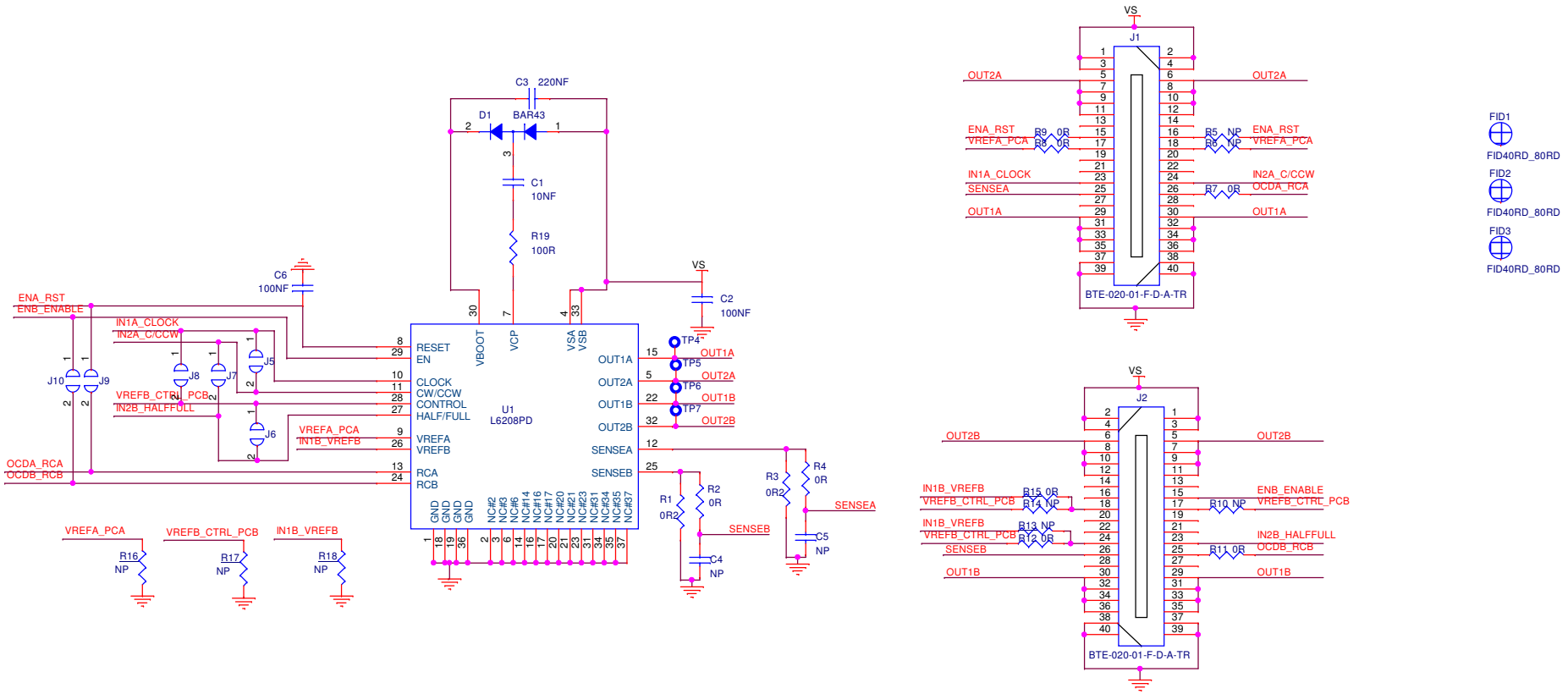

Title	EVL6208-PLUG schematics
Size A3	Document Number
Rev 01	
Date: Tuesday, July 20, 2021	Sheet 1 of 1