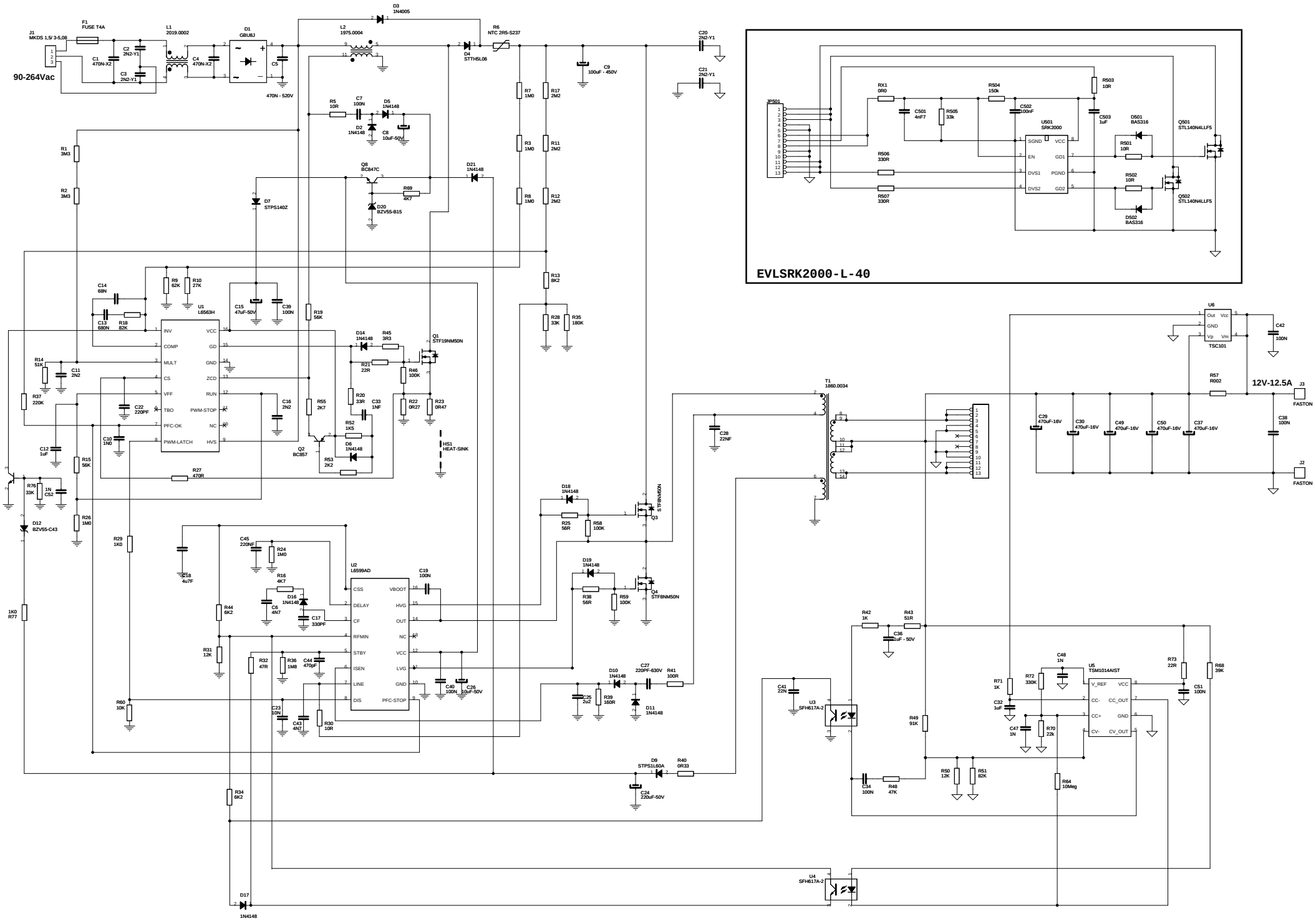
90-264Vac
J1
MKDS 1,5/ 3-5,08
F1
FUSE T4A
C1
470N-X2
C2
2N2-Y1
C3
2N2-Y1
L1
2019.0002
C4
470N-X2
D1
GBU8J
C5
470N - 520V
L2
1975.0004
D3
1N4005
D4
STTH5L06
R6
NTC 2R5-S237
C9
100uF - 450V
C20
2N2-Y1
C21
2N2-Y1
R5
10R
C7
100N
D5
1N4148
D2
1N4148
C8
10uF-50V
R1
3M3
R2
3M3
Q8
BC847C
R69
4K7
D20
BZV55-B15
D21
1N4148
D7
STPS140Z
R7
1M0
R17
2M2
R3
1M0
R11
2M2
R8
1M0
R12
2M2
R13
8K2
R28
33K
R35
180K
C14
68N
R9
62K
R10
27K
C13
680N
R18
82K
U1
L6563H
INV
COMP
MULT
CS
VFF
TBO
PFC-OK
PWM-LATCH
VCC
GD
GND
ZCD
RUN
PWM-STOP
NC
HVS
C15
47uF-50V
C39
100N
R19
56K
D14
1N4148
R45
3R3
Q1
STF19NM50N
R21
22R
R46
100K
R20
33R
C33
1NF
R22
0R27
R23
0R47
R14
51K
C11
2N2
R37
220K
C22
220PF
C16
2N2
R55
2K7
R52
1K5
D6
1N4148
R53
2K2
Q2
BC857
HS1
HEAT-SINK
C12
1uF
C10
1N0
R15
56K
R27
470R
BC847C
Q9
R76
33K
1N
C52
D12
BZV55-C43
R26
1M0
R29
1K0
C18
4u7F
C45
220NF
R24
1M0
R16
4K7
U2
L6599AD
CSS
DELAY
CF
RFMIN
STBY
ISEN
LINE
DIS
VBOOT
HVG
OUT
NC
VCC
LVG
GND
PFC-STOP
C19
100N
D16
1N4148
C6
4N7
C17
330PF
R44
6K2
R31
12K
R32
47R
R36
1M8
C44
470pF
R60
10K
C23
10N
C43
4N7
R30
10R
C40
100N
C26
10uF-50V
1K0
R77
D18
1N4148
R25
56R
R58
100K
Q3
STF8NM50N
D19
1N4148
R38
56R
R59
100K
Q4
STF8NM50N
D10
1N4148
C27
220PF-630V
R41
100R
C25
2u2
R39
160R
D11
1N4148
D9
STPS1L60A
R40
0R33
C24
220uF-50V
R34
6K2
D17
1N4148
C28
22NF
T1
1860.0034
C29
470uF-16V
C30
470uF-16V
C49
470uF-16V
C50
470uF-16V
C37
470uF-16V
R57
R002
12V-12.5A
J3
FASTON
J2
FASTON
C38
100N
U6
TSC101
Out
GND
Vp
Vcc
Vm
C42
100N
R42
1K
R43
51R
C36
1uF - 50V
C41
22N
U3
SFH617A-2
R49
91K
C34
100N
R48
47K
R50
12K
R51
82K
C48
1N
U5
TSM1014AIST
V_REF
CC-
CC+
CV-
VCC
CC_OUT
GND
CV_OUT
R71
1K
R72
330K
C32
1uF
C47
1N
R70
22k
R64
10Meg
R73
22R
R68
39K
C51
100N
U4
SFH617A-2
JP501
RX1
0R0
C501
4nF7
R505
33k
R504
150k
C502
100nF
R503
10R
C503
1uF
U501
SRK2000
SGND
EN
DVS1
DVS2
VCC
GD1
PGND
GD2
D501
BAS316
R501
10R
Q501
STL140N4LLF5
R506
330R
R507
330R
R502
10R
Q502
STL140N4LLF5
D502
BAS316
EVLSRK2000-L-40