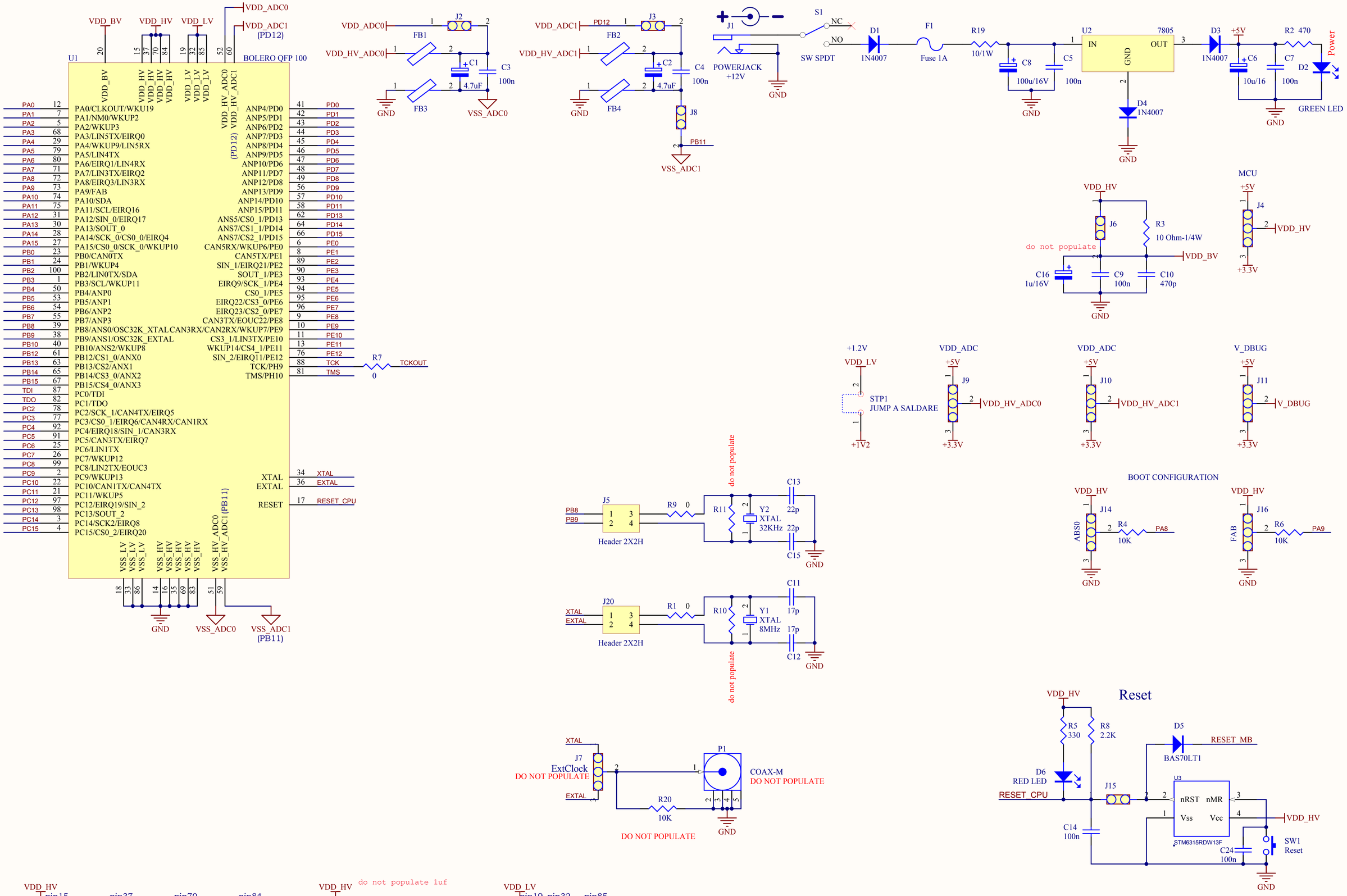

Title	Minimodule BOLERO QFP100		
Size A3	Number ASD423B		Revision 01.50
Date: 25/03/2010		Sheet 1 of 2	
File: \\..\Sheet1.SchDoc		Drawn By: *Ing. Alfonso FORGIONE*	

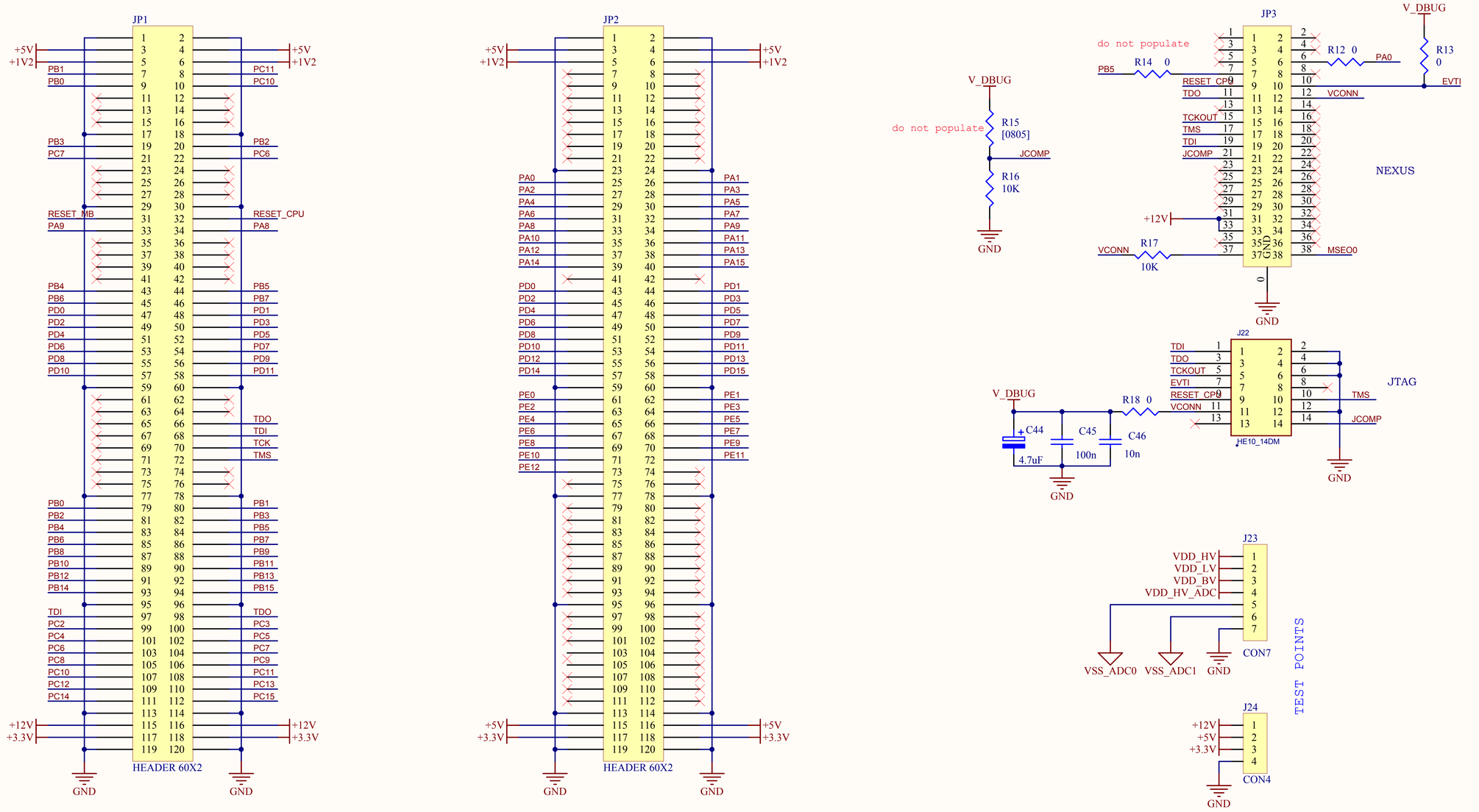

Title	Minimodule BOLERO QFP100	
Size A3	Number ASD423B	Revision 01.50
Date: 25/03/2010		Sheet 2 of 2
File: \\..\Sheet2.SchDoc		Drawn By: *Ing. Alfonso FORGIONE*