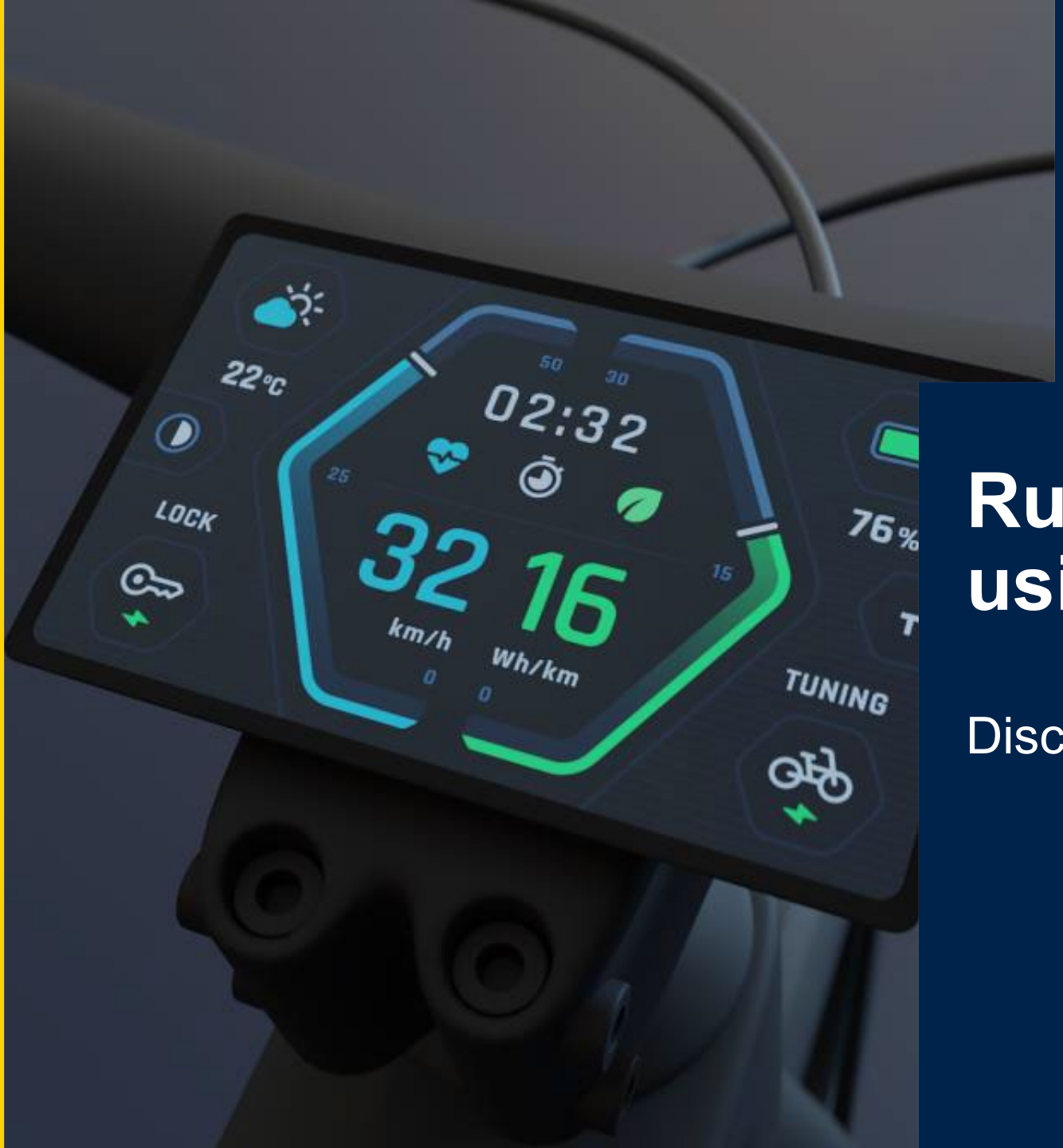

life.augmented

Run advanced graphics using single-chip solution

Discover STM32U5 MCU lines

STM32

“ **If only**
I could rely on a simple solution to design high-end, dynamic displays”

This is where we come in

STM32U5 lets developers streamline the development of advanced GUIs.

life.augmented

Enabling more dynamic UIs with dedicated STM32U5 MCU lines

High integration

- Up to 4 Mbytes of internal flash memory
- Up to 3 Mbytes of RAM

Cost-effective approach

- Less memory usage
- One-chip solution – No external memories
- Simple electronic design (4-layer PCB)
- Small form factor
- Easier engineering

High performance

Advanced graphic accelerators, such as next-gen NeoChrom GPU for vector graphics.

Enabling:

- Logo animations
- Multiple font sizes (supports readability)
- Map navigation (zoom in/out)
- MJPEG Codec: video playback (service/instruction videos)

Smoother and richer graphics with NeoChrom GPU

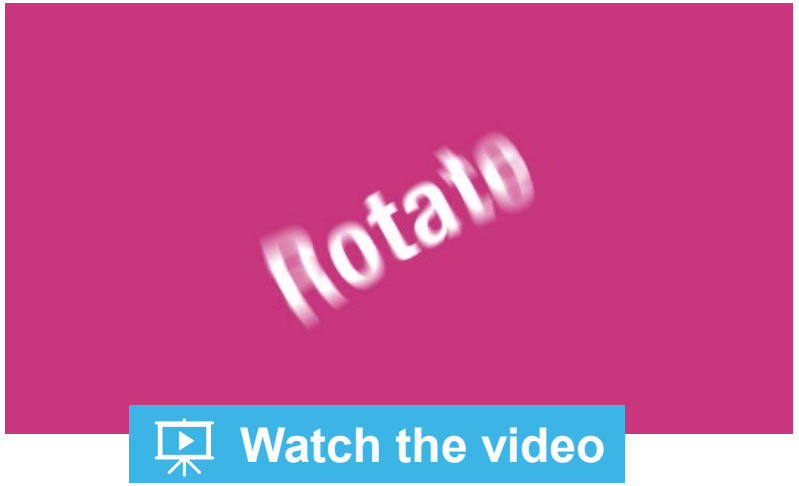

NeoChrom GPU

NeoChrom GPU offloads the CPU from the graphic computations, freeing up the memory and boosting performance.

Fully supported in the X-CUBE-TOUCHGFX

Enabling outstanding graphics on STM32, such as:

- Simple & advanced drawing
- 2D Copy
- Alpha blending
- Color format conversion
- Scaling, Rotation
- Perspective correct texture mapping
- Image format compression

NeoChrom GPU

Vector graphics

Vector graphics with NeoChromVG GPU

Scalable vector graphics (SVG)

- To gain nice dynamic effects
- To save flash memory

Fonts

- Drawing and manipulating characters and text-strings
- To enable dynamic graphics effects
- To save flash memory

Map

Vector graphics are required to make map navigation possible (big and dynamic maps, zooming)

Read the blog

life.augmented

STM32U5 lines for graphics

	STM32U575/585	STM32U599/5A9	STM32U5F9/5G9
Core	Arm® Cortex®-M33	Arm® Cortex®-M33	Arm® Cortex®-M33
Flash size	Up to 2 Mbytes	Up to 4 Mbytes	Up to 4 Mbytes
RAM size	786 Kbytes	2.5 Mbytes	3 Mbytes
JPEG Codec	-	-	Yes
Display interface	SPI, Parallel 8080	RGB, MIPI DSI	RGB, MIPI DSI
Graphics accelerator	ChromART	NeoChrom GPU ChromART	NeoChrom GPU Vector graphics ChromART

STM32U5F9 MCU in action

life.augmented

Hardware setup - STM32U5G9 lines

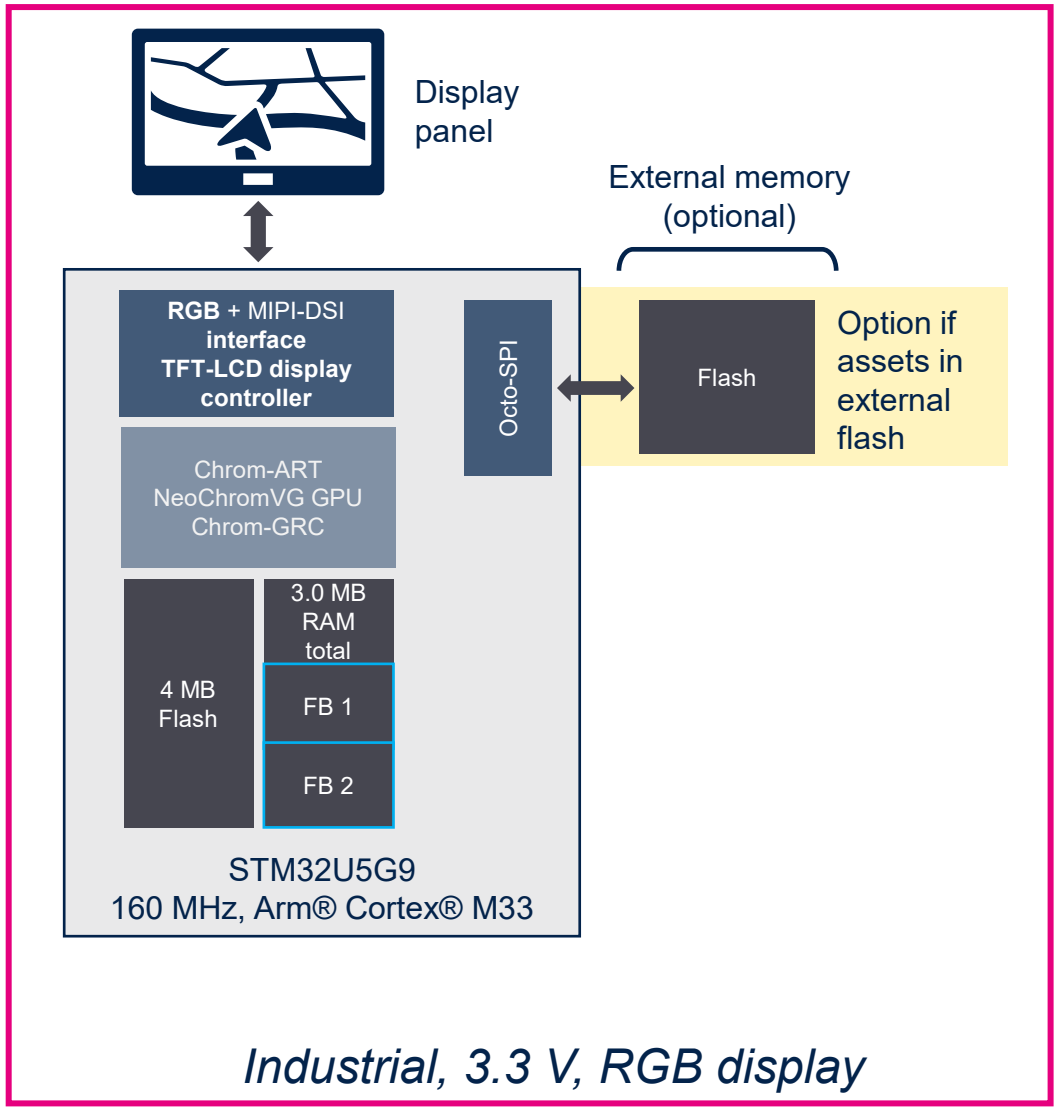

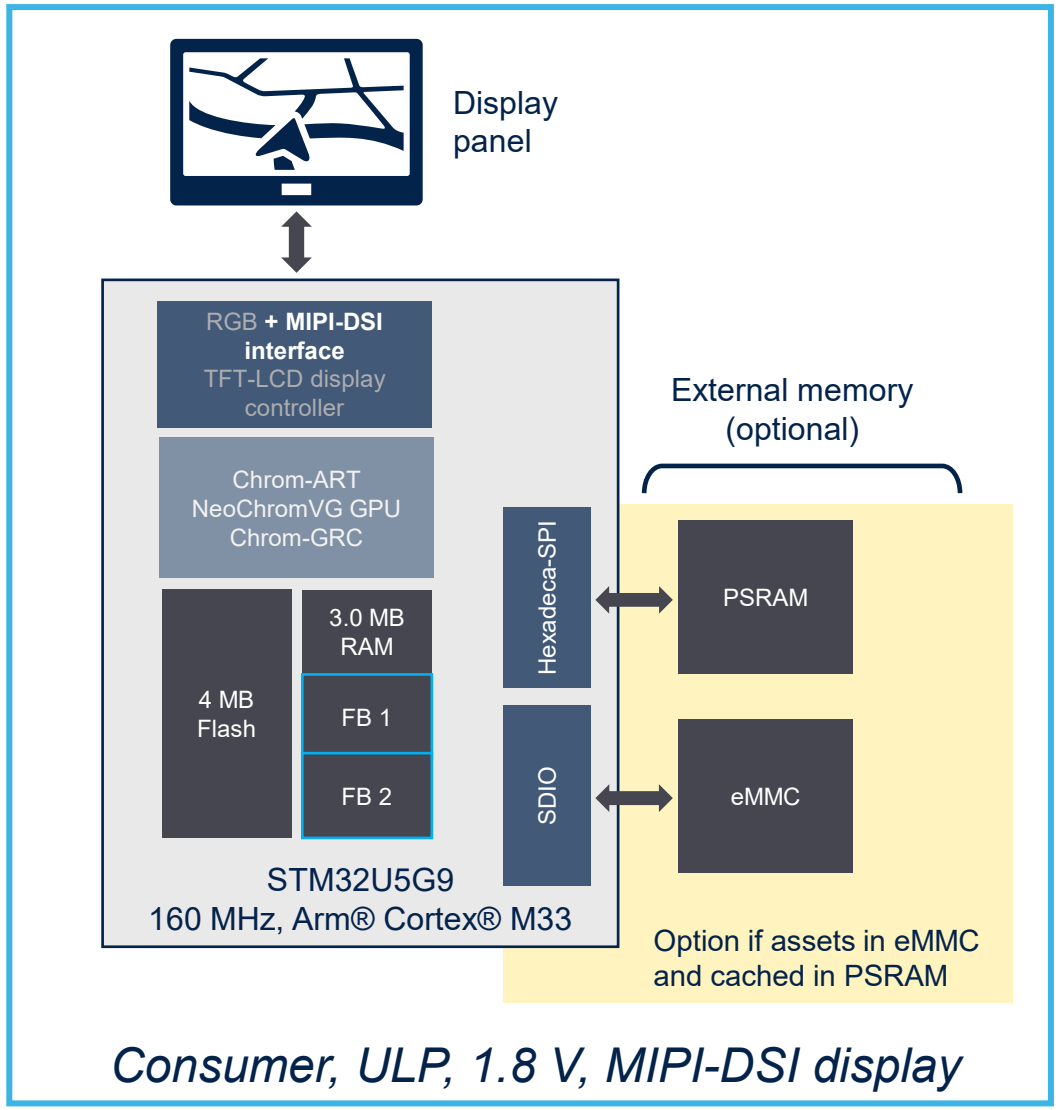

life.augmented

STM32U5F9/G9 – Higher integration

Parallel Interface

FSMC 8-/16-bit
(TFT-LCD, SRAM, NOR, NAND)

Display

MIPI-DSI 2 Lane 500Mps
TFT-LCD Controller

JPEG CODEC

Timers

19 timers including:
2 x 16-bit advanced motor control timers
4 x ULP timers
5 x 16-bit-timers
4 x 32-bit timers
GFX timer

I/Os

Touch-sensing controller
Camera Interface

Cortex-M33
160 MHz
FPU
MPU
TrustZone
ETM

NeoChrom GPU
Vector graphics

LPDMA

FMAC

CORDIC

ART Accelerator™

Up to 4Mbytes Flash Dual Bank

3 Mbytes RAM

Connectivity

USB HS+PHY OTG +PD,
2x SD/SDIO/MMC, 3x SPI,
6x I2C, 1x CAN FD,
2x Octo SPI (100MHz),
1x Hexa SPI (160MHz),
6x USART + 1x ULP UART

Digital

AES (256-bit), SHA-1, SHA-256 256,TRNG, PKA, 2x SAI, MDF, ADF

Analog

2x 14-bit ADC 2MSPS,
1x 12-bit ADC 2MSPS
2x DAC,
2x comparators, 2x op amps
1x temperature sensor

Numerous integrated peripherals

Advanced features for graphics

Large embedded memory

Multiple options to meet developers' needs
STM32U5 lines for advanced graphics

NeoChrom and NeoChrom VG

6 different packages

LQFP for industrial
BGA and CSP for consumer

4 memory size configurations

4 M Flash / 2.5M SRAM – 3MSRAM
2 M Flash / 2.5M SRAM – 2MSRAM

Flexible "assets" interface

SDIO (Nand eMMC) + Hexa SPI (Consumer)
Quad SPI – Octo SPI Nor Flash (Industrial)

28 variants

life.augmented

STM32U5 Graphics lines

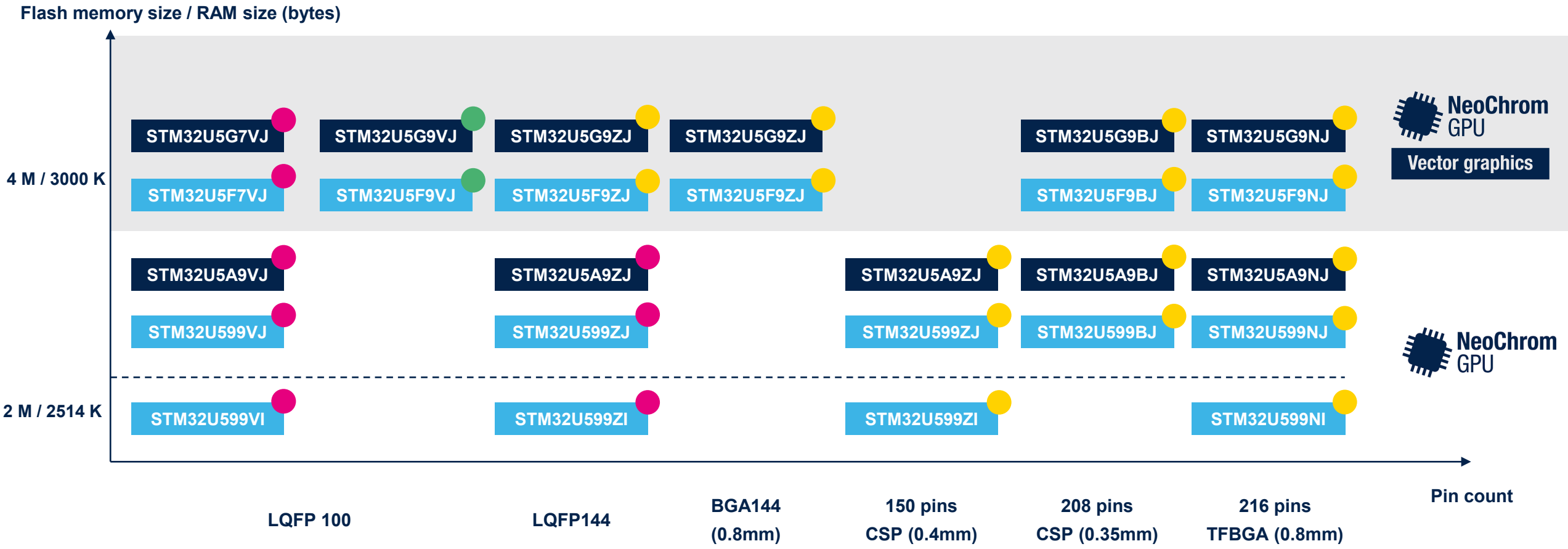

Legend: without HW crypto | with HW crypto | TFT-display | TFT and DSI display | DSI Display

Single-chip solution for advanced graphics

Lower your BOM costs with the STM32U5G9J-DK2 kit.
Available as simple PCB reference design.

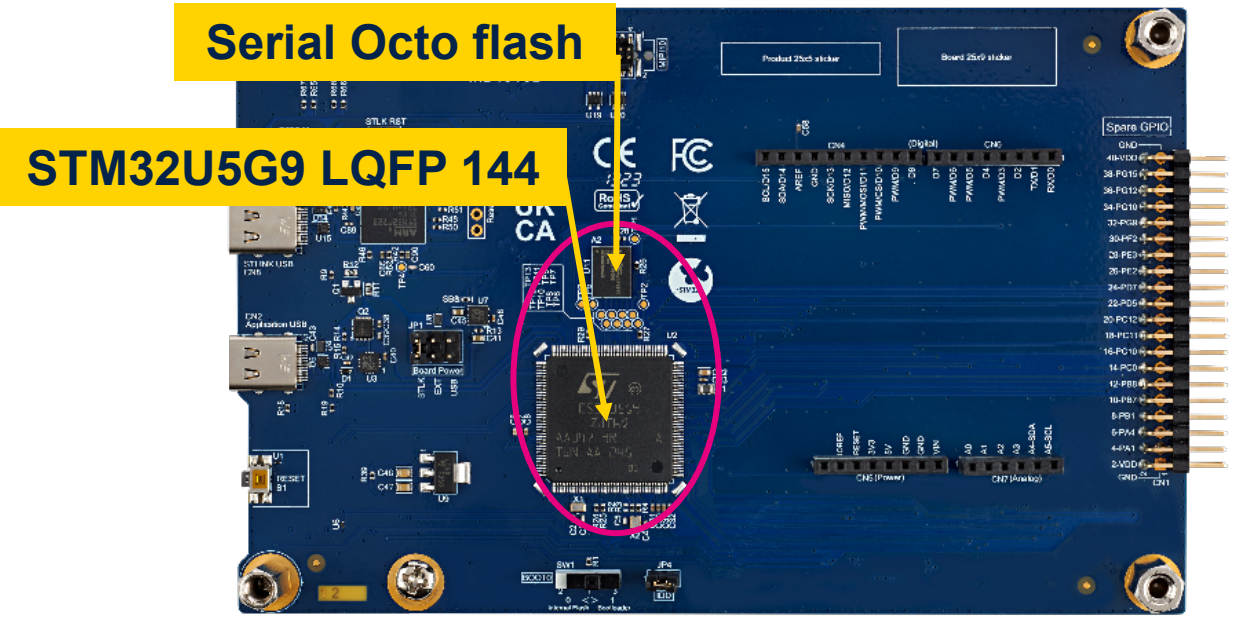

1. **No external memory required**
   - Internal RAM 3 Mbytes
   - Internal flash memory of 4 Mbytes
2. **Simple PCB**
   - Robust design
   - LQFP packages (only 4-layer PCB)
3. **Easier engineering**

Order now

life.augmented

Evaluation and development tools for STM32U5 Graphics

Watch demo video

Watch demo video

Riverdi

Discovery kit	Discovery kit for industrial	STM32 Nucleo	Partners
STM32U5A9J-DK **STM32U5G9J-DK1** 480 x 480 resolution eMMC – PSRAM 1.8V	**STM32U5G9J-DK2** 800 x 480 1Gbit NOR 3.3V	**Nucleo-U575ZI-Q** **Nucleo-U5A5ZJ-Q** Affordable and quick prototyping	**Riverdi_50STM32U599** 5” 800x480 RGB TFT display 6–48V, Octo-SPI flash TFBGA 216
STM32U5F9 TFBGA 216 Kit can accommodate both STM32U599 and STM32U5F9	STM32U5F9 in LQFP144 and STM32U5F9Z	Supports STM32U599Z only no STM32U5F9 Nucleo	STM32U599 and STM32U5G9 support

Supported in TouchGFX

Software tools for smooth development

All ST STM32U5 display kits are fully supported in TouchGFX:

- TBS TouchGFX Board Support (low level BSP)
- Demos in full source (App level for reference or copy)

TouchGFX GUI software tool

ST's free framework for creating graphical user interfaces on STM32 microcontrollers.

Read more

Select the MCU and pick the associated developer kit → Download **TouchGFX** → Find your display kit → Create/select a demo → Flash your display kit

life.augmented

TouchGFX One chip solution: let’s make it happen

Use TouchGFX built-in features to develop advanced GUIs requiring **low flash usage**

Bitmap compression:
- L8 image format
- Compression of L8

Vector operations:
- SVG
- VG Fonts

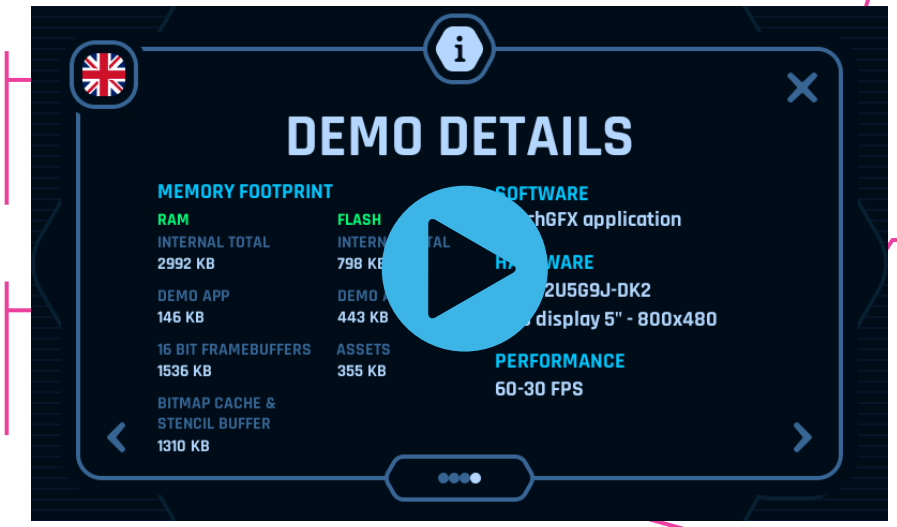

Full demo – Savings:
- Bitmap implementation: 10,5MB
- Flash-limiting implementation: 800 KB
- Flash savings: 92%

TouchGFX reference app running on STM32U5G9 proven advanced GUI with only internal memory.

Full project available in TouchGFX Designer under Board Specific Demo

life.augmented

Developer resources

Webpages

- STM32U575/585
- STM32U599/5A9
- STM32U5F9/5G9
- Webpage: Find the right set of tools for your GUI design
- Webpage: New highly integrated microcontroller

with advanced graphics capabilities

Blog articles

- STM32U5
- NeoChrom GPU
- TouchGFX

Support: TouchGFX Documentation here

Download X-CUBE-TOUCHGFX

Demo videos available YouTube

life.augmented

Our technology starts with You

Find out more at www.st.com/stm32u5

© STMicroelectronics - All rights reserved.
ST logo is a trademark or a registered trademark of STMicroelectronics International NV or its affiliates in the EU and/or other countries.
For additional information about ST trademarks, please refer to www.st.com/trademarks.
All other product or service names are the property of their respective owners.

life.augmented