STB30N65M5, STP30N65M5, STW30N65M5

Datasheet

N-channel 650 V, 125 mΩ typ., 22 A MDmesh M5 Power MOSFETs in a D²PAK, TO-220 and TO-247 packages

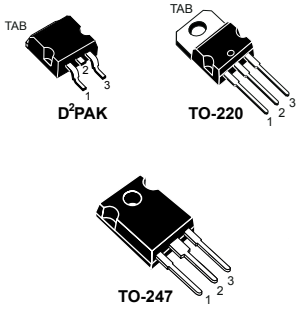

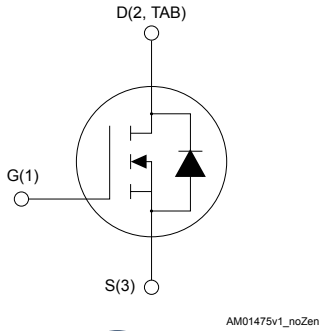

Features

Order code	V_{DS}	$R_{DS(on)}$ max.	I_D
STB30N65M5	650 V	139 mΩ	22 A
STP30N65M5			
STW30N65M5			

- Higher V_{DSS} rating
- Higher dv/dt capability
- Excellent switching performance
- Extremely low $R_{DS(on)}$
- 100% avalanche tested

Applications

- Switching applications

Description

These devices are N-channel Power MOSFETs based on the MDmesh M5 innovative vertical process technology combined with the well-known PowerMESH horizontal layout. The resulting products offer extremely low on-resistance, making them particularly suitable for applications requiring high power and superior efficiency.

Product status links
STB30N65M5
STP30N65M5
STW30N65M5

1 Electrical ratings

Table 1. Absolute maximum ratings

Symbol	Parameter	Value	Unit
V_{GS}	Gate-source voltage	±25	V
I_D	Drain current (continuous) at T_C = 25 °C	22	A
I_D	Drain current (continuous) at T_C = 100 °C	13	A
I_{DM}(1)	Drain current (pulsed)	88	A
P_{TOT}	Total power dissipation at T_C = 25 °C	140	W
dv/dt(2)	Peak diode recovery voltage slope	15	V/ns
T_{stg}	Storage temperature range	-55 to 150	°C
T_J	Operating junction temperature range		

1. *Pulse width limited by safe operating area.*
2. *I_{SD} ≤ 21 A, di/dt ≤ 400 A/µs; V_{DS} (peak) < $V_{(BR)DSS}$.*

Table 2. Thermal data

Symbol	Parameter	Value			Unit
		D^2PAK	TO-220	TO-247	
R_{thJC}	Thermal resistance, junction-to-case	0.83			°C/W
R_{thJA}	Thermal resistance, junction-to-ambient	30(1)	62.5	50	°C/W

1. *When mounted on a standard 1 inch^2 area of FR-4 PCB with 2-oz copper.*

Table 3. Avalanche characteristics

Symbol	Parameter	Value	Unit
I_{AR}	Avalanche current, repetitive or not-repetitive (pulse width limited by T_J max.)	7	A
E_{AS}	Single pulse avalanche energy (starting T_J = 25 °C, I_D = I_{AR}, V_{DD} = 50 V)	500	mJ

2 Electrical characteristics

T_C = 25 °C unless otherwise specified.

Table 4. On/off states

Symbol	Parameter	Test condition	Min.	Typ.	Max.	Unit
$V_{(BR)DSS}$	Drain-source breakdown voltage	I_D = 1 mA, V_{GS} = 0 V	650	-	-	V
I_{DSS}	Zero gate voltage drain current	V_{GS} = 0 V, V_{DS} = 650 V	-	-	1	µA
		V_{GS} = 0 V, V_{DS} = 650 V, T_C = 125 °C(1)	-	-	100	µA
I_{GSS}	Gate body leakage current	V_{DS} = 0 V, V_{GS} = ±25 V	-	-	±100	nA
$V_{GS(th)}$	Gate threshold voltage	V_{DS} = V_{GS}, I_D = 250 µA	3	4	5	V
$R_{DS(on)}$	Static drain-source on-resistance	V_{GS} = 10 V, I_D = 11 A	-	125	139	mΩ

1. *Specified by design, not tested in production.*

Table 5. Dynamic

Symbol	Parameter	Test condition	Min.	Typ.	Max.	Unit
C_{iss}	Input capacitance	V_{DS} = 100 V, f = 1 MHz, V_{GS} = 0 V	-	2880	-	pF
C_{oss}	Output capacitance		-	68	-	
C_{rss}	Reverse transfer capacitance		-	5	-	
$C_{o(tr)}$(1)	Equivalent output capacitance time related	V_{DS} = 0 to 520 V, V_{GS} = 0 V	-	190	-	pF
$C_{o(er)}$(2)	Equivalent output capacitance energy related		-	65	-	pF
R_g	Gate input resistance	f = 1 MHz open drain	-	1.6	-	Ω
Q_g	Total gate charge	V_{DD} = 520 V, I_D = 11 A, V_{GS} = 0 to 10 V (see the Figure 17. Test circuit for gate charge behavior)	-	64	-	nC
Q_{gs}	Gate-source charge		-	16	-	
Q_{gd}	Gate-drain charge		-	25	-	

1. *$C_{o(tr)}$ is an equivalent capacitance that provides the same charging time as Coss while V_{DS} is rising from 0 V to the stated value.*
2. *$C_{o(er)}$ is an equivalent capacitance that provides the same stored energy as C_{oss} while V_{DS} is rising from 0 V to the stated value.*

Table 6. Switching times

Symbol	Parameter	Test condition	Min.	Typ.	Max.	Unit
$t_{d(off)}$	Turn-off delay time	V_{DD} = 400 V, I_D = 14 A, R_G = 4.7 Ω, V_{GS} = 10 V (see the Figure 18. Test circuit for inductive load switching and diode recovery times and Figure 21. Switching time waveform)	-	50	-	ns
$t_{r(v)}$	Voltage rise time		-	8	-	
$t_{c(off)}$	Crossing time off		-	20	-	
$t_{f(i)}$	Current fall time		-	10	-	

Table 7. Source-drain diode

Symbol	Parameter	Test condition	Min.	Typ.	Max.	Unit
I_{SD}	Source-drain current		-	-	22	A
I_{SDM}[1]	Source-drain current (pulsed)		-	-	88	
V_{SD}[2]	Forward on voltage	I_{SD} = 22 A, V_{GS} = 0 V	-	-	1.5	V
t_{rr}	Reverse recovery time	I_{SD} = 22 A, di/dt = 100 A/µs V_{DD} = 60 V (see the Figure 18. Test circuit for inductive load switching and diode recovery times)	-	336	-	ns
Q_{rr}	Reverse recovery charge		-	6	-	µC
I_{RRM}	Reverse recovery current		-	32	-	A
t_{rr}	Reverse recovery time	I_{SD} = 22 A, di/dt = 100 A/µs V_{DD} = 60 V, T_J = 150 °C (see the Figure 18. Test circuit for inductive load switching and diode recovery times)	-	342	-	ns
Q_{rr}	Reverse recovery charge		-	7	-	µC
I_{RRM}	Reverse recovery current		-	34	-	A

1. *Pulse width limited by safe operating area.*
2. *Pulsed: pulse duration = 300 µs, duty cycle 1.5%.*

2.1 Electrical characteristics (curves)

Figure 1. Safe operating area for D²PAK and TO-220

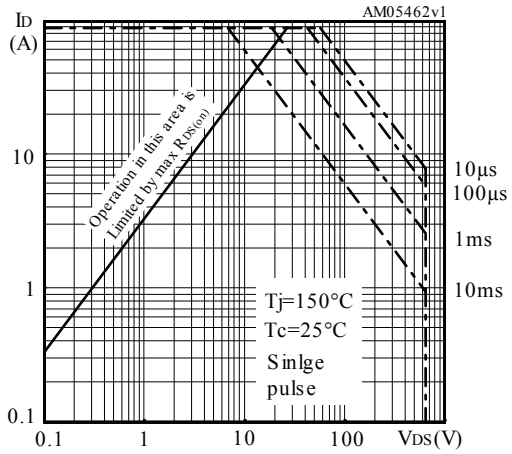

Figure 2. Normalized transient thermal impedance for D²PAK and TO-220

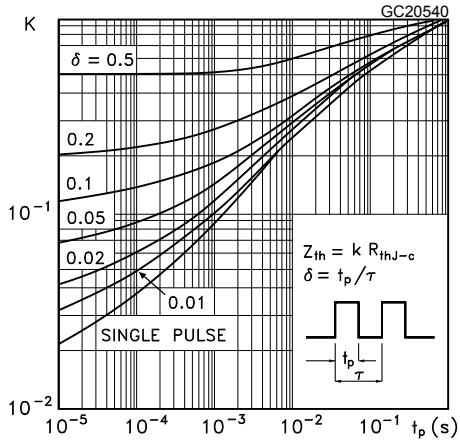

Figure 3. Safe operating area for TO-247

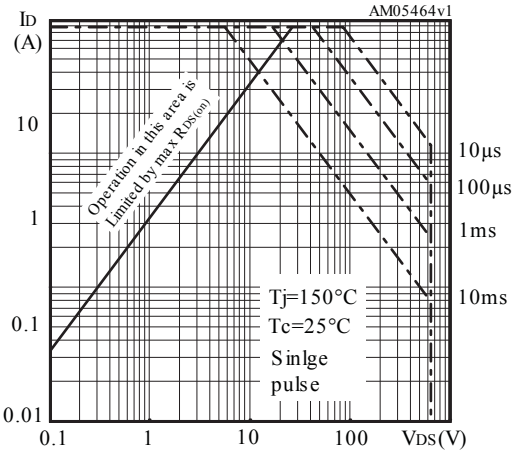

Figure 4. Normalized transient thermal impedance for TO-247

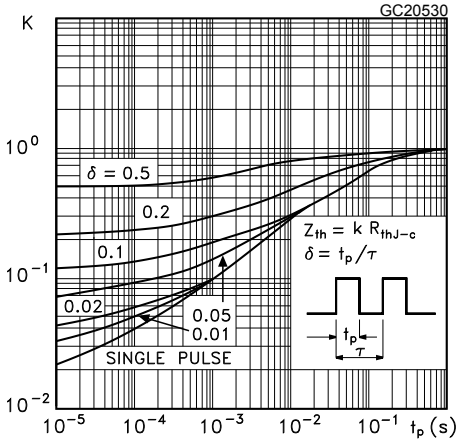

Figure 5. Output characteristics

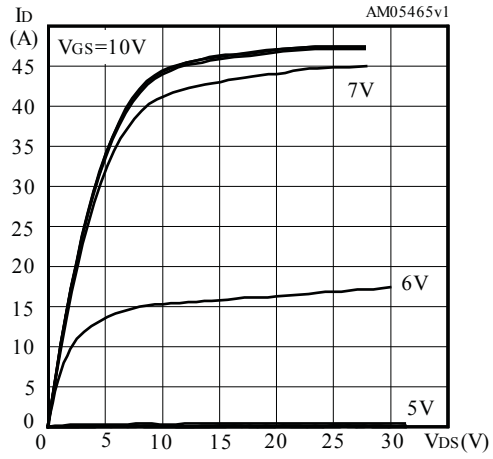

Figure 6. Transfer characteristics

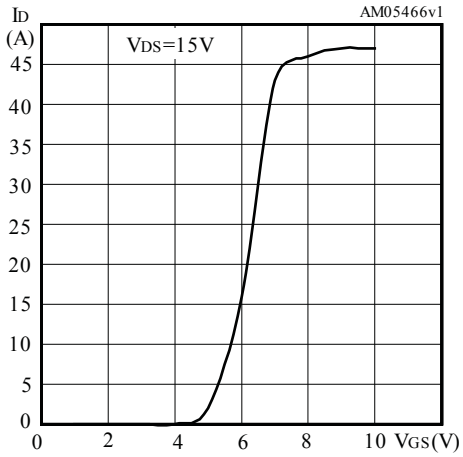

Figure 7. Gate charge vs gate-source voltage

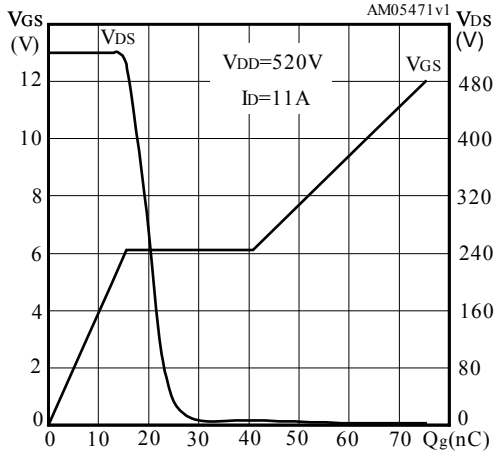

Figure 8. Static drain-source on-resistance

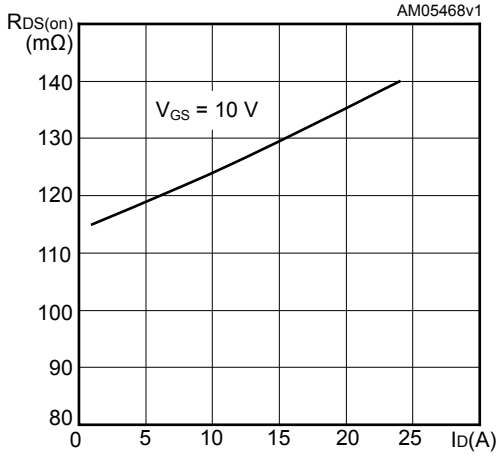

Figure 9. Capacitance variations

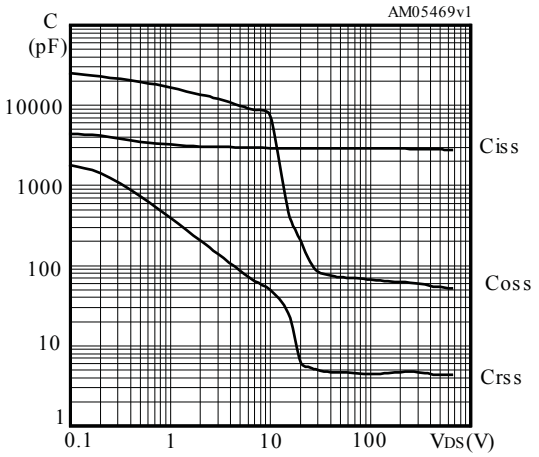

Figure 10. Output capacitance stored energy

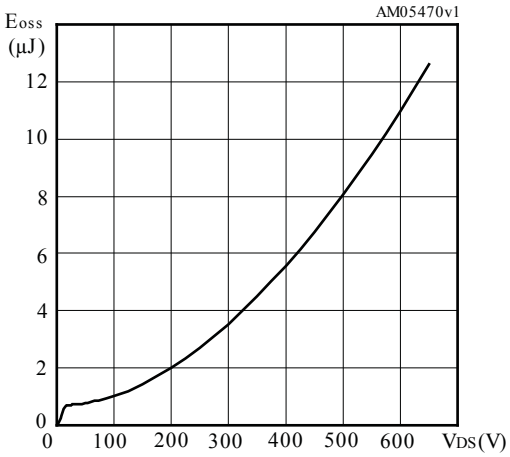

Figure 11. Normalized gate threshold voltage vs temperature

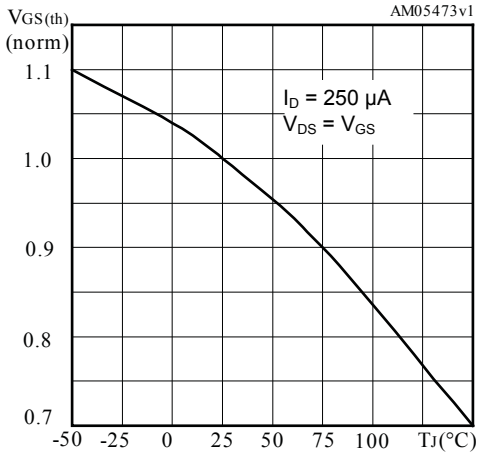

Figure 12. Normalized on-resistance vs temperature

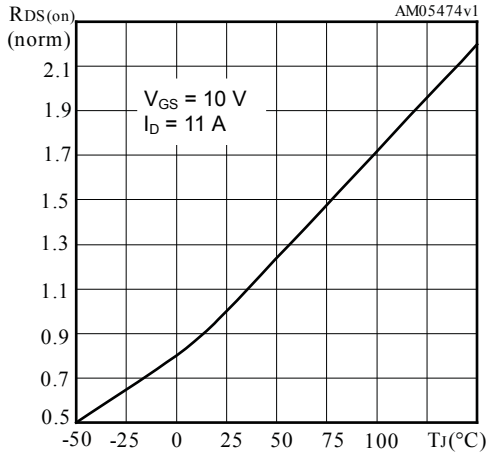

Figure 13. Drain-source diode forward characteristics

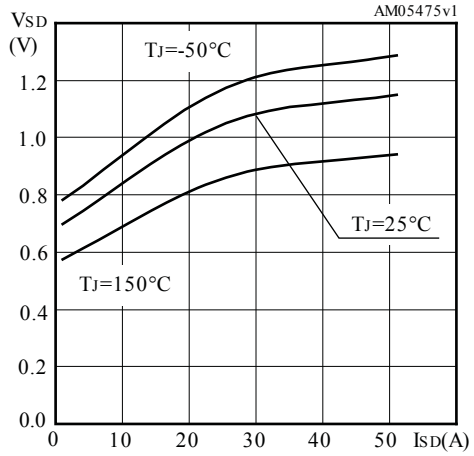

Figure 14. Normalized $V_{(BR)DSS}$ vs temperature

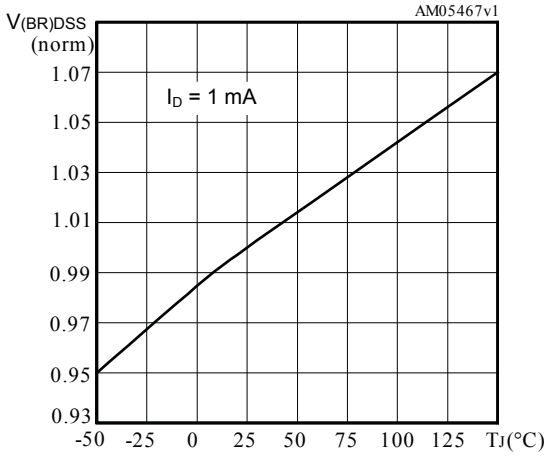

Figure 15. Switching energy vs gate resistance

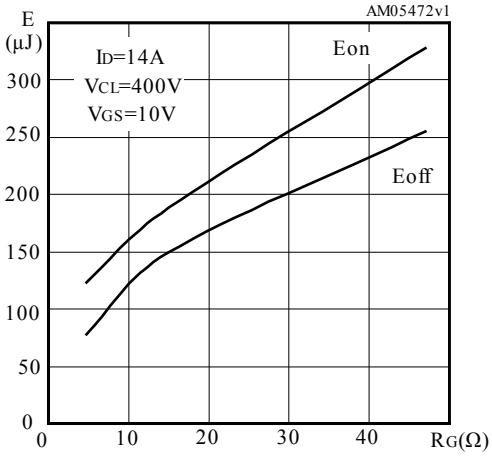

Note: *E_{on} including reverse recovery of a SiC diode.*

3 Test circuits

Figure 16. Test circuit for resistive load switching times

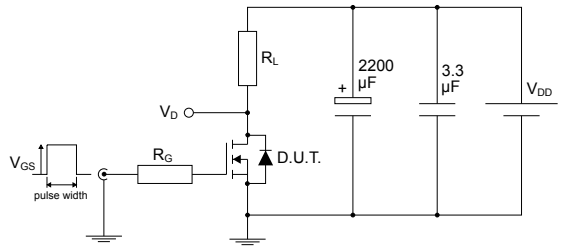

AM01468v1

Figure 17. Test circuit for gate charge behavior

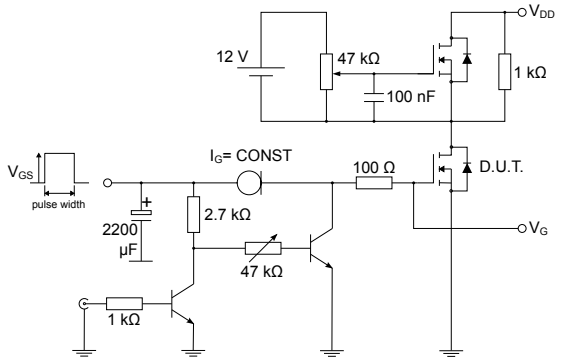

AM01469v1

Figure 18. Test circuit for inductive load switching and diode recovery times

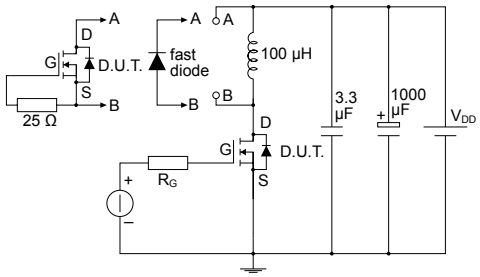

AM01470v1

Figure 19. Unclamped inductive load test circuit

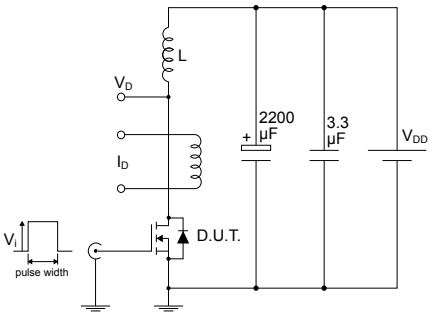

AM01471v1

Figure 20. Unclamped inductive waveform

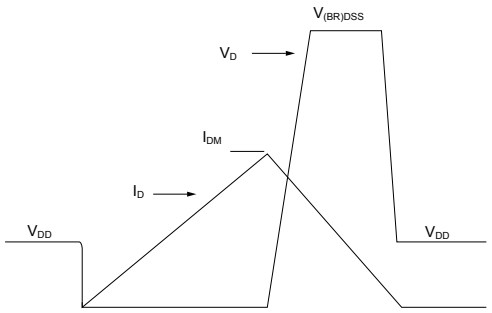

AM01472v1

Figure 21. Switching time waveform

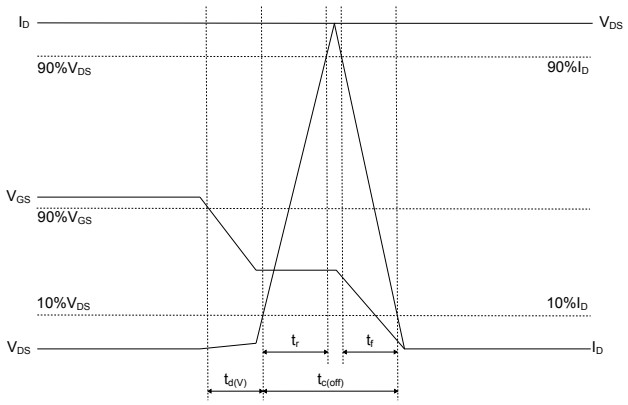

AM05540v2

4 Package information

To meet environmental requirements, ST offers these devices in different grades of ECOPACK packages, depending on their level of environmental compliance. ECOPACK specifications, grade definitions, and product status are available at: www.st.com. ECOPACK is an ST trademark.

4.1 D²PAK (TO-263) type A2 package information

Figure 22. D²PAK (TO-263) type A2 package outline

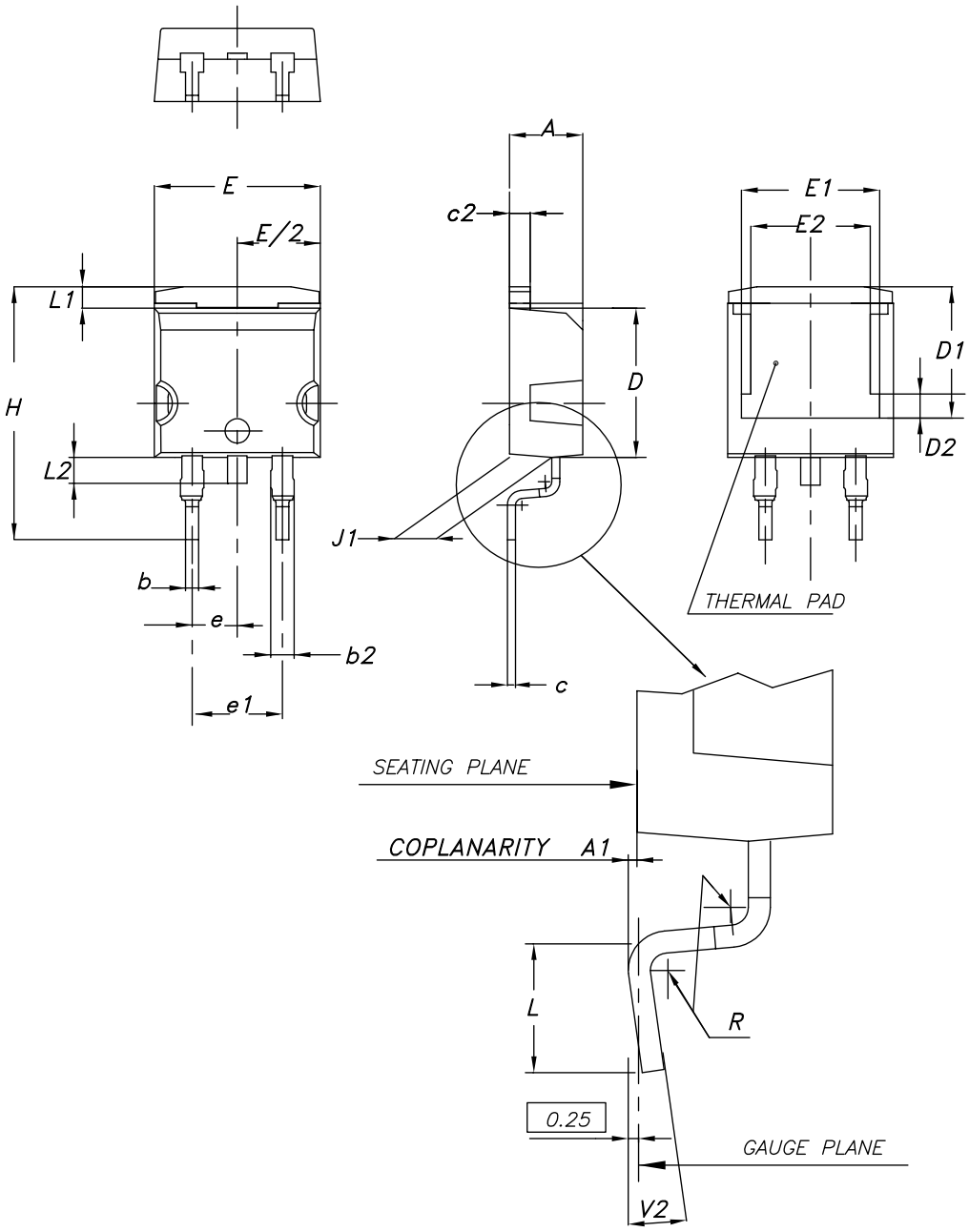

0079457_A2_27

Table 8. D²PAK (TO-263) type A2 package mechanical data

Dim.	mm		
	Min.	Typ.	Max.
A	4.40		4.60
A1	0.03		0.23
b	0.70		0.93
b2	1.14		1.70
c	0.45		0.60
c2	1.23		1.36
D	8.95		9.35
D1	7.50	7.75	8.00
D2	1.10	1.30	1.50
E	10.00		10.40
E1	8.70	8.90	9.10
E2	7.30	7.50	7.70
e		2.54	
e1	4.88		5.28
H	15.00		15.85
J1	2.49		2.69
L	2.29		2.79
L1	1.27		1.40
L2	1.30		1.75
R		0.40	
V2	0°		8°

Figure 23. **D²PAK (TO-263) recommended footprint (dimensions are in mm)**

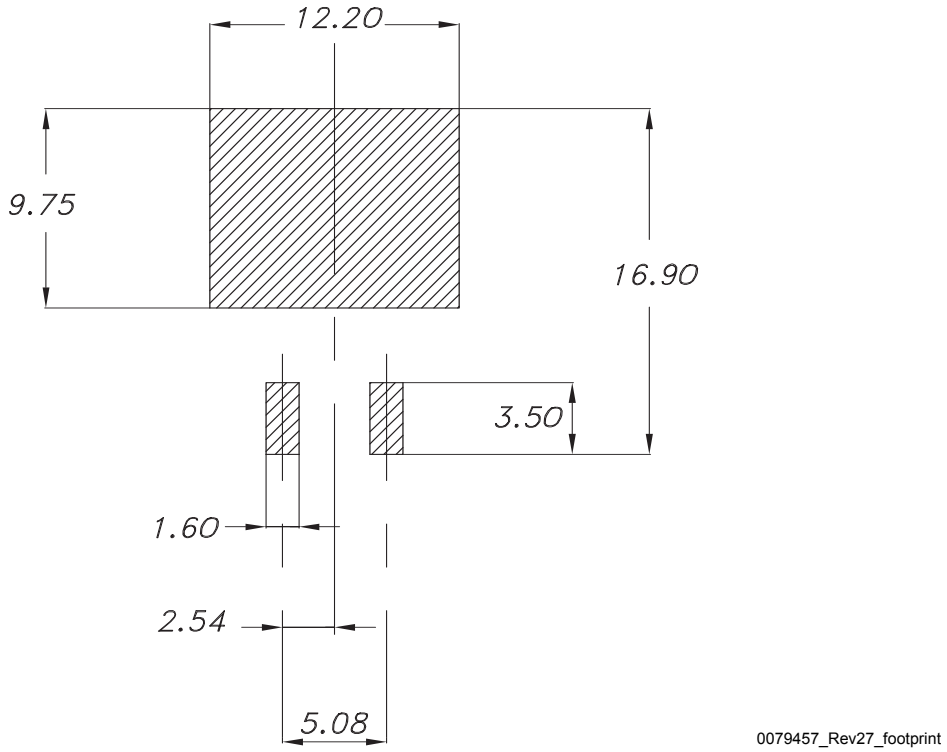

4.2 TO-220 type A package information

Figure 24. TO-220 type A package outline

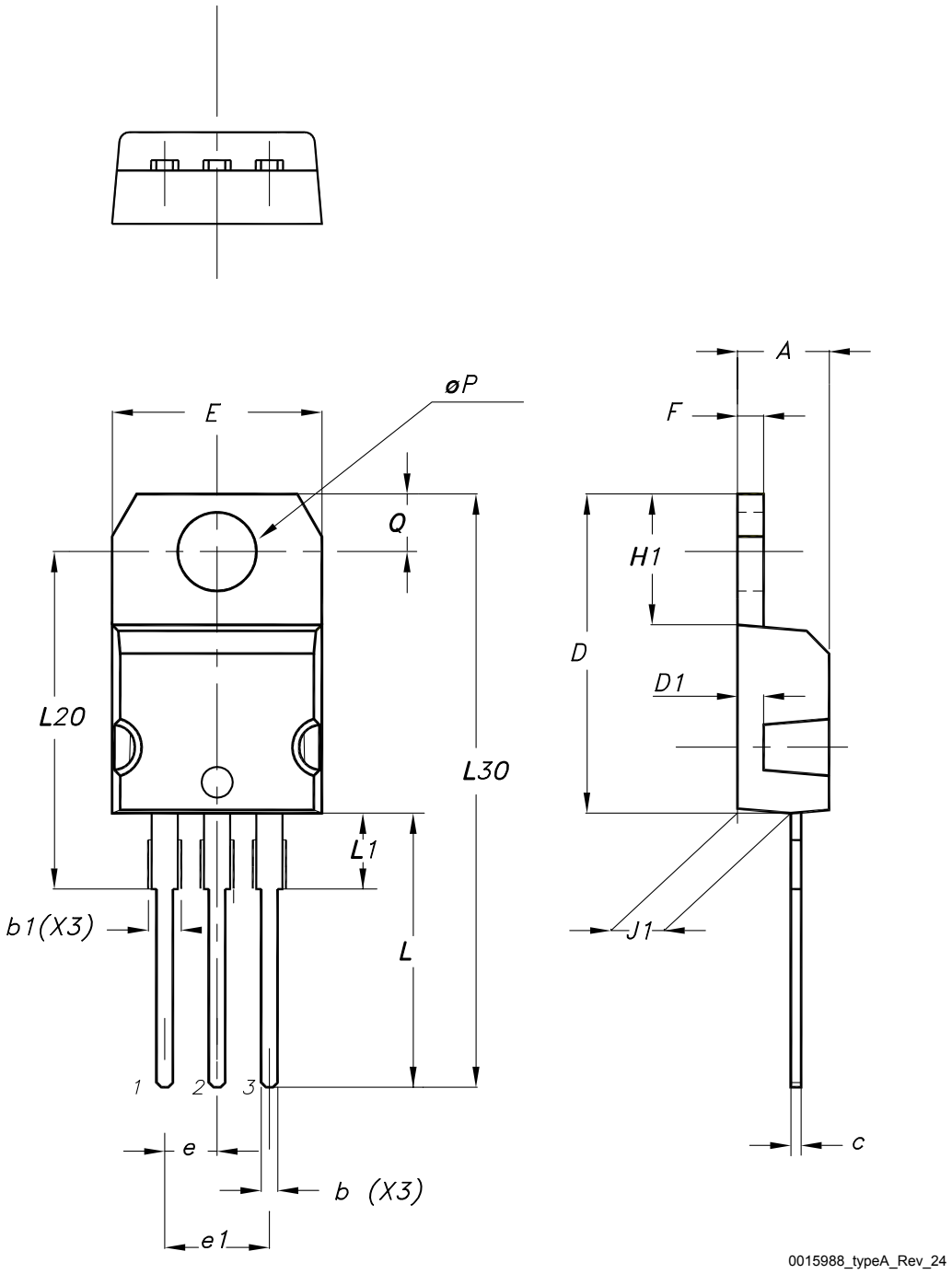

Table 9. TO-220 type A package mechanical data

Dim.	mm		
	Min.	Typ.	Max.
A	4.40		4.60
b	0.61		0.88
b1	1.14		1.55
c	0.48		0.70
D	15.25		15.75
D1		1.27	
E	10.00		10.40
e	2.40		2.70
e1	4.95		5.15
F	1.23		1.32
H1	6.20		6.60
J1	2.40		2.72
L	13.00		14.00
L1	3.50		3.93
L20		16.40	
L30		28.90	
øP	3.75		3.85
Q	2.65		2.95
Slug flatness		0.03	0.10

4.3 TO-247 package information

Figure 25. **TO-247 package outline**

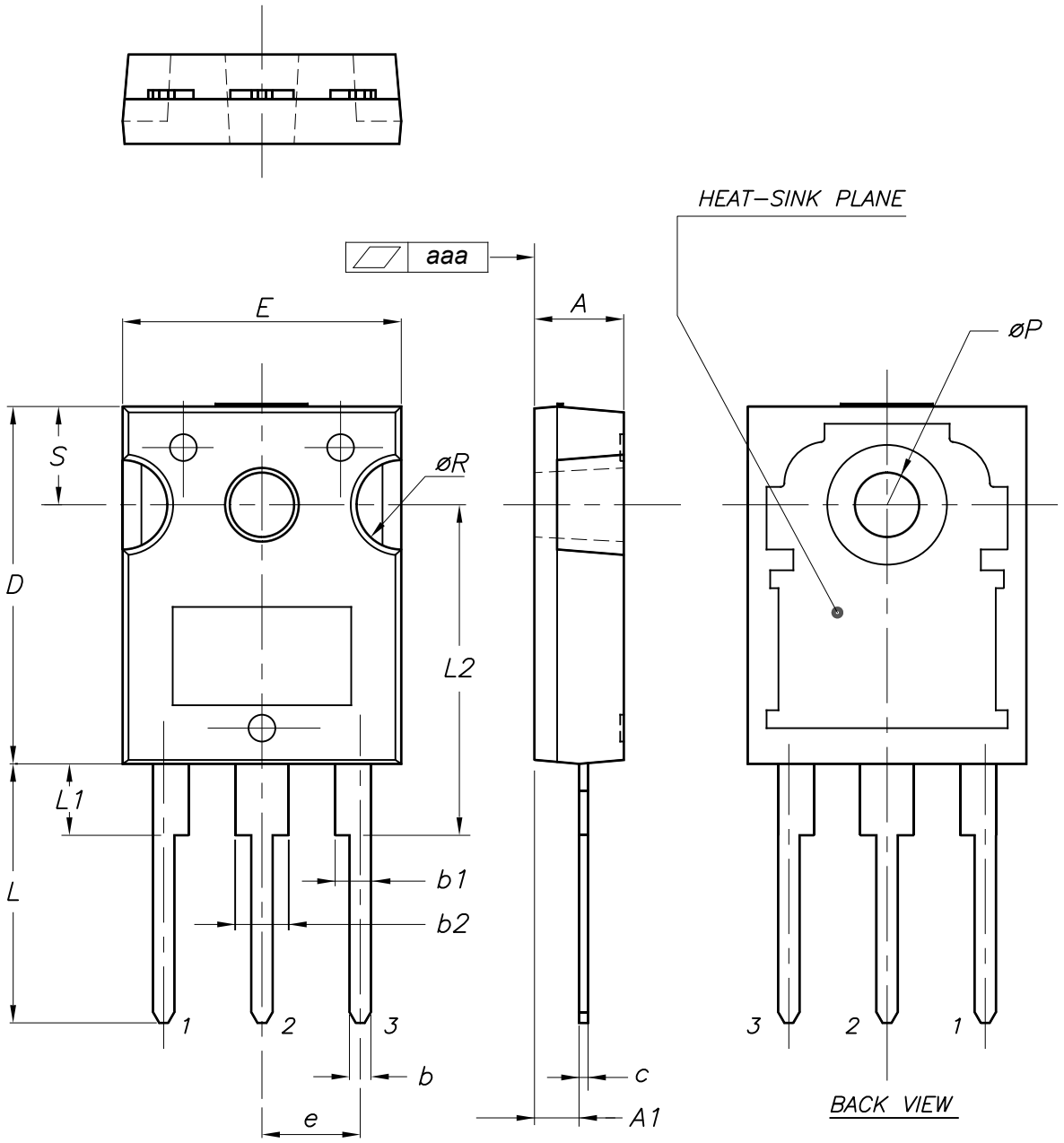

0075325_10

Table 10. **TO-247 package mechanical data**

Dim.	mm		
	Min.	Typ.	Max.
A	4.85		5.15
A1	2.20		2.60
b	1.0		1.40
b1	2.0		2.40
b2	3.0		3.40
c	0.40		0.80
D	19.85		20.15
E	15.45		15.75
e	5.30	5.45	5.60
L	14.20		14.80
L1	3.70		4.30
L2		18.50	
ØP	3.55		3.65
ØR	4.50		5.50
S	5.30	5.50	5.70
aaa		0.04	0.10

4.4 D²PAK packing information

Figure 26. D²PAK tape drawing (dimensions are in mm)

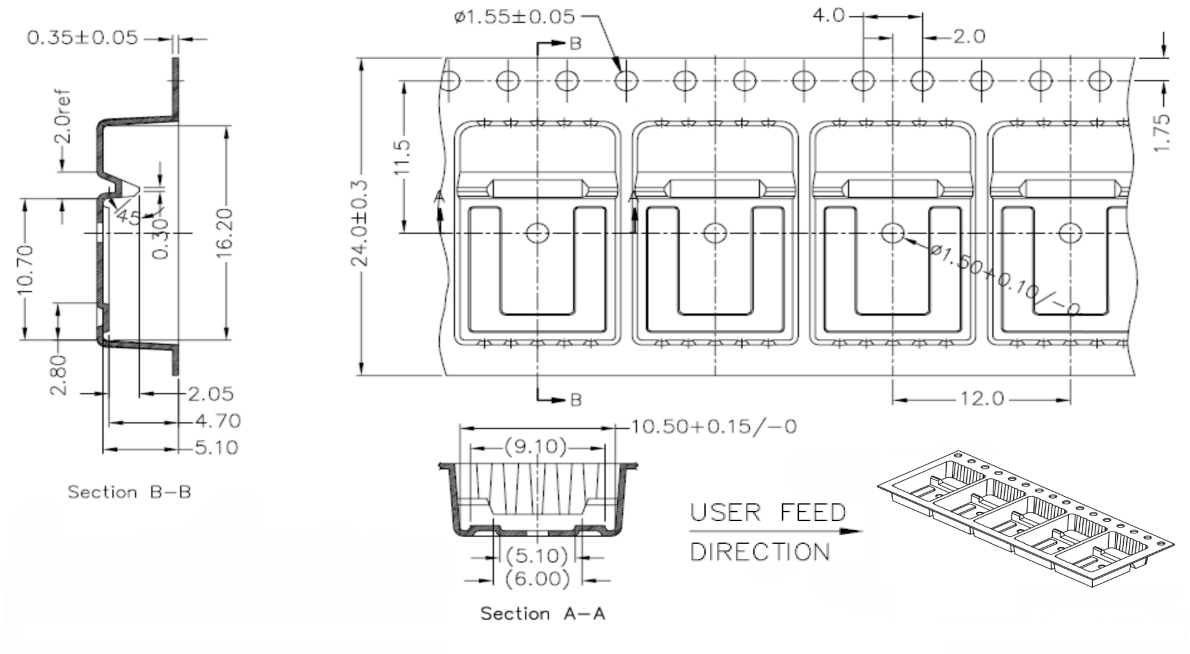

DM01095771_2

5 Ordering information

Table 11. Order codes

Order codes	Marking	Package	Packing
STB30N65M5	30N65M5	D²PAK	Tape and reel
STP30N65M5		TO-220	Tube
STW30N65M5		TO-247	

Revision history

Table 12. Document revision history

Date	Revision	Changes
16-Jan-2009	1	First release.
21-Sep-2009	2	Document status promoted from preliminary data to datasheet.
22-Sep-2011	3	$C_{o(er)}$ and $C_{o(tr)}$ values changed in *Table 5: Dynamic*. *Table 6: Switching times* parameters updates. *Figure 24: Switching time waveform* has been corrected. Minor text changes *Section 4: Package mechanical data* has been modified. Added: *Table 8: D²PAK (TO-263) mechanical data*, *Figure 25: D²PAK (TO-263) drawing* and *Figure 26: D²PAK footprint*; *Table 9: TO-220FP mechanical data* and *Figure 27: TO-220FP drawing*; *Table 10: I²PAK (TO-262) mechanical data* and *Figure 28: I²PAK (TO-262) drawing*; *Table 11: TO-220 type A mechanical data* and *Figure 29: TO-220 type A drawing*; *Table 12: TO-247 mechanical data* and *Figure 30: TO-247 drawing*. *Section 5: Packaging mechanical data* has been modified. Added: *Table 13: D²PAK (TO-263) tape and reel mechanical data*, *Figure 31: Tape* and *Figure 32: Reel*.
19-Sep-2025	4	Removed order code STI30N65M5 and STF30N65M5. Updated Section 4: Package information. Minor text changes.

Contents

1 Electrical ratings 2

2 Electrical characteristics 3

2.1 Electrical characteristics (curves) 5

3 Test circuits 8

4 Package information 9

4.1 D²PAK (TO-263) type A2 package information 9

4.2 TO-220 type A package information 12

4.3 TO-247 package information 14

4.4 D²PAK packing information 16

5 Ordering information 17

Revision history 18

IMPORTANT NOTICE – READ CAREFULLY

STMicroelectronics NV and its subsidiaries (“ST”) reserve the right to make changes, corrections, enhancements, modifications, and improvements to ST products and/or to this document at any time without notice.

In the event of any conflict between the provisions of this document and the provisions of any contractual arrangement in force between the purchasers and ST, the provisions of such contractual arrangement shall prevail.

The purchasers should obtain the latest relevant information on ST products before placing orders. ST products are sold pursuant to ST’s terms and conditions of sale in place at the time of order acknowledgment.

The purchasers are solely responsible for the choice, selection, and use of ST products and ST assumes no liability for application assistance or the design of the purchasers’ products.

No license, express or implied, to any intellectual property right is granted by ST herein.

Resale of ST products with provisions different from the information set forth herein shall void any warranty granted by ST for such product.

If the purchasers identify an ST product that meets their functional and performance requirements but that is not designated for the purchasers' market segment, the purchasers shall contact ST for more information.

ST and the ST logo are trademarks of ST. For additional information about ST trademarks, refer to www.st.com/trademarks. All other product or service names are the property of their respective owners.

Information in this document supersedes and replaces information previously supplied in any prior versions of this document.

© 2025 STMicroelectronics – All rights reserved