STB28N60M2, STI28N60M2
STP28N60M2, STW28N60M2

Datasheet

N-channel 600 V, 135 mΩ typ., 22 A MDmesh M2 Power MOSFET in a D²PAK, I²PAK, TO-220 and TO-247 packages

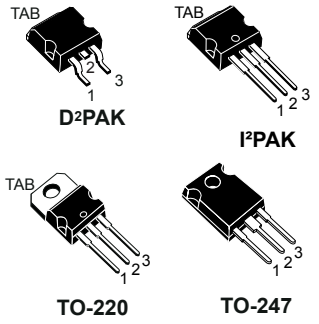

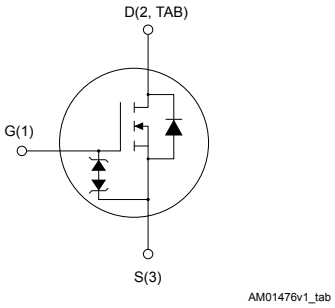

Features

Order code	V_{DS}	$R_{DS(on)}$ max.	I_D
STB28N60M2	600 V	150 mΩ	22 A
STI28N60M2			
STP28N60M2			
STW28N60M2			

- Extremely low gate charge
- Excellent output capacitance (C_{oss}) profile
- 100% avalanche tested
- Zener-protected

Applications

- Switching applications

Description

These devices are N-channel Power MOSFETs developed using the MDmesh M2 technology. Thanks to their strip layout and improved vertical structure, these devices exhibit low on-resistance and optimized switching characteristics, rendering them suitable for the most demanding high-efficiency converters.

Product status links
STB28N60M2
STI28N60M2
STP28N60M2
STW28N60M2

1 Electrical ratings

Table 1. Absolute maximum ratings

Symbol	Parameter	Value	Unit
V_{DS}	Drain-source voltage	600	V
V_{GS}	Gate-source voltage	±25	V
I_D	Drain current (continuous) at T_C = 25 °C	22	A
I_D	Drain current (continuous) at T_C = 100 °C	14	A
I_{DM}(1)	Drain current (pulsed)	88	A
P_{TOT}	Total power dissipation at T_C = 25 °C	170	W
dv/dt(2)	Peak diode recovery voltage slope	15	V/ns
dv/dt(3)	MOSFET dv/dt ruggedness	50	V/ns
T_{stg}	Storage temperature range	-55 to 150	°C
T_J	Operating junction temperature range		

1. *Pulse width limited by safe operating area.*
2. *I_{SD} ≤ 22 A, di/dt ≤ 400 A/µs, V_{DS} (peak) < $V_{(BR)DSS}$, V_{DD} = 400 V.*
3. *V_{DS} = 480 V.*

Table 2. Thermal data

Symbol	Parameter	Value				Unit
		D^2PAK	I^2PAK	TO-220	TO-247	
R_{thJC}	Thermal resistance, junction-to-case	0.74				°C/W
R_{thJA}	Thermal resistance, junction-to-ambient	30(1)	62.5		50	°C/W

1. *When mounted on a standard 1 inch^2 area of FR-4 PCB with 2-oz copper.*

Table 3. Avalanche characteristics

Symbol	Parameter	Value	Unit
I_{AR}	Avalanche current, repetitive or not-repetitive (pulse width limited by T_J max.)	3.6	A
E_{AS}	Single pulse avalanche energy (starting T_J = 25 °C, I_D = I_{AR}, V_{DD} = 50 V)	350	mJ

2 Electrical characteristics

(T_C = 25 °C unless otherwise specified)

Table 4. On/off states

Symbol	Parameter	Test conditions	Min.	Typ.	Max.	Unit
$V_{(BR)DSS}$	Drain-source breakdown voltage	I_D = 1 mA, V_{GS} = 0 V	600	-	-	V
I_{DSS}	Zero gate voltage drain current	V_{GS} = 0 V, V_{DS} = 600 V	-	-	1	µA
		V_{GS} = 0 V, V_{DS} = 600 V, T_C = 125 °C(1)	-	-	100	µA
I_{GSS}	Gate body leakage current	V_{DS} = 0 V, V_{GS} = ±25 V	-	-	±10	µA
$V_{GS(th)}$	Gate threshold voltage	V_{DS} = V_{GS}, I_D = 250 µA	2	3	4	V
$R_{DS(on)}$	Static drain-source on-resistance	V_{GS} = 10 V, I_D = 11 A	-	135	150	mΩ

1. *Specified by design, not tested in production.*

Table 5. Dynamic

Symbol	Parameter	Test conditions	Min.	Typ.	Max.	Unit
C_{iss}	Input capacitance	V_{DS} = 100 V, f = 1 MHz, V_{GS} = 0 V	-	1440	-	pF
C_{oss}	Output capacitance		-	70	-	pF
C_{rss}	Reverse transfer capacitance		-	2	-	pF
$C_{oss\ eq.}$(1)	Equivalent capacitance time related	V_{DS} = 0 to 480 V, V_{GS} = 0 V	-	104	-	pF
Q_g	Total gate charge	V_{DD} = 480 V, I_D = 20 A, V_{GS} = 0 to 10 V (see the Figure 16. Test circuit for gate charge behavior)	-	36	-	nC
Q_{gs}	Gate-source charge		-	7.2	-	nC
Q_{gd}	Gate-drain charge		-	16	-	nC
R_g	Intrinsic gate resistance	f = 1 MHz, I_D = 0 A	-	5.5	-	Ω

1. *$C_{oss\ eq.}$ is defined as a constant equivalent capacitance giving the same charging time as C_{oss} when V_{DS} increases from 0 to 80% V_{DSS}.*

Table 6. Switching times

Symbol	Parameter	Test conditions	Min.	Typ.	Max.	Unit
$t_{d(on)}$	Turn-on delay time	V_{DD} = 300 V, I_D = 11 A, R_G = 4.7 Ω, V_{GS} = 10 V (see the Figure 15. Test circuit for resistive load switching times and Figure 20. Switching time waveform)	-	14.5	-	ns
t_r	Rise time		-	7.2	-	ns
$t_{d(off)}$	Turn-off delay time		-	100	-	ns
t_f	Fall time		-	8	-	ns

Table 7. Source-drain diode

Symbol	Parameter	Test conditions	Min.	Typ.	Max.	Unit
I_{SD}	Source-drain current		-	-	22	A
I_{SDM}[1]	Source-drain current (pulsed)		-	-	88	A
V_{SD}[2]	Forward on voltage	I_{SD} = 22 A, V_{GS} = 0 V	-	-	1.6	V
t_{rr}	Reverse recovery time	I_{SD} = 22 A, di/dt = 100 A/µs, V_{DD} = 60 V (see the Figure 17. Test circuit for inductive load switching and diode recovery times)	-	350	-	ns
Q_{rr}	Reverse recovery charge		-	4.7	-	µC
I_{RRM}	Reverse recovery current		-	27	-	A
t_{rr}	Reverse recovery time	I_{SD} = 22 A, di/dt = 100 A/µs, V_{DD} = 60 V, T_J = 150 °C (see the Figure 17. Test circuit for inductive load switching and diode recovery times)	-	451	-	ns
Q_{rr}	Reverse recovery charge		-	6.5	-	µC
I_{RRM}	Reverse recovery current		-	29	-	A

1. *Pulse width limited by safe operating area.*
2. *Pulsed: pulse duration = 300 µs, duty cycle 1.5%.*

2.1 Electrical characteristics (curves)

Figure 1. Safe operating area for D²PAK, I²PAK and TO-220

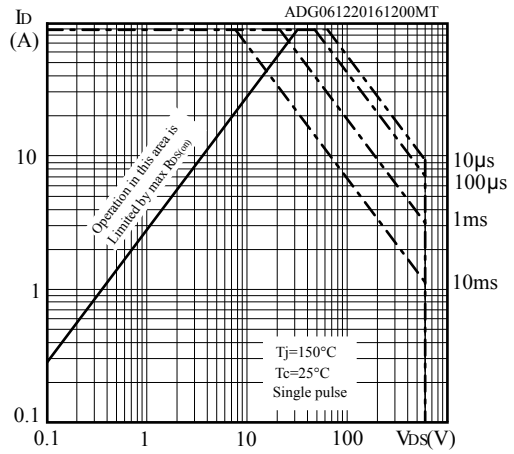

Figure 2. Normalized transient thermal impedance for D²PAK, I²PAK and TO-220

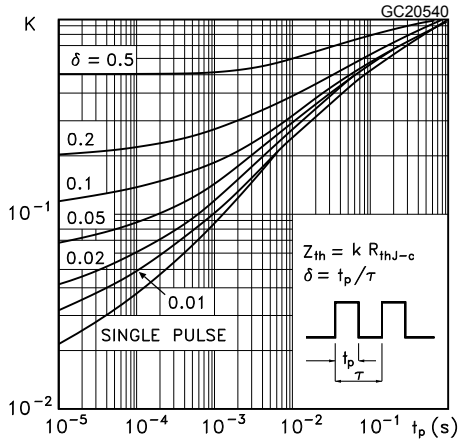

Figure 3. Safe operating area for TO-247

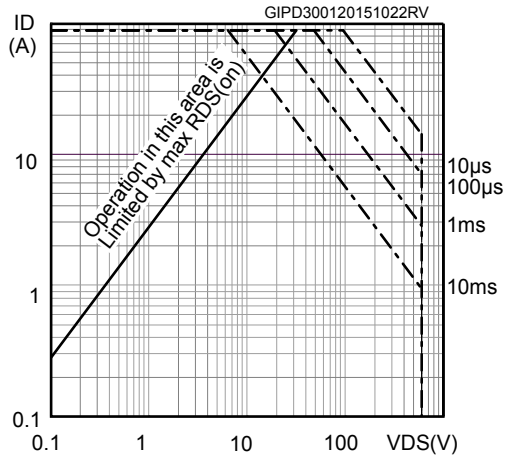

Figure 4. Normalized transient thermal impedance for TO-247

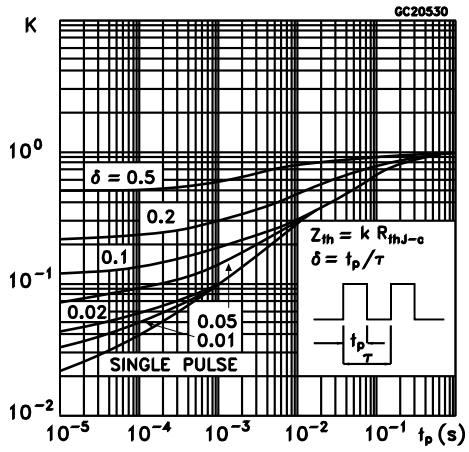

Figure 5. Typical output characteristics

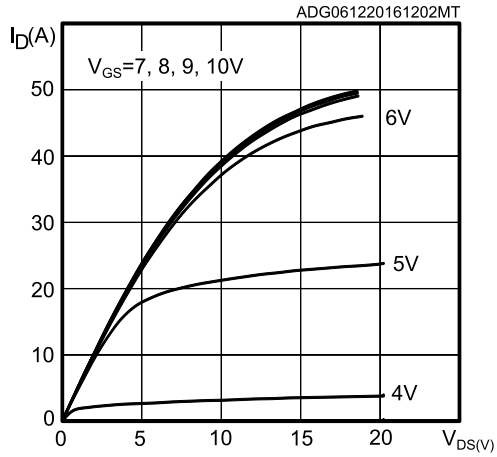

Figure 6. Typical transfer characteristics

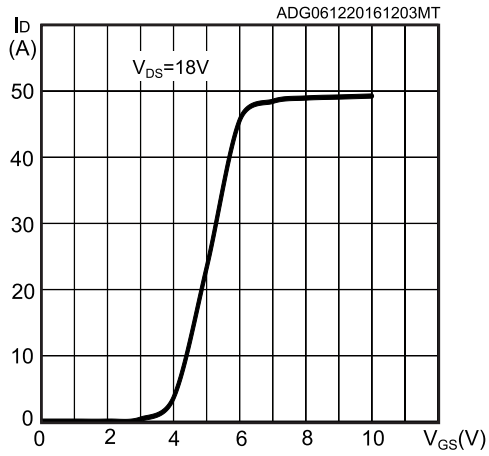

Figure 7. Typical gate charge characteristics

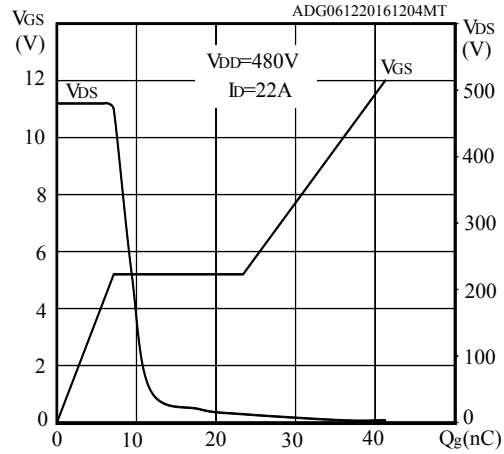

Figure 8. Typical capacitance characteristics

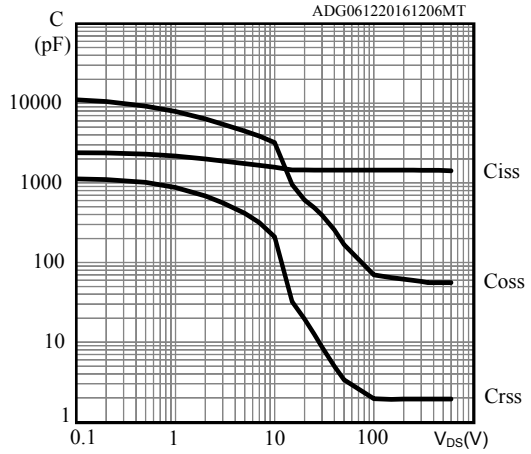

Figure 9. Typical drain-source on-resistance

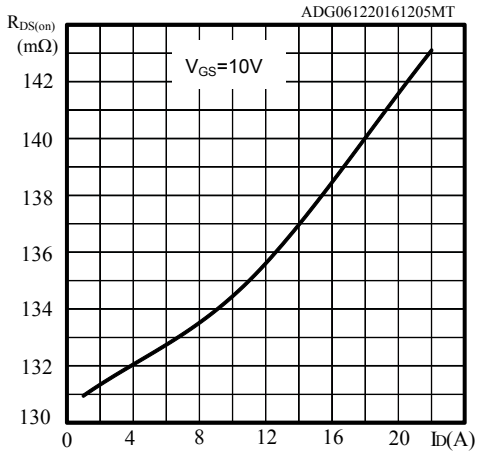

Figure 10. Normalized breakdown voltage vs temperature

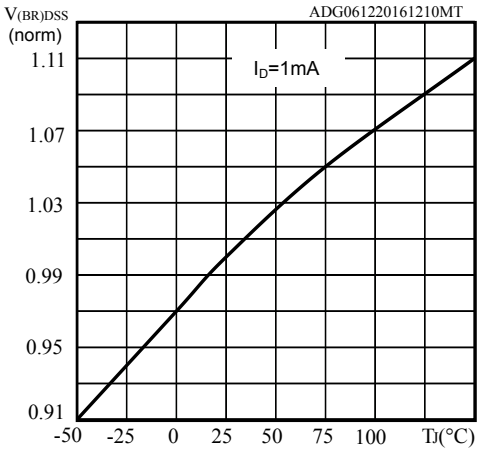

Figure 11. Normalized gate threshold vs temperature

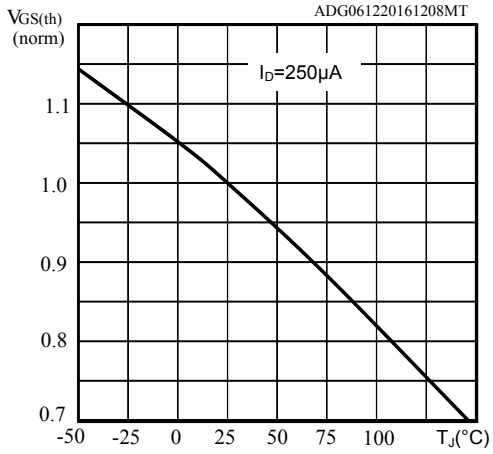

Figure 12. Normalized on-resistance vs temperature

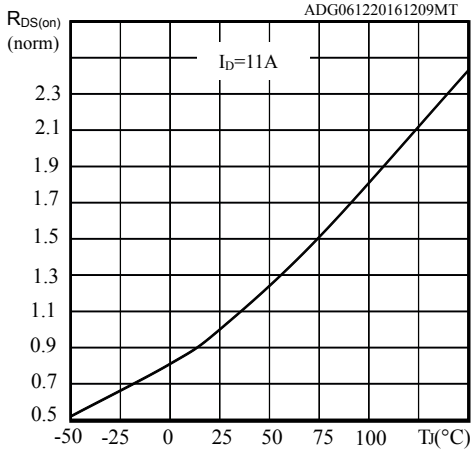

Figure 13. Typical reverse diode forward characteristics

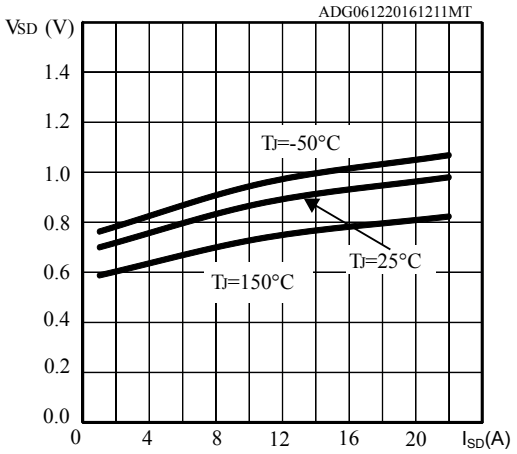

Figure 14. Output capacitance stored energy

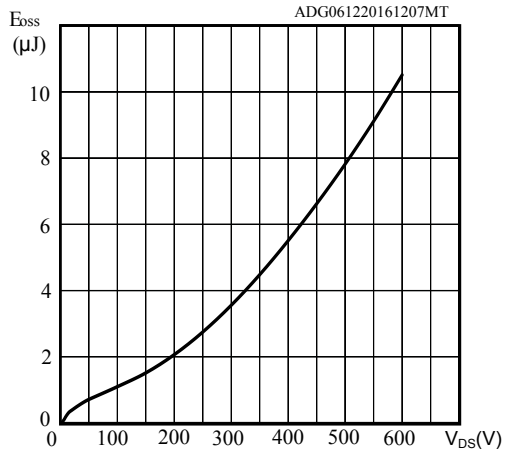

3 Test circuits

Figure 15. Test circuit for resistive load switching times

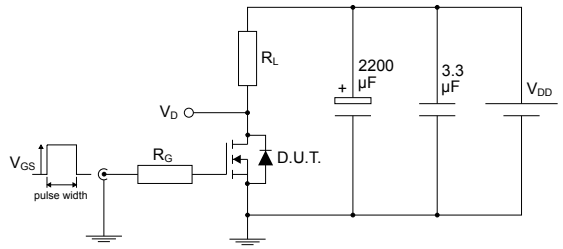

AM01468v1

Figure 16. Test circuit for gate charge behavior

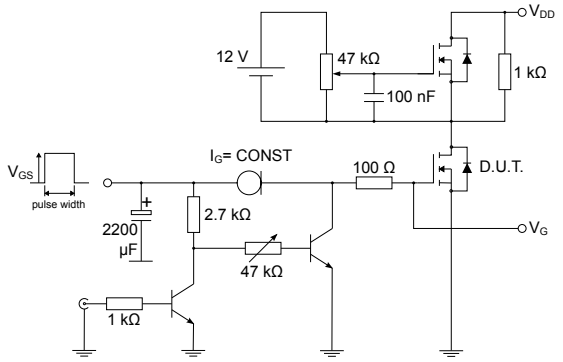

AM01469v1

Figure 17. Test circuit for inductive load switching and diode recovery times

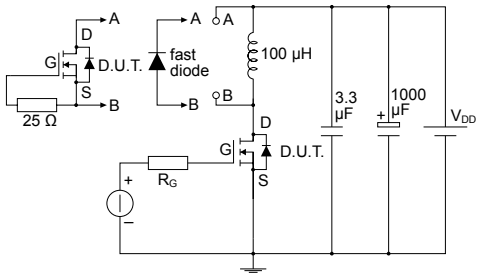

AM01470v1

Figure 18. Unclamped inductive load test circuit

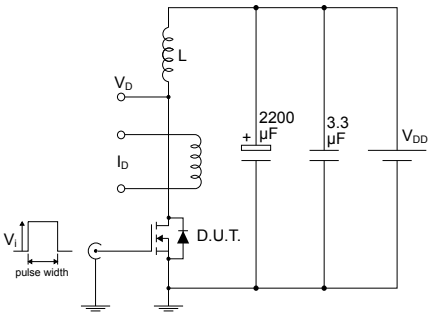

AM01471v1

Figure 19. Unclamped inductive waveform

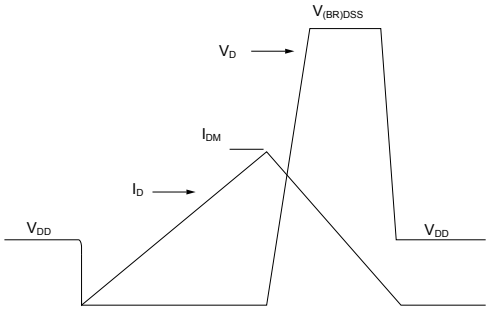

AM01472v1

Figure 20. Switching time waveform

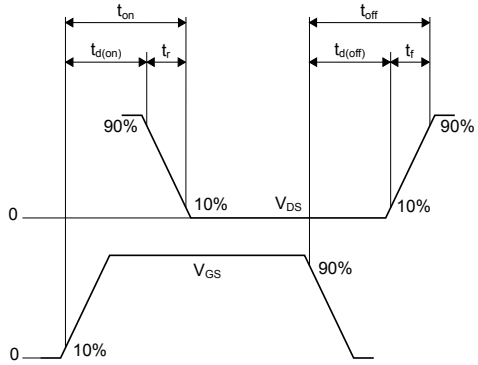

AM01473v1

4 Package information

To meet environmental requirements, ST offers these devices in different grades of ECOPACK packages, depending on their level of environmental compliance. ECOPACK specifications, grade definitions, and product status are available at: www.st.com. ECOPACK is an ST trademark.

4.1 D²PAK (TO-263) type A package information

Figure 21. D²PAK (TO-263) type A package outline

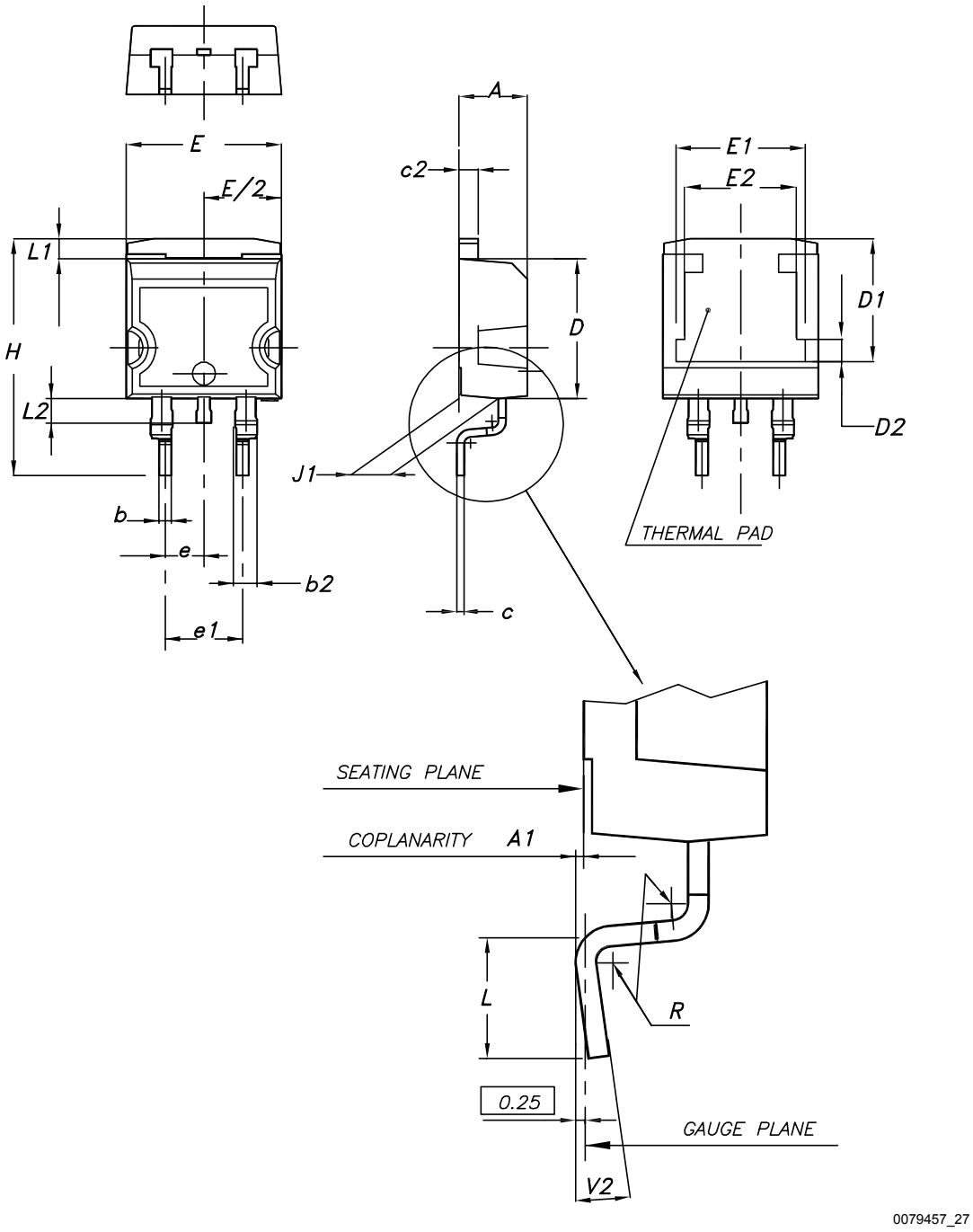

Table 8. D²PAK (TO-263) type A package mechanical data

Dim.	mm		
	Min.	Typ.	Max.
A	4.40		4.60
A1	0.03		0.23
b	0.70		0.93
b2	1.14		1.70
c	0.45		0.60
c2	1.23		1.36
D	8.95		9.35
D1	7.50	7.75	8.00
D2	1.10	1.30	1.50
E	10.00		10.40
E1	8.30	8.50	8.70
E2	6.85	7.05	7.25
e		2.54	
e1	4.88		5.28
H	15.00		15.85
J1	2.49		2.69
L	2.29		2.79
L1	1.27		1.40
L2	1.30		1.75
R		0.40	
V2	0°		8°

Figure 22. D²PAK (TO-263) recommended footprint (dimensions are in mm)

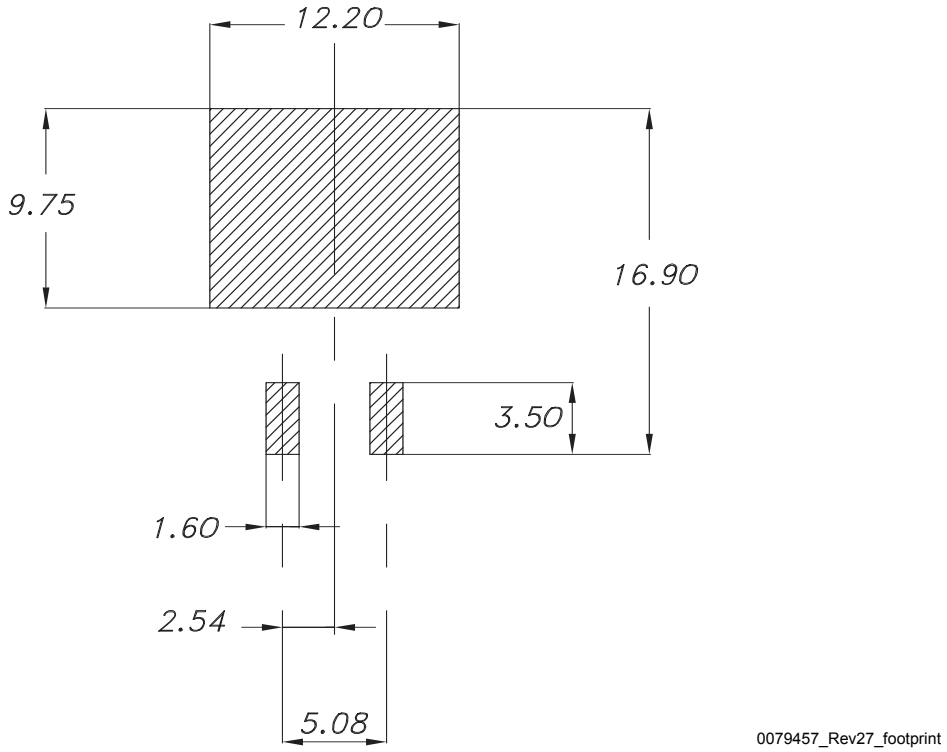

4.2 I²PAK package information

Figure 23. I²PAK package outline

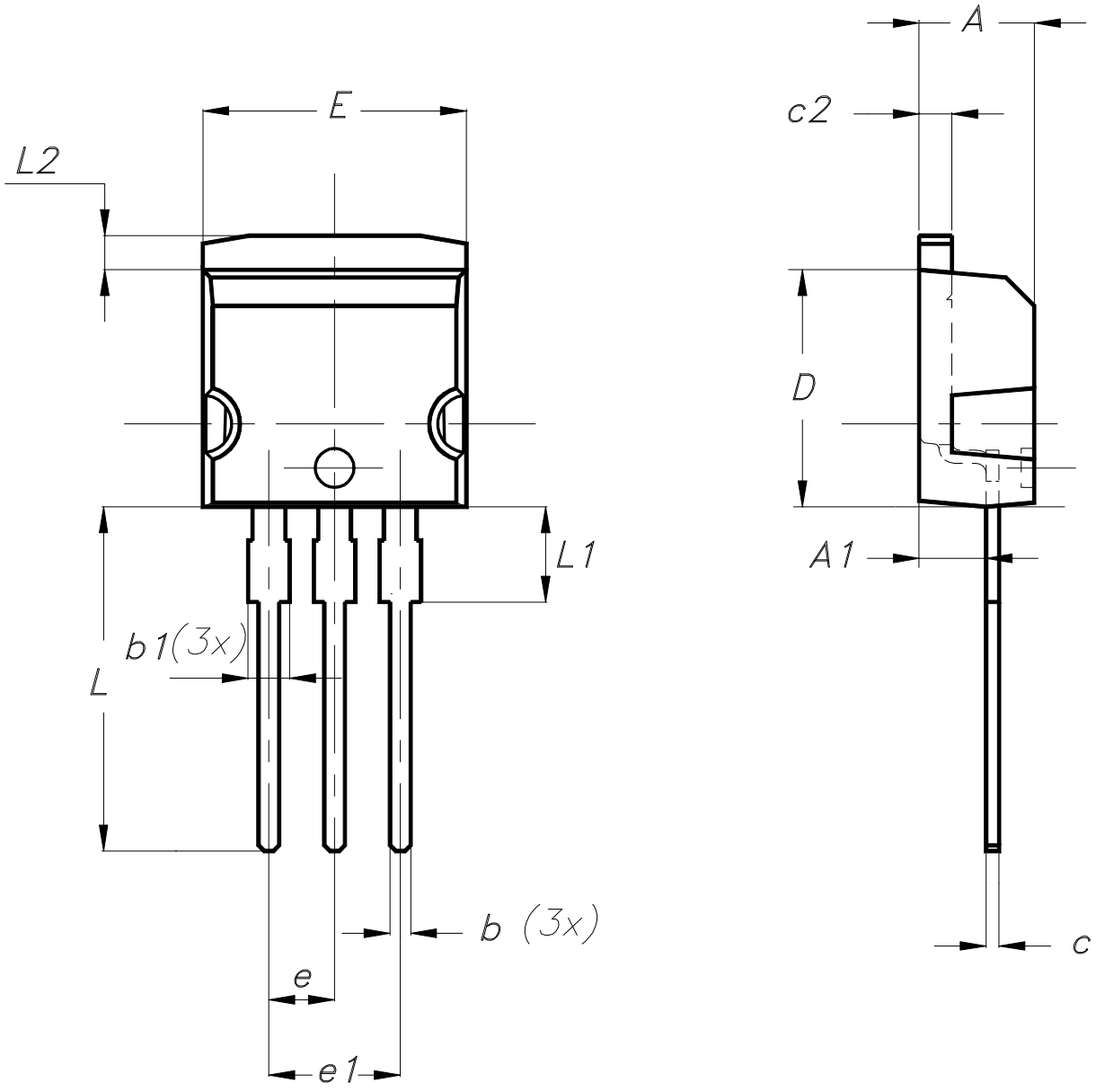

0004982_Rev_10

Table 9. I²PAK package mechanical data

Dim.	mm	
	Min.	Max.
A	4.40	4.60
A1	2.40	2.72
b	0.61	0.88
b1	1.14	1.70
c	0.49	0.70
c2	1.23	1.32
D	8.95	9.35
e	2.40	2.70
e1	4.95	5.15
E	10.00	10.40
L	13.00	14.00
L1	3.50	3.93
L2	1.27	1.40

4.3 TO-220 type A package information

Figure 24. TO-220 type A package outline

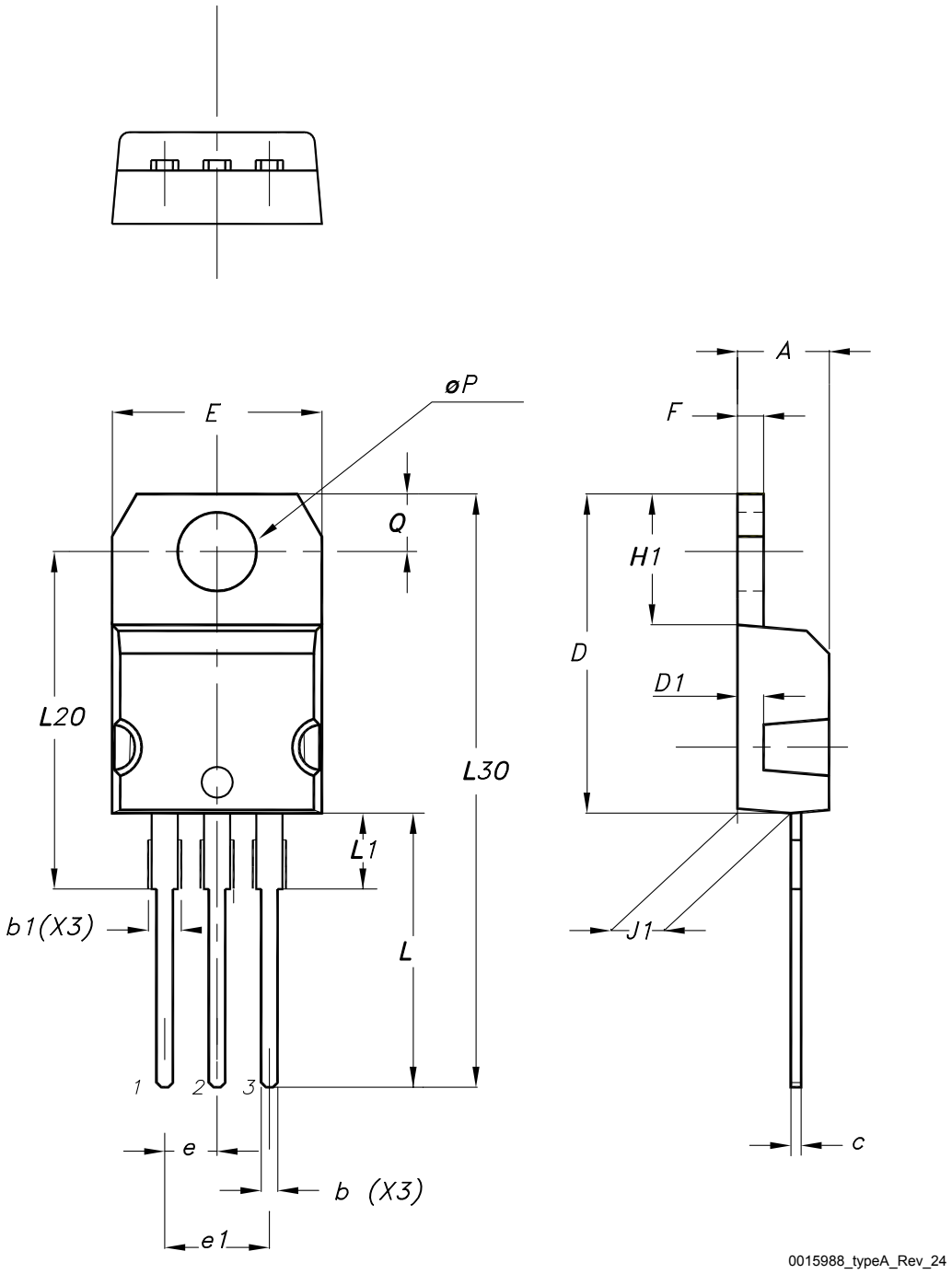

Table 10. **TO-220 type A package mechanical data**

Dim.	mm		
	Min.	Typ.	Max.
A	4.40		4.60
b	0.61		0.88
b1	1.14		1.55
c	0.48		0.70
D	15.25		15.75
D1		1.27	
E	10.00		10.40
e	2.40		2.70
e1	4.95		5.15
F	1.23		1.32
H1	6.20		6.60
J1	2.40		2.72
L	13.00		14.00
L1	3.50		3.93
L20		16.40	
L30		28.90	
øP	3.75		3.85
Q	2.65		2.95
Slug flatness		0.03	0.10

4.4 TO-247 package information

Figure 25. TO-247 package outline

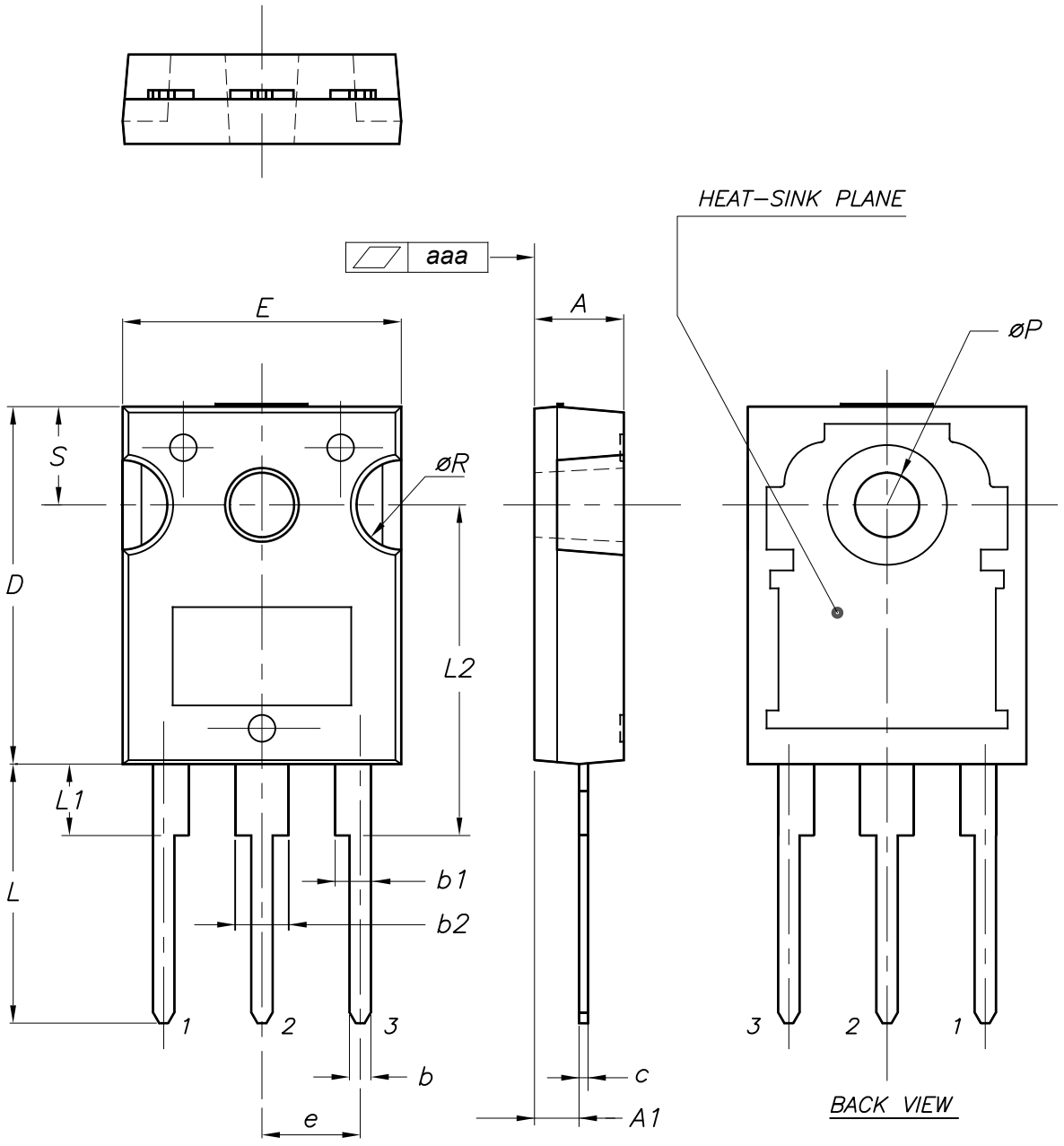

0075325_10

Table 11. **TO-247 package mechanical data**

Dim.	mm		
	Min.	Typ.	Max.
A	4.85		5.15
A1	2.20		2.60
b	1.0		1.40
b1	2.0		2.40
b2	3.0		3.40
c	0.40		0.80
D	19.85		20.15
E	15.45		15.75
e	5.30	5.45	5.60
L	14.20		14.80
L1	3.70		4.30
L2		18.50	
ØP	3.55		3.65
ØR	4.50		5.50
S	5.30	5.50	5.70
aaa		0.04	0.10

4.5 D²PAK packing information

Figure 26. D²PAK tape drawing (dimensions are in mm)

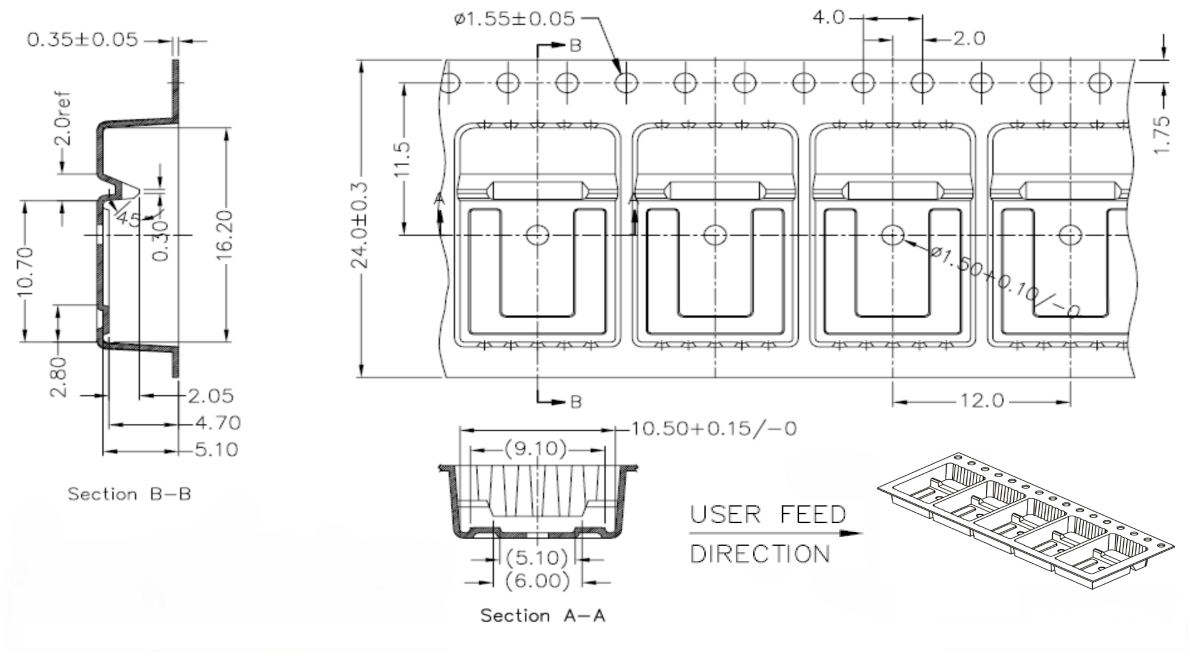

5 Ordering information

Table 12. **Order codes**

Order codes	Marking	Package	Packing
STB28N60M2	28N60M2	D²PAK	Tape and reel
STI28N60M2		I²PAK	Tube
STP28N60M2		TO-220	
STW28N60M2		TO-247	

Revision history

Table 13. Document revision history

Date	Revision	Changes
13-Sep-2013	1	First release.
29-Jan-2014	2	Modified: title, ID value and features in cover page. Modified: ID, IDM and PTOT values in *Table 2*. Modified: note 2. Modified: Rthj-case value in *Table 3*. Modified: the entire typical values in *Table 4*, *6*, *7* and *8*. Modified: RDS(on) typical value in *Table 5*. Modified: *Figure 9* and *10*. Added: *Section 4: Package information*. Minor text changes.
09-Feb-2015	3	Updated title and description. Updated *Table 2: Absolute maximum ratings* and *Table 4: Avalanche characteristics*. Updated *Figure 5: Thermal impedance for TO-247* and *Figure 6: Output characteristics*. Updated *Section 4: Package information*. Minor text changes.
14-Mar-2017	4	Added part number STI28N60M2. Updated title, silhouette, features and *Table 1: Device summary* in cover page. Updated *Table 3: Thermal data* and *Section 4: Package information*. Minor text changes.
17-Sep-2025	5	Updated Section 4: Package information. Minor text changes.

Contents

1 Electrical ratings 2

2 Electrical characteristics 3

2.1 Electrical characteristics (curves) 5

3 Test circuits 8

4 Package information 9

4.1 D²PAK (TO-263) type A package information 9

4.2 I²PAK package information 12

4.3 TO-220 type A package information 14

4.4 TO-247 package information 16

4.5 D²PAK packing information 18

5 Ordering information 19

Revision history 20

IMPORTANT NOTICE – READ CAREFULLY

STMicroelectronics NV and its subsidiaries (“ST”) reserve the right to make changes, corrections, enhancements, modifications, and improvements to ST products and/or to this document at any time without notice.

In the event of any conflict between the provisions of this document and the provisions of any contractual arrangement in force between the purchasers and ST, the provisions of such contractual arrangement shall prevail.

The purchasers should obtain the latest relevant information on ST products before placing orders. ST products are sold pursuant to ST’s terms and conditions of sale in place at the time of order acknowledgment.

The purchasers are solely responsible for the choice, selection, and use of ST products and ST assumes no liability for application assistance or the design of the purchasers’ products.

No license, express or implied, to any intellectual property right is granted by ST herein.

Resale of ST products with provisions different from the information set forth herein shall void any warranty granted by ST for such product.

If the purchasers identify an ST product that meets their functional and performance requirements but that is not designated for the purchasers' market segment, the purchasers shall contact ST for more information.

ST and the ST logo are trademarks of ST. For additional information about ST trademarks, refer to www.st.com/trademarks. All other product or service names are the property of their respective owners.

Information in this document supersedes and replaces information previously supplied in any prior versions of this document.

© 2025 STMicroelectronics – All rights reserved