STB28N60DM2, STP28N60DM2, STW28N60DM2

Datasheet

N-channel 600 V, 126 mΩ typ., 21 A MDmesh DM2 Power MOSFETs in D²PAK, TO-220 and TO-247 packages

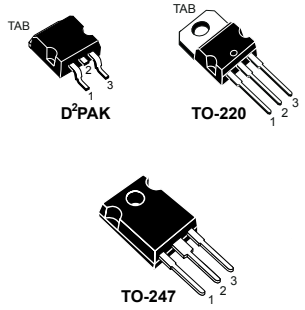

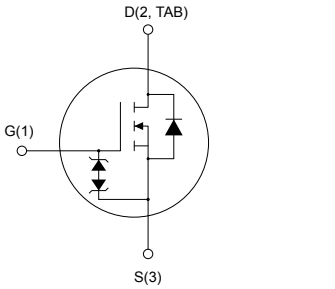

Features

Order code	V_{DS}	$R_{DS(on)}$ max.	I_D
STB28N60DM2	600 V	160 mΩ	21 A
STP28N60DM2			
STW28N60DM2			

- Fast-recovery body diode
- Extremely low gate charge and input capacitance
- Low on-resistance
- 100% avalanche tested
- Extremely high dv/dt ruggedness
- Zener-protected

Applications

- Switching applications

Description

These high-voltage N-channel Power MOSFET are part of the MDmesh DM2 fast-recovery diode series. They offer very low recovery charge (Q_{rr}) and time (t_{rr}) combined with low $R_{DS(on)}$, rendering them suitable for the most demanding high-efficiency converters and ideal for bridge topologies and ZVS phase-shift converters.

Product status links
STB28N60DM2
STP28N60DM2
STW28N60DM2

1 Electrical ratings

Table 1. Absolute maximum ratings

Symbol	Parameter	Value	Unit
V_{GS}	Gate-source voltage	±25	V
I_D	Drain current (continuous) at T_C = 25 °C	21	A
	Drain current (continuous) at T_C = 100 °C	14	
I_{DM}(1)	Drain current (pulsed)	84	A
P_{TOT}	Total power dissipation at T_C = 25 °C	170	W
dv/dt(2)	Peak diode recovery voltage slope	50	V/ns
dv/dt(3)	MOSFET dv/dt ruggedness	50	V/ns
T_{stg}	Storage temperature range	-55 to 150	°C
T_J	Operating junction temperature range		°C

1. *Pulse width limited by safe operating area.*
2. *I_{SD} ≤ 21 A, V_{DS} (peak) < $V_{(BR)DSS}$, di/dt = 900 A/µs, V_{DD} = 400 V.*
3. *V_{DD} = 480 V*

Table 2. Thermal data

Symbol	Parameter	Value			Unit
		D^2PAK	TO-220	TO-247	
R_{thJC}	Thermal resistance, junction-to-case	0.74			°C/W
R_{thJA}	Thermal resistance, junction-to-ambient	30(1)	62.5	50	°C/W

1. *When mounted on a standard 1 inch^2 area of FR-4 PCB with 2-oz copper.*

Table 3. Avalanche characteristics

Symbol	Parameter	Value	Unit
I_{AR}	Avalanche current, repetitive or not-repetitive (pulse width limited by T_J max.)	4	A
E_{AS}	Single pulse avalanche energy (starting T_J = 25 °C, I_D = I_{AR}, V_{DD} = 50 V)	350	mJ

2 Electrical characteristics

T_C = 25 °C unless otherwise specified.

Table 4. On/off states

Symbol	Parameter	Test condition	Min.	Typ.	Max.	Unit
$V_{(BR)DSS}$	Drain-source breakdown voltage	I_D = 1 mA, V_{GS} = 0 V	600			V
I_{DSS}	Zero gate voltage drain current	V_{GS} = 0 V, V_{DS} = 600 V			1	µA
		V_{GS} = 0 V, V_{DS} = 600 V, T_C = 125 °C[1]			100	µA
I_{GSS}	Gate body leakage current	V_{DS} = 0 V, V_{GS} = ±25 V			±10	µA
$V_{GS(th)}$	Gate threshold voltage	V_{DS} = V_{GS}, I_D = 250 µA	3	4	5	V
$R_{DS(on)}$	Static drain-source on-resistance	V_{GS} = 10 V, I_D = 10.5 A		126	160	mΩ

1. *Specified by design, not tested in production.*

Table 5. Dynamic

Symbol	Parameter	Test condition	Min.	Typ.	Max.	Unit
C_{iss}	Input capacitance	V_{DS} = 100 V, f = 1 MHz, V_{GS} = 0 V	-	1500	-	pF
C_{oss}	Output capacitance		-	70	-	pF
C_{rss}	Reverse transfer capacitance		-	1.6	-	pF
$C_{oss\ eq.}$[1]	Equivalent output capacitance time related	V_{DS} = 0 to 480 V, V_{GS} = 0 V	-	134	-	pF
R_g	Gate input resistance	f = 1 MHz open drain	-	4.6	-	Ω
Q_g	Total gate charge	V_{DD} = 480 V, I_D = 21 A, V_{GS} = 0 to 10 V (see Figure 18. Test circuit for gate charge behavior)	-	34	-	nC
Q_{gs}	Gate-source charge		-	8	-	nC
Q_{gd}	Gate-drain charge		-	18.5	-	nC

1. *$C_{oss\ eq}$ is defined as a constant equivalent capacitance giving the same charging time as C_{oss} when V_{DS} increases from 0 to stated value.*

Table 6. Switching times

Symbol	Parameter	Test conditions	Min.	Typ.	Max.	Unit
$t_{d(on)}$	Turn-on delay time	V_{DD} = 300 V, I_D = 10.5 A, R_G = 4.7 Ω , V_{GS} = 10 V (see Figure 17. Test circuit for resistive load switching times and Figure 22. Switching time waveform)	-	16	-	ns
t_r	Rise time		-	7.3	-	ns
$t_{d(off)}$	Turn-off delay time		-	53	-	ns
t_f	Fall time		-	9.3	-	ns

Table 7. Source-drain diode

Symbol	Parameter	Test condition	Min.	Typ.	Max.	Unit
I_{SD}	Source-drain current		-		21	A
I_{SDM}[1]	Source-drain current (pulsed)		-		84	A
V_{SD}[2]	Forward on voltage	I_{SD} = 21 A, V_{GS} = 0 V	-		1.6	V
t_{rr}	Reverse recovery time	I_{SD} = 21 A, di/dt = 100 A/µs	-	140		ns
Q_{rr}	Reverse recovery charge	V_{DD} = 60 V (see Figure 19. Test circuit for inductive load switching and diode recovery times)	-	0.5		µC
I_{RRM}	Reverse recovery current		-	7.4		A
t_{rr}	Reverse recovery time	I_{SD} = 21 A, di/dt = 100 A/µs	-	309		ns
Q_{rr}	Reverse recovery charge	V_{DD} = 60 V, T_J = 150 °C (see Figure 19. Test circuit for inductive load switching and diode recovery times)	-	2.6		µC
I_{RRM}	Reverse recovery current		-	16.8		A

1. *Pulse width limited by safe operating area.*
2. *Pulsed: pulse duration = 300 µs, duty cycle 1.5%.*

2.1 Electrical characteristics (curves)

Figure 1. Safe operating area for D²PAK

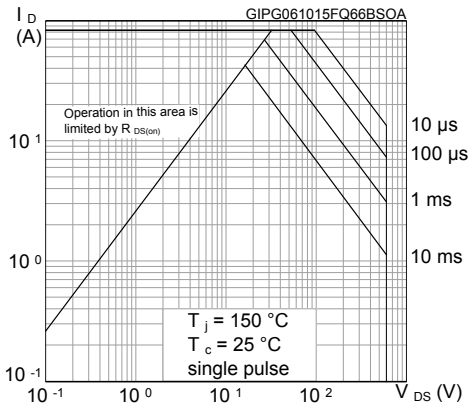

Figure 2. Normalized transient thermal impedance for D²PAK

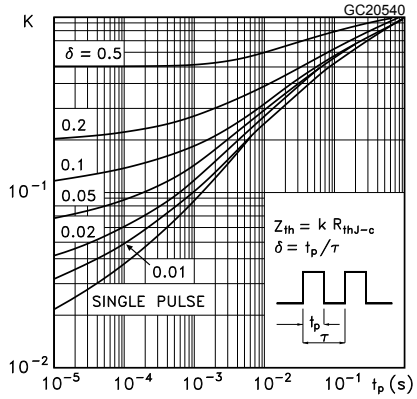

Figure 3. Safe operating area for TO-220

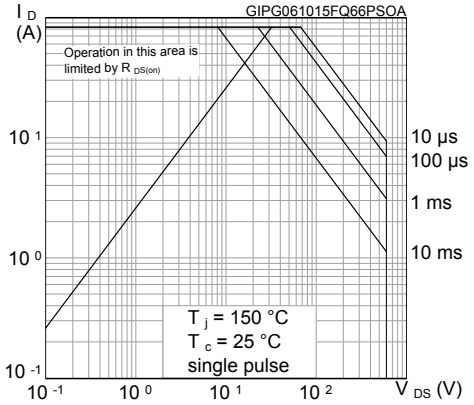

Figure 4. Normalized transient thermal impedance for TO-220

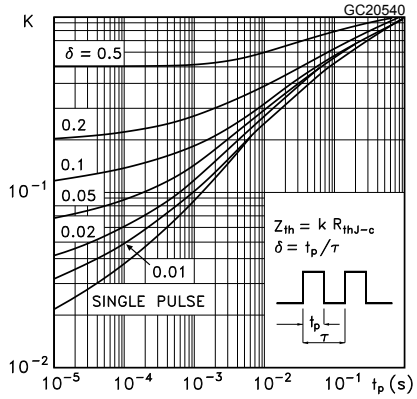

Figure 5. Safe operating area for TO-247

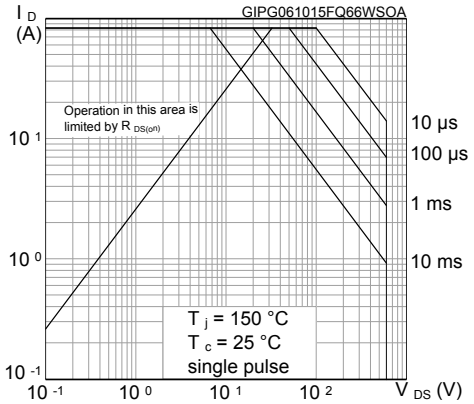

Figure 6. Normalized transient thermal impedance for TO-247

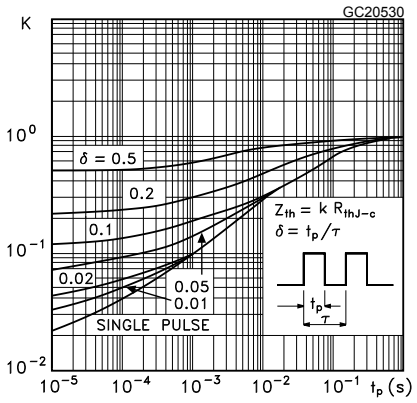

Figure 7. Typical output characteristics

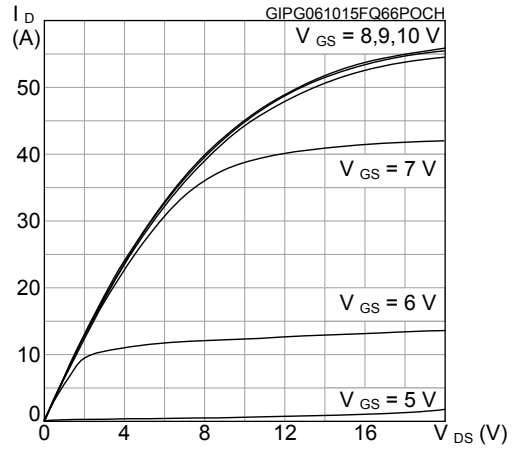

Figure 8. Typical transfer characteristics

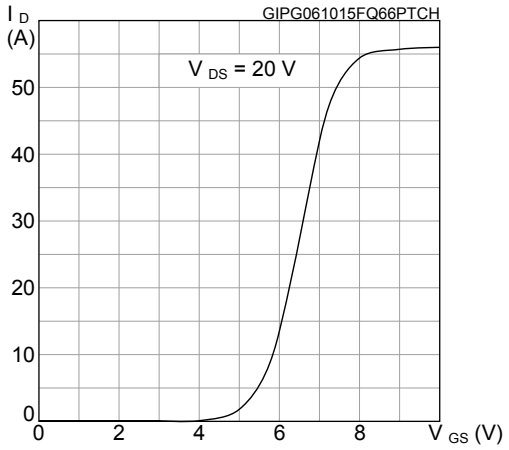

Figure 9. Typical gate charge vs gate-source voltage

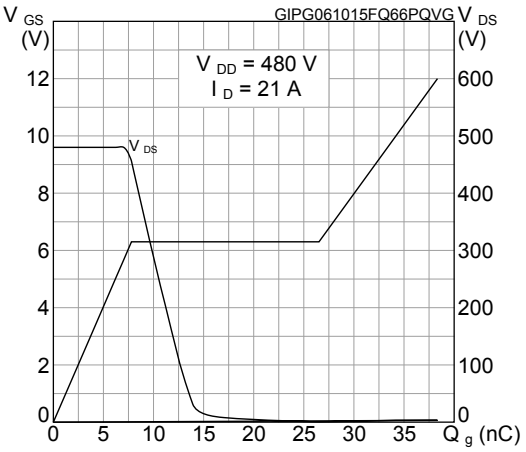

Figure 10. Typical static drain-source on-resistance

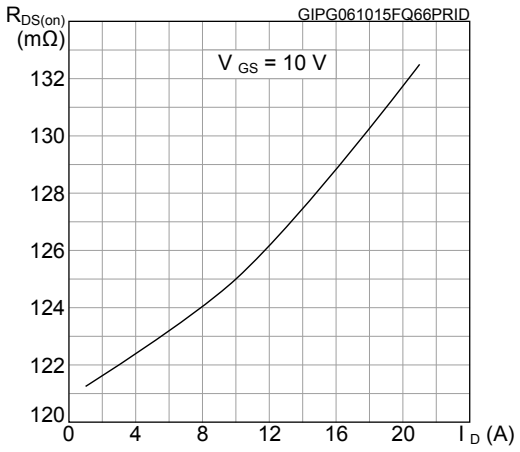

Figure 11. Typical capacitance variations

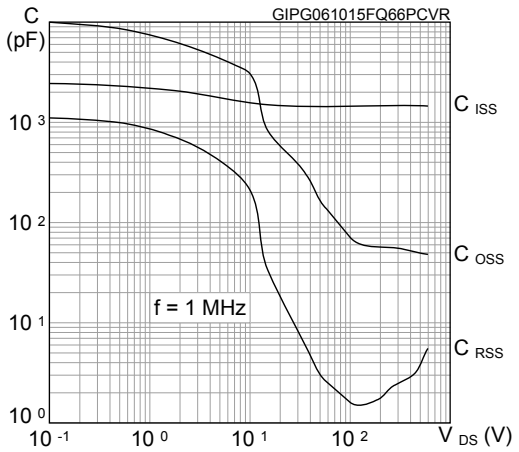

Figure 12. Typical output capacitance stored energy

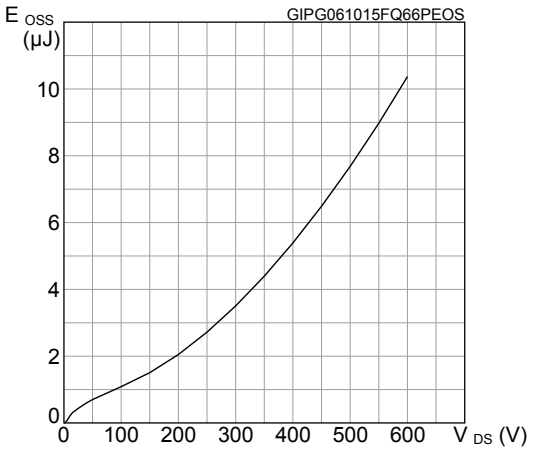

Figure 13. Normalized gate threshold vs temperature

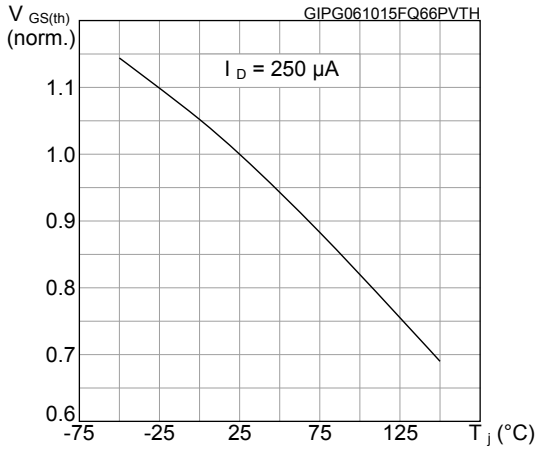

Figure 14. Normalized on-resistance vs temperature

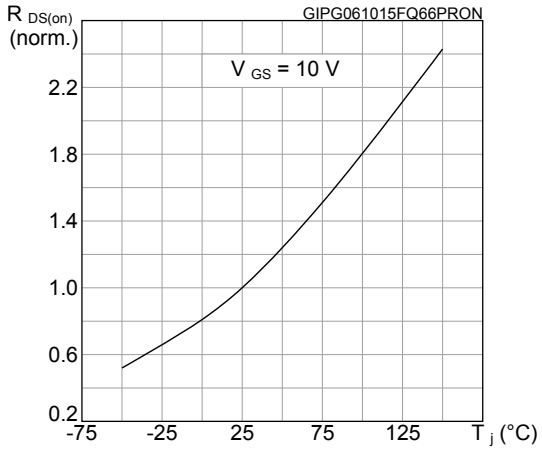

Figure 15. Typical reverse diode forward characteristics

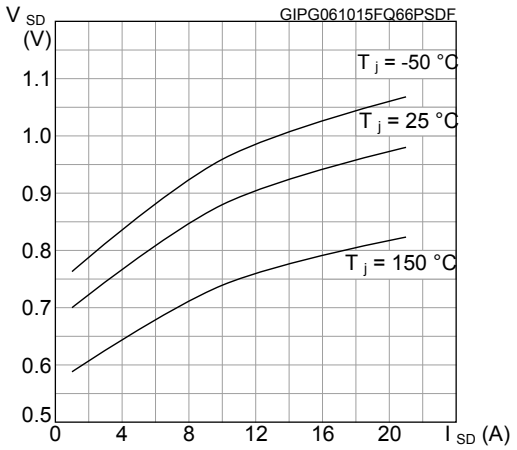

Figure 16. Normalized breakdown voltage vs temperature

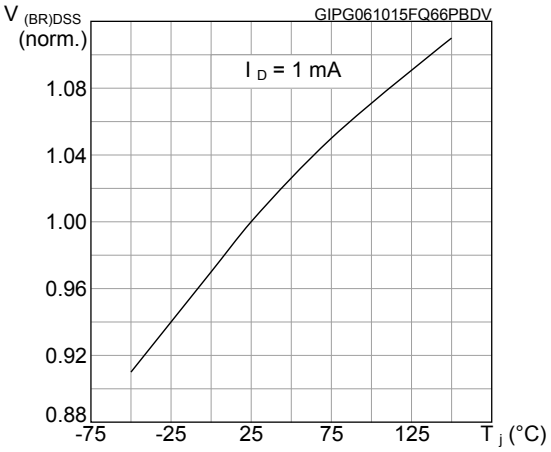

3 Test circuits

Figure 17. Test circuit for resistive load switching times

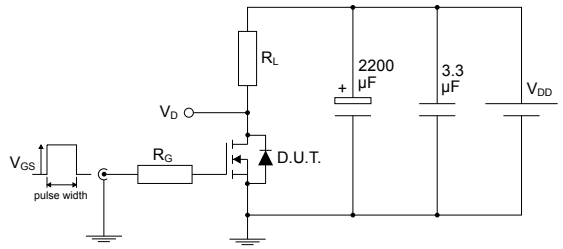

AM01468v1

Figure 18. Test circuit for gate charge behavior

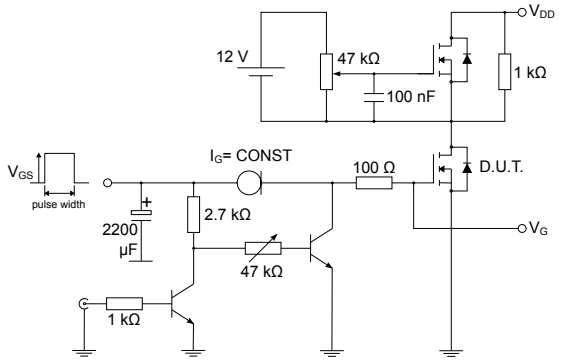

AM01469v1

Figure 19. Test circuit for inductive load switching and diode recovery times

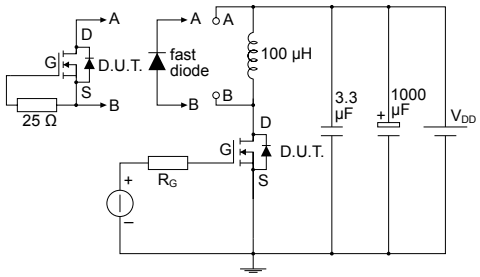

AM01470v1

Figure 20. Unclamped inductive load test circuit

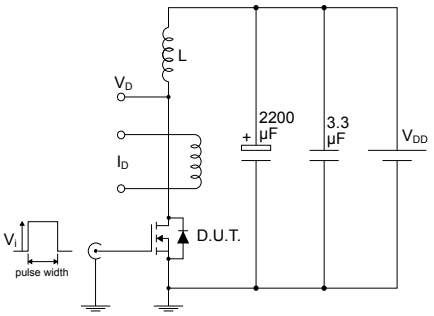

AM01471v1

Figure 21. Unclamped inductive waveform

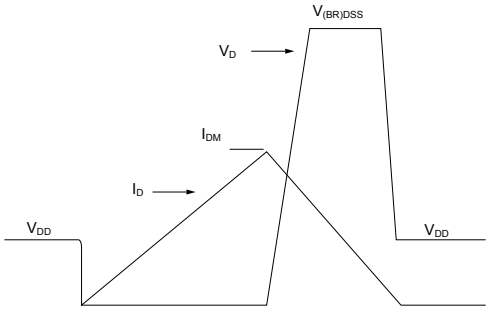

AM01472v1

Figure 22. Switching time waveform

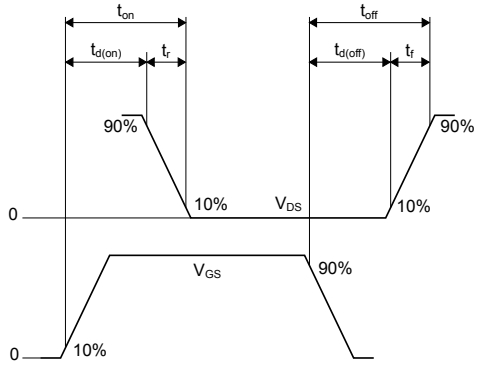

AM01473v1

4 Package information

To meet environmental requirements, ST offers these devices in different grades of ECOPACK packages, depending on their level of environmental compliance. ECOPACK specifications, grade definitions, and product status are available at: www.st.com. ECOPACK is an ST trademark.

4.1 D²PAK (TO-263) type A package information

Figure 23. D²PAK (TO-263) type A package outline

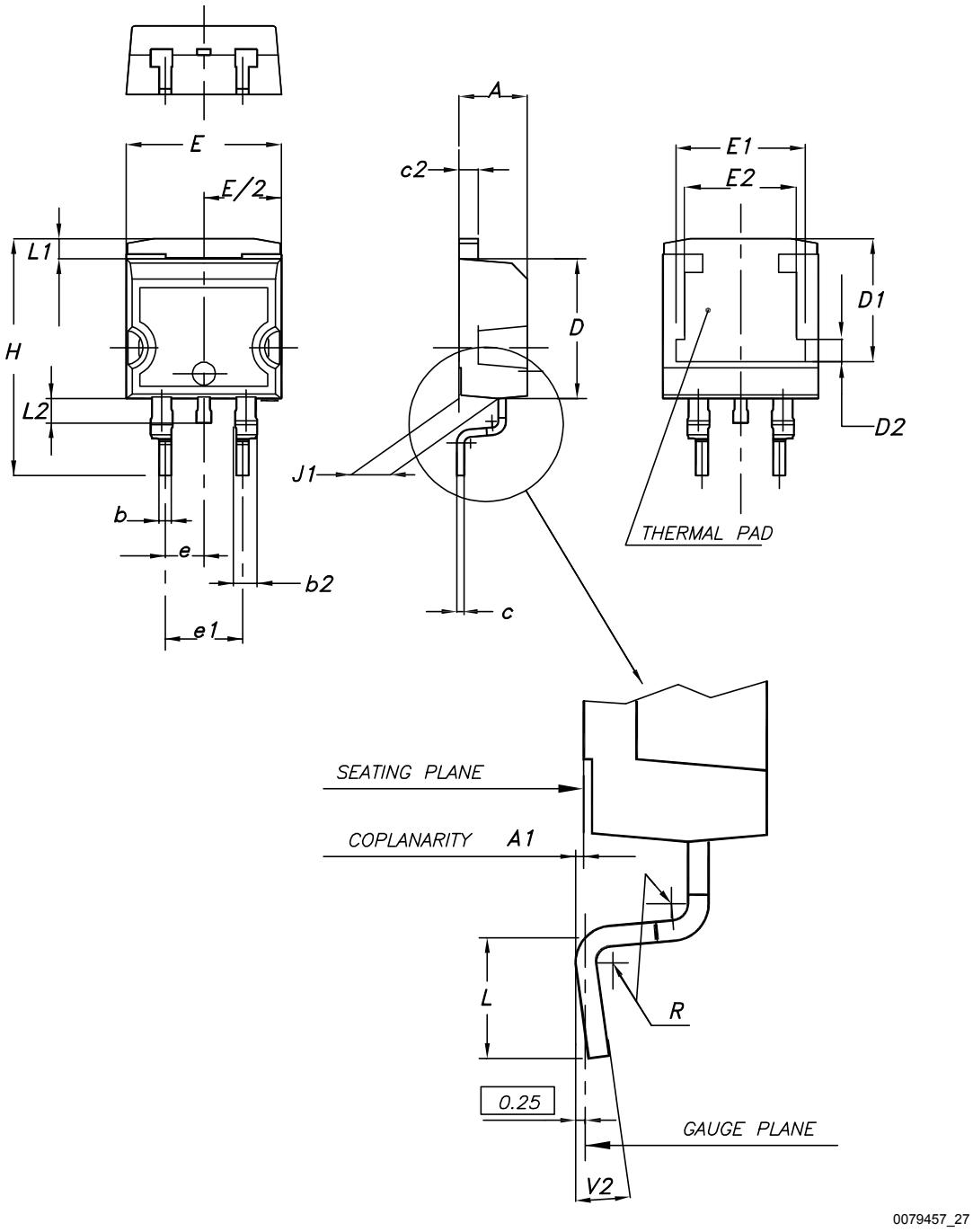

Table 8. D²PAK (TO-263) type A package mechanical data

Dim.	mm		
	Min.	Typ.	Max.
A	4.40		4.60
A1	0.03		0.23
b	0.70		0.93
b2	1.14		1.70
c	0.45		0.60
c2	1.23		1.36
D	8.95		9.35
D1	7.50	7.75	8.00
D2	1.10	1.30	1.50
E	10.00		10.40
E1	8.30	8.50	8.70
E2	6.85	7.05	7.25
e		2.54	
e1	4.88		5.28
H	15.00		15.85
J1	2.49		2.69
L	2.29		2.79
L1	1.27		1.40
L2	1.30		1.75
R		0.40	
V2	0°		8°

Figure 24. D²PAK (TO-263) recommended footprint (dimensions are in mm)

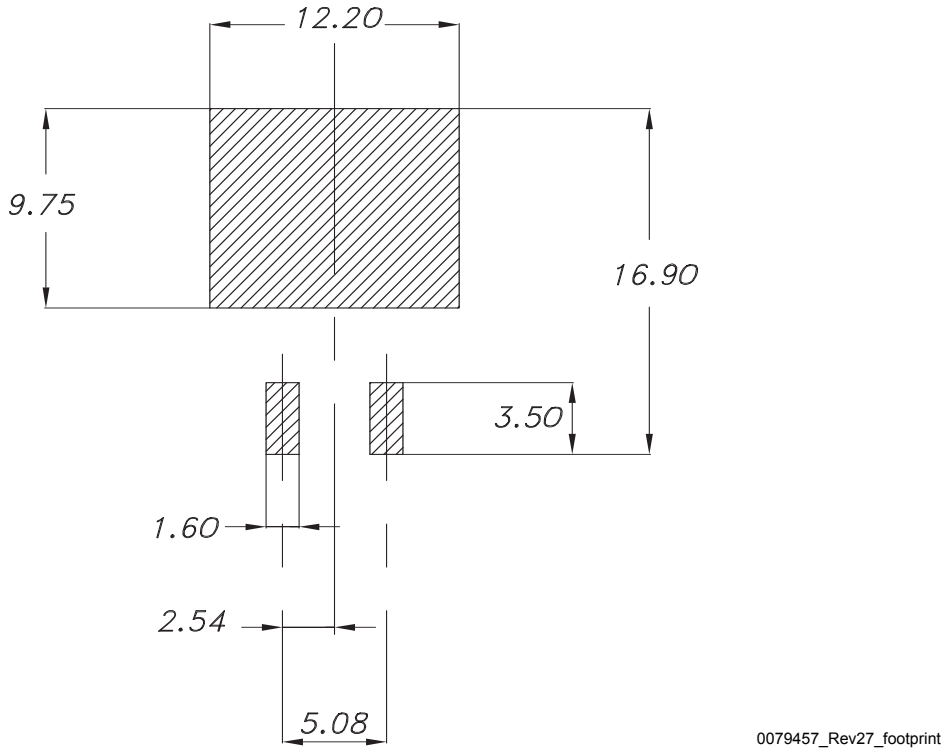

4.2 TO-220 type A package information

Figure 25. TO-220 type A package outline

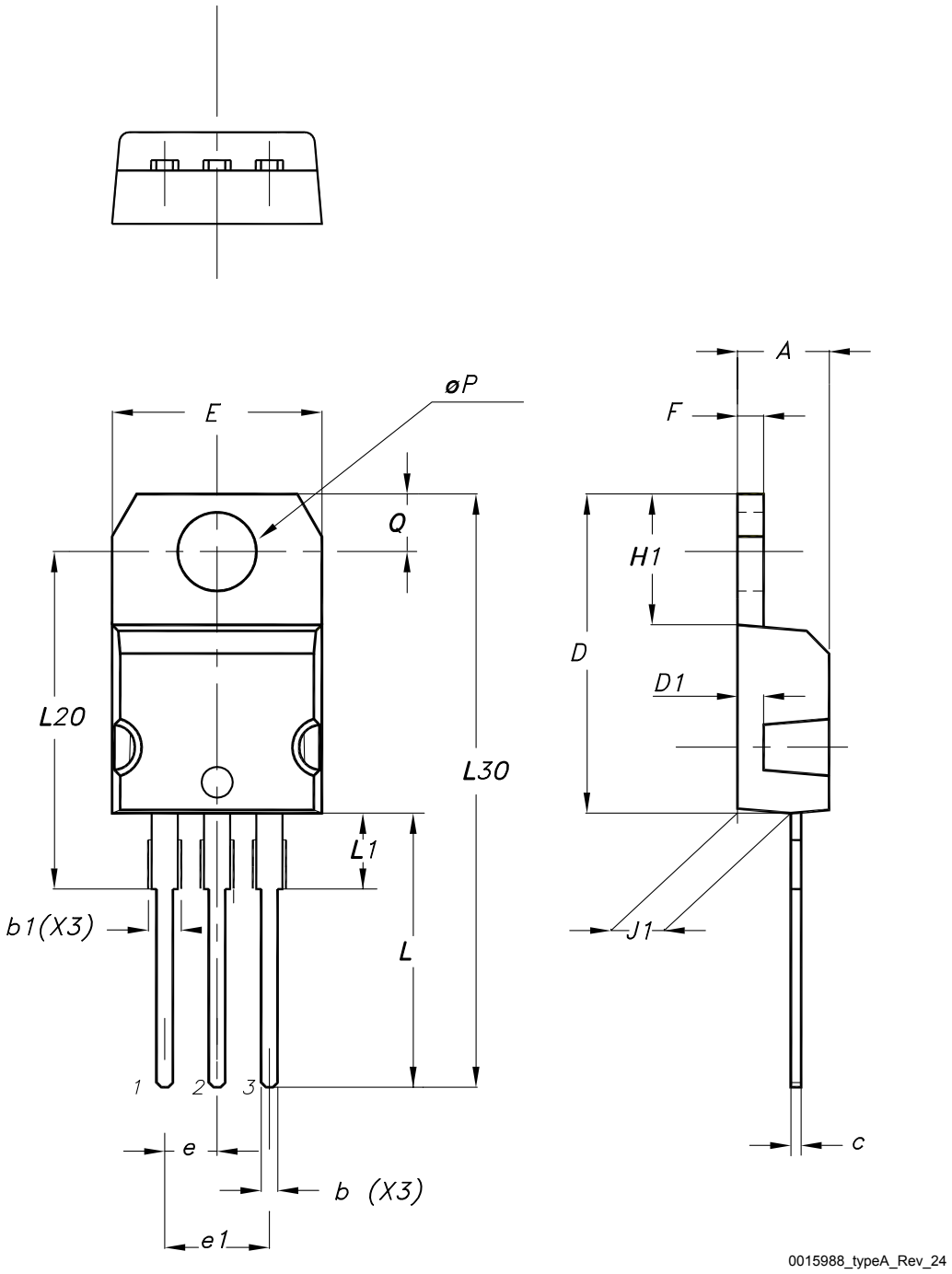

Table 9. TO-220 type A package mechanical data

Dim.	mm		
	Min.	Typ.	Max.
A	4.40		4.60
b	0.61		0.88
b1	1.14		1.55
c	0.48		0.70
D	15.25		15.75
D1		1.27	
E	10.00		10.40
e	2.40		2.70
e1	4.95		5.15
F	1.23		1.32
H1	6.20		6.60
J1	2.40		2.72
L	13.00		14.00
L1	3.50		3.93
L20		16.40	
L30		28.90	
øP	3.75		3.85
Q	2.65		2.95
Slug flatness		0.03	0.10

4.3 TO-247 package information

Figure 26. TO-247 package outline

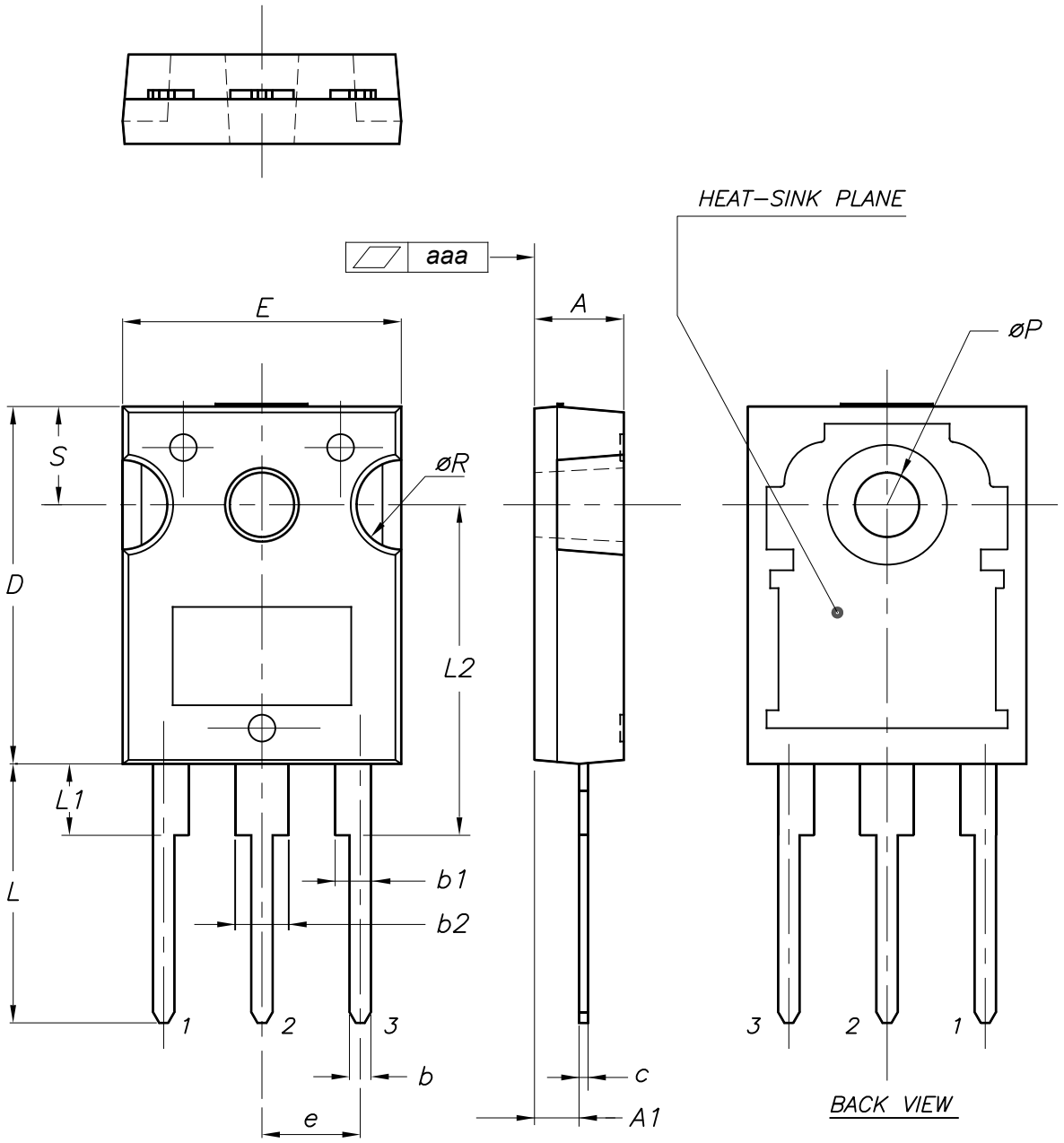

0075325_10

Table 10. **TO-247 package mechanical data**

Dim.	mm		
	Min.	Typ.	Max.
A	4.85		5.15
A1	2.20		2.60
b	1.0		1.40
b1	2.0		2.40
b2	3.0		3.40
c	0.40		0.80
D	19.85		20.15
E	15.45		15.75
e	5.30	5.45	5.60
L	14.20		14.80
L1	3.70		4.30
L2		18.50	
ØP	3.55		3.65
ØR	4.50		5.50
S	5.30	5.50	5.70
aaa		0.04	0.10

4.4 D²PAK packing information

Figure 27. D²PAK tape drawing (dimensions are in mm)

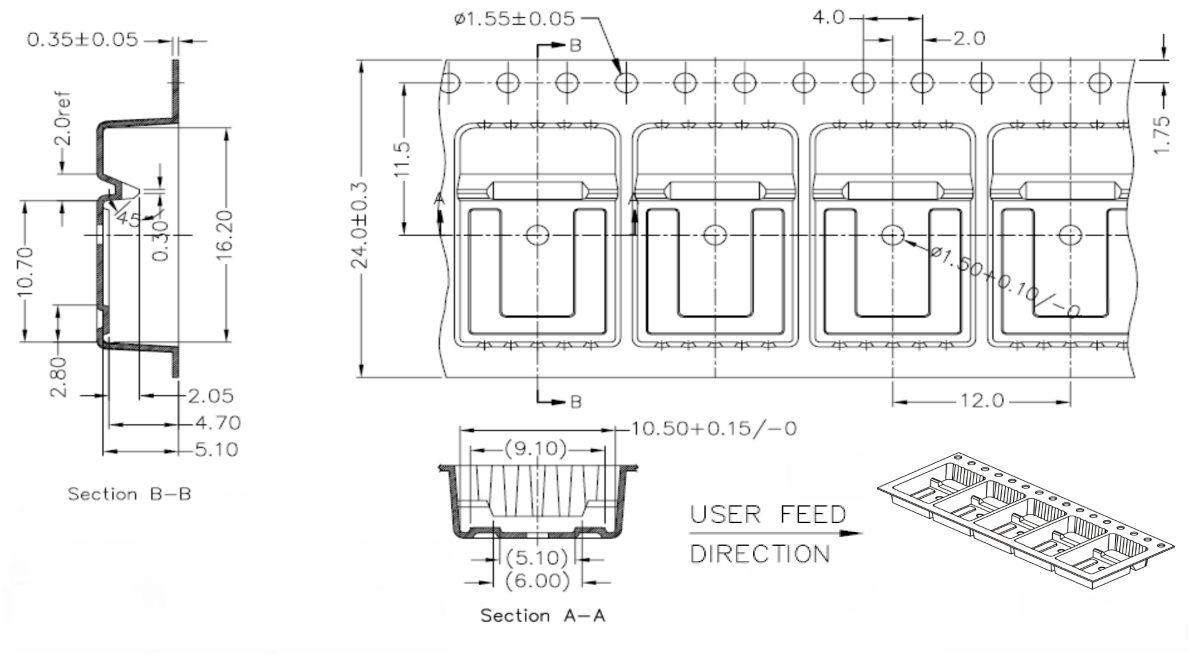

5 Ordering information

Table 11. Order codes

Order codes	Marking	Package	Packing
STB28N60DM2	28N60DM2	D²PAK	Tape and reel
STP28N60DM2		TO-220	Tube
STW28N60DM2		TO-247	

Revision history

Table 12. Document revision history

Date	Revision	Changes
21-Oct-2014	1	First release.
05-Oct-2015	2	Text and formatting changes throughout document On cover page: - upated title and Features table In section Electrical ratings: - updated all table data In section Electrical characteristics: - updated all table data - renamed table Static (was On /off states) - added table Gate-source Zener diode Added section Electrical characteristics (curves) Updated and renamed section Package mechanical data (was Package information) Datasheet promoted from preliminary to production data
30-Oct-2015	3	Minor text changes in *Section 2.1: "Electrical characteristics (curves)"*.
09-Dec-2015	4	Updated *features* and *Table 1: "Device summary"*.
24-Apr-2017	5	Updated features in cover page. Updated *Section 4: "Package information"* Minor text changes.
22-Sep-2025	6	Updated Section 4: Package information. Minor text changes.

Contents

1 Electrical ratings 2

2 Electrical characteristics 3

2.1 Electrical characteristics (curves) 5

3 Test circuits 8

4 Package information 9

4.1 D²PAK (TO-263) type A package information 9

4.2 TO-220 type A package information 12

4.3 TO-247 package information 14

4.4 D²PAK packing information 16

5 Ordering information 17

Revision history 18

IMPORTANT NOTICE – READ CAREFULLY

STMicroelectronics NV and its subsidiaries (“ST”) reserve the right to make changes, corrections, enhancements, modifications, and improvements to ST products and/or to this document at any time without notice.

In the event of any conflict between the provisions of this document and the provisions of any contractual arrangement in force between the purchasers and ST, the provisions of such contractual arrangement shall prevail.

The purchasers should obtain the latest relevant information on ST products before placing orders. ST products are sold pursuant to ST’s terms and conditions of sale in place at the time of order acknowledgment.

The purchasers are solely responsible for the choice, selection, and use of ST products and ST assumes no liability for application assistance or the design of the purchasers’ products.

No license, express or implied, to any intellectual property right is granted by ST herein.

Resale of ST products with provisions different from the information set forth herein shall void any warranty granted by ST for such product.

If the purchasers identify an ST product that meets their functional and performance requirements but that is not designated for the purchasers' market segment, the purchasers shall contact ST for more information.

ST and the ST logo are trademarks of ST. For additional information about ST trademarks, refer to www.st.com/trademarks. All other product or service names are the property of their respective owners.

Information in this document supersedes and replaces information previously supplied in any prior versions of this document.

© 2025 STMicroelectronics – All rights reserved