# STB26NM60N, STP26NM60N

Datasheet

## N-channel 600 V, 135 mΩ typ., 20 A MDmesh II Power MOSFETs in D²PAK and TO-220 packages

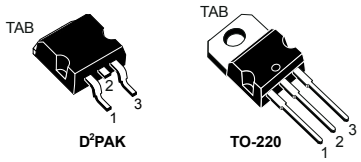


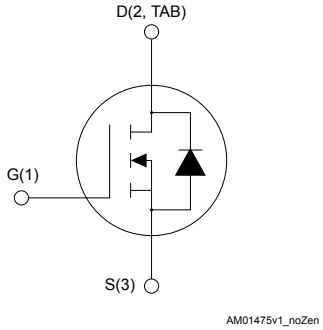


## Features

| Order code | $V_{DS}$ | $R_{DS(on)}$ max. | $I_D$ |
|---|---|---|---|
| STB26NM60N | 600 V | 165 mΩ | 20 A |
| STP26NM60N | | | |

- 100% avalanche tested
- Low input capacitance and gate charge
- Low gate input resistance

## Applications

- Switching applications

## Description

These devices are N-channel Power MOSFETs developed using the second generation of MDmesh technology. These revolutionary Power MOSFETs associate a vertical structure to the company's strip layout to yield one of the world's lowest on-resistance and gate charge. They are therefore suitable for the most demanding high-efficiency converters.

| Product status links |
|---|
| STB26NM60N |
| STP26NM60N |

| Product summary | |
|---|---|
| **Order code** | **STB26NM60N** |
| **Marking** | 26NM60N |
| **Package** | D²PAK |
| **Packing** | Tape and reel |
| **Order code** | **STP26NM60N** |
| **Marking** | 26NM60N |
| **Package** | TO-220 |
| **Packing** | Tube |

# 1 Electrical ratings

**Table 1. Absolute maximum ratings**

| Symbol | Parameter | Value | Unit |
|---|---|---|---|
| $V_{DS}$ | Drain-source voltage | 600 | V |
| $V_{GS}$ | Gate-source voltage | ±30 | V |
| $I_D$ | Drain current (continuous) at $T_C$ = 25 °C | 20 | A |
| $I_D$ | Drain current (continuous) at $T_C$ = 100 °C | 12.6 | A |
| $I_{DM}$(1) | Drain current (pulsed) | 80 | A |
| $P_{TOT}$ | Total power dissipation at $T_C$ = 25 °C | 140 | W |
| dv/dt(2) | Peak diode recovery voltage slope | 15 | V/ns |
| $T_{stg}$ | Storage temperature range | -55 to 150 | °C |
| $T_J$ | Operating junction temperature range | | °C |

1. *Pulse width limited by safe operating area.*
2. *$I_{SD}$ ≤ 20 A, di/dt ≤ 400 A/µs, $V_{DS}$(peak) ≤ $V_{(BR)DSS}$, $V_{DD}$ = 480 V.*

**Table 2. Thermal data**

| Symbol | Parameter | Value | | Unit |
|---|---|---|---|---|
| | | D²PAK | TO-220 | |
| $R_{thJC}$ | Thermal resistance, junction-to-case | 0.89 | | °C/W |
| $R_{thJA}$ | Thermal resistance, junction-to-ambient | 30(1) | 62.5 | °C/W |

1. *When mounted on a standard 1 inch² area of FR-4 PCB with 2-oz copper.*

**Table 3. Avalanche characteristics**

| Symbol | Parameter | Value | Unit |
|---|---|---|---|
| $I_{AR}$ | Avalanche current, repetitive or not-repetitive (pulse width limited by $T_J$ max.) | 6 | A |
| $E_{AS}$ | Single pulse avalanche energy (starting $T_J$ = 25 °C, $I_D$ = $I_{AR}$, $V_{DD}$ = 50 V) | 610 | mJ |

# 2 Electrical characteristics

$T_C$ = 25 °C unless otherwise specified.

**Table 4. On/off states**

| Symbol | Parameter | Test condition | Min. | Typ. | Max. | Unit |
|---|---|---|---|---|---|---|
| $V_{(BR)DSS}$ | Drain-source breakdown voltage | $I_D$ = 1 mA, $V_{GS}$ = 0 V | 600 | | | V |
| $I_{DSS}$ | Zero gate voltage drain current | $V_{GS}$ = 0 V, $V_{DS}$ = 600 V | | | 1 | µA |
| | | $V_{GS}$ = 0 V, $V_{DS}$ = 600 V, $T_C$ = 125 °C(1) | | | 100 | |
| $I_{GSS}$ | Gate body leakage current | $V_{DS}$ = 0 V, $V_{GS}$ = ±30 V | | | ±100 | nA |
| $V_{GS(th)}$ | Gate threshold voltage | $V_{DS}$ = $V_{GS}$, $I_D$ = 250 µA | 2 | 3 | 4 | V |
| $R_{DS(on)}$ | Static drain-source on resistance | $V_{GS}$ = 10 V, $I_D$ = 10 A | | 135 | 165 | mΩ |

1. *Specified by design, not tested in production.*

**Table 5. Dynamic**

| Symbol | Parameter | Test condition | Min. | Typ. | Max. | Unit |
|---|---|---|---|---|---|---|
| $C_{iss}$ | Input capacitance | $V_{DS}$ = 50 V, f = 1 MHz, $V_{GS}$ = 0 V | - | 1800 | - | pF |
| $C_{oss}$ | Output capacitance | | - | 115 | - | pF |
| $C_{rss}$ | Reverse transfer capacitance | | - | 6 | - | pF |
| $C_{oss\ eq.}$(1) | Equivalent output capacitance | $V_{DS}$ = 0 to 480 V, $V_{GS}$ = 0 V | - | 310 | - | pF |
| $R_g$ | Gate input resistance | f = 1 MHz, open drain | - | 2.8 | - | Ω |
| $Q_g$ | Total gate charge | $V_{DD}$ = 480 V, $I_D$ = 20 A, $V_{GS}$ = 0 to 10 V (see the Figure 13. Test circuit for gate charge behavior) | - | 60 | - | nC |
| $Q_{gs}$ | Gate-source charge | | - | 8.5 | - | nC |
| $Q_{gd}$ | Gate-drain charge | | - | 30 | - | nC |

1. *$C_{oss\ eq.}$ is defined as a constant equivalent capacitance giving the same charging time as $C_{oss}$ when $V_{DS}$ increases from 0 to 80% $V_{DSS}$.*

**Table 6. Switching times**

| Symbol | Parameter | Test condition | Min. | Typ. | Max. | Unit |
|---|---|---|---|---|---|---|
| $t_{d(on)}$ | Turn-on delay time | $V_{DD}$ = 300 V, $I_D$ = 10 A, $R_G$ = 4.7 Ω, $V_{GS}$ = 10 V (see the Figure 12. Test circuit for resistive load switching times and Figure 17. Switching time waveform) | - | 13 | - | ns |
| $t_r$ | Rise time | | - | 25 | - | ns |
| $t_{d(off)}$ | Turn-off delay time | | - | 85 | - | ns |
| $t_f$ | Fall time | | - | 50 | - | ns |

**Table 7. Source-drain diode**

| Symbol | Parameter | Test condition | Min. | Typ. | Max. | Unit |
|---|---|---|---|---|---|---|
| $I_{SD}$ | Source-drain current | | - | | 20 | A |
| $I_{SDM}$[1] | Source-drain current (pulsed) | | - | | 80 | A |
| $V_{SD}$[2] | Forward on voltage | $I_{SD}$ = 20 A, $V_{GS}$ = 0 V | - | | 1.5 | V |
| $t_{rr}$ | Reverse recovery time | $I_{SD}$ = 20 A, di/dt = 100 V, $V_{DD}$ = 60 V (see the Figure 14. Test circuit for inductive load switching and diode recovery times) | - | 370 | | ns |
| $Q_{rr}$ | Reverse recovery charge | | - | 5.8 | | µC |
| $I_{RRM}$ | Reverse recovery current | | - | 31.6 | | A |
| $t_{rr}$ | Reverse recovery time | $I_{SD}$ = 20 A, di/dt = 100 A/µs, $V_{DD}$ = 60 V $T_J$ = 150 °C (see the Figure 14. Test circuit for inductive load switching and diode recovery times) | - | 450 | | ns |
| $Q_{rr}$ | Reverse recovery charge | | - | 7.5 | | µC |
| $I_{RRM}$ | Reverse recovery current | | - | 32.5 | | A |

1. *Pulse width limited by safe operating area.*
2. *Pulsed: pulse duration = 300 µs, duty cycle 1.5%.*

## 2.1 Electrical characteristics (curves)

**Figure 1. Safe operating area**

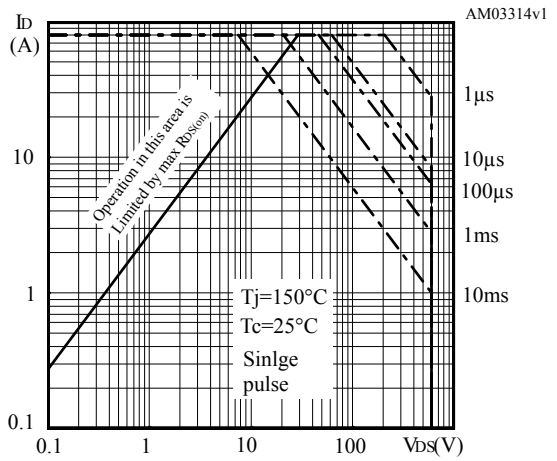


**Figure 2. Normalized transient thermal impedance**

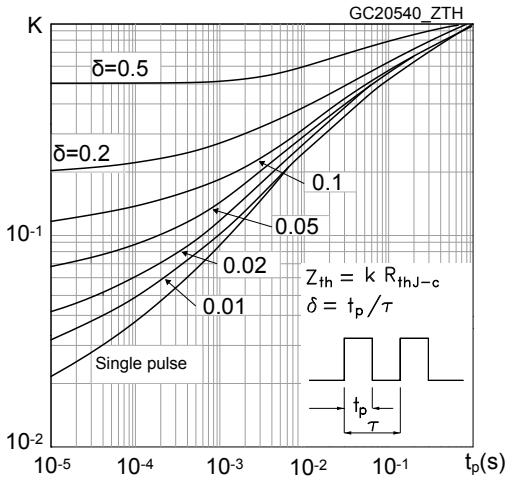


**Figure 3. Typical output characteristics**

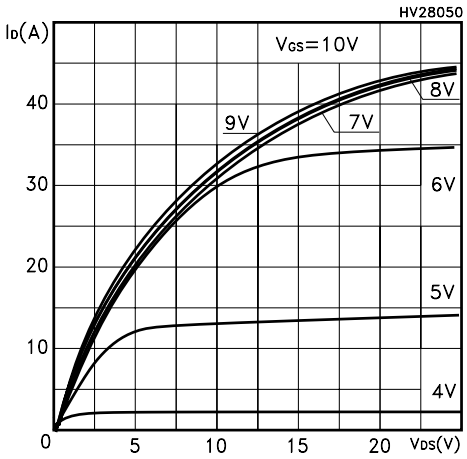


**Figure 4. Typical transfer characteristics**

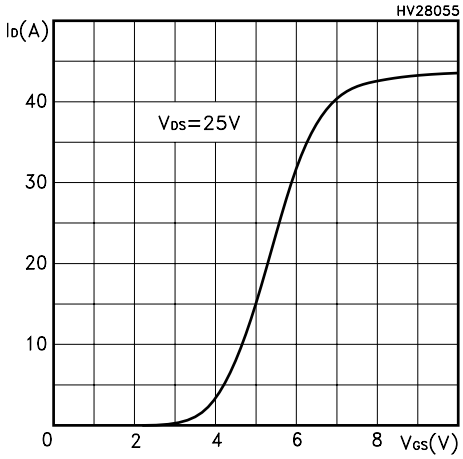


**Figure 5. Typical gate charge vs gate-source voltage**

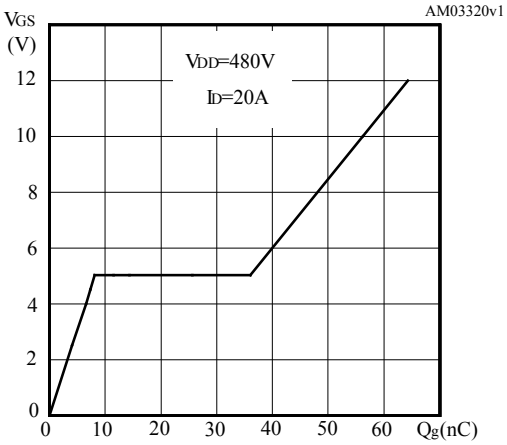


**Figure 6. Typical drain-source on-resistance**

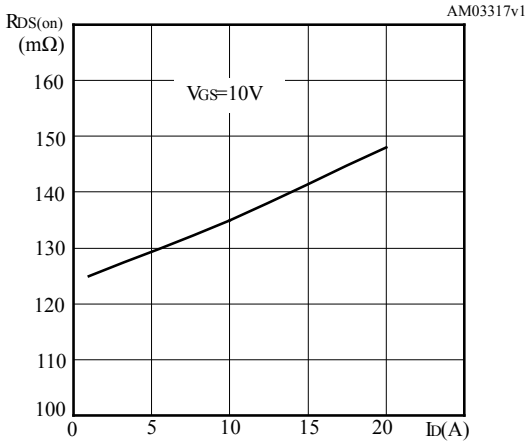

**Figure 7. Typical capacitance characteristics**

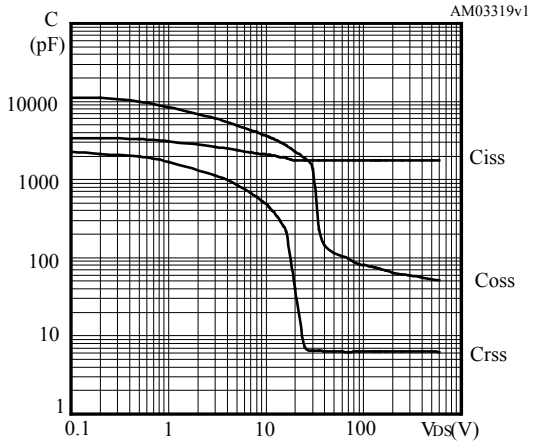


**Figure 8. Normalized gate threshold vs temperature**

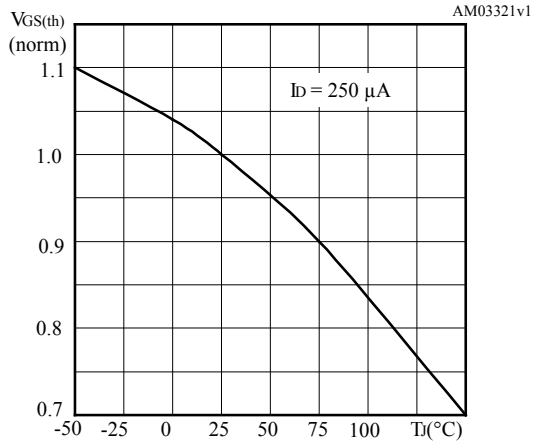


**Figure 9. Normalized on-resistance vs temperature**

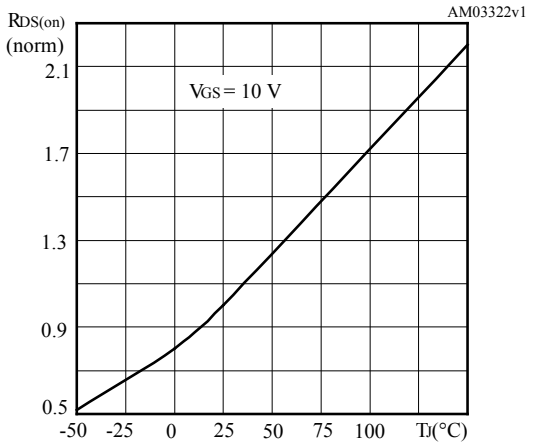


**Figure 10. Normalized breakdown voltage vs temperature**

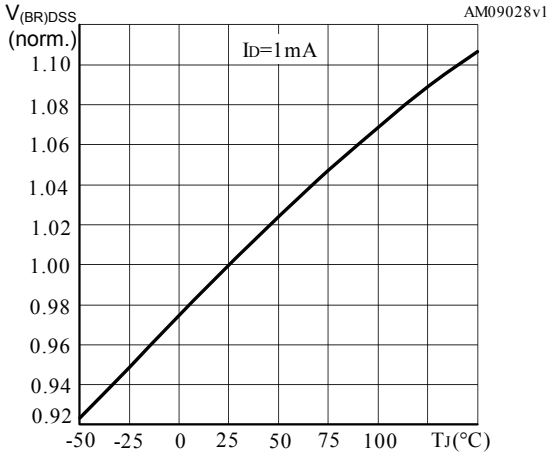


**Figure 11. Typical reverse diode forward characteristics**

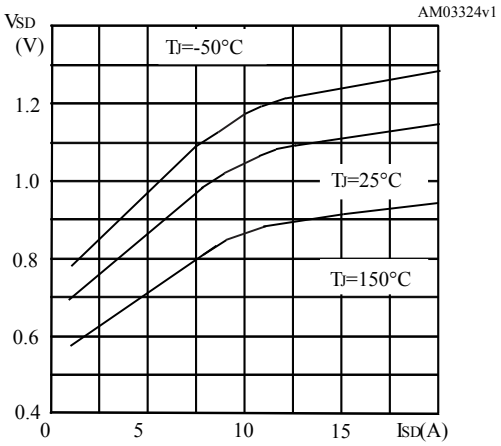

# 3 Test circuits

**Figure 12. Test circuit for resistive load switching times**

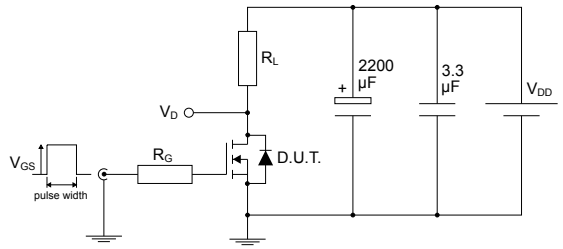


AM01468v1

**Figure 13. Test circuit for gate charge behavior**

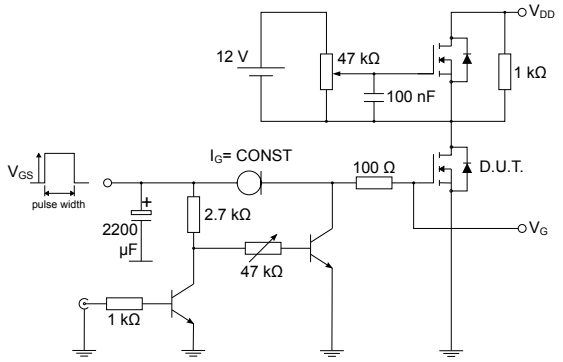


AM01469v1

**Figure 14. Test circuit for inductive load switching and diode recovery times**

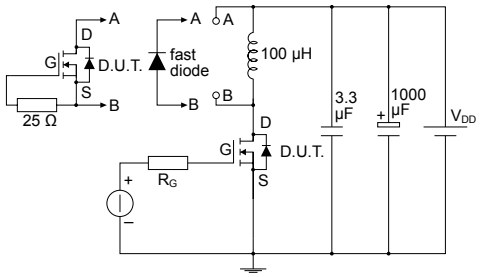


AM01470v1

**Figure 15. Unclamped inductive load test circuit**

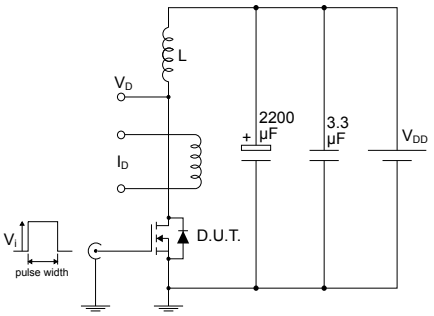


AM01471v1

**Figure 16. Unclamped inductive waveform**

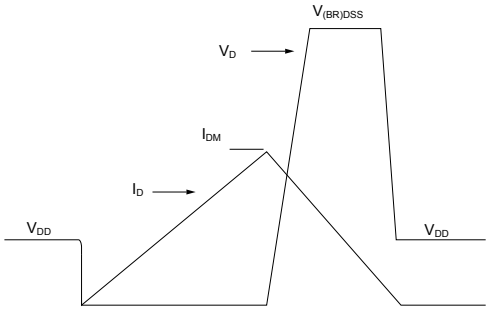


AM01472v1

**Figure 17. Switching time waveform**

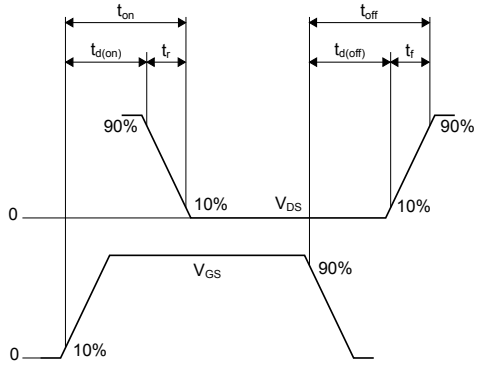


AM01473v1

# 4 Package information

To meet environmental requirements, ST offers these devices in different grades of ECOPACK packages, depending on their level of environmental compliance. ECOPACK specifications, grade definitions, and product status are available at: www.st.com. ECOPACK is an ST trademark.

## 4.1 D²PAK (TO-263) type A package information

**Figure 18. D²PAK (TO-263) type A package outline**

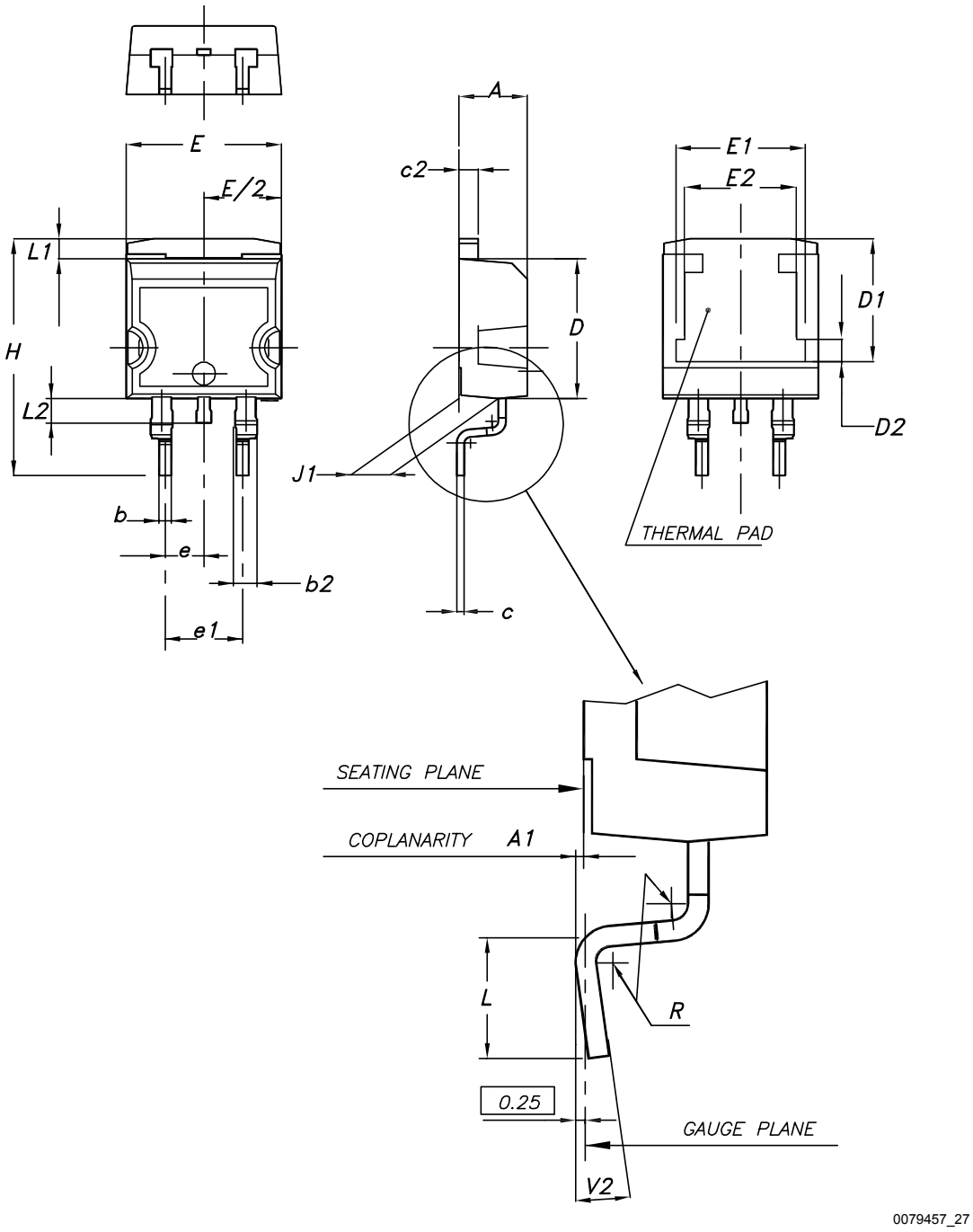

Table 8. D²PAK (TO-263) type A package mechanical data

| Dim. | mm | | |
|---|---|---|---|
| | Min. | Typ. | Max. |
| A | 4.40 | | 4.60 |
| A1 | 0.03 | | 0.23 |
| b | 0.70 | | 0.93 |
| b2 | 1.14 | | 1.70 |
| c | 0.45 | | 0.60 |
| c2 | 1.23 | | 1.36 |
| D | 8.95 | | 9.35 |
| D1 | 7.50 | 7.75 | 8.00 |
| D2 | 1.10 | 1.30 | 1.50 |
| E | 10.00 | | 10.40 |
| E1 | 8.30 | 8.50 | 8.70 |
| E2 | 6.85 | 7.05 | 7.25 |
| e | | 2.54 | |
| e1 | 4.88 | | 5.28 |
| H | 15.00 | | 15.85 |
| J1 | 2.49 | | 2.69 |
| L | 2.29 | | 2.79 |
| L1 | 1.27 | | 1.40 |
| L2 | 1.30 | | 1.75 |
| R | | 0.40 | |
| V2 | 0° | | 8° |

Figure 19. D²PAK (TO-263) recommended footprint (dimensions are in mm)

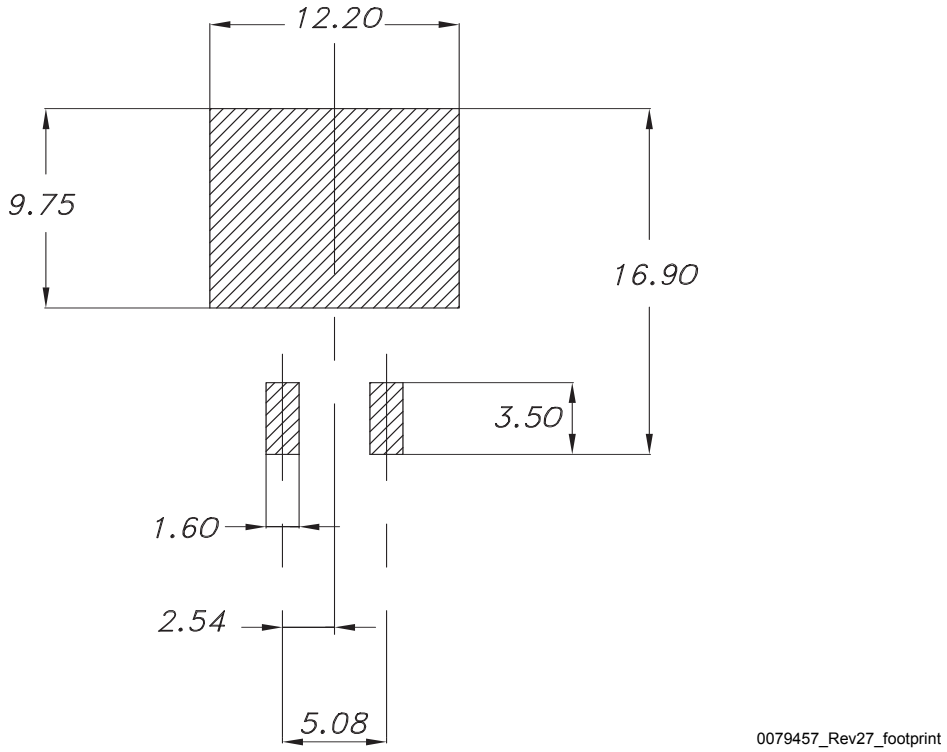

## 4.2 TO-220 type A package information

Figure 20. TO-220 type A package outline

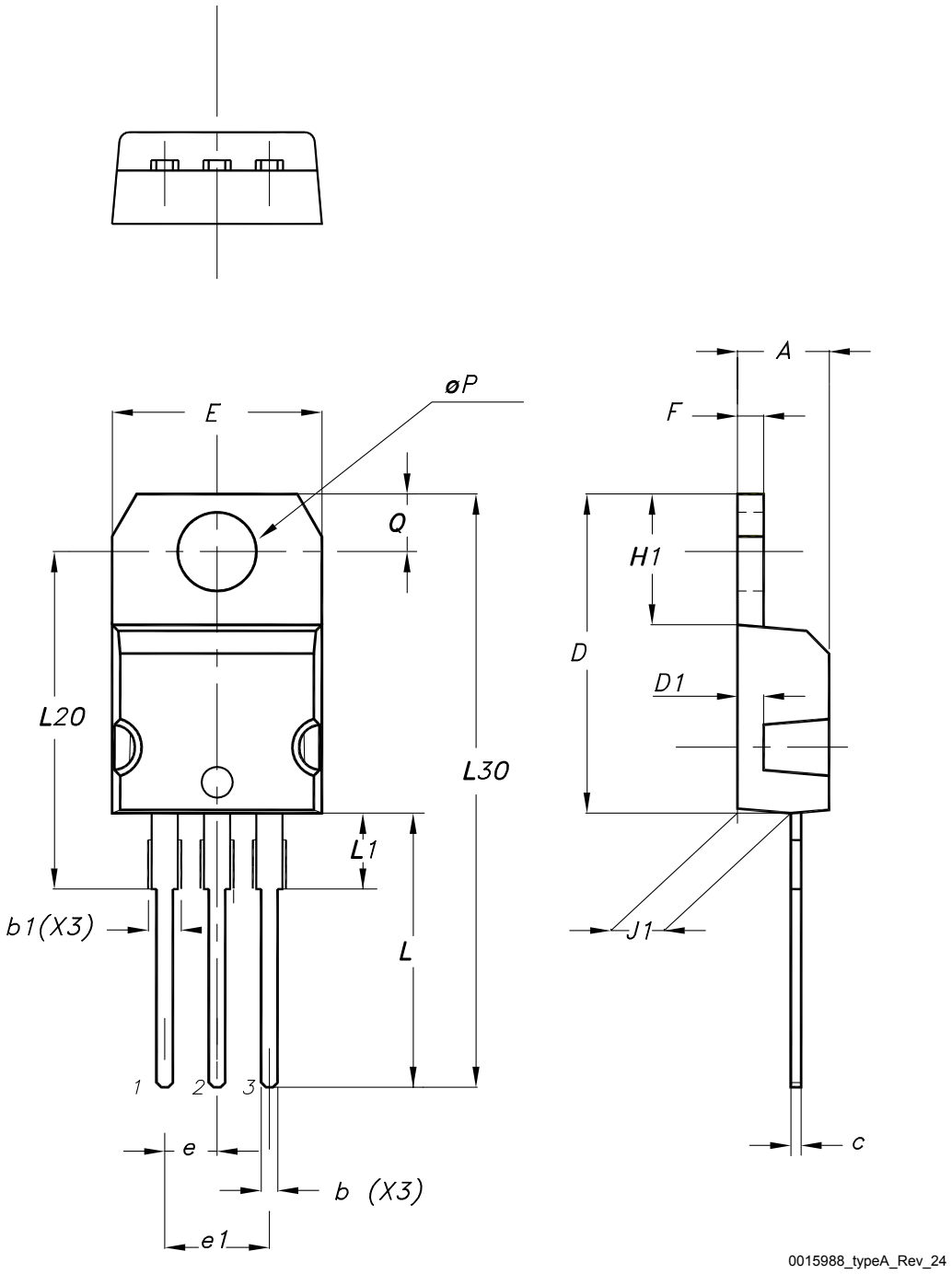

Table 9. **TO-220 type A package mechanical data**

| Dim. | mm | | |
|---|---|---|---|
| | Min. | Typ. | Max. |
| A | 4.40 | | 4.60 |
| b | 0.61 | | 0.88 |
| b1 | 1.14 | | 1.55 |
| c | 0.48 | | 0.70 |
| D | 15.25 | | 15.75 |
| D1 | | 1.27 | |
| E | 10.00 | | 10.40 |
| e | 2.40 | | 2.70 |
| e1 | 4.95 | | 5.15 |
| F | 1.23 | | 1.32 |
| H1 | 6.20 | | 6.60 |
| J1 | 2.40 | | 2.72 |
| L | 13.00 | | 14.00 |
| L1 | 3.50 | | 3.93 |
| L20 | | 16.40 | |
| L30 | | 28.90 | |
| øP | 3.75 | | 3.85 |
| Q | 2.65 | | 2.95 |
| Slug flatness | | 0.03 | 0.10 |

## 4.3 D²PAK packing information

Figure 21. D²PAK tape drawing (dimensions are in mm)

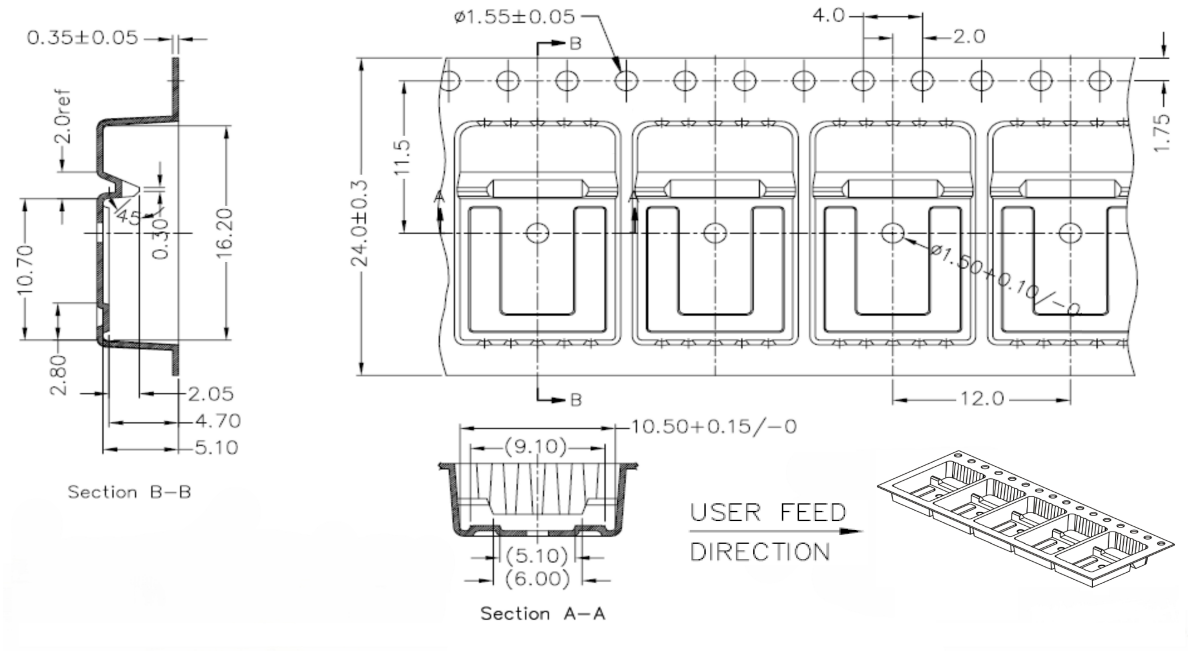


DM01095771_2

## Revision history

**Table 10. Document revision history**

| Date | Version | Changes |
|---|---|---|
| 29-Apr-2009 | 1 | First release. |
| 17-Dec-2009 | 2 | Added new package, mechanical data: D²PAK |
| 20-Jun-2011 | 3 | Inserted device in I²PAK. |
| 13-Mar-2012 | 4 | Updated $P_{TOT}$ and derating factor in *Table 2*.<br>Update $R_{thj\text{-}case}$ for TO-220FP in *Table 3*.<br>Update *Figure 10* and *Figure 15*.<br>Update *Section 5: Packaging mechanical data*. |
| 20-Jun-2012 | 5 | Updated title on the cover page.<br>Minor text changes. |
| 09-Sep-2013 | 6 | – The part numbers STI26NM60N and STW26NM60N have been moved to the separate datasheets<br>– Modified: $V_{GS}$ value in *Table 2*. |
| 12-Dec-2016 | 7 | The part number STF26NM60N has been moved to a separate datasheet.<br>Modified *Table 2: "Absolute maximum ratings"*, *Table 3: "Thermal data"*, *Table 5: "On/off states"*, *Table 6: "Dynamic"* and *Table 7: "Switching times"*.<br>Modified *Section 2.1: "Electrical characteristics (curves)"*.<br>Minor text changes. |
| 12-Sep-2025 | 8 | Updated Section 4: Package information.<br>Minor text changes. |

# Contents

**1 Electrical ratings . . . . . 2**

**2 Electrical characteristics . . . . . 3**

2.1 Electrical characteristics (curves) . . . . . 5

**3 Test circuits . . . . . 7**

**4 Package information . . . . . 8**

4.1 D²PAK (TO-263) type A package information . . . . . 8

4.2 TO-220 type A package information . . . . . 11

4.3 D²PAK packing information . . . . . 13

**Revision history . . . . . 14**

**IMPORTANT NOTICE – READ CAREFULLY**

STMicroelectronics NV and its subsidiaries (“ST”) reserve the right to make changes, corrections, enhancements, modifications, and improvements to ST products and/or to this document at any time without notice.

In the event of any conflict between the provisions of this document and the provisions of any contractual arrangement in force between the purchasers and ST, the provisions of such contractual arrangement shall prevail.

The purchasers should obtain the latest relevant information on ST products before placing orders. ST products are sold pursuant to ST’s terms and conditions of sale in place at the time of order acknowledgment.

The purchasers are solely responsible for the choice, selection, and use of ST products and ST assumes no liability for application assistance or the design of the purchasers’ products.

No license, express or implied, to any intellectual property right is granted by ST herein.

Resale of ST products with provisions different from the information set forth herein shall void any warranty granted by ST for such product.

If the purchasers identify an ST product that meets their functional and performance requirements but that is not designated for the purchasers' market segment, the purchasers shall contact ST for more information.

ST and the ST logo are trademarks of ST. For additional information about ST trademarks, refer to www.st.com/trademarks. All other product or service names are the property of their respective owners.

Information in this document supersedes and replaces information previously supplied in any prior versions of this document.

© 2025 STMicroelectronics – All rights reserved