STM32U5Gxxx

2.5D and vector graphics, JPEG codec, LTDC, MIPI®DSI, 160 MHz ULP Cortex®-M33 MCU, 4 MB flash, 3 MB SRAM, crypto

Datasheet - production data

Features

Includes ST state-of-the-art patented technology

Ultra-low-power with FlexPowerControl

- 1.71 V to 3.6 V power supply
- - 40 °C to + 85°C temperature range
- LPBAM: autonomous peripherals with DMA, functional down to Stop 2 mode
- V_{BAT} mode: supply for RTC, 32 x 32-bit backup registers and 2-Kbyte backup SRAM
- 150 nA Shutdown mode (24 wake-up pins)
- 195 nA Standby mode (24 wake-up pins)
- 480 nA Standby mode with RTC
- 2.05 µA Stop 3 mode with 40-Kbyte SRAM
- 8.25 µA Stop 3 mode with 3-Mbyte SRAM
- 4.05 µA Stop 2 mode with 40-Kbyte SRAM
- 15.5 µA Stop 2 mode with 3-Mbyte SRAM
- 18.6 µA/MHz Run mode at 3.3 V

Core

- Arm® 32-bit Cortex®-M33 CPU with TrustZone®, MPU, DSP, and FPU

ART Accelerator

- 32-Kbyte ICACHE allowing 0-wait-state execution from flash and external memories: frequency up to 160 MHz, 240 DMIPS
- 16-Kbyte data cache for external memories

Power management

- Embedded regulator (LDO) and SMPS step-down converter supporting switch on-the-fly and voltage scaling

Performance benchmark

- 1.5 DMIPS/MHz (Dhrystone 2.1)
- 655 CoreMark® (4.09 CoreMark®/MHz)

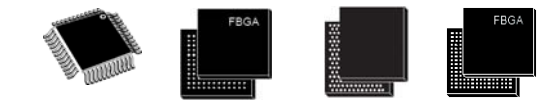

LQFP100 (14 x 14 mm) LQFP144 (20 x 20 mm)	UFBGA144 (10 x 10 mm)	WLCSP208 (5.8 x 5.6 mm)	TFBGA216 (13 x 13 mm)

Memories

- 4-Mbyte flash memory with ECC, 2 banks read-while-write, including 512 Kbytes with 100 kcycles
- With SRAM3 ECC off: 3026-Kbyte RAM including 66 Kbytes with ECC
- With SRAM3 ECC on: 2962-Kbyte RAM including 322 Kbytes with ECC
- External memory interface supporting SRAM, PSRAM, NOR, NAND and FRAM memories
- 2 Octo-SPI memory interfaces
- HSPI memory interface up to 160 MHz

Rich graphic features

- Neo-Chrom VG processor (GPU2D) accelerating any angle rotation, scaling and perspective correct texture mapping, and vector graphics
- Chrom-ART Accelerator (DMA2D) for enhanced graphic content creation
- Chrom-GRC (GFXMMU) allowing up to 20 % of graphic resources optimization
- MIPI® DSI Host controller with two DSI lanes running at up to 500 Mbit/s each
- LCD-TFT controller (LTDC)
- Digital camera interface
- Hardware JPEG codec

Product label

SUSTAINABLE TECHNOLOGY

This is information on a product in full production. www.st.com

- Dedicated graphic timer

General-purpose input/outputs

- Up to 151 fast I/Os with interrupt capability most 5V-tolerant and up to 14 I/Os with independent supply down to 1.08 V

Clock management

- 4 to 50 MHz crystal oscillator
- 32 kHz crystal oscillator for RTC (LSE)
- Internal 16 MHz factory-trimmed RC (± 1 %)
- Internal low-power 32 kHz RC (± 5 %)
- 2 internal multispeed 100 kHz to 48 MHz oscillators, including one auto-trimmed by LSE
- Internal 48 MHz
- 3 PLLs for system clock, USB, audio, ADC

Security and cryptography

- SESIP3 and PSA Level 3 Certified Assurance Target
- Arm® TrustZone® and securable I/Os, memories and peripherals
- Flexible life-cycle scheme with RDP and password-protected debug
- Root of trust thanks to unique boot entry and secure hide-protection area (HDP)
- SFI (secure firmware installation) thanks to embedded RSS (root secure services)
- Secure data storage with hardware unique key (HUK)
- Secure firmware upgrade support with TF-M
- 2 AES coprocessors including one with DPA resistance
- Public key accelerator, DPA resistant
- On-the-fly decryption of Octo-SPI external memories
- HASH hardware accelerator
- True random number generator, NIST SP800-90B compliant
- 96-bit unique ID
- 512-byte OTP (one-time programmable)
- Active tampers

Up to 17 timers, 2 watchdogs and RTC

- 19 timers: 2 16-bit advanced motor-control, 4 32-bit, 3 16-bit general purpose, 2 16-bit basic, 4 low-power 16-bit (available in Stop mode), 2 SysTick timers, and 2 watchdogs
- RTC with calendar, alarms, and calibration

Up to 25 communication peripherals

- 1 USB Type-C®/USB Power Delivery controller
- 1 USB OTG high-speed with embedded PHY
- 2 SAIs (serial-audio interface)
- 6 I2C FM+(1 Mbit/s), SMBus/PMBus®
- 7 USARTs (ISO 7816, LIN, IrDA, modem)
- 3 SPIs (5x SPIs with the dual OCTOSPI)
- 1 CAN FD controller
- 2 SDMMC interfaces
- 1 multifunction digital filter (6 filters) + 1 audio digital filter with sound-activity detection
- Parallel synchronous slave interface

16- and 4-channel DMA controllers, functional in Stop mode

Mathematical coprocessor

- CORDIC for trigonometric functions acceleration and FMAC

Up to 24 capacitive sensing channels

Rich analog peripherals (independent supply)

- 2 × 14-bit ADC 2.5-Msps with hardware oversampling
- 1 × 12-bit ADC 2.5-Msps, with hardware oversampling, autonomous in Stop 2 mode
- 12-bit DAC (2 channels), low-power sample and hold, autonomous in Stop 2 mode
- 2 operational amplifiers with built-in PGA
- 2 ultra-low-power comparators

CRC calculation unit

Debug

- Development support: serial-wire debug (SWD), JTAG, ETM

ECOPACK2 compliant packages

Table 1. Device summary

Reference	Part numbers
STM32U5Gxxx	STM32U5G7VJ, STM32U5G9BJ, STM32U5G9NJ, STM32U5G9VJ, STM32U5G9ZJ

Contents

1 Introduction 15

2 Description 16

3 Functional overview 21

3.1 Arm Cortex-M33 core with TrustZone and FPU 21

3.2 ART Accelerator (ICACHE and DCACHE) 21

3.2.1 Instruction cache (ICACHE) 21

3.2.2 Data cache (DCACHE) 22

3.3 Memory protection unit 23

3.4 Embedded flash memory 23

3.4.1 Additional flash memory protections with TrustZone activated 26

3.4.2 FLASH privilege protection 27

3.5 Embedded SRAMs 27

3.5.1 SRAMs TrustZone security 27

3.5.2 SRAMs privilege protection 27

3.6 TrustZone security architecture 28

3.6.1 TrustZone peripheral classification 29

3.6.2 Default TrustZone security state 29

3.7 Boot modes 29

3.8 Global TrustZone controller (GTZC) 32

3.9 Power supply management 32

3.9.1 Power supply schemes 33

3.9.2 Power supply supervisor 36

3.9.3 Low-power modes 37

3.9.4 Reset mode 45

3.9.5 V_{BAT} operation 45

3.9.6 PWR TrustZone security 45

3.10 Peripheral interconnect matrix 46

3.11 Reset and clock controller (RCC) 46

3.11.1 RCC TrustZone security 49

3.12 Clock recovery system (CRS) 49

3.13 General-purpose inputs/outputs (GPIOs) 49

3.13.1 GPIOs TrustZone security 49
3.14 Low-power general-purpose inputs/outputs (LPGPIO) 49
3.15 Multi-AHB bus matrix 50
3.16 System configuration controller (SYSCFG) 50
3.17 General purpose direct memory access controller (GPDMA) 50
3.18 Low-power direct memory access controller (LPDMA) 52
3.19 Neo-Chrom graphic processor (GPU2D) 54
3.20 Chrom-ART Accelerator controller (DMA2D) 55
3.21 Chrom-GRC (GFXMMU) 56
3.22 JPEG codec (JPEG) 56
3.23 Graphic timer (GFXTIM) 57
3.24 Interrupts and events 57
3.24.1 Nested vectored interrupt controller (NVIC) 57
3.24.2 Extended interrupt/event controller (EXTI) 57
3.25 Cyclic redundancy check calculation unit (CRC) 58
3.26 CORDIC coprocessor (CORDIC) 58
3.27 Filter math accelerator (FMAC) 59
3.28 Flexible static memory controller (FSMC) 59
3.28.1 LCD parallel interface 60
3.28.2 FSMC TrustZone security 60
3.29 Octo-SPI interface (OCTOSPI) 60
3.29.1 OCTOSPI TrustZone security 61
3.30 OCTOSPI I/O manager (OCTOSPIM) 61
3.31 Delay block (DLYB) 61
3.32 Hexadeca-SPI interface (HSPI) 61
3.32.1 HSPI TrustZone security 62
3.33 Analog-to-digital converters (ADC1, ADC2, and ADC4) 62
3.33.1 Analog-to-digital converters (ADC1/2) 63
3.33.2 Analog-to-digital converter 4 (ADC4) 65
3.33.3 Temperature sensor 66
3.33.4 Internal voltage reference (VREFINT) 66
3.33.5 VBAT battery voltage monitoring 67
3.34 Digital to analog converter (DAC) 67
3.35 Voltage reference buffer (VREFBUF) 68

3.36 Comparators (COMP) 68
3.37 Operational amplifiers (OPAMP) 69
3.38 Multi-function digital filter (MDF) and audio digital filter (ADF) 69
3.38.1 Multi-function digital filter (MDF) 69
3.38.2 Audio digital filter (ADF) 71
3.39 Digital camera interface (DCMI) 72
3.40 Parallel synchronous slave interface (PSSI) 73
3.41 LCD-TFT display controller (LTDC) 73
3.42 DSI Host controller (DSI) 74
3.43 Touch sensing controller (TSC) 75
3.44 True random number generator (RNG) 76
3.45 Secure advanced encryption standard hardware accelerator (SAES) and encryption standard hardware accelerator (AES) 76
3.46 HASH hardware accelerator (HASH) 78
3.47 On-the-fly decryption engine (OTFDEC) 79
3.48 Public key accelerator (PKA) 80
3.49 Timers and watchdogs 81
3.49.1 Advanced-control timers (TIM1, TIM8) 81
3.49.2 General-purpose timers (TIM2, TIM3, TIM4, TIM5, TIM15, TIM16,TIM17) 82
3.49.3 Basic timers (TIM6 and TIM7) 82
3.49.4 Low-power timers (LPTIM1, LPTIM2, LPTIM3, LPTIM4) 83
3.49.5 Infrared interface (IRTIM) 83
3.49.6 Independent watchdog (IWDG) 83
3.49.7 Window watchdog (WWDG) 84
3.49.8 SysTick timer 84
3.50 Real-time clock (RTC), tamper and backup registers 84
3.50.1 Real-time clock (RTC) 84
3.50.2 Tamper and backup registers (TAMP) 85
3.51 Inter-integrated circuit interface (I^2C) 86
3.52 Universal synchronous/asynchronous receiver transmitter (USART/UART) and low-power universal asynchronous receiver transmitter (LPUART) . 87
3.52.1 Universal synchronous/asynchronous receiver transmitter (USART/UART) 88
3.52.2 Low-power universal asynchronous receiver transmitter (LPUART) . . . 89
3.53 Serial peripheral interfaces (SPI) 90

3.54 Serial audio interfaces (SAI) 92
3.55 Secure digital input/output and MultiMediaCards interface (SDMMC) . . . 93
3.56 Controller area network (FDCAN) 94
3.57 USB on-the-go high-speed (OTG_HS) 95
3.58 USB Type-C /USB Power Delivery controller (UCPD) 96
3.59 Development support 97
3.59.1 Serial-wire/JTAG debug port (SWJ-DP) 97
3.59.2 Embedded Trace Macrocell 97

4 Pinout, pin description and alternate functions 98
4.1 Pinout/ballout schematics 98
4.2 Pin description 105
4.3 Alternate functions 131

5 Electrical characteristics 152
5.1 Parameter conditions 152
5.1.1 Minimum and maximum values 152
5.1.2 Typical values 152
5.1.3 Typical curves 152
5.1.4 Loading capacitor 152
5.1.5 Pin input voltage 152
5.1.6 Power supply scheme 152
5.1.7 Current consumption measurement 155
5.2 Absolute maximum ratings 156
5.3 Operating conditions 158
5.3.1 General operating conditions 158
5.3.2 Operating conditions at power-up/power-down 160
5.3.3 Embedded reset and power control block characteristics 160
5.3.4 SMPS characteristics 162
5.3.5 Embedded voltage reference 162
5.3.6 Supply current characteristics 164
5.3.7 Wake-up time from low-power modes and voltage scaling transition times 213
5.3.8 External clock timing characteristics 217
5.3.9 Internal clock timing characteristics 222
5.3.10 PLL characteristics 229

5.3.11 Flash memory characteristics 231
5.3.12 EMC characteristics 232
5.3.13 Electrical sensitivity characteristics 233
5.3.14 I/O current injection characteristics 234
5.3.15 I/O port characteristics 235
5.3.16 NRST pin characteristics 244
5.3.17 Extended interrupt and event controller input (EXTI) characteristics . . 245
5.3.18 Analog switches booster 245
5.3.19 14-bit analog-to-digital converter (ADC12) characteristics 245
5.3.20 12-bit analog-to-digital converter (ADC4) characteristics 252
5.3.21 Temperature sensor characteristics 257
5.3.22 V_{CORE} monitoring characteristics 257
5.3.23 V_{BAT} monitoring characteristics 257
5.3.24 Digital-to-analog converter characteristics 258
5.3.25 Voltage reference buffer characteristics 261
5.3.26 Comparator characteristics 264
5.3.27 Operational amplifiers characteristics 265
5.3.28 Temperature and backup domain supply thresholds monitoring 269
5.3.29 ADF/MDF characteristics 269
5.3.30 DCMI characteristics 272
5.3.31 PSSI characteristics 273
5.3.32 LCD-TFT controller (LTDC) characteristics 276
5.3.33 MIPI D-PHY characteristics 278
5.3.34 Timer characteristics 282
5.3.35 FSMC characteristics 283
5.3.36 OCTOSPI characteristics 299
5.3.37 HSPI characteristics 305
5.3.38 SD/SDIO/e•MMC card host interfaces (SDMMC) characteristics 310
5.3.39 Delay block characteristics 312
5.3.40 I2C interface characteristics 312
5.3.41 USART (SPI mode) characteristics 313
5.3.42 SPI characteristics 315
5.3.43 SAI characteristics 319
5.3.44 OTG_HS characteristics 321
5.3.45 UCPD characteristics 322
5.3.46 JTAG/SWD interface characteristics 322

6 Package information 325

6.1 Device marking 325

6.2 LQFP100 package information (1L) 326

6.3 UFBGA144 package information (A02Y) 329

6.4 WLCSP208 package information (B0KC) 332

6.5 TFBGA216 package information (A0L2) 336

6.6 Package thermal characteristics 338

6.6.1 Reference documents 339

7 Ordering information 340

8 Important security notice 341

9 Revision history 342

List of tables

Table 1. Device summary . . . 2
Table 2. STM32U5Gxxx features and peripheral counts . . . 17
Table 3. Access status versus protection level and execution modes when TZEN = 0 . . . 24
Table 4. Access status versus protection level and execution modes when TZEN = 1 . . . 25
Table 5. Example of memory map security attribution versus SAU configuration regions . . . 28
Table 6. Boot modes when TrustZone is disabled (TZEN = 0) . . . 30
Table 7. Boot modes when TrustZone is enabled (TZEN = 1) . . . 31
Table 8. Boot space versus RDP protection . . . 31
Table 9. STM32U5Gxxx modes overview . . . 37
Table 10. Functionalities depending on the working mode . . . 42
Table 11. GPDMA1 channels implementation and usage . . . 52
Table 12. GPDMA1 autonomous mode and wake-up in low-power modes . . . 52
Table 13. LPDMA1 channels implementation and usage . . . 53
Table 14. LPDMA1 autonomous mode and wake-up in low-power modes . . . 54
Table 15. ADC features . . . 62
Table 16. Temperature sensor calibration values . . . 66
Table 17. Internal voltage reference calibration values . . . 67
Table 18. MDF features . . . 69
Table 19. AES/SAES features . . . 78
Table 20. Timer feature comparison . . . 81
Table 21. I2C implementation . . . 87
Table 22. USART, UART, and LPUART features . . . 87
Table 23. SPI features . . . 91
Table 24. SAI implementation . . . 93
Table 25. SDMMC features . . . 94
Table 26. Legend/abbreviations used in the pinout table . . . 105
Table 27. STM32U5Gxxx pin/ball definitions . . . 106
Table 28. Alternate function AF0 to AF7 . . . 131
Table 29. Alternate function AF8 to AF15 . . . 141
Table 30. Voltage characteristics . . . 156
Table 31. Current characteristics . . . 157
Table 32. Thermal characteristics . . . 157
Table 33. General operating conditions . . . 158
Table 34. Operating conditions at power-up/power-down . . . 160
Table 35. Embedded reset and power control block characteristics . . . 160
Table 36. SMPS characteristics . . . 162
Table 37. Embedded internal voltage reference . . . 162
Table 38. Current consumption in Run mode on LDO, code with data processing running from flash memory, ICACHE ON in 1-way, prefetch ON . . . 165
Table 39. Current consumption in Run mode on SMPS, code with data processing running from flash memory, ICACHE ON in 1-way, prefetch ON . . . 166
Table 40. Current consumption in Run mode on SMPS, code with data processing running from flash memory, ICACHE ON in 1-way, prefetch ON, VDD = 3.0 V . . . 167
Table 41. Static power consumption of flash memory banks when supplied by LDO or SMPS . . . 168
Table 42. Typical current consumption in Run mode on LDO, with different codes running from flash memory, ICACHE ON (1-way), prefetch ON . . . 168
Table 43. Typical current consumption in Run mode on SMPS, with different codes running from flash memory, ICACHE ON (1-way), prefetch ON . . . 170

Table 44. Typical current consumption in Run mode on LDO, with different codes running from flash memory in low-power mode, ICACHE ON (1-way), prefetch ON. 171
Table 45. Typical current consumption in Run mode on SMPS, with different codes running from flash memory in low-power mode, ICACHE ON (1-way), prefetch ON. 171
Table 46. Current consumption in Sleep mode on LDO, flash memory in power down 172
Table 47. Current consumption in Sleep mode on SMPS, flash memory in power down. 173
Table 48. Current consumption in Sleep mode on SMPS, flash memory in power down, VDD = 3.0 V 174
Table 49. SRAM1/SRAM3/SRAM5/SRAM6 current consumption in Run/Sleep mode with LDO and SMPS 175
Table 50. Current consumption in Stop 0 mode on LDO 178
Table 51. Current consumption in Stop 0 mode on SMPS 179
Table 52. Current consumption in Stop 1 mode on LDO 180
Table 53. Current consumption during wake-up from Stop 1 mode on LDO 181
Table 54. Current consumption in Stop 1 mode on SMPS 182
Table 55. Current consumption during wake-up from Stop 1 mode on SMPS 183
Table 56. Current consumption in Stop 2 mode on LDO 184
Table 57. SRAM static power consumption in Stop 2 when supplied by LDO 185
Table 58. Current consumption during wake-up from Stop 2 mode on LDO 187
Table 59. Current consumption in Stop 2 mode on SMPS 188
Table 60. SRAM static power consumption in Stop 2 when supplied by SMPS. 189
Table 61. Current consumption during wake-up from Stop 2 mode on SMPS 191
Table 62. Current consumption in Stop 3 mode on LDO 192
Table 63. SRAM static power consumption in Stop 3 when supplied by LDO 194
Table 64. Current consumption during wake-up from Stop 3 mode on LDO 195
Table 65. Current consumption in Stop 3 mode on SMPS 196
Table 66. SRAM static power consumption in Stop 3 when supplied by SMPS. 197
Table 67. Current consumption during wake-up from Stop 3 mode on SMPS 199
Table 68. Current consumption in Standby mode 200
Table 69. Current consumption during wake-up from Standby mode. 204
Table 70. Current consumption in Shutdown mode 204
Table 71. Current consumption during wake-up from Shutdown mode 205
Table 72. Current consumption in V_{BAT} mode 205
Table 73. Typical dynamic current consumption of peripherals 208
Table 74. Low-power mode wake-up timings on LDO 214
Table 75. Low-power mode wake-up timings on SMPS 215
Table 76. Regulator mode transition times 217
Table 77. Wake-up time using USART/LPUART 217
Table 78. High-speed external user clock characteristics. 218
Table 79. Low-speed external user clock characteristics 219
Table 80. HSE oscillator characteristics 220
Table 81. LSE oscillator characteristics (f_{LSE} = 32.768 kHz) 222
Table 82. HSI16 oscillator characteristics. 223
Table 83. MSI oscillator characteristics 224
Table 84. HSI48 oscillator characteristics. 227
Table 85. SHSI oscillator characteristics 229
Table 86. LSI oscillator characteristics 229
Table 87. PLL characteristics 229
Table 88. Flash memory characteristics 231
Table 89. Flash memory endurance and data retention 231
Table 90. EMS characteristics 232
Table 91. EMI characteristics (for f_{HSE} = 8 MHz, f_{HCLK} = 160 MHz) 233

Table 92. ESD absolute maximum ratings . . . 233
Table 93. Electrical sensitivities . . . 234
Table 94. I/O current injection susceptibility . . . 235
Table 95. I/O static characteristics . . . 235
Table 96. Output voltage characteristics (all I/Os except FT_t I/Os in VBAT mode and FT_o I/Os) . . . 238
Table 97. Output voltage characteristics for FT_t I/Os in V_{BAT} mode, and for FT_o I/Os . . . 238
Table 98. Output AC characteristics, HSLV OFF (all I/Os except FT_c, FT_t in VBAT mode and FT_o I/Os) . . . 239
Table 99. Output AC characteristics, HSLV ON (all I/Os except FT_c) . . . 241
Table 100. Output AC characteristics for FT_c I/Os . . . 243
Table 101. Output AC characteristics for FT_t I/Os in V_{BAT} mode . . . 243
Table 102. NRST pin characteristics . . . 244
Table 103. EXTI input characteristics . . . 245
Table 104. Analog switches booster characteristics . . . 245
Table 105. 14-bit ADC12 characteristics . . . 245
Table 106. Maximum RAIN for 14-bit ADC12 . . . 248
Table 107. 14-bit ADC12 accuracy . . . 250
Table 108. 12-bit ADC4 characteristics . . . 252
Table 109. Maximum RAIN for 12-bit ADC4 . . . 254
Table 110. 12-bit ADC4 accuracy . . . 256
Table 111. Temperature sensor characteristics . . . 257
Table 112. V_{CORE} monitoring characteristics . . . 257
Table 113. V_{BAT} monitoring characteristics . . . 257
Table 114. V_{BAT} charging characteristics . . . 258
Table 115. DAC characteristics . . . 258
Table 116. DAC accuracy . . . 260
Table 117. VREFBUF characteristics . . . 261
Table 118. COMP characteristics . . . 264
Table 119. OPAMP characteristics . . . 265
Table 120. ADF characteristics . . . 270
Table 121. MDF characteristics . . . 271
Table 122. DCMI characteristics . . . 272
Table 123. PSSI transmit characteristics . . . 273
Table 124. PSSI receive characteristics . . . 274
Table 125. LTDC characteristics . . . 276
Table 126. MIPI D-PHY characteristics . . . 278
Table 127. MIPI D-PHY AC characteristics LP mode and HS/LP transitions . . . 279
Table 128. DSI-PLL characteristics . . . 280
Table 129. DSI current consumption characteristics on V_{DDDSI} . . . 281
Table 130. DSI current consumption characteristics on $V_{DD11DSI}$ . . . 281
Table 131. TIMx characteristics . . . 282
Table 132. IWDG min/max timeout period at 32 kHz (LSI) . . . 283
Table 133. WWDG min/max timeout value at 160 MHz (PCLK) . . . 283
Table 134. Asynchronous non-multiplexed SRAM/PSRAM/NOR read timings . . . 285
Table 135. Asynchronous non-multiplexed SRAM/PSRAM/NOR read-NWAIT timings . . . 285
Table 136. Asynchronous non-multiplexed SRAM/PSRAM/NOR write timings . . . 286
Table 137. Asynchronous non-multiplexed SRAM/PSRAM/NOR write-NWAIT timings . . . 287
Table 138. Asynchronous multiplexed PSRAM/NOR read timings . . . 288
Table 139. Asynchronous multiplexed PSRAM/NOR read-NWAIT timings . . . 288
Table 140. Asynchronous multiplexed PSRAM/NOR write timings . . . 289
Table 141. Asynchronous multiplexed PSRAM/NOR write-NWAIT timings . . . 290

Table 142. Synchronous multiplexed NOR/PSRAM read timings . . . 291
Table 143. Synchronous multiplexed PSRAM write timings . . . 293
Table 144. Synchronous non-multiplexed NOR/PSRAM read timings . . . 294
Table 145. Synchronous non-multiplexed PSRAM write timings . . . 296
Table 146. Switching characteristics for NAND Flash read cycles . . . 298
Table 147. Switching characteristics for NAND Flash write cycles . . . 299
Table 148. OCTOSPI characteristics in SDR mode . . . 299
Table 149. OCTOSPI characteristics in DTR mode (no DQS) . . . 300
Table 150. OCTOSPI characteristics in DTR mode (with DQS)/HyperBus . . . 301
Table 151. HSPI characteristics in SDR mode . . . 305
Table 152. HSPI characteristics in DTR mode (no DQS) . . . 306
Table 153. HSPI characteristics in DTR mode (with DQS)/HyperBus . . . 306
Table 154. SD/e•MMC characteristics (V_{DD} = 2.7 V to 3.6 V) . . . 310
Table 155. e•MMC characteristics (V_{DD} = 1.71 V to 1.9 V) . . . 311
Table 156. Delay block characteristics . . . 312
Table 157. I2C analog filter characteristics . . . 313
Table 158. USART (SPI mode) characteristics . . . 313
Table 159. SPI characteristics . . . 316
Table 160. SAI characteristics . . . 319
Table 161. OTG_HS electrical characteristics . . . 321
Table 162. OTG_HS DC electrical characteristics . . . 321
Table 163. OTG_HS PHY BCD electrical characteristics . . . 322
Table 164. UCPD characteristics . . . 322
Table 165. JTAG characteristics . . . 323
Table 166. SWD characteristics . . . 323
Table 167. LQFP100 - Mechanical data . . . 327
Table 168. UFBGA144 - Mechanical data . . . 330
Table 169. UFBGA144 - Example of PCB design rules (0.80 mm pitch BGA) . . . 331
Table 170. WLCSP208 - Mechanical data . . . 333
Table 171. WLCSP208 - Recommended PCB design rules . . . 334
Table 172. TFBGA216 - Mechanical data . . . 337
Table 173. TFBGA216 - Example of PCB design rules (0.8 mm pitch) . . . 338
Table 174. Package thermal characteristics . . . 339
Table 175. Document revision history . . . 342

List of figures

Figure 1. STM32U5Gxxx block diagram . . . 20
Figure 2. STM32U5GxxxxxQ power supply overview . . . 35
Figure 3. Power-up /down sequence . . . 36
Figure 4. Clock tree . . . 48
Figure 5. VREFBUF block diagram . . . 68
Figure 6. LQFP100_SMPS pinout . . . 98
Figure 7. LQFP100 pinout . . . 99
Figure 8. LQFP100_DSI_SMPS pinout . . . 100
Figure 9. LQFP144_DSI_SMPS pinout . . . 101
Figure 10. UFBGA144_DSI_SMPS ballout . . . 102
Figure 11. WLCSP208_DSI_SMPS ballout . . . 103
Figure 12. TFBGA216_DSI_SMPS ballout . . . 104
Figure 13. Pin loading conditions . . . 152
Figure 14. Pin input voltage . . . 152
Figure 15. STM32U5Gxxx power supply scheme (without SMPS) . . . 153
Figure 16. STM32U5GxxxxxQ power supply scheme (with SMPS) . . . 154
Figure 17. Current consumption measurement . . . 155
Figure 18. VREFINT versus temperature . . . 163
Figure 19. AC timing diagram for high-speed external clock source (digital mode) . . . 218
Figure 20. AC timing diagram for high-speed external clock source (analog mode) . . . 219
Figure 21. AC timing diagram for low-speed external square clock source . . . 220
Figure 22. AC timing diagram for low-speed external sinusoidal clock source . . . 220
Figure 23. Typical application with an 8 MHz crystal . . . 221
Figure 24. Typical application with a 32.768 kHz crystal . . . 222
Figure 25. HSI16 frequency versus temperature and V_{DD} . . . 223
Figure 26. HSI48 frequency versus temperature . . . 228
Figure 27. I/O input characteristics (all I/Os except FT_c) . . . 237
Figure 28. Output AC characteristics definition . . . 243
Figure 29. Recommended NRST pin protection . . . 244
Figure 30. ADC accuracy characteristics . . . 251
Figure 31. Typical connection diagram when using the ADC with FT/TT pins featuring analog switch function . . . 251
Figure 32. 12-bit buffered/non-buffered DAC . . . 260
Figure 33. V_{REFBUF_OUT} versus temperature (VRS = 000) . . . 263
Figure 34. V_{REFBUF_OUT} versus temperature (VRS = 001) . . . 263
Figure 35. V_{REFBUF_OUT} versus temperature (VRS = 010) . . . 263
Figure 36. V_{REFBUF_OUT} versus temperature (VRS = 011) . . . 264
Figure 37. OPAMP voltage noise density, normal mode, R_{LOAD} = 3.9 kΩ . . . 268
Figure 38. OPAMP voltage noise density, low-power mode, R_{LOAD} = 20 kΩ . . . 269
Figure 39. ADF timing diagram . . . 270
Figure 40. MDF timing diagram . . . 272
Figure 41. DCMI timing diagram . . . 273
Figure 42. PSSI transmit timing diagram . . . 274
Figure 43. PSSI receive timing diagram . . . 275
Figure 44. LTDC horizontal timing diagram . . . 277
Figure 45. LTDC vertical timing diagram . . . 277
Figure 46. MIPI D-PHY HS/LP clock lane transition . . . 280
Figure 47. MIPI D-PHY HS/LP data lane transition . . . 280

Figure 48. Asynchronous non-multiplexed SRAM/PSRAM/NOR read waveforms 284
Figure 49. Asynchronous non-multiplexed SRAM/PSRAM/NOR write waveforms 286
Figure 50. Asynchronous multiplexed PSRAM/NOR read waveforms. 287
Figure 51. Asynchronous multiplexed PSRAM/NOR write waveforms 289
Figure 52. Synchronous multiplexed NOR/PSRAM read timings 291
Figure 53. Synchronous multiplexed PSRAM write timings. 292
Figure 54. Synchronous non-multiplexed NOR/PSRAM read timings 294
Figure 55. Synchronous non-multiplexed PSRAM write timings 295
Figure 56. NAND controller waveforms for read access 297
Figure 57. NAND controller waveforms for write access 297
Figure 58. NAND controller waveforms for common memory read access 298
Figure 59. NAND controller waveforms for common memory write access. 298
Figure 60. OCTOSPI timing diagram - SDR mode 303
Figure 61. OCTOSPI timing diagram - DDR mode 303
Figure 62. OCTOSPI HyperBus clock 303
Figure 63. OCTOSPI HyperBus read. 304
Figure 64. OCTOSPI HyperBus read with double latency 304
Figure 65. OCTOSPI HyperBus write 304
Figure 66. HSPI timing diagram - SDR mode 308
Figure 67. HSPI timing diagram - DTR mode 308
Figure 68. HSPI HyperBus clock 308
Figure 69. HSPI HyperBus read 309
Figure 70. HSPI HyperBus write 309
Figure 71. SD high-speed mode 311
Figure 72. SD default mode 311
Figure 73. SDMMC DDR mode 312
Figure 74. USART timing diagram in SPI master mode. 314
Figure 75. USART timing diagram in SPI slave mode 315
Figure 76. SPI timing diagram - slave mode and CPHA = 0 317
Figure 77. SPI timing diagram - slave mode and CPHA = 1 318
Figure 78. SPI timing diagram - master mode 318
Figure 79. SAI master timing diagram 320
Figure 80. SAI slave timing diagram 320
Figure 81. JTAG timing diagram 323
Figure 82. SWD timing diagram. 324
Figure 83. LQFP100 - Outline(15). 326
Figure 84. LQFP100 - Footprint example 328
Figure 85. UFBGA144 - Outline(13) 329
Figure 86. UFBGA144 - Footprint example 331
Figure 87. WLCSP208- Outline 332
Figure 88. WLCSP208 - Recommended footprint 334
Figure 89. WLCSP208 marking example (package top view) 334
Figure 90. TFBGA216 - Outline 336
Figure 91. TFBGA216 - Footprint example 338

1 Introduction

This document provides the ordering information and mechanical device characteristics of the STM32U5Gxxx microcontrollers.

For information on the Arm®[a] Cortex®-M33 core, refer to the Cortex®-M33 Technical reference manual, available from the www.arm.com website.

For information on the device errata with respect to the datasheet and reference manual, refer to the STM32U5Fxxx and STM32U5Gxxx errata sheet (ES0595)

a. Arm is a registered trademark of Arm Limited (or its subsidiaries) in the US and/or elsewhere.

2 Description

The STM32U5Gxxx devices belong to an ultra-low-power microcontroller family (STM32U5 Series) based on the high-performance Arm® Cortex®-M33 32-bit RISC core. They operate at a frequency of up to 160 MHz.

The Cortex®-M33 core features a single-precision FPU (floating-point unit), that supports all the Arm® single-precision data-processing instructions and all the data types.

The Cortex®-M33 core also implements a full set of DSP (digital signal processing) instructions and a MPU (memory protection unit) that enhances the application security.

The devices embed high-speed memories (up to 4 Mbytes of flash memory and 3 Mbytes of SRAM), an FSMC (flexible external memory controller) for static memories (for devices with packages of 100 pins and more), two Octo-SPI and one Hexadeca-SPI memory interfaces (at least one Quad-SPI available on all packages) and an extensive range of enhanced I/Os and peripherals connected to three APB buses, three AHB buses and a 32-bit multi-AHB bus matrix.

The devices offer security foundation compliant with the TBSA (trusted-based security architecture) requirements from Arm®. It embeds the necessary security features to implement a secure boot, secure data storage and secure firmware update. Besides these capabilities, the devices incorporate a secure firmware installation feature that allows the customer to secure the provisioning of the code during its production. A flexible life cycle is managed thanks to multiple levels of readout protection and debug unlock with password. Firmware hardware isolation is supported thanks to securable peripherals, memories and I/Os, and privilege configuration of peripherals and memories.

The devices feature several protection mechanisms for embedded flash memory and SRAM: readout protection, write protection, secure and hide protection areas.

The devices embed several peripherals reinforcing security: a fast AES coprocessor, a secure AES coprocessor with DPA resistance and hardware unique key that can be shared by hardware with fast AES, a PKA (public key accelerator) with DPA resistance, an on-the-fly decryption engine for Octo-SPI external memories, a HASH hardware accelerator, and a true random number generator.

The devices offer active tamper detection and protection against transient and environmental perturbation attacks, thanks to several internal monitoring generating secret data erase in case of attack. This helps to fit the PCI requirements for point of sales applications.

The devices offer two fast 14-bit ADCs (2.5 Msps), one 12-bit ADC (2.5 Msps), two comparators, two operational amplifiers, two DAC channels, an internal voltage reference buffer, a low-power RTC, four 32-bit general-purpose timers, two 16-bit PWM timers dedicated to motor control, three 16-bit general-purpose timers, two 16-bit basic timers and four 16-bit low-power timers.

The devices offer a rich set of graphic oriented peripherals: GPU2D (Neo-Chrom graphic processor) for graphic data fast processing including vector graphic operation, DMA2D (Chrom-ART Accelerator) for enhanced graphic content creation, GFXMMU (Chrom-GRC) allowing up to 20 % of graphic resources optimization, MIPI® DSI Host controller with two DSI lanes running at up to 500 Mbit/s each, and LTDC (LCD-TFT controller), a JPEG hardware compressor/decompressor and a dedicated GFXTIM graphic timer.

The devices support an MDF (multifunction digital filter) with six filters dedicated to the connection of external sigma-delta modulators. Another low-power digital filter dedicated to audio signals is embedded (ADF), with one filter supporting sound-activity detection. The devices embed mathematical accelerators (a trigonometric functions accelerator plus a filter mathematical accelerator). In addition, up to 24 capacitive sensing channels are available.

The devices also feature standard and advanced communication interfaces such as: six I^2Cs, three SPIs, four USARTs, two UARTs and one low-power UART, two SAIs, one DCMI (digital camera interface), two SDMMCs, one FDCAN, one USB OTG high-speed, one USB Type-C™/USB Power Delivery controller, and one generic synchronous 8-/16-bit PSSI (parallel data input/output slave interface).

The devices operate in the –40 to +85 °C (+ 105 °C junction) temperature ranges from a 1.71 to 3.6 V power supply.

A comprehensive set of power-saving modes allows the design of low-power applications. Many peripherals (including communication, analog, timers, and audio peripherals) can be functional and autonomous down to Stop mode with direct memory access, thanks to LPBAM support (low-power background autonomous mode).

Some independent power supplies are supported like an analog independent supply input for ADC, DACs, OPAMPs and comparators, a 3.3 V dedicated supply input for USB and up to 14 I/Os that can be supplied independently down to 1.08 V. A VBAT input is available for connecting a backup battery in order to preserve the RTC functionality and to backup 32 32-bit registers and 2-Kbyte SRAM.

Table 2. STM32U5Gxxx features and peripheral counts

Peripherals		STM32U5G7VJ	STM32U5G9VJ	STM32U5G9ZJ	STM32U5G9BJ	STM32U5G9NJ
Flash memory (Mbytes)		4				
SRAM	System (Kbytes)	3024 (768 + 64 + 832 + 16 + 832 + 512)				
	Backup (bytes)	2048 backup SRAM + 128 backup registers				
External memory controller for static memories (FSMC)		Yes	No	Partial	Yes	
OCTOSPI		2(1)			2	
HSPI		0	1(2)		1	
Timers	Advanced control	2 (16 bits)				
	General purpose	4 (32 bits) and 3 (16 bits)				
	Basic	2 (16 bits)				
	Low power	4 (16 bits)				
	SysTick	2				
	Watchdog timers (independent window)	2				

Table 2. STM32U5Gxxx features and peripheral counts (continued)

Peripherals		STM32U5G7VJ	STM32U5G9VJ	STM32U5G9ZJ	STM32U5G9BJ	STM32U5G9NJ
Communication interfaces	SPI	3				
	I2C	6				
	USART	4				
	UART	2				
	LPUART	1				
	SAI	2				
	FDCAN	1			0	1
	OTG HS	Yes				
	UCPD	Yes				
	SDMMC	2(3)	1(4)	2(3)		
	Camera interface	Yes				
	PSSI	Yes(2)		Yes		
Graphic accelerators	GPU2D	Yes				
	GFXMMU	Yes				
	DMA2D	Yes				
	DSI	No	Yes			
	LTDC	Yes	No(5)	Yes		
	JPEG	Yes				
	GFXTIM	Yes				
Multi-function digital filter (MDF)		Yes (6 filters)				
Audio digital filter (ADF)		Yes				
CORDIC co-processor		Yes				
Filter mathematical accelerator (FMAC)		Yes				
Real time clock (RTC)		Yes				
Tamper pins Active tampers(6)		6 4	3 0	7 4	7 6	
True random number generator		Yes				
SAES, AES		Yes				
Public key accelerator (PKA)		Yes				
HASH (SHA-256)		Yes				
On-the-fly decryption for OCTOSPI		Yes				

Table 2. STM32U5Gxxx features and peripheral counts (continued)

Peripherals		STM32U5G7VJ	STM32U5G9VJ	STM32U5G9ZJ	STM32U5G9BJ	STM32U5G9NJ
GPIOs (without SMPS / with SMPS) Wake-up pins (without SMPS / with SMPS) Number of I/Os down to 1.08 V (without SMPS / with SMPS)		82/79 23/22 0/0	NA/63 NA/18 NA/0	NA/101 NA/23 NA/6	NA/145 NA/24 NA/14	NA/156 NA/24 NA/14
Capacitive sensing Number of channels (without SMPS / with SMPS)		19/18	NA/4	NA/21	NA/24	
ADC	12-bit ADC	1				
	14-bit ADC	2				
	Nb of channels (without SMPS / with SMPS)	20/18	NA/17	NA/22	NA/24	
DAC	12-bit DAC controller	1				
	Number of 12-bit D-to-A converters	2				
Internal voltage reference buffer		No	Yes			
Analog comparator		2				
Operational amplifiers		2				
Maximum CPU frequency		160 MHz				
Operating voltage		1.71 to 3.6 V				
Operating temperature	Ambient operating temperature	– 40 to +85 °C				
	Junction temperature	– 40 to 105 °C				
Package		LQFP100		LQFP144 UFBGA144	WLCSP208	TFBGA216

1. Two OCTOSPIs are available only in Muxed mode.
2. 8 bits only.
3. When both are used simultaneously, one supports only SDIO interface.
4. Supporting 4 channels only.
5. Even if not all LTDC signals can be mapped on GPIO AFs, the LTDC can be internally used to provide data to the DSI.
6. Active tampers in output sharing mode (one output shared by all inputs).

Figure 1. STM32U5Gxxx block diagram

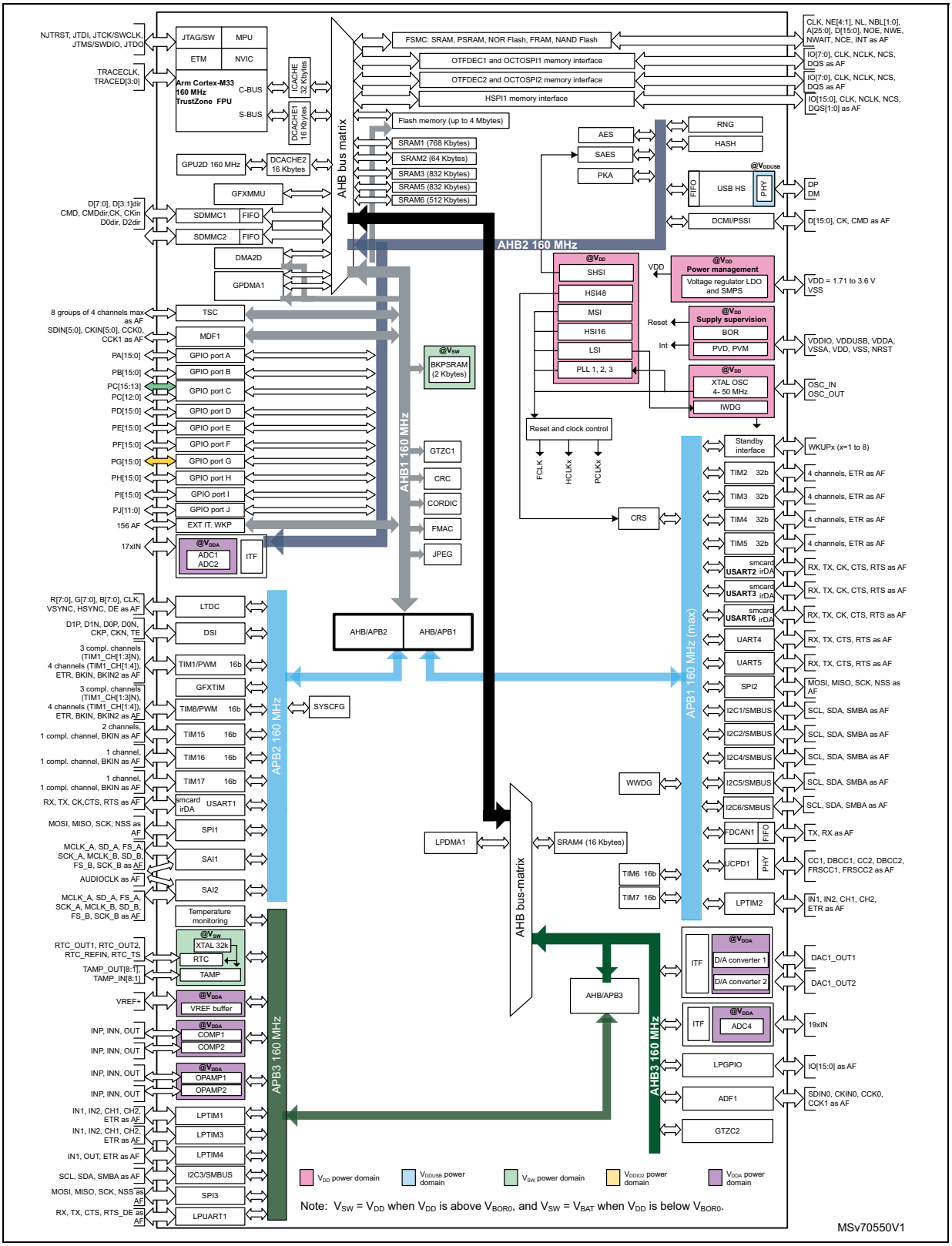

3 Functional overview

3.1 Arm Cortex-M33 core with TrustZone and FPU

The Cortex-M33 with TrustZone and FPU is a highly energy-efficient processor designed for microcontrollers and deeply embedded applications, especially those requiring efficient security.

The Cortex-M33 processor delivers a high computational performance with low-power consumption and an advanced response to interrupts. It features:

- Arm TrustZone technology, using the Armv8-M main extension supporting secure and nonsecure states
- MPUs (memory protection units), supporting up to 16 regions for secure and non-secure applications
- Configurable SAU (secure attribute unit) supporting up to eight memory regions as secure or nonsecure
- Floating-point arithmetic functionality with support for single precision arithmetic

The processor supports a set of DSP instructions that allows an efficient signal processing and a complex algorithm execution.

The Cortex-M33 processor supports the following bus interfaces:

- System AHB bus:

  The S-AHB (system AHB) bus interface is used for any instruction fetch and data access to the memory-mapped SRAM, peripheral, external RAM and external device, or Vendor_SYS regions of the Armv8-M memory map.
- Code AHB bus:

  The C-AHB (code AHB) bus interface is used for any instruction fetch and data access to the code region of the Armv8-M memory map.

Figure 1 shows the general block diagram of the STM32U5Gxxx devices.

3.2 ART Accelerator (ICACHE and DCACHE)

3.2.1 Instruction cache (ICACHE)

The ICACHE is introduced on C-AHB code bus of Cortex-M33 processor to improve performance when fetching instruction (or data) from both internal and external memories.

ICACHE offers the following features:

- Multi-bus interface:
  - Slave port receiving the memory requests from the Cortex-M33 C-AHB code execution port
  - Master1 port performing refill requests to internal memories (flash memory and SRAMs)
  - Master2 port performing refill requests to external memories (external flash memory and RAMs through Octo-SPI and FMC interfaces)
  - Second slave port dedicated to ICACHE registers access

- Close to zero wait-states instructions/data access performance:
  - 0 wait-state on cache hit
  - Hit-under-miss capability, allowing to serve new processor requests while a line refill (due to a previous cache miss) is still ongoing
  - Critical-word-first refill policy, minimizing processor stalls on cache miss
  - Hit ratio improved by two-ways set-associative architecture and pLRU-t replacement policy (pseudo-least-recently-used, based on binary tree), algorithm with best complexity/performance balance
  - Dual master ports allowing to decouple internal and external memory traffics, on fast and slow buses, respectively; also minimizing impact on interrupt latency
  - Optimal cache line refill thanks to AHB burst transactions (of the cache line size)
  - Performance monitoring by means of a hit counter and a miss counter
- Extension of cacheable region beyond the code memory space, by means of address remapping logic that allows four cacheable external regions to be defined
- Power consumption reduced intrinsically (more accesses to cache memory rather to bigger main memories); even improved by configuring ICACHE as direct mapped (rather than the default two-ways set-associative mode)
- TrustZone security support
- Maintenance operation for software management of cache coherency
- Error management: detection of unexpected cacheable write access, with optional interrupt raising

3.2.2 Data cache (DCACHE)

The DCACHE is introduced on S-AHB system bus of Cortex-M33 processor to improve the performance of data traffic to/from external memories.

DCACHE offers the following features:

- Multi-bus interface:
  - Slave port receiving the memory requests from the Cortex-M33 S-AHB system port
  - Master port performing refill requests to external memories (external flash memory and RAMs through Octo-SPI and FMC interfaces)
  - Second slave port dedicated to DCACHE registers access
- Close to zero wait-states external data access performance:
  - Zero wait-states on cache hit
  - Hit-under-miss capability, allowing to serve new processor requests to cached data, while a line refill (due to a previous cache miss) is still ongoing
  - Critical-word-first refill policy for read transactions, minimizing processor stalls on cache miss
  - Hit ratio improved by two-ways set-associative architecture and pLRU-t replacement policy (pseudo-least-recently-used, based on binary tree), algorithm with best complexity/performance balance
  - Optimal cache line refill thanks to AHB burst transactions (of the cache line size)
  - Performance monitoring by means of two hit counters (for read and write) and two miss counters (for read and write)

- Supported cache accesses:
  - Both write-back and write-through policies supported (selectable with AHB bufferable attribute)
  - Read and write-back always allocated
  - Write-through always non-allocated (write-around)
  - Byte, half-word and word writes supported
- TrustZone security support
- Maintenance operations for software management of cache coherency:
  - Full cache invalidation (non interruptible)
  - Address range clean and/or invalidate operations (background task, interruptible)
- Error management: detection of error for master port request initiated by DCACHE (line eviction or clean operation), with optional interrupt raising

3.3 Memory protection unit

The MPU (memory protection unit) is used to manage the CPU accesses to the memory and to prevent one task to accidentally corrupt the memory or the resources used by any other active task. This memory area is organized into up to 16 protected areas.
The MPU regions and registers are banked across secure and nonsecure states.

The MPU is especially helpful for applications where some critical or certified code must be protected against the misbehavior of other tasks. It is usually managed by a RTOS (real-time operating system).

If a program accesses a memory location that is prohibited by the MPU, the RTOS can detect it and take action. In a RTOS environment, the kernel can dynamically update the MPU area setting based on the process to be executed.

The MPU is optional and can be bypassed for applications that do not need it.

3.4 Embedded flash memory

The devices feature 4 Mbytes of embedded flash memory that is available for storing programs and data. The flash memory supports 10 000 cycles and up to 100 000 cycles on 512 Kbytes. A 128-bit instruction prefetch is implemented and can optionally be enabled.

The flash memory interface features:

- Dual-bank operating modes
- Read-while-write (RWW)

This allows a read operation to be performed from one bank while an erase or program operation is performed to the other bank. The dual-bank boot is also supported. Each bank contains 256 pages of 8 Kbytes. The flash memory also embeds 512-byte OTP (one-time programmable) for user data.

The whole non-volatile memory embeds the ECC (error correction code) feature supporting:

- single-error detection and correction
- double-error detection
- ECC fail address report

Flash memory protection

The option bytes allow the configuration of flexible protections:

- write protection (WRP) to protect areas against erasing and programming. Two areas per bank can be selected with 8-Kbyte granularity.
- RDP (readout protection) to protect the whole memory, has four levels of protection available (see *Table 3* and *Table 4*):
  - Level 0: no readout protection
  - Level 0.5: available only when TrustZone is enabled

    All read/write operations (if no write protection is set) from/to the nonsecure flash memory are possible. The debug access to secure area is prohibited.
    Debug access to nonsecure area remains possible.
  - Level 1: memory readout protection

    The flash memory cannot be read from or written to if either the debug features are connected or the boot in RAM or bootloader are selected. If TrustZone is enabled, the nonsecure debug is possible and the boot in SRAM is not possible. Regressions from Level 1 to lower levels can be protected by password authentication.
  - Level 2: chip readout protection

    The debug features, the boot in RAM and the bootloader selection are disabled. A secure secret key can be configured in the secure options to allow the regression capability from Level 2 to Level 1. By default (key not configured), this Level 2 selection is irreversible and JTAG/SWD interfaces are disabled. If the secret key was previously configured in lower RDP levels, the device enables the RDP regression from Level 2 to Level 1 after password authentication through JTAG/SWD interface.

Note: In order to reach the best protection level, it is recommended to activate TrustZone and to set the RDP Level 2 with password authentication regression enabled.

Table 3. Access status versus protection level and execution modes when TZEN = 0

Area	RDP level	User execution (boot from flash memory)			Debug/boot from RAM/ bootloader(1)		
		Read	Write	Erase	Read	Write	Erase
Flash main memory	1	Yes	Yes	Yes	No	No	No(4)
	2	Yes	Yes	Yes	N/A	N/A	N/A
System memory (2)	1	Yes	No	No	Yes	No	No
	2	Yes	No	No	N/A	N/A	N/A
Option bytes(3)	1	Yes	Yes(4)	N/A	Yes	Yes(4)	N/A
	2	Yes	No(5)	N/A	N/A	N/A	N/A
OTP	1	Yes	Yes(6)	N/A	Yes	Yes(6)	N/A
	2	Yes	Yes(6)	N/A	N/A	N/A	N/A

Table 3. Access status versus protection level and execution modes when TZEN = 0 (continued)

Area	RDP level	User execution (boot from flash memory)			Debug/boot from RAM/ bootloader(1)		
		Read	Write	Erase	Read	Write	Erase
Backup registers	1	Yes	Yes	N/A	No	No	N/A(7)
	2	Yes	Yes	N/A	N/A	N/A	N/A
SRAM2/backup RAM	1	Yes	Yes	N/A	No	No	N/A(8)
	2	Yes	Yes	N/A	N/A	N/A	N/A
OTFDEC regions (Octo-SPI)	1	Yes	Yes	Yes	No(9)	Yes	Yes
	2	Yes	Yes	Yes	N/A	N/A	N/A

1. When the protection level 2 is active, the debug port, the boot from RAM and the boot from system memory are disabled.
2. The system memory is only read-accessible, whatever the protection level (0, 1 or 2) and execution mode.
3. Option bytes are only accessible through the flash memory registers and OPSTRT bit.
4. The flash main memory is erased when the RDP option byte changes from level 1 to level 0.
5. SWAP_BANK option bit can be modified.
6. OTP can only be written once.
7. The backup registers are erased when RDP changes from level 1 to level 0.
8. All SRAMs are erased when RDP changes from level 1 to level 0.
9. The OTFDEC keys are erased when the RDP option byte changes from level 1 to level 0.

Table 4. Access status versus protection level and execution modes when TZEN = 1

Area	RDP level	User execution (boot from flash memory)			Debug/ bootloader(1)		
		Read	Write	Erase	Read	Write	Erase
Flash main memory	0.5	Yes	Yes	Yes	Yes(2)	Yes(2)	Yes(2)
	1	Yes	Yes	Yes	No	No	No(5)
	2	Yes	Yes	Yes	N/A	N/A	N/A
System memory (3)	0.5	Yes	No	No	Yes	No	No
	1	Yes	No	No	Yes	No	No
	2	Yes	No	No	N/A	N/A	N/A
Option bytes(4)	0.5	Yes	Yes(5)	N/A	Yes	Yes (5)	N/A
	1	Yes	Yes(5)	N/A	Yes	Yes(5)	N/A
	2	Yes	No(6)	N/A	N/A	N/A	N/A

Table 4. Access status versus protection level and execution modes when TZEN = 1 (continued)

Area	RDP level	User execution (boot from flash memory)			Debug/ bootloader[1]		
		Read	Write	Erase	Read	Write	Erase
OTP	0.5	Yes	Yes[7]	N/A	Yes	Yes[7]	N/A
	1	Yes	Yes[7]	N/A	Yes	Yes[7]	N/A
	2	Yes	Yes[7]	N/A	N/A	N/A	N/A
Backup registers	0.5	Yes	Yes	N/A	Yes[2]	Yes[2]	N/A[8]
	1	Yes	Yes	N/A	No	No	N/A[8]
	2	Yes	Yes	N/A	N/A	N/A	N/A
SRAM2/backup RAM	0.5	Yes	Yes	N/A	Yes[2]	Yes[2]	N/A[9]
	1	Yes	Yes	N/A	No	No	N/A[9]
	2	Yes	Yes	N/A	N/A	N/A	N/A
OTFDEC regions (Octo-SPI)	0.5	Yes	Yes	Yes	No[10]	Yes	Yes
	1	Yes	Yes	Yes	No[10]	Yes	Yes
	2	Yes	Yes	Yes	N/A	N/A	N/A

1. When the protection level 2 is active, the debug port and the bootloader mode are disabled.
2. Depends on TrustZone security access rights.
3. The system memory is only read-accessible, whatever the protection level (0, 1 or 2) and execution mode.
4. Option bytes are only accessible through the flash memory registers and OPSTRT bit.
5. The flash main memory is erased when the RDP option byte regresses from level 1 to level 0.
6. SWAP_BANK option bit can be modified.
7. OTP can only be written once.
8. The backup registers are erased when RDP changes from level 1 to level 0.
9. All SRAMs are erased when RDP changes from level 1 to level 0.
10. The OTFDEC keys are erased when the RDP option byte changes from level 1 to level 0.

3.4.1 Additional flash memory protections with TrustZone activated

When the TrustZone security is enabled through option bytes, the whole flash memory is secure after reset and the following protections are available:

- non-volatile watermark-based secure flash memory area

  The secure area can be accessed only in Secure mode. One area per bank can be selected with a page granularity.
- secure HDP (hide protection area)

  It is part of the flash memory secure area and can be protected to deny an access to this area by any data read, write and instruction fetch. For example, a software code in the secure flash memory hide protection area can be executed only once and deny any

further access to this area until next system reset. One area per bank can be selected at the beginning of the secure area.

- volatile block-based secure flash memory area

  Each page can be programmed on-the-fly as secure or nonsecure.

3.4.2 FLASH privilege protection

Each flash memory page can be programmed on the fly as privileged or unprivileged.

3.5 Embedded SRAMs

Seven SRAMs are embedded in the STM32U5Gxxx devices, each with specific features. SRAM1, SRAM2, SRAM3, SRAM5, and SRAM6 are the main SRAMs. SRAM4 is in the SRAM used for peripherals LPBAM (low-power background autonomous mode) in Stop 2 mode.

These SRAMs are made of several blocks that can be powered down in Stop mode to reduce consumption:

- SRAM1: 12 64-Kbyte blocks (total 768 Kbytes)
- SRAM2: 8-Kbyte + 56-Kbyte blocks (total 64 Kbytes) with optional ECC. In addition SRAM2 blocks can be retained in Standby mode.
- SRAM3: 13 64-Kbyte blocks (total 832 Kbytes) with optional ECC. When ECC is enabled, 256 Kbytes support ECC and 512 Kbytes of SRAM3 can be accessed without ECC.
- SRAM4: 16 Kbytes
- SRAM5: 13 64-Kbyte blocks (total 832 Kbytes)
- SRAM6: 8 64-Kbyte blocks (total 512 Kbytes)
- BKPSRAM (backup SRAM): 2 Kbytes with optional ECC. The BKPSRAM can be retained in all low-power modes and when V_{DD} is off in V_{BAT} mode, but not in Shutdown mode.

3.5.1 SRAMs TrustZone security

When the TrustZone security is enabled, all SRAMs are secure after reset. The SRAM1, SRAM2, SRAM3, SRAM4, SRAM5, and SRAM6 can be programmed as secure or nonsecure by blocks, using the MPCBB (block-based memory protection controller).

The granularity of SRAM secure block based is a page of 512 bytes. Backup SRAM regions can be programmed as secure or nonsecure with watermark, using the TZSC (TrustZone security controller) in the GTZC (global TrustZone controller).

3.5.2 SRAMs privilege protection

The SRAM1, SRAM2, SRAM3, SRAM4, SRAM5, and SRAM6 can be programmed as privileged or unprivileged by blocks, using the MPCBB. The granularity of SRAM privilege block based is a page of 512 bytes. Backup SRAM regions can be programmed as privileged or unprivileged with watermark, using the TZSC (TrustZone security controller) in the GTZC (global TrustZone controller).

3.6 TrustZone security architecture

The security architecture is based on Arm TrustZone with the Armv8-M main extension.

The TrustZone security is activated by the TZEN option bit in the FLASH_OPTR register.

When the TrustZone is enabled, the SAU (security attribution unit) and IDAU (implementation defined attribution unit) define the access permissions based on secure and nonsecure state.

- SAU: up to eight SAU configurable regions are available for security attribution.
- IDAU: It provides a first memory partition as nonsecure or nonsecure callable attributes. It is then combined with the results from the SAU security attribution and the higher security state is selected.

Based on IDAU security attribution, the flash memory, system SRAM and peripheral memory space is aliased twice for secure and nonsecure states. However, the external memory space is not aliased.

The table below shows an example of typical SAU region configuration based on IDAU regions. The user can split and choose the secure, nonsecure or NSC regions for external memories as needed.

Table 5. Example of memory map security attribution versus SAU configuration regions

Region description	Address range	IDAU security attribution	SAU security attribution typical configuration	Final security attribution
Code - external memories	0x0000 0000 0x07FF FFFF	Nonsecure	Secure or nonsecure or NSC(1)	Secure or nonsecure or NSC
Code - FLASH and SRAM	0x0800 0000 0x0BFF FFFF	Nonsecure	Nonsecure	Nonsecure
	0x0C00 0000 0x0FFF FFFF	NSC	Secure or NSC	Secure or NSC
Code - external memories	0x1000 0000 0x17FF FFFF	Nonsecure	Nonsecure	
	0x1800 0000 0x1FFF FFFF			
SRAM	0x2000 0000 0x2FFF FFFF	Nonsecure		
	0x3000 0000 0x3FFF FFFF	NSC	Secure or NSC	Secure or NSC
Peripherals	0x4000 0000 0x4FFF FFFF	Nonsecure	Nonsecure	Nonsecure
	0x5000 0000 0x5FFF FFFF	NSC	Secure or NSC	Secure or NSC
External memories	0x6000 0000 0xDFFF FFFF	Nonsecure	Secure or nonsecure or NSC	Secure or nonsecure or NSC

1. NSC = nonsecure callable.

3.6.1 TrustZone peripheral classification

When the TrustZone security is active, a peripheral can be either securable or TrustZone-aware type as follows:

- securable: peripheral protected by an AHB/APB firewall gate that is controlled from TZSC to define security properties
- TrustZone-aware: peripheral connected directly to AHB or APB bus and implementing a specific TrustZone behavior such as a subset of registers being secure

3.6.2 Default TrustZone security state

The default system security state is detailed below:

- CPU:
  - Cortex-M33 is in secure state after reset. The boot address must be in secure address.
- Memory map:
  - SAU is fully secure after reset. Consequently, all memory map is fully secure. Up to eight SAU configurable regions are available for security attribution.
- Flash memory:
  - Flash memory security area is defined by watermark user options.
  - Flash memory block based area is nonsecure after reset.
- SRAMs:
  - All SRAMs are secure after reset. MPCBB (memory protection block based controller) is secure.
- External memories:
  - FSMC, OCTOSPI banks are secure after reset. MPCWMx (memory protection watermark based controller) is secure.
- Peripherals
  - Securable peripherals are nonsecure after reset.
  - TrustZone-aware peripherals are nonsecure after reset. Their secure configuration registers are secure.
- All GPIOs are secure after reset.
- Interrupts:
  - NVIC: All interrupts are secure after reset. NVIC is banked for secure and nonsecure state.
- TZIC: All illegal access interrupts are disabled after reset.

3.7 Boot modes

At startup, a BOOT0 pin, nBOOT0, NSBOOTADDx[24:0] (x = 0,1) and SECBOOTADD0[24:0] option bytes are used to select the boot memory address that includes:

- Boot from any address in user flash memory.
- Boot from system memory bootloader.
- Boot from any address in embedded SRAM.
- Boot from RSS (root security services).

The BOOT0 value comes from the PH3-BOOT0 pin or from an option bit depending on the value of a user option bit to free the GPIO pad if needed.

The bootloader is located in the system memory, programmed by ST during production. The bootloader is used to reprogram the flash memory by using USART, I2C, SPI, FDCAN, or USB HS in device mode through the DFU (device firmware upgrade).

The bootloader is available on all devices. Refer to the application note *STM32 microcontroller system memory boot mode* (AN2606) for more details.

The RSS are embedded in a flash memory area named secure information block, programmed during ST production.

For example, the RSS enable the SFI (secure firmware installation), thanks to the RSSe SFI (RSS extension firmware).

This feature allows customer to produce the confidentiality of the firmware to be provisioned into the STM32, when production is sub-contracted to untrusted third party.

The RSS are available on all devices, after enabling the TrustZone through the TZEN option bit. Refer to the application note *Overview secure firmware install* (SFI) (AN4992) for more details.

Refer to *Table 6* and *Table 7* for boot modes when TrustZone is disabled and enabled respectively.

Table 6. Boot modes when TrustZone is disabled (TZEN = 0)

nBOOT0 FLASH_ OPTR[27]	BOOT0 pin PH3	nSWBOOT0 FLASH_ OPTR[26]	Boot address option-byte selection	Boot area	ST programmed default value
-	0	1	NSBOOTADD0[24:0]	Boot address defined by user option bytes NSBOOTADD0[24:0]	Flash: 0x0800 0000
-	1	1	NSBOOTADD1[24:0]	Boot address defined by user option bytes NSBOOTADD1[24:0]	Bootloader: 0x0BF9 0000
1	-	0	NSBOOTADD0[24:0]	Boot address defined by user option bytes NSBOOTADD0[24:0]	Flash: 0x0800 0000
0	-	0	NSBOOTADD1[24:0]	Boot address defined by user option bytes NSBOOTADD1[24:0]	Bootloader: 0x0BF9 0000

When TrustZone is enabled by setting the TZEN option bit, the boot space must be in the secure area. The SECBOOTADD0[24:0] option bytes are used to select the boot secure memory address.

A unique boot entry option can be selected by setting the BOOT_LOCK option bit, allowing to boot always at the address selected by SECBOOTADD0[24:0] option bytes. All other boot options are ignored.

Table 7. Boot modes when TrustZone is enabled (TZEN = 1)

BOOT_ LOCK	nBOOT0 FLASH_ OPTR[27]	BOOT0 pin PH3	nSWBOOT0 FLASH_ OPTR[26]	RSS com-mand	Boot address option-byte selection	Boot area	ST programmed default value
0	-	0	1	0	SECBOOTADD0 [24:0]	Secure boot address defined by user option bytes SECBOOTADD0[24:0]	Flash: 0x0C00 0000
	-	1	1	0	N/A	RSS	RSS: 0x0FF8 0000
	1	-	0	0	SECBOOTADD0 [24:0]	Secure boot address defined by user option bytes SECBOOTADD0[24:0]	Flash: 0x0C00 0000
	0	-	0	0	N/A	RSS	RSS: 0x0FF8 0000
	-	-	-	≠0	N/A	RSS	RSS: 0x0FF8 0000
1	-	-	-	-	SECBOOTADD0 [24:0]	Secure boot address defined by user option bytes SECBOOTADD0[24:0]	Flash: 0x0C00 0000

The boot address option bytes allow any boot memory address to be programmed. However, the allowed address space depends on the flash memory RDP level.

If the programmed boot memory address is out of the allowed memory mapped area when RDP level is 0.5 or more, the default boot address is forced either in secure flash memory or nonsecure flash memory, depending on TrustZone security option as described in the table below.

Table 8. Boot space versus RDP protection

RDP	TZEN = 1	TZEN = 0
0	Any boot address	Any boot address
0.5	Boot address only in RSS or secure flash memory: 0x0C00 0000 - 0x0C3F FFFF Otherwise, forced boot address is 0x0FF8 0000.	N/A
1		Any boot address
2		Boot address only in flash memory: 0x0800 0000 - 0x083F FFFF Otherwise, forced boot address is 0x0800 0000.

3.8 Global TrustZone controller (GTZC)

GTZC is used to configure TrustZone and privileged attributes within the full system.

The GTZC includes three different sub-blocks:

- TZSC: TrustZone security controller

  This sub-block defines the secure/privilege state of slave/master peripherals. It also controls the nonsecure area size for the watermark memory peripheral controller (MPCWM). The TZSC block informs some peripherals (such as RCC or GPIOs) about the secure status of each securable peripheral, by sharing with RCC and I/O logic.
- TZIC: TrustZone illegal access controller

  This sub-block gathers all security illegal access events in the system and generates a secure interrupt towards NVIC.
- MPCBB: MPCBB: block-based memory protection controller

  This sub-block controls secure states of all memory blocks (512-byte pages) of the associated SRAM. This peripheral aims at configuring the internal RAM in a TrustZone system product having segmented SRAM with programmable-security and privileged attributes.

The GTZC main features are:

- Three independent 32-bit AHB interfaces for TZSC, TZIC and MPCBB
- Secure and nonsecure access supported for privileged/unprivileged part of TZSC
- Set of registers to define product security settings:
  - Secure/privilege regions for external memories
  - Secure/privilege access mode for securable peripherals
  - Secure/privilege access mode for securable legacy masters

3.9 Power supply management

The PWR (power controller) main features are:

- Power supplies and supply domains
  - Core domain (V_{CORE})
  - V_{DD} domain
  - Backup domain (V_{BAT})
  - Analog domain (V_{DDA})
  - SMPS power stage (V_{DDSMPS}, available only on SMPS packages)
  - V_{DDIO2} domain
  - V_{DDUSB} and optional $V_{DD11USB}$ for USB transceiver
  - V_{DDDSI} and $V_{DD11DSI}$ for DSI transceiver
- System supply voltage regulation
  - SMPS step down converter
  - Voltage regulator (LDO)

- Power supply supervision
  - BOR monitor
  - PVD monitor
  - PVM monitor (V_{DDA}, V_{DDUSB}, V_{DDIO2})
- Power management
  - Operating modes
  - Voltage scaling control
  - Low-power modes
- V_{BAT} battery charging
- TrustZone security and privileged protection

3.9.1 Power supply schemes

The devices require a 1.71 V to 3.6 V V_{DD} operating voltage supply. Several independent supplies can be provided for specific peripherals:

- V_{DD} = 1.71 V to 3.6 V (functionality guaranteed down to V_{BORx} min value)

  V_{DD} is the external power supply for the I/Os, the internal regulator and the system analog such as reset, power management and internal clocks. It is provided externally through the VDD pins.
- V_{DDA} = 1.58 V (COMPs) / 1.6 V (DACs, OPAMPs) / 1.62 V (ADCs) / 1.8 V (VREFBUF) to 3.6 V

  V_{DDA} is the external analog power supply for ADCs, DACs, voltage reference buffer, operational amplifiers and comparators. The V_{DDA} voltage level is independent from the V_{DD} voltage and must be connected to VDD or VSS pin (preferably to VDD) when these peripherals are not used.
- V_{DDSMPS} = 1.71 V to 3.6 V

  V_{DDSMPS} is the external power supply for the SMPS step down converter. It is provided externally through VDDSMPS supply pin and must be connected to the same supply than VDD.
- V_{LXSMPS} is the switched SMPS step down converter output.

Note: The SMPS power supply pins are available only on a specific package with SMPS step down converter option.

- V_{DDUSB} = 3.0 V to 3.6 V

  V_{DDUSB} is the external independent power supply for USB transceivers. V_{DDUSB} voltage level is independent from the V_{DD} voltage and must be connected to VDD or VSS pin (preferably to VDD) when the USB is not used.
- $V_{DD11USB}$ = 1.0 V to 1.26 V

  $V_{DD11USB}$ is the external power supply for the USB transceiver. This supply is only available on specific packages and must be connected to VDD11.
- V_{DDIO2} = 1.08 V to 3.6 V

  V_{DDIO2} is the external power supply for 14 I/Os (port G[15:2]). The V_{DDIO2} voltage level is independent from the V_{DD} voltage and must be connected to VDD or VSS pin (preferably to VDD) when PG[15:2] are not used.
- V_{BAT} = 1.65 V to 3.6 V (functionality guaranteed down to V_{BOR_VBAT} min value)

  V_{BAT} is the power supply for RTC, TAMP, external clock 32 kHz oscillator and backup registers (through power switch) when V_{DD} is not present.

- V_{DDDSI} = 1.71 V to 3.6 V

  V_{DDDSI} is the external power supply for the DSI controller. It is provided externally through VDDDSI supply pin, and must be connected to the same supply as VDD pin.
- $V_{DD11DSI}$ = 1.0 V to 1.26 V

  $V_{DD11DSI}$ is the external power supply for the DSI transceiver and must be connected to VDD11.
- V_{REF-}, V_{REF+}

  V_{REF+} is the input reference voltage for ADCs and DACs. It is also the output of the internal voltage reference buffer when enabled.

  V_{REF+} can be grounded when ADC and DAC are not active.

  The internal voltage reference buffer supports four outputs:
  - V_{REF+} around 1.5 V. This requires $V_{DDA} \geq 1.8$ V.
  - V_{REF+} around 1.8 V. This requires $V_{DDA} \geq 2.1$ V.
  - V_{REF+} around 2.048 V. This requires $V_{DDA} \geq 2.4$ V.
  - V_{REF+} around 2.5 V. This requires $V_{DDA} \geq 2.8$ V.

  VREF- and VREF+ pins are not available on all packages. When not available, they are bonded to VSSA and VDDA, respectively.

  When the VREF+ is double-bonded with VDDA in a package, the internal voltage reference buffer is not available and must be kept disabled.

  V_{REF-} must always be equal to V_{SSA}.

The STM32U5Gxxx devices embed two regulators: one LDO and one SMPS in parallel to provide the V_{CORE} supply for digital peripherals, SRAM1, SRAM2, SRAM3, SRAM4, SRAM5, SRAM6, and embedded flash memory. The SMPS and LDO generates this voltage on VDD11 (two or three pins) with a total external capacitor of 4.7 µF typical. SMPS requires an external coil of 2.2 µH typical.

Both regulators can provide four different voltages (voltage scaling) and can operate in Stop modes.

Figure 2. STM32U5GxxxxxQ power supply overview

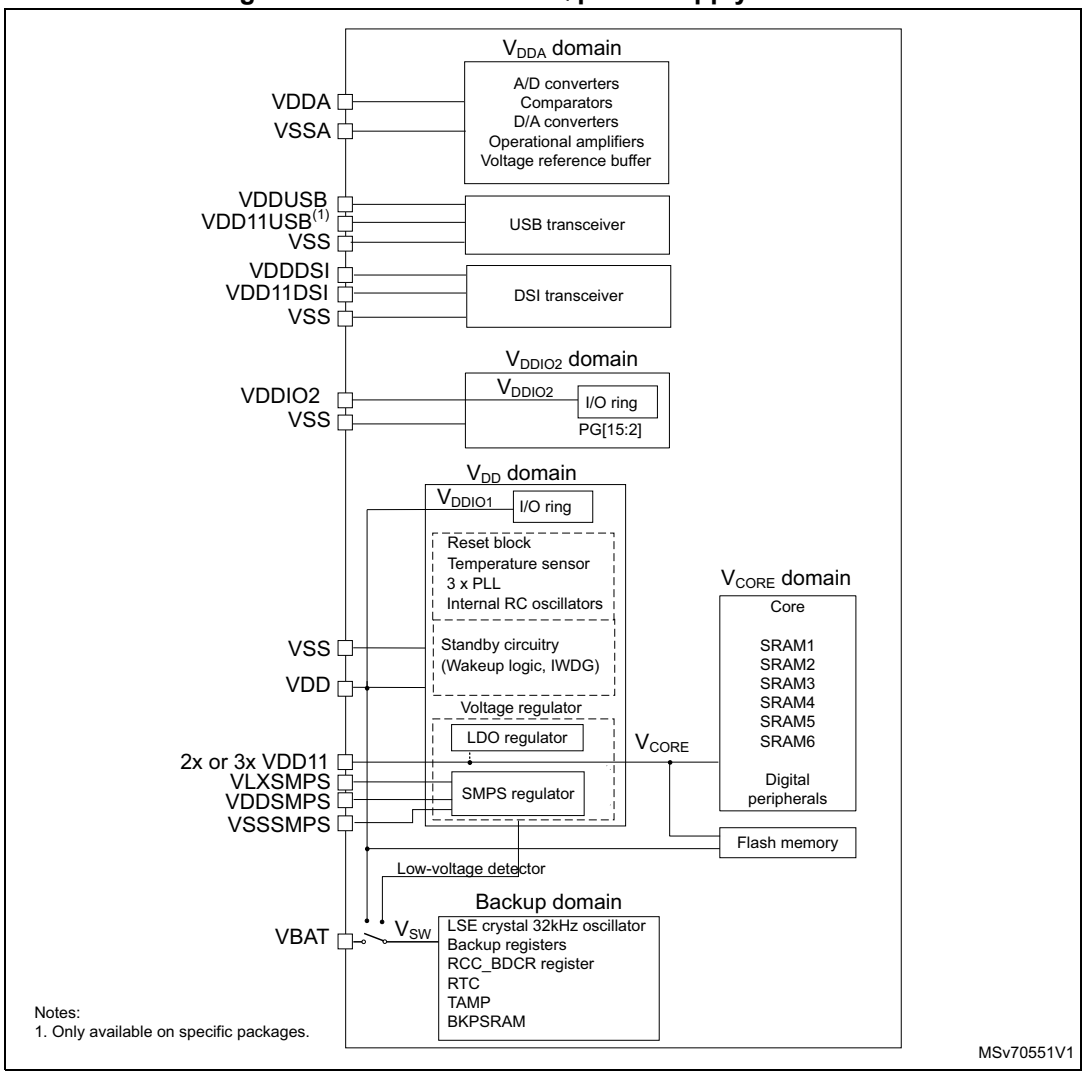

In this document, V_{DDIOx} refers to the I/O power supply. V_{DDIOx} can be V_{DDIO1} (which is supplied by V_{DD}), V_{DDIO2} (independent power supply for PG[15:2]), or V_{SW} (supplying PC13, PC14, PC15, and all FT_t I/Os in VBAT mode).

$V_{SW} = V_{DD}$ when V_{DD} is above V_{BOR0}, and $V_{SW} = V_{BAT}$ when V_{DD} is below V_{BOR0}.

During power-up and power-down phases, the following power sequence requirements must be respected:

- When V_{DD} is below 1 V, other power supplies (V_{DDA}, V_{DDIO2}, V_{DDUSB}) must remain below V_{DD} + 300 mV.
- When V_{DD} is above 1 V, all power supplies are independent.
- During the power-down phase, V_{DD} can temporarily become lower than other supplies only if the energy provided to the MCU remains below 1 mJ. This allows external decoupling capacitors to be discharged with different time constants during the power-down transient phase.

Figure 3. Power-up /down sequence

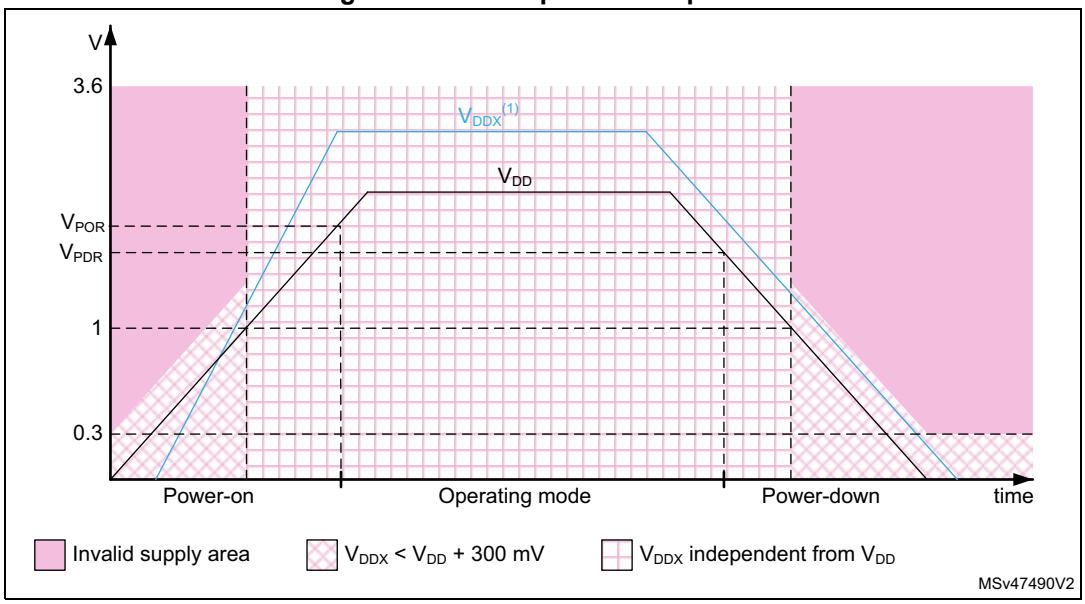

1. V_{DDX} refers to any power supply among V_{DDA}, V_{DDUSB}, and V_{DDIO2}.

3.9.2 Power supply supervisor

The devices have an integrated ultra-low-power BOR (Brownout reset) active in all modes (except for Shutdown mode). The BOR ensures proper operation of the device after power on and during power down. The device remains in reset mode when the monitored supply voltage V_{DD} is below a specified threshold, without the need for an external reset circuit.

The lowest BOR level is 1.71 V at power on, and other higher thresholds can be selected through option bytes.The devices feature an embedded PVD (programmable voltage detector) that monitors the V_{DD} power supply and compares it to the V_{PVD} threshold.

An interrupt can be generated when V_{DD} drops below and/or rises above the V_{PVD} threshold. The interrupt service routine can then generate a warning message and/or put the MCU into a safe state. The PVD is enabled by software.

In addition, the devices embed a peripheral voltage monitor that compares the independent supply voltages V_{DDA}, V_{DDUSB} and V_{DDIO2} to ensure that the peripheral is in its functional supply range.

The devices support dynamic voltage scaling to optimize its power consumption in Run mode. The voltage from the main regulator that supplies the logic (V_{CORE}) can be adjusted according to the system's maximum operating frequency.

The main regulator operates in the following ranges:

- Range 1 (V_{CORE} = 1.2 V) with CPU and peripherals running at up to 160 MHz
- Range 2 (V_{CORE} = 1.1 V) with CPU and peripherals running at up to 110 MHz
- Range 3 (V_{CORE} = 1.0 V) with CPU and peripherals running at up to 55 MHz
- Range 4 (V_{CORE} = 0.9 V) with CPU and peripherals running at up to 25 MHz

3.9.3 Low-power modes

The ultra-low-power STM32U5Gxxx devices support seven low-power modes to achieve the best compromise between low-power consumption, short startup time, available peripherals and available wake-up sources.

The table below details the related low-power modes.

Table 9. STM32U5Gxxx modes overview

Mode	Regulator (1)	CPU	Flash	SRAM	Clocks	DMA and peripherals(2)	Wake-up source
Run	Range 1	Yes	ON(3)	ON	Any	All	N/A
	Range 2						
	Range 3					All except DSI and OTG_HS	
	Range 4					All except DSI, LTDC, OTG_HS and UCPD	
Sleep	Range 1	No	ON	ON(4)	Any	All	Any interrupt or event
	Range 2						
	Range 3					All except DSI and OTG_HS	
	Range 4					All except DSI, LTDC, OTG_HS and UCPD	
Stop 0	Range 1	No	OFF	ON(5)	LSE LSI (6)	BOR, PVD, PVM, RTC, TAMP, IWDG, TEMP (temp. sensor), VREFBUF, ADC4(7), DAC1 (2 channels)(8), COMPx (x = 1, 2), OPAMPx (x = 1,2), USARTx (x = 1...6)(9), LPUART1, SPIx (x = 1...3)(10), I2Cx (x = 1...6)(11), LPTIMx (x = 1...4)(12), MDF1(13), ADF1, GPIO, LPGPIO, GPDMA1(14), LPDMA1 All other peripherals are frozen.	Reset pin, all I/Os BOR, PVD, PVM, RTC, TAMP, IWDG, TEMP, ADC4 DAC1 (2 channels), COMPx (x = 1, 2), USARTx (x = 1...6), LPUART1, SPIx (x = 1...3), I2Cx (x = 1...6), LPTIMx (x = 1...4), MDF1, ADF1, GPDMA1, LPDMA1, OTG_HS, UCPD
	Range 2						
	Range 3						
	Range 4						
Stop 1	LPR						

Table 9. STM32U5Gxxx modes overview (continued)

Mode	Regulator (1)	CPU	Flash	SRAM	Clocks	DMA and peripherals(2)	Wake-up source
Stop 2	LPR	No	OFF	ON(5)	LSE LSI	BOR, PVD, PVM, RTC, TAMP, IWDG, TEMP, VREFBUF, ADC4, DAC1 (2 channels), COMPx (x = 1, 2) , OPAMPx (x = 1, 2), LPUART1, SPI3, I2C3, LPTIMx (x = 1,3,4), ADF1, LPGPIO, LPDMA1 All other peripherals are frozen.	Reset pin, all I/Os BOR, PVD, PVM, RTC, TAMP, IWDG, TEMP, ADC4, COMPx (x = 1, 2), LPUART1, SPI3, I2C3, LPTIMx (x = 1,3,4), ADF1, LPDMA1
Stop 3	LPR	No	OFF	ON(5)	LSE LSI	BOR, RTC, TAMP, IWDG, DAC1 (2 static channels), OPAMPx (x = 1, 2) All other peripherals are frozen. I/O configuration can be floating, pull-up or pull-down.	Reset pin, 24 I/Os (WKUPx), BOR, RTC, TAMP, IWDG
Standby	LPR	Powered off	OFF	64-, 56- or 8-Kbyte SRAM2 2-Kbyte BKPSRAM(5) all other SRAMs powered off	LSE LSI	BOR, RTC, TAMP, IWDG All other peripherals are powered off. I/O configuration can be floating, pull-up or pull-down.	Reset pin, 24 I/Os (WKUPx), BOR, RTC, TAMP, IWDG
	OFF			Powered off			
Shutdown	OFF	Powered off	OFF	Powered off	LSE	RTC, TAMP All other peripherals are powered off. I/O configuration can be floating, pull-up or pull-down(15).	Reset pin 24 I/Os (WKUPx) RTC, TAMP

1. LPR means that the main regulator is OFF and the low-power regulator is ON.
2. All peripherals can be active or clock gated to save power consumption.
3. The flash memory can be put in power-down and its clock can be gated off when executing from SRAM. One bank can also be put in power-down mode.
4. The SRAM1, SRAM2, SRAM3, SRAM4, SRAM5, SRAM6 and BKPSRAM clocks can be gated on or off independently.
5. The SRAM can be individually powered off to save power consumption.
6. MSI and HSI16 can be temporary enabled upon peripheral request, for autonomous functions with DMA or wake-up from Stop event detections.
7. The ADC4 conversion is functional and autonomous with DMA in Stop mode, and can generate a wake-up interrupt on conversion events.
8. DAC1 is the digital-to-analog (D/A) converter controller instance name. This instance controls two D/A converters also called "two channels". The DAC conversions are functional and autonomous with DMA in Stop mode.
9. U(S)ART and LPUART transmission and reception is functional and autonomous with DMA in Stop mode, and can generate a wake-up interrupt on transfer events.
10. SPI transmission and reception is functional and autonomous with DMA in Stop mode, and can generate a wake-up interrupt on transfer events.
11. I2C transmission and reception is functional and autonomous with DMA in Stop mode, and can generate a wake-up interrupt on transfer events.
12. LPTIM is functional and autonomous with DMA in Stop mode, and can generate a wake-up interrupt on all events.
13. MDF and ADF are functional and autonomous with DMA in Stop mode, and can generate a wake-up interrupt on events.
14. GPDMA and LPDMA are functional and autonomous in Stop mode, and can generate a wake-up interrupt on events.
15. I/Os can be configured with internal pull-up, pull-down or floating in Shutdown mode but the configuration is lost when exiting the Shutdown mode.

By default, the microcontroller is in Run mode after a system or a power reset. It is up to the user to select one of the low-power modes described below:

- **Sleep** mode

  In Sleep mode, only the CPU is stopped. All peripherals continue to operate and can wake up the CPU when an interrupt/event occurs.

- **Stop 0, Stop 1, Stop 2 and Stop 3** modes

  Stop mode achieves the lowest power consumption while retaining the content of SRAM and registers. The SRAMs can be totally or partially switched off to further reduce consumption. All clocks in the V_{CORE} domain are stopped, the PLL, the MSI, the HSI16, the HSI48 and the HSE crystal oscillators are disabled. The LSE or LSI is still running.

  The RTC can remain active (Stop mode with RTC, Stop mode without RTC).

  Some peripherals are autonomous and can operate in Stop mode by requesting their kernel clock and their bus (APB or AHB) when needed, in order to transfer data with DMA (GPDMA1 in Stop 0 and Stop 1 modes, LPDMA1 in Stop 0, Stop 1 and Stop 2 modes). Refer to *Low-power background autonomous mode (LPBAM)* for more details. LPBAM is not supported in Stop 3 mode.

  In Stop 2 and Stop 3 modes, most of the V_{CORE} domain is put in a lower leakage mode. Stop 0 and Stop 1 modes offer the largest number of active peripherals and wake-up sources, a smaller wake-up time but a higher consumption than Stop 2 mode.

  In Stop 0 mode, the main regulator remains ON, allowing a very fast wake-up time but with much higher consumption.

  Stop 3 is the lowest power mode with full retention, but the functional peripherals and wake-up sources are reduced to the same ones than in Standby mode.

  The system clock when exiting from Stop 0, Stop 1 or Stop 2 mode can be either MSI up to 24 MHz or HSI16, depending on software configuration.

- **Standby** mode

  The Standby mode is used to achieve the lowest power consumption with BOR. The internal regulator is switched off so that the V_{CORE} domain is powered off. The PLL, the MSI, the HSI16, the HSI48 and the HSE crystal oscillators are also switched off.

  The RTC can remain active (Standby mode with RTC, Standby mode without RTC).

  The BOR always remains active in Standby mode.

  The state of each I/O during Standby mode can be selected by software: I/O with internal pull-up, internal pull-down or floating.

  After entering Standby mode, SRAMs and register contents are lost except for registers and backup SRAM in the Backup domain and Standby circuitry. Optionally, the full SRAM2 or 8 Kbytes or 56 Kbytes can be retained in Standby mode, supplied by the low-power regulator (Standby with SRAM2 retention mode).

  The BOR can be configured in ultra-low-power mode to further reduce power consumption during Standby mode.

  The device exits Standby mode when an external reset (NRST pin), an IWDG reset, WKUP pin event (configurable rising or falling edge), an RTC event occurs (alarm, periodic wake-up, timestamp), or a tamper detection. The tamper detection can be raised either due to external pins or due to an internal failure detection.

  The system clock after wake-up is MSI up to 4 MHz.

- **Shutdown** mode

  The lowest power consumption is achieved in Shutdown mode. The internal regulator is switched off so that the V_{CORE} domain is powered off. The PLL, the HSI16, the HSI48, the MSI, the LSI and the HSE oscillators are also switched off.

  The RTC can remain active (Shutdown mode with RTC, Shutdown mode without RTC). The BOR is not available in Shutdown mode. No power voltage monitoring is possible in this mode, therefore the switch to backup domain is not supported (V_{BAT} mode is not supported).

  SRAMs and register contents are lost except for registers in the backup domain as long as VDD is present.

  The device exits Shutdown mode when an external reset (NRST pin), a WKUP pin event (configurable rising or falling edge), or an RTC event occurs (alarm, periodic wake-up, timestamp), or a tamper detection.

  The system clock after wake-up is MSI at 4 MHz.

Low-power background autonomous mode (LPBAM)

The ultra-low-power STM32U5Gxxx devices support LPBAM (low-power background autonomous mode) that allows peripherals to be functional and autonomous in Stop mode (Stop 0, Stop 1 and Stop 2 modes), so without any software running.

In Stop 0 and Stop 1 modes, the autonomous peripherals are the following: ADC4, DAC1, LPTIMx (x = 1 to 4), USARTx (x = 1 to 6), LPUART1, SPIx (x = 1 to 3), I2Cx (x = 1 to 6), MDF1, ADF1, GPDMA1 and LPDMA1. In these modes, SRAM1, SRAM2, SRAM3, SRAM4 SRAM5, and SRAM6 can be accessed by the GPDMA1, and SRAM4 can be accessed by the LPDMA1.

In Stop 2 mode, the autonomous peripherals are the following: ADC4, DAC1, LPTIM1, LPTIM3, LPTIM4, LPUART1, SPI3, I2C3, ADF1 and LPDMA1. In this mode, the SRAM4 can be accessed by the LPDMA1.

Those peripherals support the features detailed below:

- Functionality in Stop mode thanks to its own independent clock (named kernel clock) request capability: the peripheral kernel clock is automatically switched on when requested by a peripheral, and automatically switched off when no peripheral requests it.
- DMA transfers supported in Stop mode thanks to system clock request capability: the system clock (MSI or HSI16) automatically switched on when requested by a peripheral, and automatically switched off when no peripheral requests it. When the system clock is requested by an autonomous peripheral, the system clock is woken up and distributed to all peripherals enabled in the RCC. This allows the DMA to access the enabled SRAM, and any enabled peripheral register (for instance GPIO or LPGPIO registers).
- Automatic start of the peripheral thanks to hardware synchronous or asynchronous triggers (such as I/Os edge detection and low-power timer event).
- Wake-up from Stop mode with peripheral interrupt.

The GPDMA and LPDMA are fully functional and the linked-list is updated in Stop mode, allowing the different DMA transfers to be linked without any CPU wake-up. This can be used to chain different peripherals transfers, or to write peripherals registers in order to change their configuration while remaining in Stop mode.

The DMA transfers from memory to memory can be started by hardware synchronous or asynchronous triggers, and the DMA transfers between peripherals and memories can also be gated by those triggers.

Here below some use-cases that can be done while remaining in Stop mode:

- A/D or D/A conversion triggered by a low-power timer (or any other trigger)
  - wake-up from Stop mode on analog watchdog if the A/D conversion result is out of programmed thresholds
  - wake-up from Stop mode on DMA buffer event
- Audio digital filter data transfer into SRAM
  - wake-up from Stop on sound-activity detection
- I^2C target reception or transmission, SPI reception, UART/LPUART reception
  - wake-up at the end of peripheral transfer or on DMA buffer event
- I^2C controller transfer, SPI transmission, UART/LPUART transmission, triggered by a low-power timer (or any other trigger):
  - example: sensor periodic read
  - wake-up at the end of peripheral transfer or on DMA buffer event
- Bridges between peripherals
  - example: ADC converted data transferred by communication peripherals
- Data transfer from/to GPIO/LPGPIO to/from SRAM for:
  - controlling external components
  - implementing data transmission and reception protocols

Table 10. Functionalities depending on the working mode(1)

Peripheral	Run	Sleep	Stop 0/1		Stop 2		Stop 3		Standby		Shutdown		VBAT
			-	Wake-up capability	-	Wake-up capability	-	Wake-up capability	-	Wake-up capability	-	Wake-up capability	
CPU	Y	-	-	-	-	-	-	-	-	-	-	-	-
Flash memory	O(2)	O(2)	-	-	-	-	-	-	-	-	-	-	-
SRAM1	Y(3)(4)	Y(3)(4)	O(7)	-	O(7)	-	O(7)	-	-	-	-	-	-
SRAM2	Y(3)(4)	Y(3)(4)	O(7)	O(5)	O(7)	-	O(7)	-	O (6)	-	-	-	-
SRAM3	Y(3)(4)	Y(3)(4)	O(7)	O(5)	O(7)	-	O(7)	-	-	-	-	-	-
SRAM4	Y(3)(4)	Y(3)(4)	O(7)	-	O(7)	-	O(7)	-	-	-	-	-	-
SRAM5	Y(3)(4)	Y(3)(4)	O(7)	-	O(7)	-	O(7)	-	-	-	-	-	-
SRAM6	Y(3)(4)	Y(3)(4)	O(7)	-	O(7)	-	O(7)	-	-	-	-	-	-
BKPSRAM	O(4)	O(4)	O	O(5)	O	-	O	-	O	-	-	-	O
FSMC	O	O	-	-	-	-	-	-	-	-	-	-	-
OCTOSPIx (x =1,2)	O	O	-	-	-	-	-	-	-	-	-	-	-
HSPI1	O	O	-	-	-	-	-	-	-	-	-	-	-
Backup registers	Y	Y	Y	-	Y	-	Y	-	Y	-	Y	-	Y
BOR (Brownout reset)	Y	Y	Y	Y	Y	Y	Y	Y	Y	Y	-	-	-
PVD (programmable voltage detector)	O	O	O	O	O	O	-	-	-	-	-	-	-
Peripheral voltage monitor	O	O	O	O	O	O	-	-	-	-	-	-	-
GPDMA1	O	O	O	O(8)	-	-	-	-	-	-	-	-	-
LPDMA1	O	O	O	O(9)	O	O(9)	-	-	-	-	-	-	-
DMA2D	O	O	-	-	-	-	-	-	-	-	-	-	-
HSI16 (high-speed internal)	O	O	(10)	-	(10)	-	-	-	-	-	-	-	-
HSI48 oscillator	O	O	-	-	-	-	-	-	-	-	-	-	-
HSE (high-speed external)	O	O	-	-	-	-	-	-	-	-	-	-	-
LSI (low-speed internal)	O	O	O	-	O	-	O	-	O	-	-	-	O
LSE (low-speed external)	O	O	O	-	O	-	O	-	O	-	O	-	O
MSIS and MSIK (multi-speed internal)	O	O	(10)	-	(10)	-	-	-	-	-	-	-	-
CSS (clock security system)	O	O	-	-	-	-	-	-	-	-	-	-	-

Table 10. Functionalities depending on the working mode[1] (continued)

Peripheral	Run	Sleep	Stop 0/1		Stop 2		Stop 3		Standby		Shutdown		VBAT
			-	Wake-up capability	-	Wake-up capability	-	Wake-up capability	-	Wake-up capability	-	Wake-up capability	
Clock security system on LSE	O	O	O	O	O	O	O	O	O	O	O	O	O
Backup domain voltage and temperature monitoring	O	O	O	O	O	O	O	O	O	O	O	O	O
RTC/TAMP	O	O	O	O	O	O	O	O	O	O	O	O	O
Number of RTC tamper pins	8	8	8	O	8	O	8	O	8	O	8	O	8
OTG_HS, UCPD	O[11]	O[11]	-	O[12]	-	-	-	-	-	-	-	-	-
USARTx (x=1,2,3,4,5,6)	O	O	O[13]	O[13]	-	-	-	-	-	-	-	-	-
Low-power UART (LPUART1)	O	O	O[13]	O[13]	O[13]	O[13]	-	-	-	-	-	-	-
I2Cx (x = 1,2,4,5,6)	O	O	O[14]	O[14]	-	-	-	-	-	-	-	-	-
I2C3	O	O	O[14]	O [14]	O[14]	O[14]	-	-	-	-	-	-	-
SPIx (x = 1,2)	O	O	O[15]	O[15]	-	-	-	-	-	-	-	-	-
SPI3	O	O	O[15]	O[15]	O[15]	O[15]	-	-	-	-	-	-	-
FDCAN1	O	O	-	-	-	-	-	-	-	-	-	-	-
SDMMCx (x = 1,2)	O	O	-	-	-	-	-	-	-	-	-	-	-
SAIx (x = 1,2)	O	O	-	-	-	-	-	-	-	-	-	-	-
ADCx (x = 1,2)	O	O	-	-	-	-	-	-	-	-	-	-	-
ADC4	O	O	O[16]	O[16]	O[16]	O[16]	-	-	-	-	-	-	-
DAC1 (2 converters)	O	O	O	-	O	-	-	-	-	-	-	-	-
VREFBUF	O	O	O	-	O	-	-	-	-	-	-	-	-
OPAMPx (x = 1,2)	O	O	O	-	O	-	-	-	-	-	-	-	-
COMPx (x = 1,2)	O	O	O	O	O	O	-	-	-	-	-	-	-
Temperature sensor	O	O	O	-	O	-	-	-	-	-	-	-	-
Timers (TIMx)	O	O	-	-	-	-	-	-	-	-	-	-	-
LPTIMx (x = 1,3,4)	O	O	O[17]	O[17]	O[17]	O[17]	-	-	-	-	-	-	-
LPTIM2	O	O	O[17]	O[17]	-	-	-	-	-	-	-	-	-
IWDG (independent watchdog)	O	O	O	O	O	O	O	O	O	O	-	-	-

Table 10. Functionalities depending on the working mode[1] (continued)

Peripheral	Run	Sleep	Stop 0/1		Stop 2		Stop 3		Standby		Shutdown		VBAT
			-	Wake-up capability	-	Wake-up capability	-	Wake-up capability	-	Wake-up capability	-	Wake-up capability	
WWDG (window watchdog)	O	O	-	-	-	-	-	-	-	-	-	-	-
SysTick timer	O	O	-	-	-	-	-	-	-	-	-	-	-
MDF1 (multi-function digital filter)	O	O	O[18]	O[18]	-	-	-	-	-	-	-	-	-
ADF1 (audio digital filter)	O	O	O[18]	O[18]	O[18]	O[18]	-	-	-	-	-	-	-
LTDC	O	O	-	-	-	-	-	-	-	-	-	-	-
DSI	O	O	-	-	-	-	-	-	-	-	-	-	-
GFXMMU	O	O	-	-	-	-	-	-	-	-	-	-	-
GPU2D	O	O	-	-	-	-	-	-	-	-	-	-	-
JPEG	O	O	-	-	-	-	-	-	-	-	-	-	-
GFXTIM	O	O	-	-	-	-	-	-	-	-	-	-	-
DCMI (digital camera interface)	O	O	-	-	-	-	-	-	-	-	-	-	-
PSSI (parallel synchronous slave interface)	O	O	-	-	-	-	-	-	-	-	-	-	-
CORDIC coprocessor	O	O	-	-	-	-	-	-	-	-	-	-	-
FMAC (filter mathematical accelerator)	O	O	-	-	-	-	-	-	-	-	-	-	-
TSC (touch sensing controller)	O	O	-	-	-	-	-	-	-	-	-	-	-
RNG (true random number generator)	O	O	-	-	-	-	-	-	-	-	-	-	-
AES and secure AES	O	O	-	-	-	-	-	-	-	-	-	-	-
PKA (public key accelerator)	O	O	-	-	-	-	-	-	-	-	-	-	-
OTFDEC (on-the-fly decryption)	O	O	-	-	-	-	-	-	-	-	-	-	-
HASH accelerator	O	O	-	-	-	-	-	-	-	-	-	-	-
CRC calculation unit	O	O	-	-	-	-	-	-	-	-	-	-	-
GPIOs	O	O	O	O	O	O	-[19]	24 pins	-[19]	24 pins	-[20]	24 pins	-

1. Y = yes (enabled). O = optional (disabled by default, can be enabled by software). - = not available. Gray cells highlight the wake-up capability in each mode.
2. The flash memory can be configured in power-down mode. By default, it is not in power-down mode.

3. The SRAMs can be powered on or off independently.
4. The SRAM clock can be gated on or off independently.
5. ECC error interrupt or NMI wake-up from Stop mode.
6. 8-Kbyte, 56-Kbyte or full SRAM2 content can be preserved.
7. Sub-blocks or full SRAM1, SRAM3, SRAM5, and SRAM6, full SRAM2 and SRAM4 can be powered-off to save power consumption. SRAM1, SRAM2, SRAM3, SRAM4, SRAM5, and SRAM6 can be accessed by GPDMA1 in Stop 0 and Stop 1 modes. SRAM4 can be accessed by LPDMA1 in Stop 0, Stop 1 and Stop 2 modes.
8. GPDMA transfers are functional and autonomous in Stop mode, and generates a wake-up interrupt on transfer events.
9. LPDMA transfers are functional and autonomous in Stop mode, and generates a wake-up interrupt on transfer events.
10. Some peripherals with autonomous mode and wake-up from Stop capability can request HSI16, MSIS or MSIK to be enabled. In this case, the oscillator is woken up by the peripheral, and is automatically put off when no peripheral needs it.
11. OTG_HS is functional in voltage scaling range 1 and 2.
12. OTG_HS cannot wake up from Stop mode 1.
13. USART and LPUART reception and transmission are functional and autonomous in Stop mode in asynchronous and in SPI master modes, and generate a wake-up interrupt on transfer events.
14. I2C reception and transmission are functional and autonomous in Stop mode, and generate a wake-up interrupt on transfer events.
15. SPI reception and transmission are functional and autonomous in Stop mode, and generate a wake-up interrupt on transfer events.
16. A/D conversion is functional and autonomous in Stop mode, and generates a wake-up interrupt on conversion events.
17. LPTIM is functional and autonomous in Stop mode, and generates a wake-up interrupt on events.
18. MDF and ADF are functional and autonomous in Stop mode, and generate a wake-up interrupt on events.
19. I/Os can be configured with internal pull-up, pull-down or floating in Stop 3 and Standby modes.
20. I/Os can be configured with internal pull-up, pull-down or floating in Shutdown mode but the configuration is lost when exiting the Shutdown mode.

3.9.4 Reset mode

In order to improve the consumption under reset, the I/O state under and after reset is “analog state” (the I/O Schmitt trigger is disabled). In addition, the internal reset pull-up is deactivated when the reset source is internal.

3.9.5 V_{BAT} operation

The VBAT pin allows the device V_{BAT} domain to be powered from an external battery or an external super-capacitor.

The VBAT pin supplies the RTC with LSE, anti-tamper detection (TAMP), backup registers and 2-Kbyte backup SRAM. Eight anti-tamper detection pins are available in V_{BAT} mode.

The V_{BAT} operation is automatically activated when V_{DD} is not present. An internal V_{BAT} battery charging circuit is embedded and can be activated when V_{DD} is present.

Note: When the microcontroller is supplied from V_{BAT}, neither external interrupts nor RTC/TAMP alarm/events exit the microcontroller from the V_{BAT} operation.

3.9.6 PWR TrustZone security

When the TrustZone security is activated by the TZEN option bit, the PWR is switched in TrustZone security mode.

The PWR TrustZone security secures the following configuration:

- low-power mode
- WKUP (wake-up) pins
- voltage detection and monitoring
- V_{BAT} mode

Some of the PWR configuration bits security is defined by the security of other peripherals:

- The VOS (voltage scaling) configuration is secure when the system clock selection is secure in RCC.
- The I/O pull-up/pull-down in Standby mode configuration is secure when the corresponding GPIO is secure.

3.10 Peripheral interconnect matrix

Several peripherals have direct connections between them, that allow autonomous communication between them and support the saving of CPU resources (thus power supply consumption). In addition, these hardware connections allow fast and predictable latency.

Depending on the peripherals, these interconnections can operate in Run, Sleep, Stop 0, Stop 1, and Stop 2 modes.

3.11 Reset and clock controller (RCC)

The RCC (reset and clock control) manages the different reset types, and generates all clocks for the bus and peripherals.

The RCC distributes the clocks coming from the different oscillators to the core and to the peripherals. It also manages the clock gating for low-power modes and ensures the clock robustness. It features:

- Clock prescaler: in order to get the best trade-off between speed and current consumption, the clock frequency to the CPU and peripherals can be adjusted by a programmable prescaler.
- Clock security system: clock sources can be changed safely on-the-fly in Run mode through a configuration register.
- Clock management: in order to reduce the power consumption, the clock controller can stop the clock to the core, individual peripherals or memory.
- System clock source: four different clock sources can be used to drive the master clock SYSCLK:
  - HSE (4 to 50 MHz high-speed external crystal or ceramic resonator) that can supply a PLL. The HSE can also be configured in bypass mode for an external clock.
  - HSI16 (16 MHz high-speed internal RC oscillator) trimmable by software, that can supply a PLL.
  - MSI (multispeed internal RC oscillator) trimmable by software, that can generate 16 frequencies from 100 kHz to 48 MHz. When a 32.768 kHz clock source is available in the system (LSE), the MSI frequency can be automatically trimmed by hardware to reach better than ±0.25% accuracy. In this mode the MSI can feed the USB device, saving the need of an external high-speed crystal (HSE). The MSI can supply a PLL.

  - System PLL that can be fed by HSE, HSI16 or MSI, with a maximum frequency at 160 MHz.
- HSI48 (RC48 with clock recovery system) internal 48 MHz clock source that can be used to drive the USB, the SDMMC or the RNG peripherals. This clock can be output on the MCO.
- UCPD kernel clock, derived from HSI16 clock. The HSI16 RC oscillator must be enabled prior to the UCPD kernel clock use.
- Auxiliary clock source: two ultra-low-power clock sources that can be used to drive the real-time clock:
  - LSE (32.768 kHz low-speed external crystal), supporting three drive capability modes. The LSE can also be configured in bypass mode for an external clock.
  - LSI (32 kHz low-speed internal RC), also used to drive the independent watchdog. The LSI clock accuracy is ±5% accuracy. The LSI clock can be divided by 128 to output a 250 Hz as source clock.
- Peripheral clock sources: several peripherals have their own independent clock whatever the system clock. Three PLLs, each having three independent outputs allowing the highest flexibility, can generate independent clocks for the ADC, USB, SDMMC, RNG, MDF, ADF, FDCAN1, OCTOSPIs, HSPI, LTDC, DSI and SAIs.
- Startup clock: after reset, the microcontroller restarts by default with MSI. The prescaler ratio and clock source can be changed by the application program as soon as the code execution starts.
- CSS (clock security system): this feature can be enabled by software. If a HSE clock failure occurs, the master clock automatically switches to HSI16 and a software interrupt is generated if enabled. LSE failure can also be detected and generates an interrupt.
- Clock-out capability:
  - MCO (microcontroller clock output): it outputs one of the internal clocks for external use by the application.
  - LSCO (low-speed clock output): it outputs LSI or LSE in all low-power modes (except V_{BAT} mode).

Several prescalers allow AHB and APB frequencies configuration. The maximum frequency of the AHB and the APB clock domains is 160 MHz.

Figure 4. Clock tree

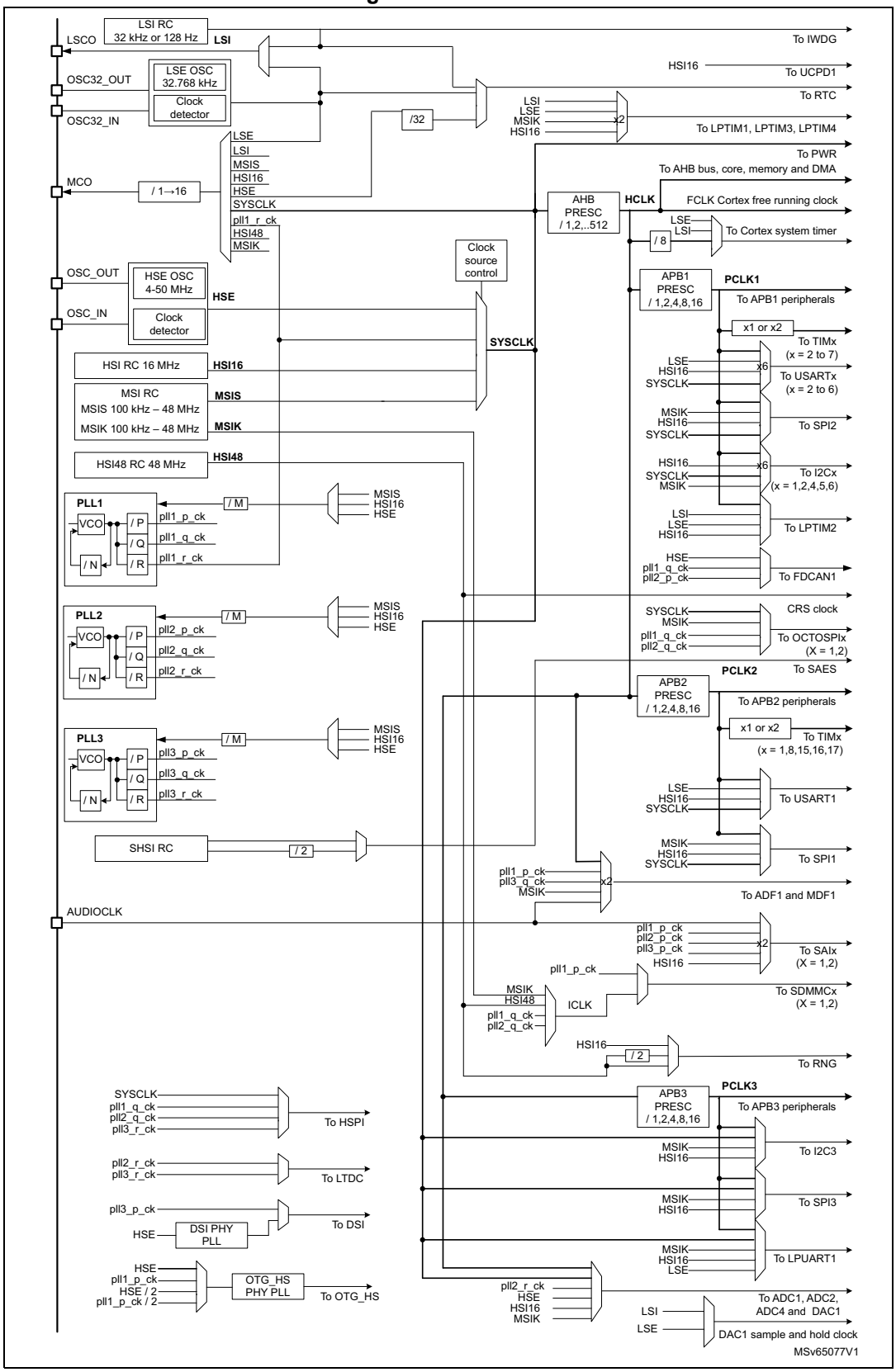

3.11.1 RCC TrustZone security

When the TrustZone security is activated by the TZEN option bit, the RCC is switched in TrustZone security mode.

The RCC TrustZone security secures some RCC system configuration and peripheral configuration clock from being read or modified by nonsecure accesses: when a peripheral is secure, the related peripheral clock, reset, clock source selection and clock enable during low-power modes control bits are secure.

A peripheral is in secure state:

- when its corresponding SEC security bit is set in the TZSC (TrustZone security controller), for securable peripherals.
- when a security feature of this peripheral is enabled through its dedicated bits, for TrustZone-aware peripherals.

3.12 Clock recovery system (CRS)

The devices embed a special block that allows automatic trimming of the internal 48 MHz oscillator to guarantee its optimal accuracy over the whole device operational range. This automatic trimming is based on the external synchronization signal, that is either derived from LSE oscillator, from an external signal on CRS_SYNC pin or generated by user software. For faster lock-in during startup, automatic trimming and manual trimming action can be combined.

3.13 General-purpose inputs/outputs (GPIOs)

Each of the GPIO pins can be configured by software as output (push-pull or open-drain), as input (with or without pull-up or pull-down) or as peripheral alternate function. Most of the GPIO pins are shared with digital or analog alternate functions.

After reset, all GPIOs are in analog mode to reduce power consumption.

The I/Os alternate function configuration can be locked if needed following a specific sequence in order to avoid spurious writing to the I/Os registers.

3.13.1 GPIOs TrustZone security

Each I/O pin of GPIO port can be individually configured as secure. When the selected I/O pin is configured as secure, its corresponding configuration bits for alternate function, mode selection, I/O data are secure against a nonsecure access. The associated registers bit access is restricted to a secure software only. After reset, all GPIO ports are secure.

3.14 Low-power general-purpose inputs/outputs (LPGPIO)

The LPGPIO allows dynamic I/O control in Stop 2 mode thanks to LPDMA1. Up to 16 I/Os can be configured and controlled as input or output (open-drain or push-pull depending on GPIO configuration).

LPGPIO TrustZone security

Each I/O pin registers bit of the LPGPIO is configured as secure if the corresponding I/O is configured as secure in the GPIO.

3.15 Multi-AHB bus matrix

A 32-bit multi-AHB bus matrix interconnects all the master (CPU, DMA2D, GFXMMU, GPDMA1, GPU2D, LTDC, OTG_HS, SDMMC1, SDMMC2) and the slave (flash memory, FMC, HSPI, OCTOSPIs, SRAMs, AHB and APB) peripherals. It also ensures a seamless and efficient operation even when several high-speed peripherals work simultaneously.

Another multi-AHB bus matrix interconnects two masters (previous AHB bus matrix slave port and LPDMA1) and all slaves that are functional in Stop 2 modes (SRAM4 and AHB/APB peripherals functional in Stop 2 mode).

3.16 System configuration controller (SYSCFG)

The STM32U5Gxxx devices feature a set of configuration registers. The main purposes of the system configuration controller are the following:

- Managing robustness feature
- Configuring FPU interrupts
- Enabling/disabling the FMP high-drive mode of some I/Os and voltage booster for I/Os analog switches
- Managing the I/O compensation cell
- Configuring register security access
- Configuring the USB HS PHY
- Adjust the HSPI supply capacitance

3.17 General purpose direct memory access controller (GPDMA)

The general purpose direct memory access (GPDMA) controller is a bus master and system peripheral.

The GPDMA is used to perform programmable data transfers between memory-mapped peripherals and/or memories via linked-lists, upon the control of an off-loaded CPU.

The GPDMA main features are:

- Dual bidirectional AHB master
- Memory-mapped data transfers from a source to a destination:
  - Peripheral-to-memory
  - Memory-to-peripheral
  - Memory-to-memory
  - Peripheral-to-peripheral
- Autonomous data transfers during Sleep and Stop modes

- Transfers arbitration based on a four-grade programmed priority at a channel level:
  - One high-priority traffic class, for time-sensitive channels (queue 3)
  - Three low-priority traffic classes, with a weighted round-robin allocation for non time-sensitive channels (queues 0, 1, 2)
- Per channel event generation, on any of the following events: transfer complete or half transfer complete or data transfer error or user setting error, and/or update linked-list item error or completed suspension
- Per channel interrupt generation, with separately programmed interrupt enable per event
- 16 concurrent DMA channels:
  - Per channel FIFO for queuing source and destination transfers
  - Intra-channel DMA transfers chaining via programmable linked-list into memory, supporting two execution modes: run-to-completion and link step mode
  - Intra-channel and inter-channel DMA transfers chaining via programmable DMA input triggers connection to DMA task completion events
- Per linked-list item within a channel:
  - Separately programmed source and destination transfers
  - Programmable data handling between source and destination: byte-based reordering, packing or unpacking, padding or truncation, sign extension and left/right realignment
  - Programmable number of data bytes to be transferred from the source, defining the block level
  - 12 channels with linear source and destination addressing: either fixed or contiguously incremented addressing, programmed at a block level, between successive single transfers
  - Four channels with 2D source and destination addressing: programmable signed address offsets between successive burst transfers (non-contiguous addressing within a block, combined with programmable signed address offsets between successive blocks, at a second 2D/repeated block level)
  - Support for scatter-gather (multi-buffer transfers), data interleaving and deinterleaving via 2D addressing
  - Programmable DMA request and trigger selection
  - Programmable DMA half-transfer and transfer complete events generation
  - Pointer to the next linked-list item and its data structure in memory, with automatic update of the DMA linked-list control registers
- Debug:
  - Channel suspend and resume support
  - Channel status reporting including FIFO level and event flags
- TrustZone support:
  - Support for secure and nonsecure DMA transfers, independently at a first channel level, and independently at a source/destination and link sub-levels
  - Secure and nonsecure interrupts reporting, resulting from any of the respectively secure and nonsecure channels
  - TrustZone-aware AHB slave port, protecting any DMA secure resource (register, register field) from a nonsecure access

- Privileged/unprivileged support:
  - Support for privileged and unprivileged DMA transfers, independently at channel level
  - Privileged-aware AHB slave port.

Table 11. GPDMA1 channels implementation and usage

Channel x	Hardware parameters		Features
	dma_fifo_ size[x]	dma_ addressing[x]	
x = 0 to 11	2	0	Channel x (x = 0 to 11) is implemented with: – a FIFO of 8 bytes, 2 words – fixed/contiguously incremented addressing These channels may be also used for GPDMA transfers, between an APB or AHB peripheral and SRAM.
x = 12 to 15	4	1	Channel x (x = 12 to 15) is implemented with: – a FIFO of 32 bytes, 8 words – 2D addressing These channels may be also used for GPDMA transfers, between a demanding AHB peripheral and SRAM, or for transfers from/to external memories.

Table 12. GPDMA1 autonomous mode and wake-up in low-power modes

Feature	Low-power modes
Autonomous mode and wake-up	GPDMA1 in Sleep, Stop 0, and Stop 1 modes

3.18 Low-power direct memory access controller (LPDMA)

The LPDMA controller is a bus master and system peripheral. The LPDMA is used to perform programmable data transfers between memory-mapped peripherals and/or memories via linked-lists, upon the control of an off-loaded CPU.

The LPDMA main features are:

- Single bidirectional AHB master
- Memory-mapped data transfers from a source to a destination:
  - Peripheral-to-memory
  - Memory-to-peripheral
  - Memory-to-memory
  - Peripheral-to-peripheral
- Autonomous data transfers during Sleep and Stop modes
- Transfers arbitration based on a 4-grade programmed priority at channel level:
  - One high-priority traffic class, for time-sensitive channels (queue 3)
  - Three low-priority traffic classes, with a weighted round-robin allocation for non time-sensitive channels (queues 0, 1, 2)

- Per channel event generation, on any of the following events: transfer complete, or half-transfer complete, or data transfer error, or user setting error, and/or update linked-list item error, or completed suspension
- Per channel interrupt generation, with separately programmed interrupt enable per event
- Four concurrent DMA channels:
  - Intra-channel DMA transfers chaining via programmable linked-list into memory, supporting two execution modes: run-to-completion and link step mode
  - Intra-channel and inter-channel DMA transfers chaining via programmable DMA input triggers connection to DMA task completion events
- Per linked-list item within a channel:
  - Separately programmed source and destination transfers
  - Programmable data handling between source and destination: byte-based padding or truncation, sign extension and left/right realignment
  - Programmable number of data bytes to be transferred from the source, defining the block level
  - Linear source and destination addressing: either fixed or contiguously incremented addressing, programmed at a block level, between successive single transfers
  - Programmable DMA request and trigger selection
  - Programmable DMA half-transfer and transfer complete events generation
  - Pointer to the next linked-list item and its data structure in memory, with automatic update of the DMA linked-list control registers
- Debug:
  - Channel suspend and resume support
  - Channel status reporting and event flags
- TrustZone support
  - Support for secure and nonsecure DMA transfers, independently at a first channel level, and independently at a source/destination and link sub-levels
  - Secure and nonsecure interrupts reporting, resulting from any of the respectively secure and nonsecure channels
  - TrustZone-aware AHB slave port, protecting any DMA secure resource (register, register field) from a nonsecure access
- Privileged/unprivileged support:
  - Support for privileged and unprivileged DMA transfers, independently at channel level
  - Privileged-aware AHB slave port.

Table 13.LPDMA1 channels implementation and usage

Channel x	Hardware parameters		Features
	dma_fifo_ size[x]	dma_ addressing[x]	
x = 0 to 3	0	0	Channel x (x = 0 to 3) is implemented with: – no FIFO. Only a single source transfer cell is internally registered. – fixed/contiguously incremented addressing

Table 14. LPDMA1 autonomous mode and wake-up in low-power modes

Feature	Low-power modes
Autonomous mode and wake-up	LPDMA1 in Sleep, Stop 0, Stop 1, and Stop 2 modes

3.19 Neo-Chrom graphic processor (GPU2D)

The GPU2D is a dedicated graphics processing unit accelerating numerous 2.5D graphics applications such as graphical user interface (GUI), menu display or animations. It works together with an optimized software stack designed for state of the art graphic rendering.

The GPU2D main features are:

- Multi-threaded fragment (pixel) processing core with a VLIW (very-long instruction word) instruction set
- Fixed point functional units
- Command list based DMAs to minimize CPU overhead
- Two 32-bit AHB master interfaces for texture, command list and framebuffer access
- 32-bit AHB slave interface for register bank access
- Up to 4 general-purpose flags for system-level synchronization
- Texture decompression unit with TSC™4 and TSC™6/TSC™6a support

The GPU2D also features:

- 2D drawing
  - Pixel/line drawing
  - Filled rectangles
  - Triangles, quadrilateral drawing
  - Anti-aliasing 8xMSAA (multi-sample anti-aliasing)
- Vector graphic acceleration
  - Path drawing (lines, polygons, rectangles, arcs, ellipses, circles)
  - Bezier curves (cubic and quadratic)
  - Path transformation (3x3 matrix)
  - Path stroking
  - Filling (event-odd and non-zero with 8x MSAA anti-aliasing)
  - Gradient generation (linear, radial, conic)
- Image transformations
  - 3D perspective correct projections
  - Texture mapping with bilinear filtering or point sampling
- Blit support
  - Rotation, mirroring, stretching (independently on x and y axis)
  - Source and/or destination color keying
  - Pixel format conversions
- Text rendering support
  - A1, A2, A4 and A8 bitmap anti-aliased
  - Subsampled anti-aliased
- Color formats

  - RGB, grayscale
  - 32, 24, 16 and 8 bits with/without alpha
- Full alpha blending with hardware blender
  - Programmable blending modes
  - Source/destination color keying

3.20 Chrom-ART Accelerator controller (DMA2D)

The Chrom-Art Accelerator (DMA2D) is a specialized DMA dedicated to image manipulation. It can perform the following operations:

- Filling a part or the whole of a destination image with a specific color
- Copying a part or the whole of a source image into a part or the whole of a destination image
- Copying a part or the whole of a source image into a part or the whole of a destination image with a pixel format conversion
- Blending a part and/or two complete source images with different pixel format and copy the result into a part or the whole of a destination image with a different color format

All the classical color coding schemes are supported from 4-bit up to 32-bit per pixel with indexed or direct color mode, including block based YCbCr to handle JPEG decoder output. The DMA2D has its own dedicated memories for CLUTs (color look-up tables).

The main DMA2D features are:

- Single AHB master bus architecture
- AHB slave programming interface supporting 8-, 16-, 32-bit accesses (except for CLUT accesses which are 32-bit)
- User-programmable working area size
- User-programmable offset for sources and destination areas expressed in pixels or bytes
- User-programmable sources and destination addresses on the whole memory space
- Up to two sources with blending operation
- Alpha value that can be modified (source value, fixed value, or modulated value)
- User programmable source and destination color format
- Up to 12 color formats supported from 4-bit up to 32-bit per pixel with indirect or direct color coding
- Block based (8x8) YCbCr support with 4:4:4, 4:2:2 and 4:2:0 chroma sub-sampling factors
- 2 internal memories for CLUT storage in indirect color mode
- Automatic CLUT loading or CLUT programming via the CPU
- User programmable CLUT size
- Internal timer to control AXI bandwidth
- 6 operating modes: register-to-memory, memory-to-memory, memory-to-memory with pixel format conversion, memory-to-memory with pixel format conversion and blending, memory-to memory with pixel format conversion, blending and fixed color foreground, and memory-to memory with pixel format conversion, blending and fixed color background.

- Area filling with a fixed color
- Copy from an area to another
- Copy with pixel format conversion between source and destination images
- Copy from two sources with independent color format and blending
- Output buffer byte swapping to support refresh of displays through parallel interface
- Abort and suspend of DMA2D operations
- Watermark interrupt on a user programmable destination line
- Interrupt generation on bus error or access conflict
- Interrupt generation on process completion

3.21 Chrom-GRC (GFXMMU)

The GFXMMU is a graphical oriented memory management unit aimed to:

- Optimize memory usage according to the display shape
- Cache linear accesses to the frame buffer
- Prefetch data

The GFXMMU main features are:

- Fully programmable display shape to physically store only the visible pixel
- Up to 4 virtual buffers
- Each virtual buffer have 3072 or 4096 bytes per line and 1024 lines
- Each virtual buffer can be physically mapped to any system memory
- Optional cache for linear accesses
- Cache can be locked to a virtual buffer
- Cache prefetch mechanism for linear accesses anticipation
- Interrupt in case of buffer overflow (1 per buffer)
- Interrupt in case of memory transfer error

3.22 JPEG codec (JPEG)

The hardware 8-bit JPEG codec encodes uncompressed image data stream or decodes JPEG-compressed image data stream. It also fully manages JPEG headers.

The JPEG main features are:

- High-speed fully-synchronous operation
- Configurable as encoder or decoder
- Single-clock-per-pixel encode/decode
- RGB, YCbCr, YCMK and BW (grayscale) image color space support
- 8-bit depth per image component at encode/decode
- JPEG header generator/parser with enable/disable
- Four programmable quantization tables
- Single-clock Huffman coding and decoding
- Fully-programmable Huffman tables (two AC and two DC)
- Fully-programmable minimum coded unit (MCU)

- Concurrent input and output data stream interfaces

3.23 Graphic timer (GFXTIM)

The graphic timer (GFXTIM) is a graphic oriented timer allowing smart management of graphical events for frame or line counting.

The GFXTIM main features are:

- Integrated frame and line clock generation
- One absolute frame counter with one compare channel
- Two auto-reload relative frame counters
- One line timer with two compare channels
- External tearing-effect line management and synchronization
- Four programmable event generators with external trigger generation
- One watchdog counter

3.24 Interrupts and events

3.24.1 Nested vectored interrupt controller (NVIC)

The devices embed a NVIC that is able to manage 16 priority levels and to handle up to 138 maskable interrupt channels plus the 16 interrupt lines of the Cortex-M33.

The NVIC benefits are the following:

- closely coupled NVIC giving low-latency interrupt processing
- interrupt entry vector table address passed directly to the core
- early processing of interrupts
- processing of late arriving higher priority interrupts
- support for tail chaining
- processor state automatically saved
- interrupt entry restored on interrupt exit with no instruction overhead
- TrustZone support: NVIC registers banked across secure and nonsecure states

The NVIC hardware block provides flexible interrupt management features with minimal interrupt latency.

3.24.2 Extended interrupt/event controller (EXTI)

The EXTI manages the individual CPU and system wake-up through configurable event inputs. It provides wake-up requests to the power control, and generates an interrupt request to the CPU NVIC and events to the CPU event input. For the CPU an additional event generation block (EVG) is needed to generate the CPU event signal.

The EXTI wake-up requests allow the system to be woken up from Stop modes.

The interrupt request and event request generation can also be used in Run modes. The EXTI also includes the EXTI multiplexer I/O port selection.

The EXTI main features are the following:

- All event inputs allowed to wake up the system
- Configurable events (signals from I/Os or peripherals able to generate a pulse)
  - Selectable active trigger edge
  - Interrupt pending status register bit independent for the rising and falling edge
  - Individual interrupt and event generation mask, used for conditioning the CPU wake-up, interrupt and event generation
  - Software trigger possibility
- TrustZone secure events
  - The access to control and configuration bits of secure input events can be made secure
- EXTI I/O port selection

3.25 Cyclic redundancy check calculation unit (CRC)

The CRC is used to get a CRC code using a configurable generator with polynomial value and size.

Among other applications, the CRC-based techniques are used to verify data transmission or storage integrity. In the scope of the EN/IEC 60335-1 standard, they offer a mean to verify the flash memory integrity.

The CRC calculation unit helps to compute a signature of the software during runtime, that can be ulteriorly compared with a reference signature generated at link-time and that can be stored at a given memory location.

3.26 CORDIC coprocessor (CORDIC)

The CORDIC coprocessor provides hardware acceleration of certain mathematical functions, notably trigonometric, commonly used in motor control, metering, signal processing and many other applications. It speeds up the calculation of these functions compared to a software implementation, allowing a lower operating frequency, or freeing up processor cycles in order to perform other tasks.

The CORDIC main features are:

- 24-bit CORDIC rotation engine
- Circular and hyperbolic modes
- Rotation and vectoring modes
- Functions: sine, cosine, sinh, cosh, atan, atan2, atanh, modulus, square root, natural logarithm
- Programmable precision
- Low-latency AHB slave interface
- Results can be read as soon as ready without polling or interrupt
- DMA read and write channels
- Multiple register read/write by DMA

3.27 Filter math accelerator (FMAC)

The FMAC performs arithmetic operations on vectors. It comprises a MAC (multiplier/accumulator) unit, together with address generation logic that allows it to index vector elements held in local memory.

The unit includes support for circular buffers on input and output, that allows digital filters to be implemented. Both finite and infinite impulse response filters can be done.

The unit allows frequent or lengthy filtering operations to be offloaded from the CPU, freeing up the processor for other tasks. In many cases it can accelerate such calculations compared to a software implementation, resulting in a speed-up of time critical tasks.

The FMAC main features are:

- 16 x 16-bit multiplier
- 24 + 2-bit accumulator with addition and subtraction
- 16-bit input and output data
- 256 x 16-bit local memory
- Up to three areas can be defined in memory for data buffers (two input, one output), defined by programmable base address pointers and associated size registers
- Input and output buffers can be circular
- Filter functions: FIR, IIR (direct form 1)
- Vector functions: dot product, convolution, correlation
- AHB slave interface
- DMA read and write data channels

3.28 Flexible static memory controller (FSMC)

The FSMC includes two memory controllers:

- NOR/PSRAM memory controller
- NAND/memory controller

The FSMC is also named flexible memory controller (FMC).

The main features of the FSMC are the following:

- Interface with static-memory mapped devices including:
  - Static random access memory (SRAM)
  - NOR flash memory/OneNAND flash memory
  - PSRAM (four memory banks)
  - NAND flash memory with ECC hardware to check up to 8 Kbytes of data
  - Ferroelectric RAM (FRAM)
- 8-, 16- bit data bus width
- Independent chip select control for each memory bank
- Independent configuration for each memory bank
- Write FIFO

3.28.1 LCD parallel interface

The FSMC can be configured to interface seamlessly with most graphic LCD controllers. It supports the Intel® 8080 and Motorola® 6800 modes, and is flexible enough to adapt to specific LCD interfaces.

This LCD parallel interface capability makes it easy to build cost effective graphic applications using LCD modules with embedded controllers or high-performance solutions using external controllers with dedicated acceleration.

3.28.2 FSMC TrustZone security

When the TrustZone security is enabled, the whole FSMC banks are secure after reset. Nonsecure area can be configured using the TZSC MPCWMx controller:

- FSMC NOR/PSRAM bank:
  - Up to two nonsecure area can be configured thought the TZSC MPCWM2 controller with a 64-Kbyte granularity
- FSMC NAND bank:
  - Can be either configured as fully secure or fully nonsecure using the TZSC MPCWM3 controller

The FSMC registers can be configured as secure through the TZSC controller.

3.29 Octo-SPI interface (OCTOSPI)

The OCTOSPI supports most external serial memories such as serial PSRAMs, serial NAND and serial NOR flash memories, HyperRAMs™ and HyperFlash™ memories, with the following functional modes:

- indirect mode: all the operations are performed using the OCTOSPI registers.
- automatic status-polling mode: the external memory status register is periodically read and an interrupt can be generated in case of flag setting.
- memory-mapped mode: the external memory is memory mapped and is seen by the system as if it were an internal memory supporting read and write operation.

The OCTOSPI supports the following protocols with associated frame formats:

- the standard frame format with the command, address, alternate byte, dummy cycles and data phase
- the HyperBus™ frame format

The OCTOSPI offers the following features:

- Three functional modes: indirect, automatic status-polling, and memory-mapped
- Read and write support in memory-mapped mode
- Supports for single, dual, quad and octal communication
- Dual-quad mode, where eight bits can be sent/received simultaneously by accessing two quad memories in parallel.
- SDR (single-data rate) and DTR (double-transfer rate) support
- Data strobe support
- Fully programmable opcode
- Fully programmable frame format

- HyperBus support
- Integrated FIFO for reception and transmission
- 8-, 16-, and 32-bit data accesses allowed
- DMA channel for indirect mode operations
- Interrupt generation on FIFO threshold, timeout, operation complete, and access error

3.29.1 OCTOSPI TrustZone security

When the TrustZone security is enabled, the whole OCTOSPI bank is secure after reset.

Up to two nonsecure area can be configured thought the TZSC MPCWM1 and MPCWM5 controllers with a granularity of 64 Kbytes.

The OCTOSPI registers can be configured as secure through the TZSC controller.

3.30 OCTOSPI I/O manager (OCTOSPIM)

The OCTOSPI I/O manager is a low-level interface enabling:

- efficient OCTOSPI pin assignment with a full I/O matrix (before alternate function map)
- multiplex of Single-, Dual-, Quad-, Octal-SPI interfaces over the same bus and hence support memories embedded in a multichip package

The OCTOSPIM main features are:

- Supports up to two Single-, Dual-, Quad-, Octal-SPI interfaces
- Supports up to two ports for pin assignment
- Fully programmable I/O matrix for pin assignment by function (data/control/clock)

3.31 Delay block (DLYB)

The delay block (DLYB) is used to generate an output clock that is dephased from the input clock. The phase of the output clock must be programmed by the user application. The output clock is then used to clock the data received by another peripheral such as a SDMMC or Octo-SPI interface. The delay is voltage and temperature dependent, that may require the application to re-configure and recenter the output clock phase with the received data.

The delay block main features are:

- Input clock frequency ranging from 25 to 160 MHz
- Up to 12 oversampling phases

3.32 Hexadeca-SPI interface (HSPI)

The HSPI supports most external serial memories such as serial PSRAMs, serial NAND and serial NOR flash memories, HyperRAMs and HyperFlash memories, with the following functional modes:

- indirect mode: all the operations are performed using the HSPI registers.
- automatic status polling mode: the external memory status register is periodically read and an interrupt can be generated in case of flag setting.

- memory-mapped mode: the external memory is memory mapped and is seen by the system as if it were an internal memory supporting read and write operation.

The HSPI supports the following protocols with associated frame formats:

- the standard frame format with the command, address, alternate byte, dummy cycles and data phase
- the HyperBus frame format

The HSPI offers the following features:

- Three functional modes: indirect, automatic status-polling, and memory-mapped
- Read and write support in Memory-mapped mode
- Support for single, dual, quad, octal and hexadeca communication
- Dual-quad mode, where eight bits can be sent/received simultaneously by accessing two quad or two octal memories in parallel
- SDR (single-data rate) and DTR (double-transfer rate) support
- Data strobe support
- Fully programmable opcode
- Fully programmable frame format
- Support wrapped-type access to memory in read direction
- HyperBus support
- Integrated FIFO for reception and transmission
- 8-, 16-, and 32-bit data accesses allowed
- DMA channel for indirect mode operations
- Interrupt generation on FIFO threshold, timeout, operation complete, and access error
- High-speed interface up to 160 MHz

3.32.1 HSPI TrustZone security

When the TrustZone security is enabled, the whole HSPI bank is secure after reset.

Up to two nonsecure areas can be configured thought the TZSC MPCWM6 controller with a granularity of 64 Kbytes.

The HSPI registers can be configured as secure through the TZSC controller.

3.33 Analog-to-digital converters (ADC1, ADC2, and ADC4)

The devices embed three successive approximation analog-to-digital converters.

Table 15. ADC features

ADC modes/features(1)	ADC1	ADC2	ADC4
Resolution	14 bits		12 bits
Maximum sampling speed for maximum resolution	2.5 Msps		
Hardware offset calibration	X		
Hardware linearity calibration	X		-
Single-ended inputs	X		

Table 15. ADC features (continued)

ADC modes/features[1]	ADC1	ADC2	ADC4
Differential inputs	X		-
Injected channel conversion	X		-
Oversampling	up to x1024		up to x256
Data register	32 bits		16 bits
DMA support	X		
Parallel data output to MDF	X		-
Dual mode	X		-
Autonomous mode	-		X
Offset compensation	X		-
Gain compensation	X		-
Number of analog watchdogs	3		
Wake-up from Stop mode	-		X[2]

1. X = supported.
2. Wake-up supported from Stop 0, Stop 1 and Stop 2 modes.

3.33.1 Analog-to-digital converters (ADC1/2)

The ADC1/2 are 14-bit ADC successive approximation analog-to-digital converters.

Each ADC has up to 20 multiplexed channels. A/D conversion of the various channels can be performed in Single, Continuous, Scan or Discontinuous mode. The result of the ADC is stored in a left-aligned or right-aligned 32-bit data register.

The ADC1/2 are mapped on the AHB bus to allow fast data handling. The analog watchdog features allow the application to detect if the input voltage goes outside the user-defined high or low thresholds.

A built-in hardware over sampler allows analog performances to be improved while off-loading the related computational burden from the CPU.

An efficient low-power mode is implemented to allow very low consumption at low frequency.
The ADC1/2 main features are:

- High-performance features
  - Dual mode operation
  - 14-, 12-, 10- or 8-bit configurable resolution
  - A/D conversion time independent from the AHB bus clock frequency
  - Faster conversion time by lowering resolution
  - Management of single-ended or differential inputs (programmable per channels)
  - Fast data handling thanks to the AHB slave bus interface
  - Self-calibration (both offset and linearity)
  - Channel-wise programmable sampling time
  - Flexible sampling time control

  - Up to four injected channels (analog inputs assignment to regular or injected channels is fully configurable)
  - Fast context switching thanks to the hardware assistant that prepares the context of the injected channels
  - Data alignment with in-built data coherency
  - Data can be managed by GPDMA for regular channel conversions with FIFO
  - Data can be routed to MDF for post processing
  - Four dedicated data registers for the injected channels
- Oversampler
  - 32-bit data register
  - Oversampling ratio adjustable from 2 to 1024
  - Programmable data right and left shift
- Data preconditioning
  - Gain compensation
  - Offset compensation
- Low-power features
  - Speed adaptive low-power mode to reduce ADC consumption when operating at low frequency
  - Slow bus frequency application while keeping optimum ADC performance
  - Automatic control to avoid ADC overrun in low AHB bus clock frequency application (auto-delayed mode)
- ADC features an external analog input channel:
  - Up to 17 channels from dedicated GPIO pads
- Three additional internal dedicated channels:
  - One channel for internal reference voltage (V_{REFINT})
  - One channel for internal temperature sensor (V_{SENSE})
  - One channel for V_{BAT} monitoring channel ($V_{BAT}/4$)
- Start-of-conversion can be initiated:
  - by software for both regular and injected conversions
  - by hardware triggers with configurable polarity (internal timers events or GPIO input events) for both regular and injected conversions
- Conversion modes
  - Single mode: the ADC converts a single channel. The conversion is triggered by a special event.
  - Scan mode: the ADC scans and converts a sequence of channels.
  - Continuous mode: the ADC converts continuously selected inputs.
  - Discontinuous mode: the ADC converts a subset of the conversion sequence.
- Interrupt generation when the ADC is ready, at end of sampling, end of conversion (regular or injected), end of sequence conversion (regular or injected), analog watchdog 1, 2 or 3 or when an overrun event occurs
- Three analog watchdogs
  - Filtering to ignore out-of-range data
- ADC input range: $V_{SSA} < V_{IN} < V_{REF+}$

Note: The ADC1/2 analog block clock frequency must be between 5 MHz and 55 MHz.

3.33.2 Analog-to-digital converter 4 (ADC4)

The 12-bit ADC4 is a successive approximation analog-to-digital converter. It has up to 25 multiplexed channels allowing it to measure signals from 19 external and six internal sources. A/D conversion of the various channels can be performed in Single, Continuous, Scan or Discontinuous mode. The result of the ADC is stored in a left-aligned or right-aligned 16-bit data register.

The analog watchdog feature allows the application to detect if the input voltage goes outside the user-defined higher or lower thresholds.

An efficient low-power mode is implemented to allow very low consumption at low frequency. The ADC4 is autonomous in low-power modes down to Stop 2 mode.

A built-in hardware oversampler allows analog performances to be improved while off-loading the related computational burden from the CPU.

The ADC4 main features are:

- High performance
  - 12-, 10-, 8- or 6-bit configurable resolution
  - A/D conversion time: 0.4 µs for 12-bit resolution (2.5 MHz), faster conversion times obtained by lowering resolution
  - Self-calibration
  - Programmable sampling time
  - Data alignment with built-in data coherency
  - DMA support
- Low-power
  - HCLK frequency reduced for low-power operation while still keeping optimum ADC performance
  - Wait mode: ADC overrun prevented in applications with low frequency HCLK
  - Auto-off mode: ADC automatically powered off except during the active conversion phase, dramatically reducing the ADC power consumption
  - Autonomous mode: In low-power modes down to Stop 2 mode, the ADC4 is automatically switched on when a trigger occurs to start conversion, and it is automatically switched off after conversion. Data are transfered in SRAM with DMA.
  - ADC4 interrupts wake up the device from Stop 0, Stop 1 and Stop 2 modes.
- Analog input channels
  - Up to 19 external analog inputs
  - One channel for the internal temperature sensor (VSENSE)
  - One channel for the internal reference voltage (VREFINT)
  - One channel for the internal digital core voltage (VCORE)
  - One channel for monitoring the external VBAT power supply pin
  - Connection to two DAC internal channels
- Start-of-conversion can be initiated:
  - By software

  - By hardware triggers with configurable polarity (timer events or GPIO input events)
- Conversion modes
  - Conversion of a single channel or scan of a sequence of channels
  - Selected inputs converted once per trigger in Single mode
  - Selected inputs converted continuously in Continuous mode
  - Discontinuous mode
- Interrupt generation at the end of sampling, end of conversion, end of sequence conversion, and in case of analog watchdog or overrun events, with wake-up from Stop capability
- Analog watchdog
- Oversampler
  - 16-bit data register
  - Oversampling ratio adjustable from 2 to 256
  - Programmable data shift up to 8 bits
- ADC supply requirements: 1.62 to 3.6 V
- ADC input range: $V_{SSA} < V_{IN} < V_{REF+}$

Note: The ADC4 analog block clock frequency must be between 140 kHz and 55 MHz.

3.33.3 Temperature sensor

The temperature sensor generates a voltage V_{SENSE} that varies linearly with temperature. The temperature sensor is internally connected to ADC1, ADC2 and ADC4 input channel that is used to convert the sensor output voltage into a digital value.

The sensor provides good linearity but it must be calibrated to obtain a good accuracy of the temperature measurement. As the offset of the temperature sensor varies from chip to chip due to process variation, the uncalibrated internal temperature sensor is suitable for applications that detect temperature changes only.

To improve the accuracy of the temperature sensor measurement, each device is individually factory-calibrated by ST. The temperature sensor factory calibration data are stored by STMicroelectronics in the system memory area, accessible in read-only mode.

Table 16. Temperature sensor calibration values

Calibration value name	Description	Memory address
TS_CAL1	Temperature sensor 14-bit raw data acquired by ADC1 at 30 °C (± 5 °C), $V_{DDA} = V_{REF+}$ = 3.0 V (± 10 mV)	0x0BFA 0710 - 0x0BFA 0711
TS_CAL2	Temperature sensor 14-bit raw data acquired by ADC1 at 130 °C (± 5 °C), $V_{DDA} = V_{REF+}$ = 3.0 V (± 10 mV)	0x0BFA 0742 - 0x0BFA 0743

3.33.4 Internal voltage reference (V_{REFINT})

The VREFINT provides a stable (bandgap) voltage output for the ADC and the comparators. The VREFINT is internally connected to ADC1, ADC2 and ADC4 input channels.

The precise voltage of VREFINT is individually measured for each part by STMicroelectronics during production test and stored in the system memory area. It is accessible in read-only mode.

Table 17. Internal voltage reference calibration values

Calibration value name	Description	Memory address
VREFINT_CAL	14-bit raw data acquired by ADC1 at 30 °C (± 5 °C), $V_{DDA} = V_{REF+}$ = 3.0 V (± 10 mV)	0x0BFA 07A5 - 0x0BFA 07A6

3.33.5 V_{BAT} battery voltage monitoring

This embedded hardware enables the application to measure the V_{BAT} battery voltage using ADC1, ADC2 or ADC4 input channel. As the V_{BAT} voltage may be higher than the V_{DDA}, and thus outside the ADC input range, the VBAT pin is internally connected to a bridge divider by four. As a consequence, the converted digital value is a quarter of the V_{BAT} voltage.

3.34 Digital to analog converter (DAC)

The DAC module is a 12-bit, voltage output digital-to-analog converter. The DAC can be configured in 8- or 12-bit mode and may be used in conjunction with the DMA controller. In 12-bit mode, the data may be left- or right-aligned.

The DAC features two output channels, each with its own converter. In dual DAC channel mode, conversions can be done independently or simultaneously when both channels are grouped together for synchronous update operations. An input reference pin, VREF+ (shared with others analog peripherals) is available for better resolution. An internal reference can also be set on the same input.

The DAC_OUTx pin can be used as general purpose input/output (GPIO) when the DAC output is disconnected from output pad and connected to on chip peripheral. The DAC output buffer can be optionally enabled to allow a high drive output current. An individual calibration can be applied on each DAC output channel. The DAC output channels support a low-power mode, the sample and hold mode.

The digital interface supports the following features:

- One DAC interface, maximum two output channels
- Left or right data alignment in 12-bit mode
- Synchronized update capability
- Noise-wave and triangular-wave generation
- Sawtooth wave generation
- Dual DAC channel for independent or simultaneous conversions
- DMA capability for each channel including DMA underrun error detection
- Double data DMA capability to reduce the bus activity
- External triggers for conversion
- DAC output channel buffered/unbuffered modes
- Buffer offset calibration
- Each DAC output can be disconnected from the DAC_OUTx output pin

- DAC output connection to on chip peripherals
- Sample and hold mode for low-power operation in Stop mode. The DAC voltage can be changed autonomously with the DMA while the device is in Stop mode.
- Autonomous mode to reduce the power consumption for the system
- Voltage reference input

3.35 Voltage reference buffer (VREFBUF)

The devices embed a voltage reference buffer that can be used as voltage reference for ADCs, DACs and also as voltage reference for external components through the VREF+ pin.

Figure 5. VREFBUF block diagram

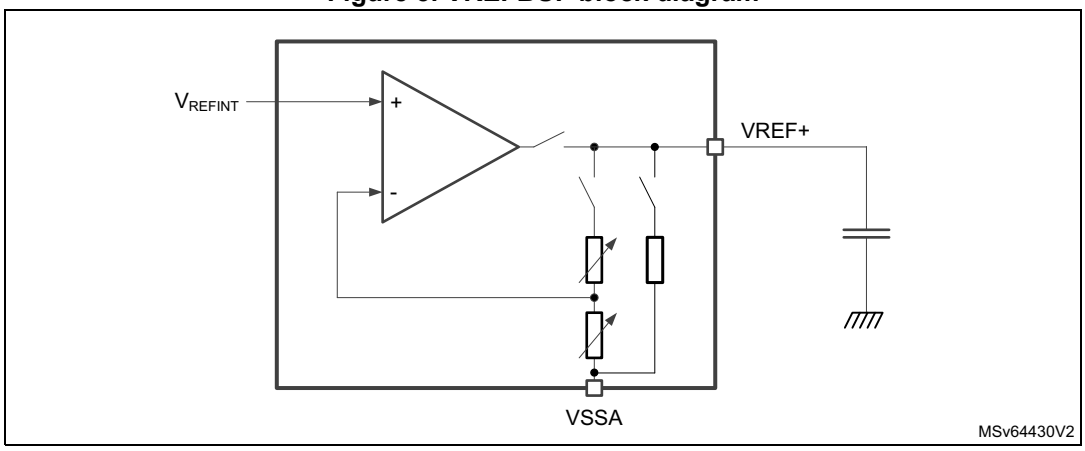

The internal voltage reference buffer supports four voltages: 1.5 V, 1.8 V, 2.048 V and 2.5 V.

An external voltage reference can be provided through the VREF+ pin when the internal voltage reference buffer is off.

The VREF+ pin is double-bonded with VDDA on some packages. In these packages the internal voltage reference buffer is not available.

3.36 Comparators (COMP)

The devices embed two rail-to-rail comparators with programmable reference voltage (internal or external), hysteresis and speed (low speed for low power) and with selectable output polarity.

The reference voltage can be one of the following:

- External I/O
- DAC output channels
- Internal reference voltage or submultiple (1/4, 1/2, 3/4)

All comparators can wake up from Stop 0, Stop 1 and Stop 2 modes, generate interrupts and breaks for the timers and can also be combined into a window comparator.

3.37 Operational amplifiers (OPAMP)

The devices embed two operational amplifiers with external or internal follower routing and PGA capability.

The operational amplifier features:

- Low-input bias current
- Low-offset voltage
- Low-power mode
- Rail-to-rail input

3.38 Multi-function digital filter (MDF) and audio digital filter (ADF)

The table below lists the set of features implemented into the MDF and the ADF.

Table 18. MDF features

MDF modes/features(1)	ADF1	MDF1
Number of filters (DFLTx) and serial interfaces (SITFx)	1	6
ADF_CKI0 / MDF_CKIy connected to pins	-	X
Sound activity detection (SAD)	X	-
RXFIFO depth (number of 24-bit words)	4	4
ADC connected to ADCITF1	-	ADC1
ADC connected to ADCITF2	-	ADC2
Motor dedicated features (SCD, OLD, OEC, INT, snapshot, break)	-	X
Main path with CIC4, CIC5	X	X
Main path with CIC1,2, 3 or FastSinc	-	X
RSFLT, HPF, SAT, SCALE, DLY, Discard functions	X	X
Autonomous in Stop mode	X(2)	X(3)

1. X = supported.
2. Stop 0, Stop 1 and Stop 2 modes only.
3. Stop 0 and Stop 1 modes only.

3.38.1 Multi-function digital filter (MDF)

The MDF is a high-performance module dedicated to the connection of external sigma-delta (ΣΔ) modulators. It is mainly targeted for the following applications:

- audio capture signals
- motor control
- metering

The MDF features six digital serial interfaces (SITFx) and digital filters (DFLTx) with flexible digital processing options to offer up to 24-bit final resolution.

The DFLTx of the MDF also include the filters of the ADF (audio digital filter).

The MDF can receive, via its serial interfaces, streams coming from various digital sensors.

The MDF supports the following standards allowing the connection of various ΣΔ modulator sensors:

- SPI interface
- Manchester coded 1-wire interface
- PDM interface

A flexible BSMX (bitstream matrix) allows the connection of any incoming bitstream to any filter.

The MDF converts an input data stream into clean decimated digital data words. This conversion is done thanks to low-pass digital filters and decimation blocks.In addition it is possible to insert a high-pass filter or DC offset correction block.

The conversion speed and resolution are adjustable according to configurable parameters for digital processing: filter type, filter order, decimation ratio, integrator length. The maximum output data resolution is up to 24 bits. There are two conversion modes: single conversion and continuous modes. The data can be automatically stored in a system RAM buffer through DMA, thus reducing the software overhead.

A flexible trigger interface can be used to control the conversion start. This timing control can trigger simultaneous conversions or insert a programmable delay between conversions.

The MDF features an OLD (out-off limit detectors) function. There is one OLD for each digital filter chain. Independent programmable thresholds are available for each OLD, making it very suitable for over-current detection.

A SCD (short circuit detector) is also available for every selected bitstream. The SCD is able to detect a short-circuit condition with a very short latency. Independent programmable thresholds are offered in order to define the short circuit condition.

All the digital processing is performed using only the kernel clock. The MDF requests the bus interface clock (AHB clock) only when data must be transfered or when a specific event requests the attention of the system processor.

The MDF main features are:

- AHB interface
- Six serial digital inputs:
  - configurable SPI interface to connect various digital sensors
  - configurable Manchester coded interface support
  - compatible with PDM interface to support digital microphones
- Two common clock input/output for ΣΔ modulators
- Flexible BSMX for connection between filters and digital inputs
- Two inputs to connect the internal ADCs
- Six flexible digital filter paths, including:
  - A configurable CIC filter:
    - Can be split into two CIC filters: high-resolution filter and out-off limit detector
    - Can be configured in $Sinc^4$ filter
    - Can be configured in $Sinc^5$ filter
    - Adjustable decimation ratio
  - A reshape filter to improve the out-off band rejection and in-band ripple
  - A high-pass filter to cancel the DC offset

  - An offset error cancellation
  - Gain control
  - Saturation blocks
  - An out-off limit detector
- Short-circuit detector
- Clock absence detector
- 16- or 24-bit signed output data resolution
- Continuous or single conversion
- Possibility to delay independently each bitstream
- Various trigger possibilities
- Break generation on out-of limit or short-circuit detector events
- Autonomous functionality in Stop modes
- DMA can be used to read the conversion data
- Interrupts services

3.38.2 Audio digital filter (ADF)

The ADF is a high-performance module dedicated to the connection of external ΣΔ modulators. It is mainly targeted for the following applications:

- audio capture signals
- metering

The ADF features one digital serial interface (SITF0) and one digital filter (DFLT0) with flexible digital processing options to offer up to 24-bit final resolution.

The DLFT0 of the ADF is a subset of the digital filters included into the MDF.

The ADF serial interface supports several standards allowing the connection of various ΣΔ modulator sensors:

- SPI interface
- Manchester coded 1-wire interface
- PDM interface

A flexible BSMX allows the connection of any incoming bitstream to any filter.

The ADF converts an input data stream into clean decimated digital data words. This conversion is done thanks to low-pass digital filters and decimation blocks. In addition it is possible to insert a high-pass filter or a DC offset correction block.

The conversion speed and resolution are adjustable according to configurable parameters for digital processing: filter type, filter order, decimation ratio. The maximum output data resolution is up to 24 bits. There are two conversion modes: single conversion and continuous modes. The data can be automatically stored in a system RAM buffer through DMA, thus reducing the software overhead.

A SAD (sound activity detector) is available for the detection of “speech-like” signals. The SAD is connected at the output of DFLT0. Several parameters can be programmed to adjust properly the SAD to the sound environment. The SAD can strongly reduce the power consumption by preventing the storage of samples into the system memory as long as the observed signal does not match the programmed criteria.

A flexible trigger interface can be used to control the start of conversion of the ADF.

All the digital processing is performed using only the kernel clock. The ADF requests the bus interface clock (AHB clock) only when data must be transfered or when a specific event requests the attention of the system processor.

The ADF main features are:

- AHB interface
- One serial digital inputs:
  - Configurable SPI interface to connect various digital sensors
  - Configurable Manchester coded interface support
  - Compatible with PDM interface to support digital microphones
- Two common clocks input/output for ΣΔ modulators
- Flexible BSMX for connection between filters and digital inputs
- One flexible digital filter paths, including:
  - A configurable CIC filter:
    - Can be configured in $Sinc^4$ filter
    - Can be configured in $Sinc^5$ filter
    - Adjustable decimation ratio
  - A reshape filter to improve the out-off band rejection and in-band ripple
  - A high-pass filter to cancel the DC offset
  - Gain control
  - Saturation blocks
- Clock absence detector
- Sound activity detector
- 16- or 24-bit signed output data resolution
- Continuous or single conversion
- Possibility to delay independently each bitstream
- Various trigger possibilities
- Autonomous mode in Stop 0, Stop 1 and Stop 2 modes
- Wake-up from Stop with all interrupts
- DMA can be used to read the conversion data
- Interrupts services

3.39 Digital camera interface (DCMI)

The digital camera is a synchronous parallel interface able to receive a high-speed data flow from an external 8-, 10-, 12-, or 14-bit CMOS camera module. It supports different data formats: YCbCr4:2:2/RGB565 progressive video and compressed data (JPEG).

This interface is for use with black and white cameras, X24 and X5 cameras, and it is assumed that all preprocessing such as resizing is performed in the camera module.

The DCMI features are:

- 8-, 10-, 12- or 14-bit parallel interface
- Embedded/external line and frame synchronization
- Continuous or snapshot mode

- Crop feature
- Supports the following data formats:
  - 8/10/12/14-bit progressive video: either monochrome or raw Bayer
  - YCbCr 4:2:2 progressive video
  - RGB 565 progressive video
  - Compressed data: JPEG

3.40 Parallel synchronous slave interface (PSSI)

The PSSI and the DCMI use the same circuitry. As a result, these two peripherals cannot be used at the same time: when using the PSSI, the DCMI registers cannot be accessed, and vice versa. In addition, the PSSI and the DCMI share the same alternate functions and the same interrupt vector.

The PSSI is a generic synchronous 8-/16-bit parallel data input/output slave interface. It enables the transmitter to send a data valid signal that indicates when the data is valid, and the receiver to output a flow control signal that indicates when it is ready to sample the data.

The PSSI peripheral main features are the following:

- Slave mode operation
- 8-bit or 16-bit parallel data input or output
- 4-word (16-byte) FIFO
- Data enable (PSSI_DE) alternate function input and ready (PSSI_RDY) alternate function output

When selected, these inputs can either enable the transmitter to indicate when the data is valid, or allow the receiver to indicate when it is ready to sample the data, or both.

3.41 LCD-TFT display controller (LTDC)

The LCD-TFT (liquid crystal display - thin film transistor) display controller provides a parallel digital RGB (Red, Green, Blue) and signals for horizontal/vertical synchronization, pixel clock and data enable as output to interface directly to a variety of LCD and TFT panels.

The LTDC main features are:

- 24-bit RGB parallel pixel output; 8 bits-per-pixel (RGB888)
- 2 display layers with dedicated FIFO (64x32-bit)
- Color look-up table (CLUT) up to 256 color (256x24-bit) per layer
- Programmable timings for different display panels
- Programmable background color
- Programmable polarity for HSYNC, VSYNC and data enable
- Up to 8 input color formats selectable per layer:
  - ARGB8888
  - RGB888
  - RGB565
  - ARGB1555

  - ARGB4444
  - L8 (8-bit luminance or CLUT)
  - AL44 (4-bit alpha + 4-bit luminance)
  - AL88 (8-bit alpha + 8-bit luminance)
- Pseudo-random dithering output for low bits per channel
  - Dither width 2 bits for Red, Green, Blue
- Flexible blending between two layers using alpha value (per pixel or constant)
- Color keying (transparency color)
- Programmable window position and size
- Supports thin film transistor (TFT) color displays
- AHB master interface with burst of 16 words
- Up to 4 programmable interrupt events

3.42 DSI Host controller (DSI)

The display serial interface (DSI) is part of a group of communication protocols defined by the MIPI Alliance. The MIPI DSI Host controller is a digital core that implements all protocol functions defined in the MIPI DSI specification. It provides an interface between the system (LTDC and APB interface) and the MIPI D-PHY, allowing the user to communicate with a DSI-compliant display.

The DSI main features are:

- Compliant with MIPI Alliance standards
- Interface with internal MIPI D-PHY
- Supports all commands defined in the MIPI Alliance specification for DCS:
  - Transmission of all command mode packets through the APB interface
  - Transmission of commands in low-power and high-speed during video mode
- Support of up to 2 D-PHY data lanes
- Bidirectional communication and escape mode support through data lane 0
- Support of non-continuous clock in D-PHY clock lane for additional power saving
- Support of ultra low-power mode with PLL disabled
- ECC and checksum capabilities
- Support for end of transmission packet (EoTp)
- Fault recovery schemes
- Configurable selection of system interfaces:
  - AMBA® APB for control and optional support for generic and DCS commands
  - Video mode interface through LTDC
  - Adapted command mode interface through LTDC
  - Independently programmable virtual channel ID in video mode, adapted command mode and APB slave
- Video mode interfaces features:
  - LTDC interface color coding mappings into 24-bit interface:
    - 16-bit RGB, configurations 1, 2, and 3
    - 18-bit RGB, configurations 1 and 2

- 24-bit RGB
  - Programmable polarity of all LTDC interface signals
  - Extended resolutions beyond the DPI standard maximum resolution of 800x480 pixels
  - Maximum resolution is limited by available DSI physical link bandwidth:
    - Number of lanes: 2
    - Maximum speed per lane: 500 Mbit/s
- Adapted interface features:
  - Support for sending large amounts of data through the memory_write_start (WMS) and memory_write_continue (WMC) DCS commands
  - LTDC interface color coding mappings into 24-bit interface:
    - 16-bit RGB, configurations 1, 2, and 3
    - 18-bit RGB, configurations 1 and 2
    - 24-bit RGB
- Video mode pattern generator:
  - Vertical and horizontal color bar generation without LTDC stimuli
  - BER pattern without LTDC stimuli

3.43 Touch sensing controller (TSC)

The TSC provides a simple solution to add capacitive sensing functionality to any application. A capacitive sensing technology is able to detect finger presence near an electrode that is protected from direct touch by a dielectric (such as glass or plastic). The capacitive variation introduced by the finger (or any conductive object) is measured using a proven implementation based on a surface charge transfer acquisition principle.

The TSC is fully supported by the STMTouch touch sensing firmware library that is free to use and allows touch sensing functionality to be implemented reliably in the end application.

The TSC main features are the following:

- Proven and robust surface charge transfer acquisition principle
- Supports up to 24 capacitive sensing channels
- Up to eight capacitive sensing channels can be acquired in parallel offering a very good response time
- Spread spectrum feature to improve system robustness in noisy environments
- Full hardware management of the charge transfer acquisition sequence
- Programmable charge transfer frequency
- Programmable sampling capacitor I/O pin
- Programmable channel I/O pin
- Programmable max count value to avoid long acquisition when a channel is faulty
- Dedicated end of acquisition and max count error flags with interrupt capability
- One sampling capacitor for up to three capacitive sensing channels to reduce the system components
- Compatible with proximity, touchkey, linear and rotary touch sensor implementation
- Designed to operate with STMTouch touch sensing firmware library

Note: The number of capacitive sensing channels is dependent on the size of the packages and subject to I/O availability.

3.44 True random number generator (RNG)

The RNG is a true random number generator that provides full entropy outputs to the application as 32-bit samples. It is composed of a live entropy source (analog) and an internal conditioning component.

The RNG is a NIST SP 800-90B compliant entropy source that can be used to construct a non-deterministic random bit generator (NDRBG).

The true random generator:

- delivers 32-bit true random numbers, produced by an analog entropy source conditioned by a NIST SP800-90B approved conditioning stage
- can be used as entropy source to construct a non-deterministic random bit generator (NDRBG)
- produces four 32-bit random samples every 412 AHB clock cycles if f_{AHB} < 77 MHz (256 RNG clock cycles otherwise)
- embeds startup and NIST SP800-90B approved continuous health tests (repetition count and adaptive proportion tests), associated with specific error management
- can be disabled to reduce power consumption, or enabled with an automatic low-power mode (default configuration)
- has an AMBA AHB slave peripheral, accessible through 32-bit word single accesses only (else an AHB bus error is generated, and the write accesses are ignored)

3.45 Secure advanced encryption standard hardware accelerator (SAES) and encryption standard hardware accelerator (AES)

The devices embed two AES accelerators: SAES and AES. The SAES with hardware unique key embeds protection against differential power analysis (DPA) and related side channel attacks. The SAES can share its current key register information with the faster AES using a dedicated hardware bus.

The SAES and the AES can be used to both encrypt and decrypt data using the AES algorithm. It is a fully compliant implementation of the advanced encryption standard (AES) as defined by Federal Information Processing Standards Publication (FIPS PUB 197, Nov 2001).

Multiple chaining modes are supported for key sizes of 128 or 256 bits. ECB and CBC chaining is supported by both SAES and AES, while CTR, CCM, GCM and GMAC chaining is only supported by the AES.

SAES and AES support DMA single transfers for incoming and outgoing data (two DMA channels required).

The SAES supports the selection of all the following key sources, while the AES support only the first:

- 256-bit software key, written by the application in the key registers (write only)
- 256-bit derived hardware unique key (DHUK), computed inside the SAES engine from a non-volatile OTP based root hardware unique key (RHUK)
- 256-bit boot hardware key (BHK), stored in tamper-resistant secure backup registers, written by a secure code during boot. Once written, this key cannot be read or write by any application until the next product reset.
- XOR of DHUK (provisioned chip secret) and BHK (software secret)

DHUK, BHK and their XOR are not visible by any software (even secure).

Note: 128-bit key size can also be selected.

BHK key is cleared in case of tamper or RDP regression.

When the SAES is secure (respectively nonsecure), DHUK secure (respectively nonsecure) is used.

The SAES peripheral is connected by hardware to the true random number generator RNG (for side-channel resistance).

The SAES and AES peripherals support:

- Compliant implementation of standard NIST *Special Publication 197, Advanced Encryption Standard (AES)* and *Special Publication 800-38A, Recommendation for Block Cipher Modes of Operation*
- 128-bit data block processing
- Support for cipher keys length of 128-bit and 256-bit
- Encryption and decryption with multiple chaining modes:
  - Electronic codebook (ECB) mode
  - Cipher block chaining (CBC) mode
- Additional chaining modes supported by AES only:
  - Counter (CTR) mode
  - Galois counter mode (GCM)
  - Galois message authentication code (GMAC) mode
  - Counter with CBC-MAC (CCM) mode
- 528 or 743 clock cycle latency in ECB encryption mode for SAES processing one 128-bit block of data with, respectively, 128-bit or 256-bit key
- 51 or 75 clock cycle latency in ECB encryption mode for AES processing one 128-bit block of data with, respectively, 128-bit or 256-bit key
- Integrated round key scheduler to compute the last round key for AES ECB/CBC decryption
- 256-bit register for storing the cryptographic key (four 32-bit registers), with key atomicity enforcement
- 128-bit registers for storing initialization vectors (four 32-bit registers)
- One 32-bit input buffer and one 32-bit output buffer

- Automatic data flow control with support of single-transfer direct memory access (DMA) using two channels (one for incoming data, one for processed data)
- Data swapping logic to support 1-, 8-, 16- or 32-bit data
- Possibility for software to suspend a message if the SAES/AES needs to process another message with a higher priority (suspend/resume operation)
- SAES additional features:
  - Security context enforcement for keys
  - Hardware secret key encryption/ decryption (wrapped key mode) and sharing with faster AES peripheral (Shared key mode)
  - Protection against differential power analysis (DPA) and related side-channel attacks
  - Optional hardware loading of two hardware secret keys (BHK, DHUK) that can be XORed together

On top of standard AES encryption and decryption with a key loaded by software, SAES peripheral allows the following advanced use cases:

- Allow or deny the sharing of a key between a secure and a nonsecure application, enforced by hardware
- Encrypt once a key using side-channel resistant AES, then share it to a faster AES engine by decrypting it (Shared key mode)
- On-chip encrypted storage using chip-unique secret DHUK
- Transport key generation by encrypting the device public unique ID with the application secret BHK
- Binding of device secure storage keys, using the silicon unique secret key (DHUK) XORed with the boot secret key (BHK). If BHK is lost, the whole device secure storage is lost.

Note: Encrypted storage or derived keys that are using DHUK or BHK, cannot be used anymore when a security breach is detected.

Table 19. AES/SAES features

AES/SAES modes/features[1]	AES	SAES
ECB, CBC chaining	X	X
CTR, CCM, GCM chaining	X	-
AES 128-bit ECB encryption in cycles	51	528
DHUK and BHK key selection	-	X
Side-channel attacks resistance	-	X
Shared key between SAES and AES	X	

1. X = supported.

3.46 HASH hardware accelerator (HASH)

The HASH is a fully compliant implementation of the secure hash algorithm (SHA-1, SHA-224, SHA-256), the MD5 (message-digest algorithm 5) hash algorithm and the HMAC (keyed-hash message authentication code) algorithm. HMAC is suitable for applications requiring message authentication.

The HASH computes FIPS (Federal information processing standards) approved digests of length of 160, 224, 256 bits, for messages of up to (2^{64} – 1) bits. It also computes 128 bits digests for the MD5 algorithm.

The HASH main features are:

- Suitable for data authentication applications, compliant with:
  - Federal Information Processing Standards Publication FIPS PUB 180-4, *Secure Hash Standard* (SHA-1 and SHA-2 family)
  - Federal Information Processing Standards Publication FIPS PUB 186-4, *Digital* Signature Standard (DSS)
  - Internet Engineering Task Force (IETF) Request For Comments RFC 1321, *MD5* Message-Digest Algorithm
  - Internet Engineering Task Force (IETF) Request For Comments RFC 2104, *HMAC: Keyed-Hashing for Message Authentication* and Federal Information Processing Standards Publication FIPS PUB 198-1, *The Keyed-Hash Message* Authentication Code (HMAC)
- Fast computation of SHA-1, SHA-224, SHA-256, and MD5
  - 82 (respectively 66) clock cycles for processing one 512-bit block of data using SHA-1 (respectively SHA-256) algorithm
  - 66 clock cycles for processing one 512-bit block of data using MD5 algorithm
- Corresponding 32-bit words of the digest from consecutive message blocks are added to each other to form the digest of the whole message:
  - Automatic 32-bit words swapping to comply with the internal little-endian representation of the input bit string
  - Word swapping supported: bits, bytes, half-words and 32-bit words
- Automatic padding to complete the input bit string to fit digest minimum block size of 512 bits (16 × 32 bits)
- Single 32-bit input register associated to an internal input FIFO of sixteen 32-bit words, corresponding to one block size
- AHB slave peripheral, accessible through 32-bit word accesses only (else an AHB error is generated)
- 8 × 32-bit words (H0 to H7) for output message digest
- Automatic data flow control with support of direct memory access (DMA) using one channel. Single or fixed burst of 4 supported.
- Interruptible message digest computation, on a per-32-bit word basis
  - Re-loadable digest registers
  - Hashing computation suspend/resume mechanism, including using DMA

3.47 On-the-fly decryption engine (OTFDEC)

The OTFDEC allows the decryption of the on-the-fly AHB traffic based on the read request address information, for example execute-in-place of a code stored encrypted. Four independent and non-overlapping encrypted regions can be defined in OTFDEC.

OTFDEC uses AES-128 in counter mode to achieve the lowest possible latency.
As consequence, each time the content of one encrypted region is changed the entire region must be re-encrypted with a different cryptographic context (key or initialization

vector). This constraint makes OTFDEC suitable to decrypt read-only data or code, stored in external NOR flash.

Note: When OTFDEC is used in conjunction with OCTOSPI, it is mandatory to access the flash memory using the Memory-mapped mode of the flash memory controller.

When security is enabled in the product, OTFDEC can be programmed only by a secure host.

The OTFDEC main features are the following:

- On-the-fly 128-bit decryption during OCTOSPI memory-mapped read operations (single or multiple)
  - Use of AES in counter (CTR) mode, with two 128-bit keystream buffers
  - Support for any read size
  - Physical address of the reads is used for the encryption/decryption
- Up to 4 independent encrypted regions
  - Granularity of the region definition: 4096 bytes
  - Region configuration write locking mechanism
  - Each region has its own 128-bit key, two bytes firmware version, and eight bytes application-defined nonce. At least one of those must be changed each time an encryption is performed by the application.
- Encryption keys confidentiality and integrity protection
  - Write-only registers, with software locking mechanism
  - Availability of 8-bit CRC as public key information
- Support for OCTOSPI prefetching mechanism
- Possibility to select an enhanced encryption mode to add a proprietary layer of protection on top of AES stream cipher (execute only)
- AMBA® AHB slave peripheral, accessible through 32-bit word single accesses only (otherwise an AHB bus error is generated, and write accesses are ignored)
- Secure only programming if TrustZone security is enabled
- Encryption mode

3.48 Public key accelerator (PKA)

The PKA is intended for the computation of cryptographic public key primitives, specifically those related to RSA, Diffie-Hellmann or ECC (elliptic curve cryptography) over GF(p) (Galois fields). To achieve high performance at a reasonable cost, these operations are executed in the Montgomery domain.

All needed computations are performed within the accelerator, so no further hardware/software elaboration is needed to process the inputs or the outputs.

The PKA main features are:

- Acceleration of RSA, DH and ECC over GF(p) operations, based on the Montgomery method for fast modular multiplications. More specifically:
  - RSA modular exponentiation, RSA Chinese remainder theorem (CRT) exponentiation
  - ECC scalar multiplication, point on curve check, complete addition, double base ladder, projective to affine
  - ECDSA signature generation and verification
- Capability to handle operands up to 4160 bits for RSA/DH and 640 bits for ECC
- Arithmetic and modular operations such as addition, subtraction, multiplication, modular reduction, modular inversion, comparison, and Montgomery multiplication
- Built-in Montgomery domain inward and outward transformations
- Protection against differential power analysis (DPA) and related side-channel attacks.

3.49 Timers and watchdogs

The devices include two advanced control timers, up to seven general-purpose timers, two basic timers, four low-power timers, two watchdog timers and two SysTick timers.

The table below compares the features of the advanced control, general-purpose and basic timers.

Table 20. Timer feature comparison

Timer type	Timer	Counter resolution	Counter type	Prescaler factor	DMA request generation	Capture/ compare channels	Complementary outputs
Advanced control	TIM1, TIM8	16 bits	Up, down, Up/down	Any integer between 1 and 65536	Yes	4	3
General-purpose	TIM2, TIM3, TIM4, TIM5	32 bits	Up, down, Up/down	Any integer between 1 and 65536	Yes	4	No
General-purpose	TIM15	16 bits	Up	Any integer between 1 and 65536	Yes	2	1
General-purpose	TIM16, TIM17	16 bits	Up	Any integer between 1 and 65536	Yes	1	1
Basic	TIM6, TIM7	16 bits	Up	Any integer between 1 and 65536	Yes	0	No

3.49.1 Advanced-control timers (TIM1, TIM8)

The advanced-control timers can each be seen as a three-phase PWM multiplexed on six channels. They have complementary PWM outputs with programmable inserted dead-times. They can also be seen as complete general-purpose timers.

The four independent channels can be used for:

- Input capture
- Output compare
- PWM generation (edge or center-aligned modes) with full modulation capability (0 - 100 %)
- One-pulse mode output

In Debug mode, the advanced-control timer counter can be frozen and the PWM outputs disabled in order to turn off any power switches driven by these outputs.

Many features are shared with the general-purpose TIMx timers (described in the next section) using the same architecture, so the advanced-control timers can work together with the TIMx timers via the *Timer Link* feature for synchronization or event chaining.

3.49.2 General-purpose timers (TIM2, TIM3, TIM4, TIM5, TIM15, TIM16,TIM17)

There are up to seven synchronizable general-purpose timers embedded in the STM32U5Gxxx devices (see *Table 20* for differences). Each general-purpose timer can be used to generate PWM outputs, or act as a simple time base.

- TIM2, TIM3, TIM4 and TIM5

  They are full-featured general-purpose timers with 32-bit auto-reload up/downcounter and 16-bit prescaler.

  These timers feature four independent channels for input capture/output compare, PWM or one-pulse mode output. They can work together, or with the other general-purpose timers via the *Timer Link* feature for synchronization or event chaining.

  The counters can be frozen in Debug mode.

  All have independent DMA request generation and support quadrature encoders.
- TIM15, 16 and 17

  They are general-purpose timers with mid-range features.

  They have 16-bit auto-reload upcounters and 16-bit prescalers.

  – TIM15 has two channels and one complementary channel

  – TIM16 and TIM17 have one channel and one complementary channel

  All channels can be used for input capture/output compare, PWM or one-pulse mode output.

  The timers can work together via the *Timer Link* feature for synchronization or event chaining. The timers have independent DMA request generation.

  The counters can be frozen in Debug mode.

3.49.3 Basic timers (TIM6 and TIM7)

The basic timers are mainly used for DAC trigger generation. They can also be used as generic 16-bit timebase.

3.49.4 Low-power timers (LPTIM1, LPTIM2, LPTIM3, LPTIM4)

The devices embed four low-power timers. These timers have an independent clock and are running in Stop mode if they are clocked by HSI16, MSI, LSE, LSI or an external clock. They are able to wake up the system from Stop mode.

LPTIM1, LPTIM3, and LPTIM4 are active in Stop 0, Stop 1 and Stop 2 modes.

LPTIM2 is active in Stop 0 and Stop 1 mode.

The low-power timer supports the following features:

- 16-bit up counter with 16-bit autoreload register
- 3-bit prescaler with eight possible dividing factors (1, 2, 4, 8, 16, 32, 64, 128)
- Selectable clock
  - Internal clock sources: LSE, LSI, HSI16, MSIK (LPTIM1, LPTIM3, LPTIM4 only) or APB clock (LPTIM2 only)
  - External clock source over LPTIM input (working with no LP oscillator running, used by *Pulse Counter* application)
- 16-bit ARR autoreload register
- 16-bit capture/compare register
- Continuous/One-shot mode
- Selectable software/hardware input trigger
- Programmable digital glitch filter
- Configurable output: pulse, PWM
- Configurable I/O polarity
- Encoder mode
- Repetition counter
- Up to 2 independent channels for:
  - Input capture
  - PWM generation (edge-aligned mode)
  - One-pulse mode output
- Interrupt generation on 10 events
- DMA request generation on the following events:
  - Update event
  - Input capture

3.49.5 Infrared interface (IRTIM)

An infrared interface (IRTIM) for remote control is available on the device. It can be used with an infrared LED to perform remote control functions. It uses internal connections with TIM16 and TIM17.

3.49.6 Independent watchdog (IWDG)

The independent watchdog is based on a 12-bit downcounter and a 8-bit prescaler. It is clocked from an independent 32 kHz internal RC (LSI) and, as it operates independently from the main clock, it can operate in Stop and Standby modes. It can be used either as a watchdog to reset the device when a problem occurs, or as a free running timer for

application timeout management. It is hardware or software configurable through the option bytes. The counter can be frozen in Debug mode.

3.49.7 Window watchdog (WWDG)

The window watchdog is based on a 7-bit downcounter that can be set as free running. It can be used as a watchdog to reset the device when a problem occurs. It is clocked from the main clock. It has an early warning interrupt capability and the counter can be frozen in Debug mode.

3.49.8 SysTick timer

The Cortex-M33 with TrustZone embeds two SysTick timers.

When TrustZone is activated, two SysTick timer are available:

- SysTick, secure instance
- SysTick, nonsecure instance

When TrustZone is disabled, only one SysTick timer is available. This timer (secure or non-secure) is dedicated to real-time operating systems, but can also be used as a standard down counter. It features:

- A 24-bit down counter
- Autoreload capability
- Maskable system interrupt generation when the counter reaches 0
- Programmable clock source.

3.50 Real-time clock (RTC), tamper and backup registers

3.50.1 Real-time clock (RTC)

The RTC supports the following features:

- Calendar with subsecond, seconds, minutes, hours (12 or 24 format), weekday, date, month, year, in BCD (binary-coded decimal) format
- Binary mode with 32-bit free-running counter
- Automatic correction for 28, 29 (leap year), 30, and 31 days of the month
- Two programmable alarms
- On-the-fly correction from 1 to 32767 RTC clock pulses. This can be used to synchronize it with a master clock
- Reference clock detection: a more precise second source clock (50 or 60 Hz) can be used to enhance the calendar precision
- Digital calibration circuit with 0.95 ppm resolution, to compensate for quartz crystal inaccuracy
- Timestamp feature that can be used to save the calendar content. This function can be triggered by an event on the timestamp pin, or by a tamper event, or by a switch to V_{BAT} mode
- 17-bit auto-reload wake-up timer (WUT) for periodic events with programmable resolution and period
- TrustZone support:

- RTC fully securable
- Alarm A, alarm B, wake-up timer and timestamp individual secure or nonsecure configuration
- Alarm A, alarm B, wake-up timer and timestamp individual privileged protection

The RTC is supplied through a switch that takes power either from the V_{DD} supply when present or from the VBAT pin.

The RTC clock sources can be one of the following:

- 32.768 kHz external crystal (LSE)
- external resonator or oscillator (LSE)
- internal low-power RC oscillator (LSI, with typical frequency of 32 kHz)
- high-speed external clock (HSE), divided by a prescaler in the RCC.

The RTC is functional in V_{BAT} mode and in all low-power modes when it is clocked by the LSE. When clocked by the LSI, the RTC is not functional in V_{BAT} mode, but is functional in all low-power modes except Shutdown mode.

All RTC events (alarm, wake-up timer, timestamp) can generate an interrupt and wake-up the device from the low-power modes.

3.50.2 Tamper and backup registers (TAMP)

The anti-tamper detection circuit is used to protect sensitive data from external attacks. 32 32-bit backup registers are retained in all low-power modes and also in V_{BAT} mode. The backup registers, as well as other secrets in the device, are protected by this anti-tamper detection circuit with eight tamper pins and eleven internal tampers. The external tamper pins can be configured for edge detection, or level detection with or without filtering, or active tamper that increases the security level by auto checking that the tamper pins are not externally opened or shorted.

TAMP main features:

- A tamper detection can erase the backup registers, backup SRAM, SRAM2, caches and cryptographic peripherals.
- 32 32-bit backup registers:
  - The backup registers (TAMP_BKPxR) are implemented in the Backup domain that remains powered-on by V_{BAT} when the V_{DD} power is switched off.
- Up to 8 tamper pins for 8 external tamper detection events:
  - Active tamper mode: continuous comparison between tamper output and input to protect from physical open-short attacks
  - Flexible active tamper I/O management: from 4 meshes (each input associated to its own exclusive output) to 7 meshes (single output shared for up to 7 tamper inputs)
  - Passive tampers: ultra-low-power edge or level detection with internal pull-up hardware management
  - Configurable digital filter
- 11 internal tamper events to protect against transient or environmental perturbation attacks:
  - Backup domain voltage monitoring
  - Temperature monitoring

  - LSE monitoring
  - RTC calendar overflow
  - JTAG/SWD access if RDP different from 0
  - Monotonic counter overflow
  - Cryptographic peripherals fault (RNG, SAES, AES, PKA)
  - Independent watchdog reset when tamper flag is already set
  - 3 ADC4 watchdogs
- Each tamper can be configured in two modes:
  - Hardware mode: immediate erase of secrets on tamper detection, including backup registers erase
  - Software mode: erase of secrets following a tamper detection launched by software
- Any tamper detection can generate a RTC time stamp event.
- TrustZone support:
  - Tamper secure or nonsecure configuration
  - Backup registers configuration in 3 configurable-size areas:
    - 1 read/write secure area
    - 1 write secure/read nonsecure area
    - 1 read/write nonsecure area
  - Boot secret key (BHK) only usable by secure AES peripheral, stored in backup registers, protected against read and write access
- Tamper configuration and backup registers privilege protection
- Monotonic counter

3.51 Inter-integrated circuit interface (I2C)

The device embeds six I2C. Refer to *Table 21* for the features implementation.

The I^2C bus interface handles communications between the microcontroller and the serial I^2C bus. It controls all I^2C bus-specific sequencing, protocol, arbitration and timing.

The I2C peripheral supports:

- I^2C-bus specification and user manual rev. 5 compatibility:
  - Controller and target modes, multicontroller capability
  - Standard-mode (Sm), with a bit rate up to 100 Kbit/s
  - Fast-mode (Fm), with a bit rate up to 400 Kbit/s
  - Fast-mode Plus (Fm+), with a bit rate up to 1 Mbit/s and 20 mA output drive I/Os
  - 7-bit and 10-bit addressing mode, multiple 7-bit target addresses
  - Programmable setup and hold times
  - Optional clock stretching
- System management bus (SMBus) specification rev 3.0 compatibility:
  - Hardware PEC (packet error checking) generation and verification with ACK control
  - Address resolution protocol (ARP) support
  - SMBus alert

- Power system management protocol (PMBus) specification rev 1.3 compatibility
- Independent clock: a choice of independent clock sources allowing the I2C communication speed to be independent from the PCLK reprogramming
- Autonomous functionality in Stop modes with wake-up from Stop capability
- Programmable analog and digital noise filters
- 1-byte buffer with DMA capability

Table 21. I2C implementation

I2C features[1]	I2C1	I2C2	I2C3	I2C4	I2C5	I2C6
Standard-mode (up to 100 kbit/s)	X	X	X	X	X	X
Fast-mode (up to 400 kbit/s)	X	X	X	X	X	X
Fast-mode Plus with 20 mA output drive I/Os (up to 1 Mbit/s)	X	X	X	X	X	X
Programmable analog and digital noise filters	X	X	X	X	X	X
SMBus/PMBus hardware support	X	X	X	X	X	X
Independent clock	X	X	X	X	X	X
Autonomous in Stop 0, Stop 1 mode with wake-up capability	X	X	X	X	X	X
Autonomous in Stop 2 mode with wake-up capability	-	-	X	-	-	-

1. X: supported

3.52 Universal synchronous/asynchronous receiver transmitter (USART/UART) and low-power universal asynchronous receiver transmitter (LPUART)

The devices embed four universal synchronous receiver transmitters (USART1, USART2, USART3 and USART6), two universal asynchronous receiver transmitters (UART4, UART5) and one low-power universal asynchronous receiver transmitter (LPUART1).

Table 22. USART, UART, and LPUART features

USART modes/features[1]	USART1/2/3/6	UART4/5	LPUART1
Hardware flow control for modem	X	X	X
Continuous communication using DMA	X	X	X
Multiprocessor communication	X	X	X
Synchronous SPI mode (master/slave)	X	-	-
Smartcard mode	X	-	-
Single-wire half-duplex communication	X	X	X
IrDA SIR ENDEC block	X	X	-
LIN mode	X	X	-
Dual-clock domain and wake-up from Stop mode	X[2]	X[2]	X[3]
Receiver timeout interrupt	X	X	-

Table 22. USART, UART, and LPUART features (continued)

USART modes/features[1]	USART1/2/3/6	UART4/5	LPUART1
Modbus communication	X	X	-
Auto-baud rate detection	X	X	-
Driver enable	X	X	X
USART data length	7, 8 and 9 bits		
Tx/Rx FIFO	X	X	X
Tx/Rx FIFO size	8 bytes		
Autonomous mode	X	X	X

1. X = supported.
2. Wake-up supported from Stop 0 and Stop 1 modes.
3. Wake-up supported from Stop 0, Stop 1 and Stop 2 modes.

3.52.1 Universal synchronous/asynchronous receiver transmitter (USART/UART)

The USART offers a flexible means to perform full-duplex data exchange with external equipments requiring an industry standard NRZ asynchronous serial data format. A very wide range of baud rates can be achieved through a fractional baud rate generator.

The USART supports both synchronous one-way and half-duplex single-wire communications, as well as LIN (local interconnection network), Smartcard protocol, IrDA (infrared data association) SIR ENDEC specifications, and modem operations (CTS/RTS). Multiprocessor communications are also supported.

High-speed data communications up to 20 Mbauds are possible by using the DMA (direct memory access) for multibuffer configuration.

The USART main features are:

- Full-duplex asynchronous communication
- NRZ standard format (mark/space)
- Configurable oversampling method by 16 or 8 to achieve the best compromise between speed and clock tolerance
- Baud rate generator systems
- Two internal FIFOs for transmit and receive data
  Each FIFO can be enabled/disabled by software and come with a status flag.
- A common programmable transmit and receive baud rate
- Dual-clock domain with dedicated kernel clock for peripherals independent from PCLK
- Auto baud rate detection
- Programmable data word length (7, 8 or 9 bits)
- Programmable data order with MSB-first or LSB-first shifting
- Configurable stop bits (1 or 2 stop bits)
- Synchronous SPI master/slave mode and clock output/input for synchronous communications
- SPI slave transmission underrun error flag
- Single-wire half-duplex communications

- Continuous communications using DMA
- Received/transmitted bytes are buffered in reserved SRAM using centralized DMA
- Separate enable bits for transmitter and receiver
- Separate signal polarity control for transmission and reception
- Swappable Tx/Rx pin configuration
- Hardware flow control for modem and RS-485 transceiver
- Communication control/error detection flags
- Parity control:
  - Transmits parity bit
  - Checks parity of received data byte
- Interrupt sources with flags
- Multiprocessor communications: wake-up from Mute mode by idle line detection or address mark detection
- Autonomous functionality in Stop mode with wake-up from stop capability
- LIN master synchronous break send capability and LIN slave break detection capability
  - 13-bit break generation and 10/11-bit break detection when USART is hardware configured for LIN
- IrDA SIR encoder decoder supporting 3/16-bit duration for Normal mode
- Smartcard mode
  - Supports the T=0 and T=1 asynchronous protocols for smartcards as defined in the ISO/IEC 7816-3 standard
  - 0.5 and 1.5 stop bits for Smartcard operation
- Support for Modbus communication
  - Timeout feature
  - CR/LF character recognition

3.52.2 Low-power universal asynchronous receiver transmitter (LPUART)

The LPUART supports bidirectional asynchronous serial communication with minimum power consumption. It also supports half-duplex single-wire communication and modem operations (CTS/RTS). It allows multiprocessor communication.

Only a 32.768 kHz clock (LSE) is needed to allow LPUART communication up to 9600 baud. Therefore, even in Stop mode, the LPUART can wait for an incoming frame while having an extremely low energy consumption. Higher-speed clock can be used to reach higher baudrates.

The LPUART interface can be served by the DMA controller.

The LPUART main features are:

- Full-duplex asynchronous communications
- NRZ standard format (mark/space)
- Programmable baud rate
- From 300 baud/s to 9600 baud/s using a 32.768 kHz clock source
- Higher baud rates can be achieved by using a higher frequency clock source

- Two internal FIFOs to transmit and receive data
  Each FIFO can be enabled/disabled by software and come with status flags for FIFO states.
- Dual-clock domain with dedicated kernel clock for peripherals independent from PCLK
- Programmable data word length (7 or 8 or 9 bits)
- Programmable data order with MSB-first or LSB-first shifting
- Configurable stop bits (1 or 2 stop bits)
- Single-wire half-duplex communications
- Continuous communications using DMA
- Received/transmitted bytes are buffered in reserved SRAM using centralized DMA
- Separate enable bits for transmitter and receiver
- Separate signal polarity control for transmission and reception
- Swappable Tx/Rx pin configuration
- Hardware flow control for modem and RS-485 transceiver
- Transfer detection flags:
  - Receive buffer full
  - Transmit buffer empty
  - Busy and end of transmission flags
- Parity control:
  - Transmits parity bit
  - Checks parity of received data byte
- Four error detection flags:
  - Overrun error
  - Noise detection
  - Frame error
  - Parity error
- Interrupt sources with flags
- Multiprocessor communications: wake-up from Mute mode by idle line detection or address mark detection
- Autonomous functionality in Stop mode with wake-up from Stop capability

3.53 Serial peripheral interfaces (SPI)

The devices embed three serial peripheral interfaces (SPI) that can be used to communicate with external devices while using the specific synchronous protocol. The SPI protocol supports half-duplex, full-duplex and simplex synchronous, serial communication with external devices.

The interface can be configured as master or slave and can operate in multi-slave or multi-master configurations. The device configured as master provides communication clock (SCK) to the slave device. The slave select (SS) and ready (RDY) signals can be applied optionally just to setup communication with concrete slave and to assure it handles the data flow properly. The Motorola® data format is used by default, but some other specific modes are supported as well.

The SPI main features are:

- Full-duplex synchronous transfers on three lines
- Half-duplex synchronous transfer on two lines (with bidirectional data line)
- Simplex synchronous transfers on two lines (with unidirectional data line)
- 4-bit to 32-bit data size selection or fixed to 8-bit and 16-bit only
- Multi master or multi slave mode capability
- Dual-clock domain, separated clock for the peripheral kernel that can be independent of PCLK
- Baud rate prescaler up to kernel frequency/2 or bypass from RCC in Master mode
- Protection of configuration and setting
- Hardware or software management of SS for both master and slave
- Adjustable minimum delays between data and between SS and data flow
- Configurable SS signal polarity and timing, MISO x MOSI swap capability
- Programmable clock polarity and phase
- Programmable data order with MSB-first or LSB-first shifting
- Programmable number of data within a transaction to control SS and CRC
- Dedicated transmission and reception flags with interrupt capability
- SPI Motorola® and Texas Instruments® formats support
- Hardware CRC feature can secure communication at the end of transaction by:
  - Adding CRC value in Tx mode
  - Automatic CRC error checking for Rx mode
- Error detection with interrupt capability in case of data overrun, CRC error, data underrun at slave, mode fault at master
- Two 16x or 8x 8-bit embedded Rx and TxFIFOs with DMA capability
- Programmable number of data in transaction
- Configurable FIFO thresholds (data packing)
- Configurable behavior at slave underrun condition (support of cascaded circular buffers)
- Autonomous functionality in Stop modes (handling of the transaction flow and required clock distribution) with wake-up from stop capability
- Optional status pin RDY signalizing the slave device ready to handle the data flow.

Table 23. SPI features

SPI feature	SPI1, SPI2 (full feature set instances)	SPI3 (limited feature set instance)
Data size	Configurable from 4 to 32-bit	8/16-bit
CRC computation	CRC polynomial length configurable from 5 to 33-bit	CRC polynomial length configurable from 9 to 17-bit
Size of FIFOs	16x 8-bit	8x 8-bit
Number of transfered data	Unlimited, expandable	Up to 1024, no data counter

Table 23. SPI features (continued)

SPI feature	SPI1, SPI2 (full feature set instances)	SPI3 (limited feature set instance)
Autonomous in Stop 0, Stop 1 mode with wake-up capability	Yes	Yes
Autonomous in Stop 2 mode with wake-up capability	No	Yes

3.54 Serial audio interfaces (SAI)

The devices embed two SAI. Refer to *Table 24: SAI implementation* for the features implementation. The SAI bus interface handles communications between the microcontroller and the serial audio protocol.

The SAI peripheral supports:

- Two independent audio sub-blocks that can be transmitters or receivers with their respective FIFO
- 8-word integrated FIFOs for each audio sub-block
- Synchronous or Asynchronous mode between the audio sub-blocks
- Master or slave configuration independent for both audio sub-blocks
- Clock generator for each audio block to target independent audio frequency sampling when both audio sub-blocks are configured in master mode
- Data size configurable: 8-, 10-, 16-, 20-, 24-, 32-bit
- Peripheral with large configurability and flexibility allowing to target as example the following audio protocol: I2S, LSB or MSB-justified, PCM/DSP, TDM, AC’97 and SPDIF out
- Up to 16 slots available with configurable size and with the possibility to select which ones are active in the audio frame
- Number of bits by frame may be configurable
- Frame synchronization active level configurable (offset, bit length, level)
- First active bit position in the slot is configurable
- LSB first or MSB first for data transfer
- Mute mode
- Stereo/mono audio frame capability
- Communication clock strobing edge configurable (SCK)
- Error flags with associated interrupts if enabled respectively
  - Overrun and underrun detection
  - Anticipated frame synchronization signal detection in Slave mode
  - Late frame synchronization signal detection in Slave mode
  - Codec not ready for the AC’97 mode in reception
- Interruption sources when enabled:
  - Errors
  - FIFO requests

- DMA interface with two dedicated channels to handle access to the dedicated integrated FIFO of each SAI audio sub-block.

Table 24. SAI implementation

SAI features[1]	SAI1	SAI2
I2S, LSB or MSB-justified, PCM/DSP, TDM, AC'97	X	X
Mute mode	X	X
Stereo/mono audio frame capability.	X	X
16 slots	X	X
Data size configurable: 8-, 10-, 16-, 20-, 24-, 32-bit	X	X
FIFO size	X (8 words)	X (8 words)
SPDIF	X	X
PDM	X	-

1. X: supported

3.55 Secure digital input/output and MultiMediaCards interface (SDMMC)

The SDMMC (SD/SDIO embedded MultiMediaCard *e*•MMC™ host interface) provides an interface between the AHB bus and SD memory cards, SDIO cards and *e*•MMC devices.

The MultiMediaCard system specifications are available through the MultiMediaCard association website at www.mmca.org, published by the MMCA technical committee.

SD memory card and SD I/O card system specifications are available through the SD card Association website at www.sdcard.org.

The SDMMC features include the following:

- Compliance with Embedded MultiMediaCard System Specification Version 5.1

  Card support for three different databus modes: 1-bit (default), 4-bit and 8-bit

  (HS200 SDMMC_CK speed limited to maximum allowed I/O speed) (HS400 is not supported).
- Full compatibility with previous versions of MultiMediaCards (backward compatibility).
- Full compliance with *SD memory card specifications version 6.0*

  (SDR104 SDMMC_CK speed limited to maximum allowed I/O speed, SPI mode and UHS-II mode not supported).
- Full compliance with *SDIO card specification version 4.0*

  Card support for two different databus modes: 1-bit (default) and 4-bit

  (SDR104 SDMMC_CK speed limited to maximum allowed I/O speed, SPI mode and UHS-II mode not supported).
- Data transfer up to 208 Mbyte/s for the 8-bit mode

  (Depending maximum allowed I/O speed).
- Data and command output enable signals to control external bidirectional drivers
- IDMA linked list support

The MultiMediaCard/SD bus connects cards to the host.

The current version of the SDMMC supports only one SD/SDIO/*e*•MMC card at any one time and a stack of *e*•MMC.

Table 25. SDMMC features

SDMMC modes/features[1]	SDMMC1	SDMMC2
Variable delay (SDR104, HS200)	X	X
SDMMC_CKIN	X	-
SDMMC_CDIR, SDMMC_D0DIR	X	-
SDMMC_D123DIR	X	-

1. X = supported.

When SDMMC peripherals are used simultaneously:

- Only one can be used in *e*•MMC with 8-bit bus width.
- The SDMMC1 SDIO voltage switch use is mutually exclusive with SDMMC2 interfacing *e*•MMC with 8-bit bus width, as follows:
  - If SDMMC1 has to support SDIO UHS-I modes (SDR12, SDR25, SDR50, SDR104 or DDR50), SDMMC2 cannot support *e*•MMC with 8-bit bus width.
  - if SDMMC2 has to support *e*•MMC with 8-bit bus width, SDMMC1 supports only SDIO default mode and high-speed mode.

3.56 Controller area network (FDCAN)

The controller area network (CAN) subsystem consists of one CAN module, a shared message RAM memory and a configuration block.

The modules (FDCAN) are compliant with ISO 11898-1: 2015 (CAN protocol specification version 2.0 part A, B) and CAN FD protocol specification version 1.0.

A 0.8-Kbyte message RAM implements filters, receives FIFOs, transmits event FIFOs and transmits FIFOs.

The FDCAN main features are:

- Conform with CAN protocol version 2.0 part A, B and ISO 11898-1: 2015, -4
- CAN FD with maximum 64 data bytes supported
- CAN error logging
- AUTOSAR and J1939 support
- Improved acceptance filtering
- 2 receive FIFOs of three payloads each (up to 64 bytes per payload)
- Separate signaling on reception of high priority messages
- Configurable transmit FIFO / queue of three payload (up to 64 bytes per payload)
- Configurable transmit Event FIFO
- Programmable loop-back test mode
- Maskable module interrupts
- Two clock domains: APB bus interface and CAN core kernel clock

- Power-down support

3.57 USB on-the-go high-speed (OTG_HS)

The devices embed an USB OTG high-speed device/host/OTG peripheral with integrated transceivers. The USB OTG_HS peripheral is compliant with the USB 2.0 specification and with the OTG 2.0 specification. It has software-configurable endpoint setting and supports suspend/resume.

This interface requires a precise 60 MHz clock that is generated from the internal USB PHY PLL (the clock source must use a HSE crystal oscillator).

The OTG_HS features are:

- USB-IF certified to the Universal Serial Bus Specification Rev 2.0
- On-chip high-speed PHY
- Full support (PHY) for the optional OTG (on-the-go) protocol detailed in the OTG Supplement Rev 2.0 specification
  - Integrated support for A-B device identification (ID line)
  - Integrated support for host negotiation protocol (HNP) and session request protocol (SRP)
  - Allows host to turn V_{BUS} off to conserve battery power in OTG applications
  - Supports OTG monitoring of V_{BUS} levels with internal comparators
  - Supports dynamic host-peripheral switch of role
- Software-configurable to operate as:
  - SRP capable USB HS/FS peripheral (B-device)
  - SRP capable USB HS/FS/LS host (A-device)
  - USB on-the-go high-speed dual role device
- Supports HS/FS SOF and LS keep-alives with
  - SOF pulse PAD connectivity
  - SOF pulse internal connection to timer (TIMx)
  - Configurable framing period
  - Configurable end of frame interrupt
- USB 2.0 link power management (LPM) support
- Internal DMA with thresholding support and software selectable AHB burst type in DMA mode
- Power saving features such as system stop during USB suspend, switch-off of clock domains internal to the digital core, PHY and DFIFO power management
- Dedicated RAM of 4 Kbytes with advanced FIFO control:
  - Configurable partitioning of RAM space into different FIFOs for flexible and efficient use of RAM
  - Each FIFO able to hold multiple packets
  - Dynamic memory allocation
  - Configurable FIFO sizes that are not powers of two to allow the use of contiguous memory locations
- Max guaranteed USB bandwidth for up to one frame (1 ms) without system intervention

- Support of charging port detection as described in *Battery Charging Specification* revision 1.2

Host-mode features:

- External charge pump for VBUS voltage generation
- Up to 16 host channels (pipes): each channel is dynamically reconfigurable to allocate any type of USB transfer
- Built-in hardware scheduler holding:
  - Up to 16 interrupt plus isochronous transfer requests in the periodic hardware queue
  - Up to 16 control plus bulk transfer requests in the non-periodic hardware queue
- Management of a shared Rx FIFO, a periodic Tx FIFO and a non periodic Tx FIFO for efficient usage of the USB data RAM

Peripheral-mode features:

- 1 bidirectional control endpoint0
- 8 IN endpoints (EPs) configurable to support bulk, interrupt or isochronous transfers
- 8 OUT endpoints configurable to support bulk, interrupt or isochronous transfers
- Management of a shared Rx FIFO and a Tx-OUT FIFO for efficient usage of the USB data RAM
- Management of up to 9 dedicated Tx-IN FIFOs (one for each active IN EP) to put less load on the application
- Support for the soft disconnect feature

3.58 USB Type-C /USB Power Delivery controller (UCPD)

The device embeds one controller (UCPD) compliant with USB Type-C Cable and Connector Specification release 2.0 and USB Power Delivery Rev. 3.0 specifications.

The controller uses specific I/Os supporting the USB Type-C and USB power delivery requirements, featuring:

- USB Type-C pull-up (Rp, all values) and pull-down (Rd) resistors
- “Dead battery” support
- USB power delivery message transmission and reception
- FRS (fast role swap) support

The digital controller handles notably:

- USB Type-C level detection with debounce, generating interrupts
- FRS detection, generating an interrupt
- Byte-level interface for USB power delivery payload, generating interrupts (DMA compatible)
- USB power delivery timing dividers (including a clock prescaler)
- CRC generation/checking
- 4b5b encode/decode
- Ordered sets (with a programmable ordered set mask at receive)
- Frequency recovery in receiver during preamble

The interface offers low-power operation compatible with Stop mode, maintaining the capacity to detect incoming USB power delivery messages and FRS signaling.

3.59 Development support

3.59.1 Serial-wire/JTAG debug port (SWJ-DP)

The Arm SWJ-DP interface is embedded and is a combined JTAG and serial-wire debug port that enables either a serial wire debug or a JTAG probe to be connected to the target.

Debug is performed using two pins only instead of five required by the JTAG (JTAG pins can be re-used as GPIO with alternate function): the JTAG TMS and TCK pins are shared with SWDIO and SWCLK, respectively, and a specific sequence on the TMS pin is used to switch between JTAG-DP and SW-DP.

3.59.2 Embedded Trace Macrocell

The Arm Embedded Trace Macrocell (ETM) provides a greater visibility of the instruction and data flow inside the CPU core by streaming compressed data at a very high rate from the devices through a small number of ETM pins to an external hardware trace port analyzer (TPA) device.

Real-time instruction and data flow activity be recorded and then formatted for display on the host computer that runs the debugger software. TPA hardware is commercially available from common development tool vendors.

The ETM operates with third party debugger software tools.

4 Pinout, pin description and alternate functions

4.1 Pinout/ballout schematics

Figure 6. LQFP100_SMPS pinout

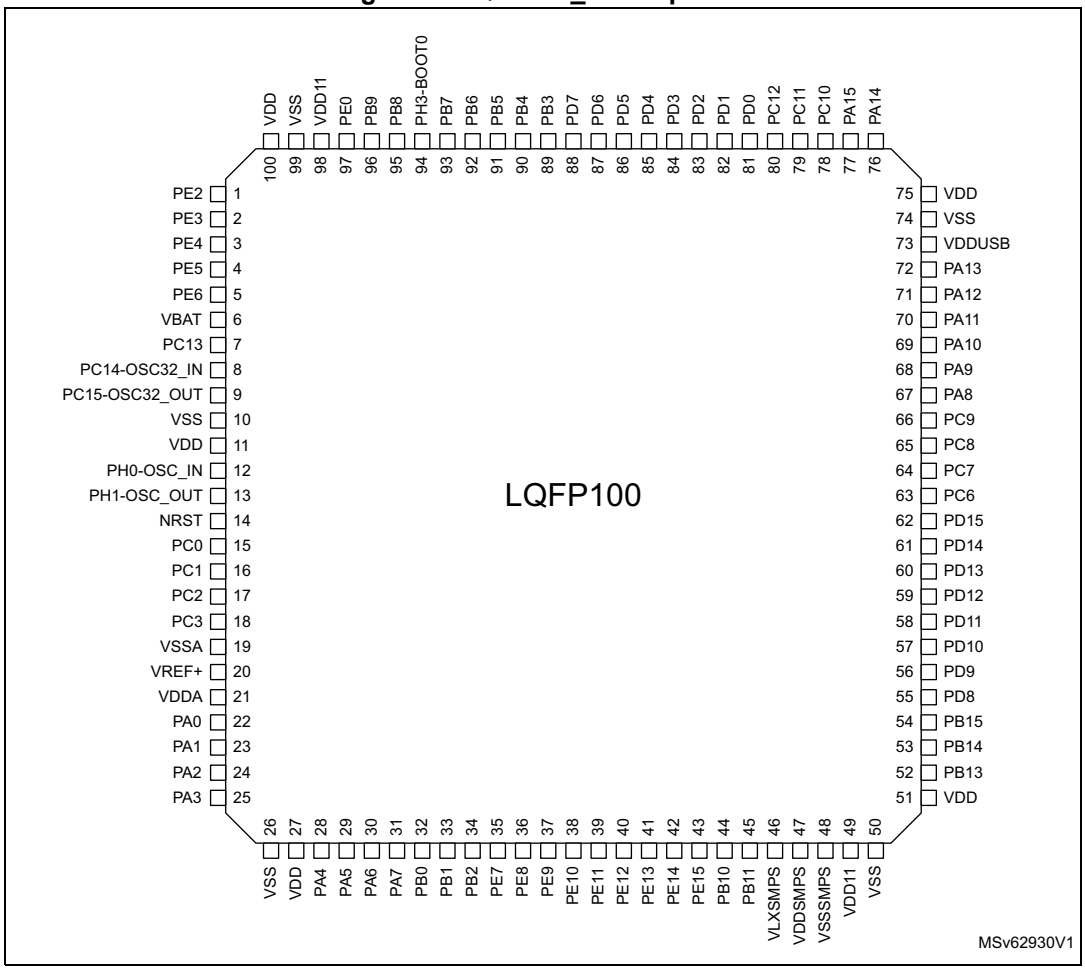

1. The above figure shows the package top view.

Figure 7. LQFP100 pinout

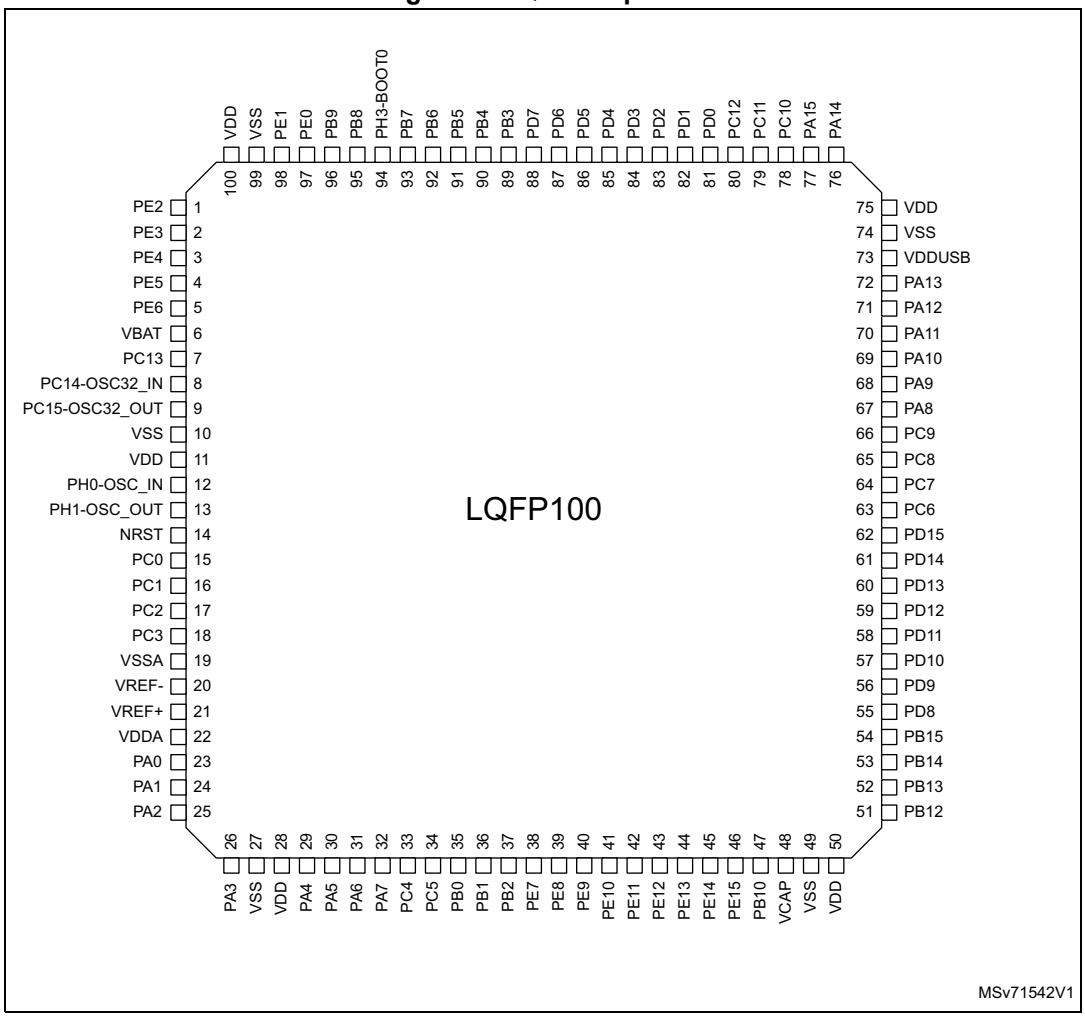

1. The above figure shows the package top view.

Figure 8. LQFP100_DSI_SMPS pinout

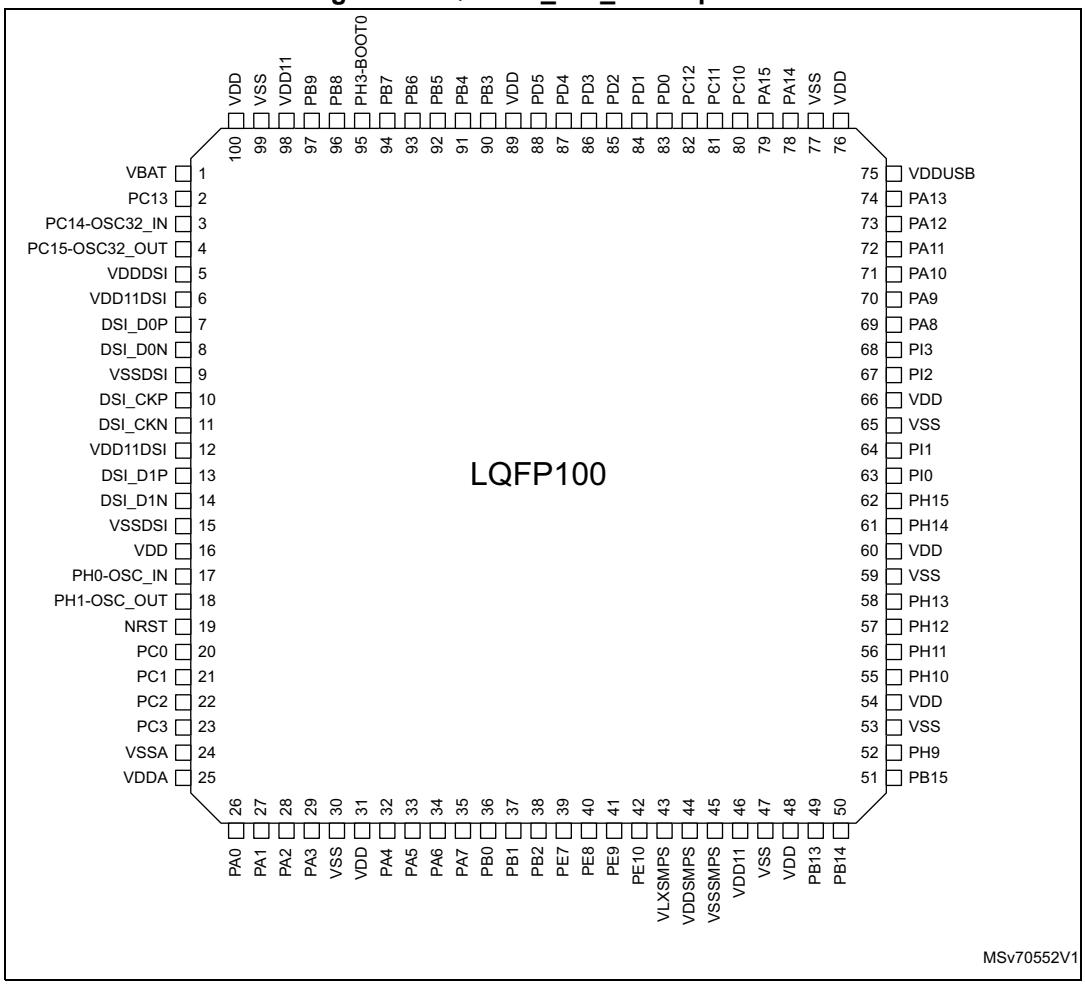

1. The above figure shows the package top view.

Figure 9. LQFP144_DSI_SMPS pinout

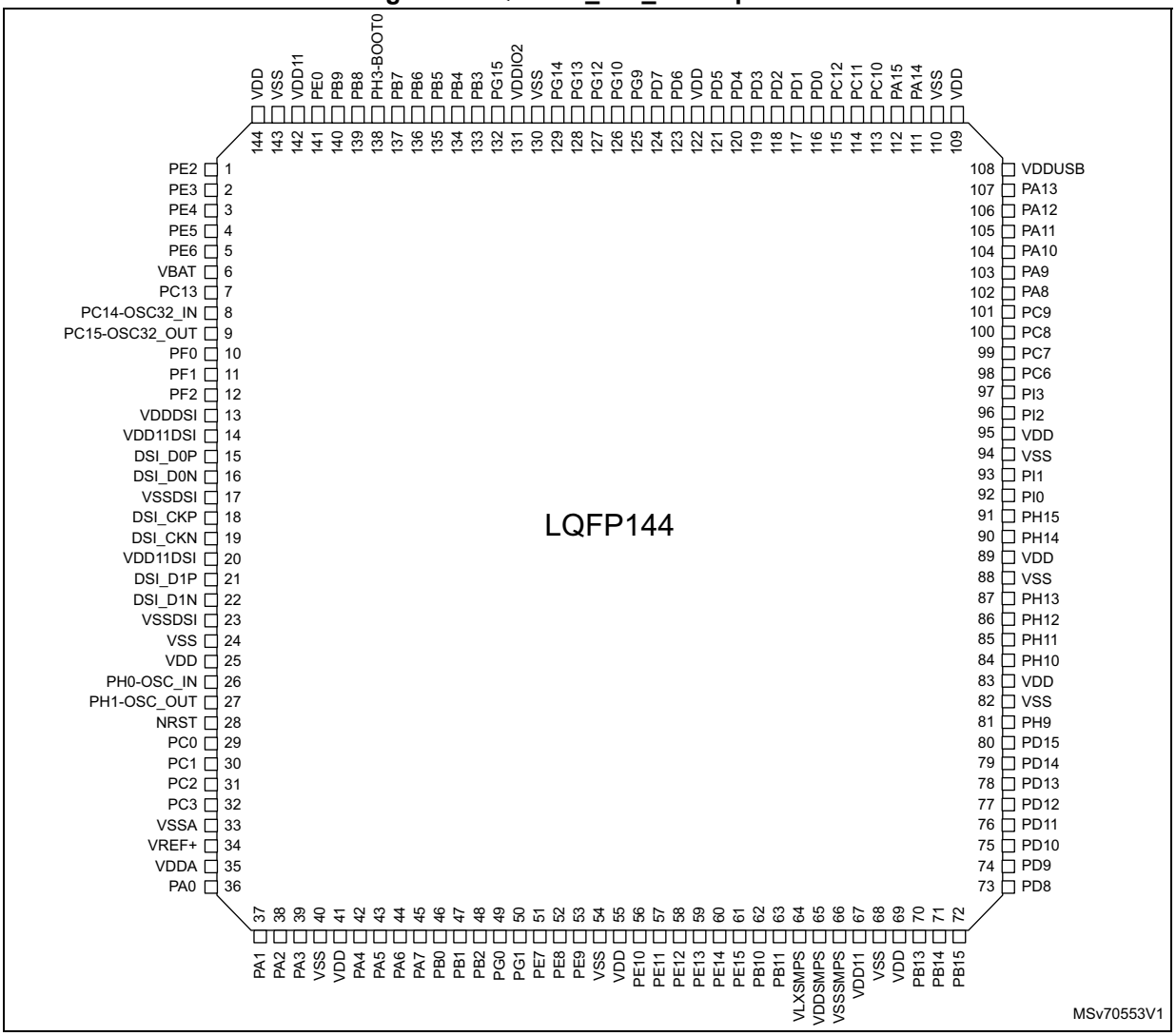

1. The above figure shows the package top view.

Figure 10. UFBGA144_DSI_SMPS ballout

	1	2	3	4	5	6	7	8	9	10	11	12
A	VSS	PB9	PH3-BOOT0	PB6	PB4	PG14	PG12	PG10	PD7	PD3	PC12	VSS
B	PE2	PE3	PE0	PB8	PB5	PG15	PG9	PD5	PD2	PC10	PA14	PA10
C	PC14-OSC32_IN	VBAT	PE4	PE5	PB7	PG13	PD4	PC11	PA15	PA13	PA12	PA11
D	VSSDSI	PC15-OSC32_OUT	PE6	VDD11	VSS	PB3	PD6	PD0	VSS	VDDUSB	PA8	PC8
E	DSI_D0N	DSI_D0P	VDDDSI	PC13	PF0	VDDIO2	PD1	VDD	PA9	VDD	PI2	PI3
F	DSI_CKN	DSI_CKP	VSSDSI	PF1	VDD	VSS	VSS	PC9	PC7	VSS	PI0	PI1
G	DSI_D1N	DSI_D1P	VDD11 DSI	PF2	PC2	VSS	VSS	VDD	PC6	VDD	PH14	PH15
H	VSSDSI	PH0-OSC_IN	VREF+	PA0	VDD	PB2	VDD	PE8	PD15	VSS	PH12	PH13
J	PH1-OSC_OUT	NRST	VSSA	VDDA	PB0	PG1	PE10	PE12	VDD11	VDD	PH11	PH10
K	PC1	PC0	PA1	PA5	PG0	PE9	PE14	PB10	PD13	PD9	PD12	PH9
L	PC3	PA2	PA4	PA7	PE7	PE13	PB11	VSS SMPS	PD11	PB14	PD10	PD14
M	VSS	PA3	PA6	PB1	PE11	PE15	VLX SMPS	VDD SMPS	PB15	PB13	PD8	VSS

MSv70554V1

1. The above figure shows the package top view.

Figure 11. WLCSP208_DSI_SMPS ballout

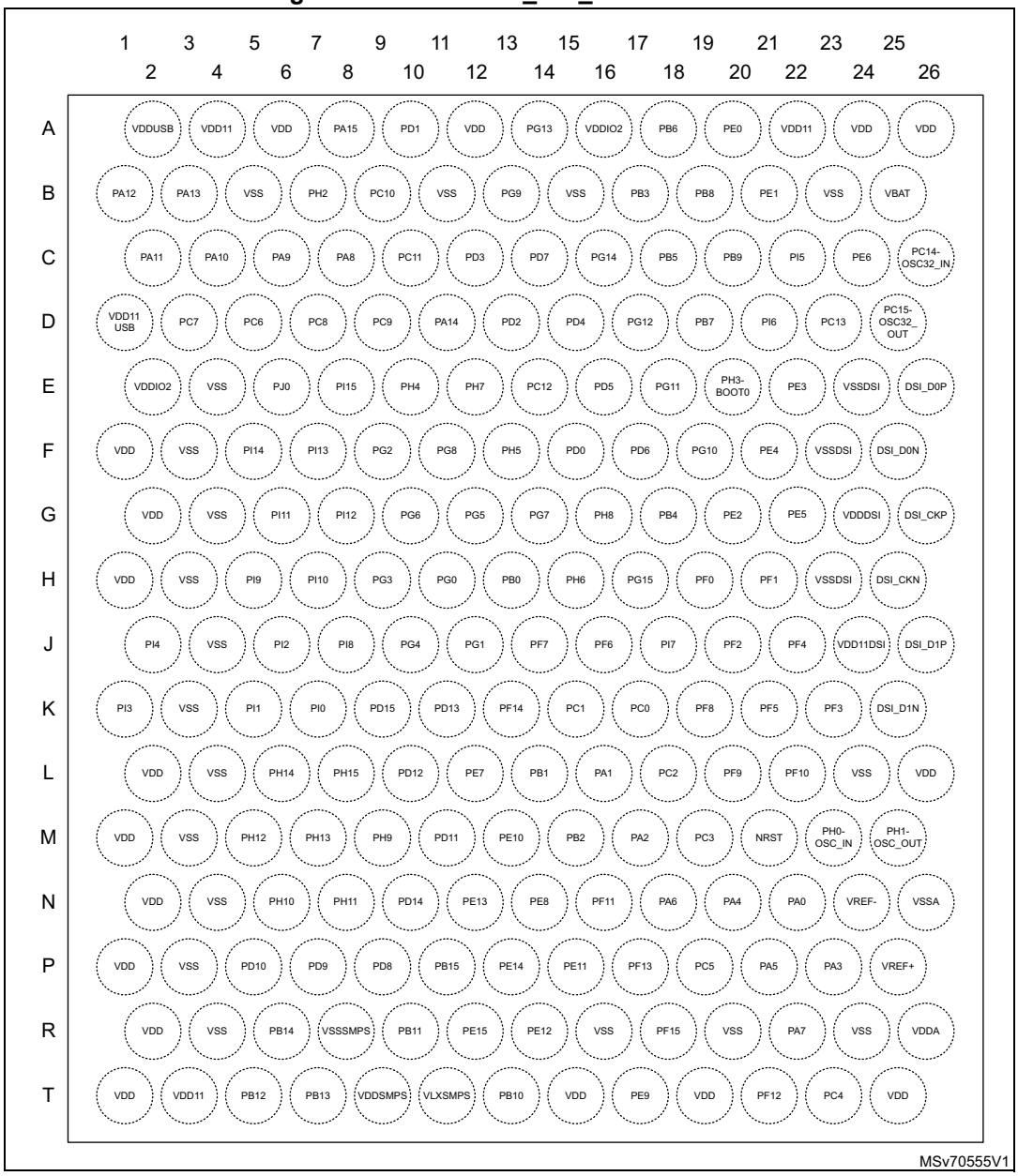

1. The above figure shows the package top view.

Figure 12. TFBGA216_DSI_SMPS ballout

	1	2	3	4	5	6	7	8	9	10	11	12	13	14	15
A	VSS	PE0	PB7	PB6	PG15	PG12	PG9	PD4	PD3	PC10	PA15	PA14	PA8	PC8	VSS
B	PC14-OSC32_IN	PE4	PE1	PH3-BOOT0	PB5	PG13	PG10	PD5	PD2	PC11	PH7	PH5	PA12	PA11	PC7
C	PC15-OSC32_OUT	VBAT	PE3	PI5	PB9	PB8	PG11	PD6	PD1	PC12	PH6	PH4	PA13	PC9	PC6
D	PJ3	PJ2	PE5	PI7	PI6	PB4	PG14	PD7	PD0	PH8	PH2	PA10	PG7	PG6	PG3
E	PJ7	PJ6	PJ4	PE6	PE2	VDD11	PB3	VDDIO2	VDDUSB	VSS	VDD11	PA9	PG8	PG5	PJ0
F	PJ10	PJ8	PJ5	PC13	VDD	VSS	VSS	VDD	VSS	VSS	VDD11 USB	PG4	PI15	PI14	PI13
G	DSI_D0P	DSI_D0N	PJ11	PJ1	VDDDSI	VSSDSI				VSS	VDDIO2	PG2	PI12	PI11	PI10
H	DSI_CKP	VSSDSI	PF0	PJ9	VDD11 DSI	VSSDSI				VSS	VDD	PI9	PI8	PI4	VSS
J	DSI_CKN	VSSDSI	PF2	PF1	VDD	VSS				VSS	VDD	PI1	PI2	PI3	VSS
K	DSI_D1N	DSI_D1P	PF4	PF3	VREF-	VSSA	VSS	VSS	VSS	VSS	VDD	PD15	PH14	PH15	PI0
L	PF10	PF5	PF7	PF9	VREF+	VDDA	VDD	VDD	VDD	VSS	VDD	PD11	PH10	PH11	PH13
M	PC1	PF6	PF8	PA2	PA4	PB1	PF13	PE8	PE13	PB11	PB12	PB13	PD12	PH9	PH12
N	PH0-OSC_IN	PH1-OSC_OUT	PC3	PA0	OPAMP2_VINM	PB0	PF12	PG1	PE7	PE15	PE12	PB10	PD8	PD13	PD14
P	PC2	PC0	PA1	PA3	PA6	PC5	PF11	PF15	PE9	PE10	PE11	VSS SMPS	PB14	PD10	PD9
R	VSS	NRST	OPAMP1_VINM	PA5	PA7	PC4	PB2	PF14	PG0	PE14	VLX SMPS	VDD SMPS	VDD11	PB15	VSS

MSv70556V1

1. The above figure shows the package top view.

4.2 Pin description

Table 26. Legend/abbreviations used in the pinout table

Name		Abbreviation	Definition
Pin name		Unless otherwise specified in brackets below the pin name, the pin function during and after reset is the same as the actual pin name	
Pin type		S	Supply pin
		I	Input only pin
		I/O	Input/output pin
I/O structure		FT	5V-tolerant I/O
		TT	3.6V-tolerant I/O
		DSI	1.2 V I/O for DSI interface
		RST	Bidirectional reset pin with embedded weak pull-up resistor
		Option for TT or FT I/Os(1)	
		_a	I/O, with analog switch function supplied by V_{DDA}
		_c	I/O with USB Type-C power delivery function
		_d	I/O with USB Type-C power delivery dead battery function
		_f	I/O, Fm+ capable
		_h	I/O with high-speed low-voltage mode
		_o	I/O with OSC32_IN/OSC32_OUT capability
		_p	I/O with differential clock capability CLKP/CLKN
		_s	I/O supplied only by V_{DDIO2}
		_t	I/O with a function supplied by V_{SW}
		_u	I/O with USB function supplied by V_{DDUSB}
		_v	I/O very high-speed capable
Notes		Unless otherwise specified by a note, all I/Os are set as analog inputs during and after reset.	
Pin functions	Alternate functions	Functions selected through GPIOx_AFR registers	
	Additional functions	Functions directly selected/enabled through peripheral registers	

1. The related I/O structures in the table below are a concatenation of various options. Examples: FT_hat, FT_fs, FT_u, TT_a.

Table 27. STM32U5Gxxx pin/ball definitions(1)

Pin number							Pin name (function after reset)	Pin type	I/O structure	Notes	Alternate functions	Additional functions
LQFP100	LQFP100 SMPS	LQFP100 DSI SMPS	LQFP144 DSI SMPS	UFBGA144 DSI SMPS	WLCSP208 DSI SMPS	TFBGA216 DSI SMPS						
1	1	-	1	B1	G20	E5	PE2	I/O	FT_ha	-	TRACECLK, TIM3_ETR, SAI1_CK1, USART6_CK, LCD_R0, TSC_G7_IO1, LPGPIO1_P14, FMC_A23, SAI1_MCLK_A, EVENTOUT	-
2	2	-	2	B2	E22	C3	PE3	I/O	FT_hat	-	TRACED0, TIM3_CH1, OCTOSPIM_P1_DQS, USART6_CTS, LCD_R1, TSC_G7_IO2, LPGPIO1_P15, FMC_A19, SAI1_SD_B, EVENTOUT	TAMP_IN6/TAMP_OUT3
3	3	-	3	C3	F21	B2	PE4	I/O	FT_hat	-	TRACED1, TIM3_CH2, SAI1_D2, MDF1_SDI3, USART6_RTS/USART6_DE, LCD_B0, TSC_G7_IO3, DCMI_D4/PSSI_D4, FMC_A20, SAI1_FS_A, EVENTOUT	WKUP1, TAMP_IN7/TAMP_OUT8
4	4	-	4	C4	G22	D3	PE5	I/O	FT_hat	-	TRACED2, TIM3_CH3, SAI1_CK2, MDF1_CKI3, LCD_G0, TSC_G7_IO4, DCMI_D6/PSSI_D6, FMC_A21, SAI1_SCK_A, EVENTOUT	WKUP2, TAMP_IN8/TAMP_OUT7
5	5	-	5	D3	C24	E4	PE6	I/O	FT_ht	-	TRACED3, TIM3_CH4, SAI1_D1, LCD_G1, DCMI_D7/PSSI_D7, FMC_A22, SAI1_SD_A, EVENTOUT	WKUP3, TAMP_IN3/TAMP_OUT6
6	6	1	6	C2	B25	C2	VBAT	S	-	-	-	-
-	-	-	-	-	-	A1	VSS	S	-	-	-	-
7	7	2	7	E4	D23	F4	PC13	I/O	FT	(2) (3)	EVENTOUT	WKUP2, RTC_TS/RTC_OUT1, TAMP_IN1/TAMP_OUT2

Table 27. STM32U5Gxxx pin/ball definitions[1] (continued)

Pin number							Pin name (function after reset)	Pin type	I/O structure	Notes	Alternate functions	Additional functions
LQFP100	LQFP100 SMPS	LQFP100 DSI SMPS	LQFP144 DSI SMPS	UFBGA144 DSI SMPS	WLCSP208 DSI SMPS	TFBGA216 DSI SMPS						
8	8	3	8	C1	C26	B1	PC14-OSC32_IN (PC14)	I/O	FT_o	(2) (3)	EVENTOUT	OSC32_IN
9	9	4	9	D2	D25	C1	PC15-OSC32_OUT (PC15)	I/O	FT_o	(2) (3)	EVENTOUT	OSC32_OUT
-	-	-	-	-	-	G4	PJ1	I/O	FT_fhv	-	I2C5_SDA, EVENTOUT	-
-	-	-	-	-	-	D2	PJ2	I/O	FT_fhv	-	I2C5_SCL, EVENTOUT	-
-	-	-	-	-	-	D1	PJ3	I/O	FT_hv	-	USART6_TX, EVENTOUT	-
-	-	-	-	-	-	E3	PJ4	I/O	FT_hv	-	USART6_RX, EVENTOUT	-
-	-	-	-	A1	B23	R1	VSS	S	-	-	-	-
-	-	-	-	E8	A24	-	VDD	S	-	-	-	-
-	-	-	-	-	-	F3	PJ5	I/O	FT_hv	-	USART6_RTS/USART6_DE, EVENTOUT	-
-	-	-	-	-	-	E2	PJ6	I/O	FT_hv	-	USART6_CK, EVENTOUT	-
-	-	-	-	-	-	E1	PJ7	I/O	FT_hv	-	USART6_CTS, EVENTOUT	-
-	-	-	-	-	-	F2	PJ8	I/O	FT_hv	-	I2C6_SMBA, EVENTOUT	-
-	-	-	-	-	-	H4	PJ9	I/O	FT_fhv	-	I2C6_SDA, EVENTOUT	-
-	-	-	-	-	-	F1	PJ10	I/O	FT_fhv	-	I2C6_SCL, EVENTOUT	-
-	-	-	-	-	-	G3	PJ11	I/O	FT_hv	-	EVENTOUT	-
-	-	-	10	E5	H19	H3	PF0	I/O	FT_fh	-	I2C6_SDA, I2C2_SDA, OCTOSPIM_P2_IO0, USART6_TX, FMC_A0, EVENTOUT	-

Table 27. STM32U5Gxxx pin/ball definitions[1] (continued)

Pin number							Pin name (function after reset)	Pin type	I/O structure	Notes	Alternate functions	Additional functions
LQFP100	LQFP100 SMPS	LQFP100 DSI SMPS	LQFP144 DSI SMPS	UFBGA144 DSI SMPS	WLCSP208 DSI SMPS	TFBGA216 DSI SMPS						
-	-	-	11	F4	H21	J4	PF1	I/O	FT_fh	-	I2C6_SCL, I2C2_SCL, OCTOSPIM_P2_IO1, USART6_RX, FMC_A1, EVENTOUT	-
-	-	-	12	G4	J20	J3	PF2	I/O	FT_h	-	LPTIM3_CH2, I2C2_SMBA, OCTOSPIM_P2_IO2, USART6_CK, FMC_A2, EVENTOUT	WKUP8
-	-	5	13	E3	G24	G5	VDDDSI	S	-	-	-	-
-	-	6	14	G3	J24	H5	VDD11DSI	S	-	-	-	-
-	-	7	15	E2	E26	G1	DSI_D0P	I/O	DSI	-	-	-
-	-	8	16	E1	F25	G2	DSI_D0N	I/O	DSI	-	-	-
-	-	9	17	D1	E24	G6	VSSDSI	S	-	-	-	-
-	-	-	-	-	H23	H6	VSSDSI	S	-	-	-	-
-	-	10	18	F2	G26	H1	DSI_CKP	I/O	DSI	-	-	-
-	-	11	19	F1	H25	J1	DSI_CKN	I/O	DSI	-	-	-
-	-	12	20	-	-	-	VDD11DSI	S	-	-	-	-
-	-	13	21	G2	J26	K2	DSI_D1P	I/O	DSI	-	-	-
-	-	14	22	G1	K25	K1	DSI_D1N	I/O	DSI	-	-	-
-	-	15	23	F3	F23	H2	VSSDSI	S	-	-	-	-
-	-	-	-	H1	-	J2	VSSDSI	S	-	-	-	-

Table 27. STM32U5Gxxx pin/ball definitions[1] (continued)

Pin number							Pin name (function after reset)	Pin type	I/O structure	Notes	Alternate functions	Additional functions
LQFP100	LQFP100 SMPS	LQFP100 DSI SMPS	LQFP144 DSI SMPS	UFBGA144 DSI SMPS	WLCSP208 DSI SMPS	TFBGA216 DSI SMPS						
-	-	-	-	-	K23	K4	PF3	I/O	FT_h	-	LPTIM3_IN1, ADF1_CCK0, OCTOSPIM_P2_IO3, MDF1_CCK0, USART6_CTS, UART5_TX, FMC_A3, EVENTOUT	-
-	-	-	-	-	J22	K3	PF4	I/O	FT_hvp	-	LPTIM3_ETR, ADF1_SDI0, OCTOSPIM_P2_CLK, MDF1_SDI0, USART6_RTS/USART6_DE, UART5_RX, FMC_A4, EVENTOUT	-
-	-	-	-	-	K21	L2	PF5	I/O	FT_hvp	-	LPTIM3_CH1, OCTOSPIM_P2_NCLK, MDF1_CKI0, FMC_A5, EVENTOUT	-
10	10	-	24	A12	L24	A15	VSS	S	-	-	-	-
11	11	16	25	F5	L26	F5	VDD	S	-	-	-	-
-	-	-	-	-	J16	M2	PF6	I/O	FT_h	-	TIM5_ETR, TIM5_CH1, DCMI_D12/PSSI_D12, OCTOSPIM_P2_NCS, OCTOSPIM_P1_IO3, SAI1_SD_B, EVENTOUT	-
-	-	-	-	-	J14	L3	PF7	I/O	FT_h	(4)	TIM5_CH2, FDCAN1_RX, OCTOSPIM_P1_IO2, SAI1_MCLK_B, EVENTOUT	-
-	-	-	-	-	K19	M3	PF8	I/O	FT_h	(4)	TIM5_CH3, PSSI_D14, FDCAN1_TX, OCTOSPIM_P1_IO0, SAI1_SCK_B, EVENTOUT	-
-	-	-	-	-	L20	L4	PF9	I/O	FT_h	-	TIM5_CH4, PSSI_D15, OCTOSPIM_P1_IO1, SAI1_FS_B, TIM15_CH1, EVENTOUT	-

Table 27. STM32U5Gxxx pin/ball definitions[1] (continued)

Pin number							Pin name (function after reset)	Pin type	I/O structure	Notes	Alternate functions	Additional functions
LQFP100	LQFP100 SMPS	LQFP100 DSI SMPS	LQFP144 DSI SMPS	UFBGA144 DSI SMPS	WLCSP208 DSI SMPS	TFBGA216 DSI SMPS						
-	-	-	-	-	L22	L1	PF10	I/O	FT_hv	-	OCTOSPIM_P1_CLK, PSSI_D15, MDF1_CCK1, DCMI_D11/PSSI_D11, GFXTIM_TE/DSI_TE, SAI1_D3, TIM15_CH2, EVENTOUT	-
12	12	17	26	H2	M23	N1	PH0-OSC_IN (PH0)	I/O	FT	-	EVENTOUT	OSC_IN
13	13	18	27	J1	M25	N2	PH1-OSC_OUT (PH1)	I/O	FT	-	EVENTOUT	OSC_OUT
14	14	19	28	J2	M21	R2	NRST	I-O	RST	-	-	-
15	15	20	29	K2	K17	P2	PC0	I/O	FT_fha	-	LPTIM1_IN1, GFXTIM_FCKCAL, OCTOSPIM_P1_IO7, I2C3_SCL(boot), SPI2_RDY, MDF1_SDI4, USART6_CTS, LPUART1_RX, GFXTIM_LCKCAL, SDMMC1_D5, SAI2_FS_A, LPTIM2_IN1, EVENTOUT	ADC1_IN1, ADC2_IN1, ADC4_IN1
16	16	21	30	K1	K15	M1	PC1	I/O	FT_ fhav	-	TRACED0, LPTIM1_CH1, SPI2_MOSI, I2C3_SDA(boot), MDF1_CKI4, USART6_CK, LPUART1_TX, OCTOSPIM_P1_IO4, SDMMC2_CK, SAI1_SD_A, EVENTOUT	ADC1_IN2, ADC2_IN2, ADC4_IN2
17	17	22	31	G5	L18	P1	PC2	I/O	FT_ha	-	LPTIM1_IN2, SPI2_MISO, MDF1_CCK1, USART6_RX, OCTOSPIM_P1_IO5, LPGPIO1_P5, EVENTOUT	ADC1_IN3, ADC2_IN3, ADC4_IN3
18	18	23	32	L1	M19	N3	PC3	I/O	FT_ha	-	LPTIM1_ETR, LPTIM3_CH1, SAI1_D1, SPI2_MOSI, USART6_TX, OCTOSPIM_P1_IO6, SAI1_SD_A, LPTIM2_ETR, EVENTOUT	ADC1_IN4, ADC2_IN4, ADC4_IN4
19	19	24	33	J3	N26	K6	VSSA	S	-	-	-	-

Table 27. STM32U5Gxxx pin/ball definitions[1] (continued)

Pin number							Pin name (function after reset)	Pin type	I/O structure	Notes	Alternate functions	Additional functions
LQFP100	LQFP100 SMPS	LQFP100 DSI SMPS	LQFP144 DSI SMPS	UFBGA144 DSI SMPS	WLCSP208 DSI SMPS	TFBGA216 DSI SMPS						
20	-	-	-	-	N24	K5	VREF-	S	-	-	-	-
21	20	-	34	H3	P25	L5	VREF+	S	-	-	-	VREFBUF_OUT
22	21	25	35	J4	R26	L6	VDDA	S	-	-	-	-
23	22	26	36	H4	N22	N4	PA0	I/O	FT_hat	-	TIM2_CH1, TIM5_CH1, TIM8_ETR, SPI3_RDY, USART2_CTS, UART4_TX, OCTOSPIM_P2_NCS, SDMMC2_CMD, AUDIOCLK, TIM2_ETR, EVENTOUT	OPAMP1_VINP, ADC1_IN5, ADC2_IN5, WKUP1, TAMP_IN2/TAMP_OUT1
-	-	-	-	-	-	R3	OPAMP1_VINM	I	TT	-	-	-
24	23	27	37	K3	L16	P3	PA1	I/O	FT_hat	-	LPTIM1_CH2, TIM2_CH2, TIM5_CH2, I2C1_SMBA, SPI1_SCK, USART2_RTS/USART2_DE, UART4_RX, OCTOSPIM_P1_DQS, LPGPIO1_P0, TIM15_CH1N, EVENTOUT	OPAMP1_VINM, ADC1_IN6, ADC2_IN6, WKUP3, TAMP_IN5/TAMP_OUT4
25	24	28	38	L2	M17	M4	PA2	I/O	FT_ha	-	TIM2_CH3, TIM5_CH3, SPI1_RDY, USART2_TX(boot), LPUART1_TX, OCTOSPIM_P1_NCS, UCPD1_FRSTX1, TIM15_CH1, EVENTOUT	COMP1_INP3, ADC1_IN7, ADC2_IN7, WKUP4/LSCO
26	25	29	39	M2	P23	P4	PA3	I/O	TT_hav	-	TIM2_CH4, TIM5_CH4, SAI1_CK1, USART2_RX(boot), LPUART1_RX, OCTOSPIM_P1_CLK, LPGPIO1_P1, SAI1_MCLK_A, TIM15_CH2, EVENTOUT	OPAMP1_VOUT, ADC1_IN8, ADC2_IN8, WKUP5
27	26	30	40	D5	R24	E10	VSS	S	-	-	-	-
28	27	31	41	G8	T25	F8	VDD	S	-	-	-	-

Table 27. STM32U5Gxxx pin/ball definitions[1] (continued)

Pin number							Pin name (function after reset)	Pin type	I/O structure	Notes	Alternate functions	Additional functions
LQFP100	LQFP100 SMPS	LQFP100 DSI SMPS	LQFP144 DSI SMPS	UFBGA144 DSI SMPS	WLCSP208 DSI SMPS	TFBGA216 DSI SMPS						
29	28	32	42	L3	N20	M5	PA4	I/O	TT_ha	-	OCTOSPIM_P1_NCS, SPI1_NSS(boot), SPI3_NSS, USART2_CK, DCMI_HSYNC/PSSI_DE, SAI1_FS_B, LPTIM2_CH1, EVENTOUT	ADC1_IN9, ADC2_IN9, ADC4_IN9, DAC1_OUT1, WKUP2
30	29	33	43	K4	P21	R4	PA5	I/O	TT_a	-	CSLEEP, TIM2_CH1, TIM2_ETR, TIM8_CH1N, PSSI_D14, SPI1_SCK(boot), USART3_RX, LPTIM2_ETR, EVENTOUT	ADC1_IN10, ADC2_IN10, ADC4_IN10, DAC1_OUT2, WKUP6
31	30	34	44	M3	N18	P5	PA6	I/O	FT_ha	-	CDSTOP, TIM1_BKIN, TIM3_CH1, TIM8_BKIN, DCMI_PIXCLK/PSSI_PDCK, SPI1_MISO(boot), USART3_CTS, LPUART1_CTS, OCTOSPIM_P1_IO3, LPGPIO1_P2, TIM16_CH1, EVENTOUT	OPAMP2_VINP, ADC1_IN11, ADC2_IN11, ADC4_IN11, WKUP7
-	-	-	-	-	-	N5	OPAMP2_VINM	I	TT	-	-	-
32	31	35	45	L4	R22	R5	PA7	I/O	FT_fha	-	SRDSTOP, TIM1_CH1N, TIM3_CH2, TIM8_CH1N, I2C3_SCL, SPI1_MOSI(boot), USART3_TX, OCTOSPIM_P1_IO2, LPTIM2_CH2, TIM17_CH1, EVENTOUT	OPAMP2_VINM, ADC1_IN12, ADC2_IN12, ADC4_IN20, WKUP8
33	-	-	-	-	T23	R6	PC4	I/O	FT_ha	-	I2C6_SMBA, USART3_TX, OCTOSPIM_P1_IO7, EVENTOUT	COMP1_INM2, ADC1_IN13, ADC2_IN13, ADC4_IN22
34	-	-	-	-	P19	P6	PC5	I/O	FT_at	-	TIM1_CH4N, SAI1_D3, PSSI_D15, USART3_RX, EVENTOUT	COMP1_INP1, ADC1_IN14, ADC2_IN14, ADC4_IN23, WKUP5, TAMP_IN4/TAMP_OUT5

Table 27. STM32U5Gxxx pin/ball definitions[1] (continued)

Pin number							Pin name (function after reset)	Pin type	I/O structure	Notes	Alternate functions	Additional functions
LQFP100	LQFP100 SMPS	LQFP100 DSI SMPS	LQFP144 DSI SMPS	UFBGA144 DSI SMPS	WLCSP208 DSI SMPS	TFBGA216 DSI SMPS						
35	32	36	46	J5	H13	N6	PB0	I/O	TT_ha	-	TIM1_CH2N, TIM3_CH3, TIM8_CH2N, LPTIM3_CH1, SPI1_NSS, USART3_CK, OCTOSPIM_P1_IO1, LPGPIO1_P9, COMP1_OUT, AUDIOCLK, EVENTOUT	OPAMP2_VOUT, ADC1_IN15, ADC2_IN15, ADC4_IN18
36	33	37	47	M4	L14	M6	PB1	I/O	FT_ha	-	TIM1_CH3N, TIM3_CH4, TIM8_CH3N, LPTIM3_CH2, MDF1_SDI0, USART3_RTS/USART3_DE, LPUART1_RTS/LPUART1_DE, OCTOSPIM_P1_IO0, LPGPIO1_P3, LPTIM2_IN1, EVENTOUT	COMP1_INM1, ADC1_IN16, ADC2_IN16, ADC4_IN19, WKUP4
37	34	38	48	H6	M15	R7	PB2	I/O	FT_ha	-	LPTIM1_CH1, TIM8_CH4N, I2C3_SMBA, SPI1_RDY, MDF1_CKI0, LCD_B1, OCTOSPIM_P1_DQS, UCPD1_FRSTX1, EVENTOUT	COMP1_INP2, ADC1_IN17, ADC2_IN17, WKUP1, RTC_OUT2
-	-	-	-	-	N16	P7	PF11	I/O	FT_hv	-	OCTOSPIM_P1_NCLK, LCD_DE, DCMI_D12/PSSI_D12, GFXTIM_TE/DSI_TE, LPTIM4_IN1, EVENTOUT	-
-	-	-	-	-	T21	N7	PF12	I/O	FT_h	-	OCTOSPIM_P2_DQS, LCD_B0, FMC_A6, LPTIM4_ETR, EVENTOUT	-
-	-	-	-	F6	R20	F10	VSS	S	-	-	-	-
-	-	-	-	H5	T19	J5	VDD	S	-	-	-	-
-	-	-	-	-	P17	M7	PF13	I/O	FT_h	-	I2C4_SMBA, LCD_B1, UCPD1_FRSTX2, FMC_A7, LPTIM4_OUT, EVENTOUT	-
-	-	-	-	-	K13	R8	PF14	I/O	FT_fha	-	I2C4_SCL, LCD_G0, TSC_G8_IO1, FMC_A8, EVENTOUT	ADC4_IN5

Table 27. STM32U5Gxxx pin/ball definitions[1] (continued)

Pin number							Pin name (function after reset)	Pin type	I/O structure	Notes	Alternate functions	Additional functions
LQFP100	LQFP100 SMPS	LQFP100 DSI SMPS	LQFP144 DSI SMPS	UFBGA144 DSI SMPS	WLCSP208 DSI SMPS	TFBGA216 DSI SMPS						
-	-	-	-	-	R18	P8	PF15	I/O	FT_fha	-	I2C4_SDA, LCD_G1, TSC_G8_IO2, FMC_A9, EVENTOUT	ADC4_IN6
-	-	-	49	K5	H11	R9	PG0	I/O	FT_ha	-	OCTOSPIM_P2_IO4, TSC_G8_IO3, FMC_A10, EVENTOUT	ADC4_IN7
-	-	-	50	J6	J12	N8	PG1	I/O	FT_ha	-	OCTOSPIM_P2_IO5, TSC_G8_IO4, FMC_A11, EVENTOUT	ADC4_IN8
38	35	39	51	L5	L12	N9	PE7	I/O	FT_h	-	TIM1_ETR, MDF1_SDI2, LCD_B6, FMC_D4/FMC_AD4, SAI1_SD_B, EVENTOUT	WKUP6
39	36	40	52	H8	N14	M8	PE8	I/O	FT_h	-	TIM1_CH1N, MDF1_CKI2, LCD_B7, FMC_D5/FMC_AD5, SAI1_SCK_B, EVENTOUT	WKUP7
40	37	41	53	K6	T17	P9	PE9	I/O	FT_hv	-	TIM1_CH1, ADF1_CCK0, MDF1_CCK0, LCD_G2, OCTOSPIM_P1_NCLK, FMC_D6/FMC_AD6, SAI1_FS_B, EVENTOUT	-
-	-	-	54	F7	R16	F6	VSS	S	-	-	-	-
-	-	-	55	H7	T15	L7	VDD	S	-	-	-	-
41	38	42	56	J7	M13	P10	PE10	I/O	FT_hav	-	TIM1_CH2N, ADF1_SDI0, MDF1_SDI4, LCD_G3, TSC_G5_IO1, OCTOSPIM_P1_CLK, FMC_D7/FMC_AD7, SAI1_MCLK_B, EVENTOUT	-

Table 27. STM32U5Gxxx pin/ball definitions[1] (continued)

Pin number							Pin name (function after reset)	Pin type	I/O structure	Notes	Alternate functions	Additional functions
LQFP100	LQFP100 SMPS	LQFP100 DSI SMPS	LQFP144 DSI SMPS	UFBGA144 DSI SMPS	WLCSP208 DSI SMPS	TFBGA216 DSI SMPS						
42	39	-	57	M5	P15	P11	PE11	I/O	FT_ha	-	TIM1_CH2, SPI1_RDY, MDF1_CKI4, LCD_G4, TSC_G5_IO2, OCTOSPIM_P1_NCS, FMC_D8/FMC_AD8, EVENTOUT	-
43	40	-	58	J8	R14	N11	PE12	I/O	FT_ha	-	TIM1_CH3N, SPI1_NSS, MDF1_SDI5, LCD_G5, TSC_G5_IO3, OCTOSPIM_P1_IO0, FMC_D9/FMC_AD9, EVENTOUT	-
44	41	-	59	L6	N12	M9	PE13	I/O	FT_ha	-	TIM1_CH3, SPI1_SCK, MDF1_CKI5, LCD_G6, TSC_G5_IO4, OCTOSPIM_P1_IO1, FMC_D10/FMC_AD10, EVENTOUT	-
45	42	-	60	K7	P13	R10	PE14	I/O	FT_h	-	TIM1_CH4, TIM1_BKIN2, SPI1_MISO, LCD_G7, OCTOSPIM_P1_IO2, FMC_D11/FMC_AD11, GFXTIM_LCKCAL, EVENTOUT	-
46	43	-	61	M6	R12	N10	PE15	I/O	FT_h	-	TIM1_BKIN, GFXTIM_LCKCAL, TIM1_CH4N, SPI1_MOSI, LCD_R2, OCTOSPIM_P1_IO3, FMC_D12/FMC_AD12, GFXTIM_FCKCAL, EVENTOUT	-
47	44	-	62	K8	T13	N12	PB10	I/O	FT_fhv	-	TIM2_CH3, LPTIM3_CH1, I2C4_SCL, I2C2_SCL(boot), SPI2_SCK, USART3_TX, LPUART1_RX, TSC_SYNC, OCTOSPIM_P1_CLK, LPGPIO1_P4, COMP1_OUT, SAI1_SCK_A, EVENTOUT	WKUP8

Table 27. STM32U5Gxxx pin/ball definitions[1] (continued)

Pin number							Pin name (function after reset)	Pin type	I/O structure	Notes	Alternate functions	Additional functions
LQFP100	LQFP100 SMPS	LQFP100 DSI SMPS	LQFP144 DSI SMPS	UFBGA144 DSI SMPS	WLCSP208 DSI SMPS	TFBGA216 DSI SMPS						
-	45	-	63	L7	R10	M10	PB11	I/O	FT_fh	-	TIM2_CH4, I2C4_SDA, I2C2_SDA(boot), SPI2_RDY, USART3_RX, LPUART1_TX, OCTOSPIM_P1_NCS, COMP2_OUT, EVENTOUT	-
-	46	43	64	M7	T11	R11	VLXSMPS	S	-	-	-	-
-	47	44	65	M8	T9	R12	VDDSMPS	S	-	-	-	-
-	48	45	66	L8	R8	P12	VSSSMPS	S	-	-	-	-
48	-	-	-	-	-	-	VCAP	S	-	-	-	-
-	49	46	67	J9	T3	R13	VDD11	S	-	-	-	-
49	50	47	68	G6	F3	F7	VSS	S	-	-	-	-
50	51	48	69	-	P1	L8	VDD	S	-	-	-	-
-	-	-	-	-	T1	-	VDD	S	-	-	-	-
51	-	-	-	-	T5	M11	PB12	I/O	FT_hav	-	TIM1_BKIN, I2C6_SMBA, I2C2_SMBA, SPI2_NSS(boot), MDF1_SDI1, USART3_CK, LPUART1_RTS/LPUART1_DE, TSC_G1_IO1, OCTOSPIM_P1_NCLK, SAI2_FS_A, TIM15_BKIN, EVENTOUT	-
52	52	49	70	M10	T7	M12	PB13	I/O	FT_fa	-	TIM1_CH1N, LPTIM3_IN1, I2C2_SCL, SPI2_SCK(boot), MDF1_CKI1, USART3_CTS, LPUART1_CTS, TSC_G1_IO2, SAI2_SCK_A, TIM15_CH1N, EVENTOUT	-

Table 27. STM32U5Gxxx pin/ball definitions[1] (continued)

Pin number							Pin name (function after reset)	Pin type	I/O structure	Notes	Alternate functions	Additional functions
LQFP100	LQFP100 SMPS	LQFP100 DSI SMPS	LQFP144 DSI SMPS	UFBGA144 DSI SMPS	WLCSP208 DSI SMPS	TFBGA216 DSI SMPS						
53	53	50	71	L10	R6	P13	PB14	I/O	FT_ fhda	-	TIM1_CH2N, LPTIM3_ETR, TIM8_CH2N, I2C2_SDA, SPI2_MISO(boot), MDF1_SDI2, USART3_RTS/USART3_DE, TSC_G1_IO3, SDMMC2_D0, SAI2_MCLK_A, TIM15_CH1, EVENTOUT	UCPD1_DBCC2
54	54	51	72	M9	P11	R14	PB15	I/O	FT_c	(5)	RTC_REFIN, TIM1_CH3N, LPTIM2_IN2, TIM8_CH3N, SPI2_MOSI(boot), MDF1_CKI2, GFXTIM_TE/DSI_TE, FMC_NBL1, SDMMC2_D1, SAI2_SD_A, TIM15_CH2, EVENTOUT	UCPD1_CC2, WKUP7
55	55	-	73	M11	P9	N13	PD8	I/O	FT_h	-	USART3_TX, LCD_R3, DCMI_HSYNC/PSSI_DE, FMC_D13/FMC_AD13, EVENTOUT	-
56	56	-	74	K10	P7	P15	PD9	I/O	FT_h	-	LPTIM2_IN2, USART3_RX, LCD_R4, DCMI_PIXCLK/PSSI_PDCK, FMC_D14/FMC_AD14, SAI2_MCLK_A, LPTIM3_IN1, EVENTOUT	-
57	57	-	75	L11	P5	P14	PD10	I/O	FT_ha	-	LPTIM2_CH2, I2C5_SMBA, USART3_CK, LCD_R5, TSC_G6_IO1, FMC_D15/FMC_AD15, SAI2_SCK_A, LPTIM3_ETR, EVENTOUT	-
58	58	-	76	L9	M11	L12	PD11	I/O	FT_ha	-	I2C4_SMBA, USART3_CTS, LCD_R6, TSC_G6_IO2, FMC_CLE/FMC_A16, SAI2_SD_A, LPTIM2_ETR, EVENTOUT	ADC4_IN15

Table 27. STM32U5Gxxx pin/ball definitions[1] (continued)

Pin number							Pin name (function after reset)	Pin type	I/O structure	Notes	Alternate functions	Additional functions
LQFP100	LQFP100 SMPS	LQFP100 DSI SMPS	LQFP144 DSI SMPS	UFBGA144 DSI SMPS	WLCSP208 DSI SMPS	TFBGA216 DSI SMPS						
59	59	-	77	K11	L10	M13	PD12	I/O	FT_fha	-	TIM4_CH1, I2C4_SCL, USART3_RTS/USART3_DE, LCD_R7, TSC_G6_IO3, FMC_ALE/FMC_A17, SAI2_FS_A, LPTIM2_IN1, EVENTOUT	ADC4_IN16
60	60	-	78	K9	K11	N14	PD13	I/O	FT_fha	-	TIM4_CH2, I2C4_SDA, GFXTIM_TE, USART6_CTS, LCD_VSYNC, TSC_G6_IO4, LPGPIO1_P6, FMC_A18, LPTIM4_IN1, LPTIM2_CH1, EVENTOUT	ADC4_IN17
-	-	-	-	G7	G4	F9	VSS	S	-	-	-	-
-	-	-	-	-	R2	L9	VDD	S	-	-	-	-
61	61	-	79	L12	N10	N15	PD14	I/O	FT_h	-	TIM4_CH3, USART6_CK, LCD_B2, FMC_D0/FMC_AD0, LPTIM3_CH1, EVENTOUT	-
62	62	-	80	H9	K9	K12	PD15	I/O	FT_h	-	TIM4_CH4, USART6_RTS/USART6_DE, LCD_B3, FMC_D1/FMC_AD1, LPTIM3_CH2, EVENTOUT	-
-	-	52	81	K12	M9	M14	PH9	I/O	FT_hv	-	I2C3_SMBA, OCTOSPIM_P2_IO4, HSPI1_NCS, DCMI_D0/PSSI_D0, EVENTOUT	-
-	-	53	82	D9	H3	J6	VSS	S	-	-	-	-
-	-	54	83	E10	F1	H11	VDD	S	-	-	-	-
-	-	55	84	J12	N6	L13	PH10	I/O	FT_hv	-	TIM5_CH1, OCTOSPIM_P2_IO5, HSPI1_IO0, DCMI_D1/PSSI_D1, EVENTOUT	-

Table 27. STM32U5Gxxx pin/ball definitions[1] (continued)

Pin number							Pin name (function after reset)	Pin type	I/O structure	Notes	Alternate functions	Additional functions
LQFP100	LQFP100 SMPS	LQFP100 DSI SMPS	LQFP144 DSI SMPS	UFBGA144 DSI SMPS	WLCSP208 DSI SMPS	TFBGA216 DSI SMPS						
-	-	56	85	J11	N8	L14	PH11	I/O	FT_hv	-	TIM5_CH2, OCTOSPIM_P2_IO6, HSPI1_IO1, DCMI_D2/PSSI_D2, EVENTOUT	-
-	-	57	86	H11	M5	M15	PH12	I/O	FT_hv	-	TIM5_CH3, TIM8_CH4N, OCTOSPIM_P2_IO7, HSPI1_IO2, DCMI_D3/PSSI_D3, EVENTOUT	-
-	-	58	87	H12	M7	L15	PH13	I/O	FT_hv	(4)	TIM8_CH1N, HSPI1_IO3, FDCAN1_TX, EVENTOUT	-
-	-	59	88	F10	J4	K10	VSS	S	-	-	-	-
-	-	60	89	G10	G2	J11	VDD	S	-	-	-	-
-	-	61	90	G11	L6	K13	PH14	I/O	FT_hv	(4)	TIM8_CH2N, HSPI1_IO4, FDCAN1_RX, DCMI_D4/PSSI_D4, EVENTOUT	-
-	-	62	91	G12	L8	K14	PH15	I/O	FT_hv	-	TIM8_CH3N, OCTOSPIM_P2_IO6, HSPI1_IO5, DCMI_D11/PSSI_D11, EVENTOUT	-
-	-	63	92	F11	K7	K15	PI0	I/O	FT_hv	-	TIM5_CH4, OCTOSPIM_P1_IO5, SPI2_NSS, HSPI1_IO6, DCMI_D13/PSSI_D13, EVENTOUT	-
-	-	64	93	F12	K5	J12	PI1	I/O	FT_hv	-	SPI2_SCK, OCTOSPIM_P2_IO2, HSPI1_IO7, DCMI_D8/PSSI_D8, EVENTOUT	-
-	-	65	94	H10	K3	K7	VSS	S	-	-	-	-
-	-	66	95	J10	H1	K11	VDD	S	-	-	-	-

Table 27. STM32U5Gxxx pin/ball definitions[1] (continued)

Pin number							Pin name (function after reset)	Pin type	I/O structure	Notes	Alternate functions	Additional functions
LQFP100	LQFP100 SMPS	LQFP100 DSI SMPS	LQFP144 DSI SMPS	UFBGA144 DSI SMPS	WLCSP208 DSI SMPS	TFBGA216 DSI SMPS						
-	-	67	96	E11	J6	J13	PI2	I/O	FT_hv	-	TIM8_CH4, SPI2_MISO, OCTOSPIM_P2_IO1, HSPI1_DQS0, DCMI_D9/PSSI_D9, EVENTOUT	-
-	-	68	97	E12	K1	J14	PI3	I/O	FT_hvp	-	TIM8_ETR, SPI2_MOSI, OCTOSPIM_P2_IO0, HSPI1_CLK, DCMI_D10/PSSI_D10, EVENTOUT	-
-	-	-	-	-	J2	H14	PI4	I/O	FT_hvp	-	TIM8_BKIN, SPI2_RDY, HSPI1_NCLK, DCMI_D5/PSSI_D5, EVENTOUT	-
-	-	-	-	-	J8	H13	PI8	I/O	FT_hv	-	HSPI1_DQS1, EVENTOUT	-
-	-	-	-	-	E4	K8	VSS	S	-	-	-	-
-	-	-	-	-	L2	L11	VDD	S	-	-	-	-
-	-	-	-	-	H5	H12	PI9	I/O	FT_hv	-	HSPI1_IO8, EVENTOUT	-
-	-	-	-	-	H7	G15	PI10	I/O	FT_hv	-	HSPI1_IO9, EVENTOUT	-
-	-	-	-	-	G6	G14	PI11	I/O	FT_hv	-	HSPI1_IO10, EVENTOUT	-
-	-	-	-	-	G8	G13	PI12	I/O	FT_hv	-	HSPI1_IO11, EVENTOUT	-
-	-	-	-	-	L4	K9	VSS	S	-	-	-	-
-	-	-	-	-	M1	-	VDD	S	-	-	-	-
-	-	-	-	-	F7	F15	PI13	I/O	FT_hv	-	HSPI1_IO12, EVENTOUT	-
-	-	-	-	-	F5	F14	PI14	I/O	FT_hv	-	HSPI1_IO13, EVENTOUT	-
-	-	-	-	-	E8	F13	PI15	I/O	FT_hv	-	HSPI1_IO14, EVENTOUT	-
-	-	-	-	-	E6	E15	PJ0	I/O	FT_hv	-	I2C5_SMBA, HSPI1_IO15, EVENTOUT	-

Table 27. STM32U5Gxxx pin/ball definitions[1] (continued)

Pin number							Pin name (function after reset)	Pin type	I/O structure	Notes	Alternate functions	Additional functions
LQFP100	LQFP100 SMPS	LQFP100 DSI SMPS	LQFP144 DSI SMPS	UFBGA144 DSI SMPS	WLCSP208 DSI SMPS	TFBGA216 DSI SMPS						
-	-	-	-	-	M3	L10	VSS	S	-	-	-	-
-	-	-	-	-	N2	-	VDD	S	-	-	-	-
-	-	-	-	-	F9	G12	PG2	I/O	FT_hs	-	SPI1_SCK, FMC_A12, SAI2_SCK_B, EVENTOUT	-
-	-	-	-	-	H9	D15	PG3	I/O	FT_hs	-	SPI1_MISO, FMC_A13, SAI2_FS_B, EVENTOUT	-
-	-	-	-	-	J10	F12	PG4	I/O	FT_hs	-	SPI1_MOSI, FMC_A14, SAI2_MCLK_B, EVENTOUT	-
-	-	-	-	-	G12	E14	PG5	I/O	FT_hs	-	SPI1_NSS, LPUART1_CTS, GFXTIM_TE/DSI_TE, FMC_A15, SAI2_SD_B, EVENTOUT	-
-	-	-	-	-	G10	D14	PG6	I/O	FT_hs	-	OCTOSPIM_P1_DQS, I2C3_SMBA, SPI1_RDY, LCD_R1, LPUART1_RTS/LPUART1_DE, UCPD1_FRSTX1, EVENTOUT	-
-	-	-	-	-	G14	D13	PG7	I/O	FT_fhs	-	SAI1_CK1, I2C3_SCL, OCTOSPIM_P2_DQS, MDF1_CCK0, LPUART1_TX, UCPD1_FRSTX2, FMC_INT, SAI1_MCLK_A, EVENTOUT	-
-	-	-	-	-	F11	E13	PG8	I/O	FT_fs	-	I2C3_SDA, LPUART1_RX, EVENTOUT	-
-	-	-	-	-	N4	G10	VSS	S	-	-	-	-
-	-	-	-	-	E2	G11	VDDIO2	S	-	-	-	-

Table 27. STM32U5Gxxx pin/ball definitions[1] (continued)

Pin number							Pin name (function after reset)	Pin type	I/O structure	Notes	Alternate functions	Additional functions
LQFP100	LQFP100 SMPS	LQFP100 DSI SMPS	LQFP144 DSI SMPS	UFBGA144 DSI SMPS	WLCSP208 DSI SMPS	TFBGA216 DSI SMPS						
63	63	-	98	G9	D5	C15	PC6	I/O	FT_ha	-	CSLEEP, TIM3_CH1, TIM8_CH1, MDF1_CKI3, LCD_R0, SDMMC1_D0DIR, TSC_G4_IO1, DCMI_D0/PSSI_D0, SDMMC2_D6, SDMMC1_D6, SAI2_MCLK_A, EVENTOUT	-
64	64	-	99	F9	D3	B15	PC7	I/O	FT_ha	-	CDSTOP, TIM3_CH2, TIM8_CH2, MDF1_SDI3, LCD_R1, SDMMC1_D123DIR, TSC_G4_IO2, DCMI_D1/PSSI_D1, SDMMC2_D7, SDMMC1_D7, SAI2_MCLK_B, LPTIM2_CH2, EVENTOUT	-
65	65	-	100	D12	D7	A14	PC8	I/O	FT_ha	-	SRDSTOP, TIM3_CH3, TIM8_CH3, USART6_RX, LCD_G0, TSC_G4_IO3, DCMI_D2/PSSI_D2, SDMMC1_D0, LPTIM3_CH1, EVENTOUT	-
66	66	-	101	F8	D9	C14	PC9	I/O	FT_ha	-	TRACED0, TIM8_BKIN2, TIM3_CH4, TIM8_CH4, DCMI_D3/PSSI_D3, USART6_TX, LCD_G1, TSC_G4_IO4, SDMMC1_D1, LPTIM3_CH2, EVENTOUT	-
67	67	69	102	D11	C8	A13	PA8	I/O	FT_hv	-	MCO, TIM1_CH1, GFXTIM_LCKCAL, SAI1_CK2, SPI1_RDY, USART1_CK, SDMMC2_D1, OTG_HS_SOF, GFXTIM_FCKCAL, TRACECLK, SAI1_SCK_A, LPTIM2_CH1, EVENTOUT	-
68	68	70	103	E9	C6	E12	PA9	I/O	FT_u	-	TIM1_CH2, SPI2_SCK, DCMI_D0/PSSI_D0, USART1_TX(boot), SAI1_FS_A, TIM15_BKIN, EVENTOUT	OTG_HS_VBUS

Table 27. STM32U5Gxxx pin/ball definitions[1] (continued)

Pin number							Pin name (function after reset)	Pin type	I/O structure	Notes	Alternate functions	Additional functions
LQFP100	LQFP100 SMPS	LQFP100 DSI SMPS	LQFP144 DSI SMPS	UFBGA144 DSI SMPS	WLCSP208 DSI SMPS	TFBGA216 DSI SMPS						
69	69	71	104	B12	C4	D12	PA10	I/O	FT_u	-	CRS_SYNC, TIM1_CH3, LPTIM2_IN2, SAI1_D1, DCMI_D1/PSSI_D1, USART1_RX(boot), OTG_HS_ID, SAI1_SD_A, TIM17_BKIN, EVENTOUT	-
-	-	-	-	-	D1	F11	VDD11USB	S	-	-	-	-
70	70	72	105	C12	C2	B14	PA11	I/O	TT	(4) (6)	TIM1_CH4, TIM1_BKIN2, SPI1_MISO, USART1_CTS, FDCAN1_RX, EVENTOUT	OTG_HS_DM(boot)
71	71	73	106	C11	B1	B13	PA12	I/O	TT	(4) (6)	TIM1_ETR, SPI1_MOSI, OCTOSPIM_P2_NCS, USART1_RTS/USART1_DE, FDCAN1_TX, EVENTOUT	OTG_HS_DP(boot)
72	72	74	107	C10	B3	C13	PA13 (JTMS/SWDIO)	I/O	FT	(7)	JTMS/SWDIO, IR_OUT, SAI1_SD_B, EVENTOUT	-
-	-	-	-	-	P3	-	VSS	S	-	-	-	-
73	73	75	108	D10	A2	E9	VDDUSB	S	-	-	-	-
74	74	-	-	M1	-	H10	VSS	S	-	-	-	-
75	75	-	-	-	A6	-	VDD	S	-	-	-	-
-	-	-	-	-	A4	E11	VDD11	S	-	-	-	-
-	-	-	-	-	B7	D11	PH2	I/O	FT_h	-	OCTOSPIM_P1_IO4, EVENTOUT	-
-	-	-	-	-	E10	C12	PH4	I/O	FT_fh	-	I2C5_SDA, I2C2_SCL, OCTOSPIM_P2_DQS, PSSI_D14, EVENTOUT	-

Table 27. STM32U5Gxxx pin/ball definitions[1] (continued)

Pin number							Pin name (function after reset)	Pin type	I/O structure	Notes	Alternate functions	Additional functions
LQFP100	LQFP100 SMPS	LQFP100 DSI SMPS	LQFP144 DSI SMPS	UFBGA144 DSI SMPS	WLCSP208 DSI SMPS	TFBGA216 DSI SMPS						
-	-	-	-	-	F13	B12	PH5	I/O	FT_f	-	I2C5_SCL, I2C2_SDA, DCMI_PIXCLK/PSSI_PDCK, EVENTOUT	-
-	-	-	-	-	H15	C11	PH6	I/O	FT_hv	-	I2C5_SMBA, I2C2_SMBA, OCTOSPIM_P2_CLK, DCMI_D8/PSSI_D8, EVENTOUT	-
-	-	-	-	-	E12	B11	PH7	I/O	FT_fhv	-	I2C3_SCL, OCTOSPIM_P2_NCLK, DCMI_D9/PSSI_D9, EVENTOUT	-
-	-	-	-	-	G16	D10	PH8	I/O	FT_fh	-	I2C3_SDA, OCTOSPIM_P2_IO3, DCMI_HSYNC/PSSI_DE, EVENTOUT	-
-	-	76	109	-	-	-	VDD	S	-	-	-	-
-	-	77	110	M12	B5	R15	VSS	S	-	-	-	-
76	76	78	111	B11	D11	A12	PA14 (JTCK/SWCLK)	I/O	FT	(7)	JTCK/SWCLK, LPTIM1_CH1, I2C1_SMBA, I2C4_SMBA, OTG_HS_SOF, SAI1_FS_B, EVENTOUT	-
77	77	79	112	C9	A8	A11	PA15 (JTDI)	I/O	FT_c	(5) (7)	JTDI, TIM2_CH1, TIM2_ETR, USART2_RX, SPI1_NSS, SPI3_NSS, USART3_RTS/USART3_DE, UART4_RTS/UART4_DE, SAI2_FS_B, EVENTOUT	UCPD1_CC1
78	78	80	113	B10	B9	A10	PC10	I/O	FT_ha	-	TRACED1, LPTIM3_ETR, ADF1_CCK1, SPI3_SCK, USART3_TX(boot), UART4_TX, TSC_G3_IO2, DCMI_D8/PSSI_D8, LPGPIO1_P8, SDMMC1_D2, SAI2_SCK_B, EVENTOUT	-

Table 27. STM32U5Gxxx pin/ball definitions[1] (continued)

Pin number							Pin name (function after reset)	Pin type	I/O structure	Notes	Alternate functions	Additional functions
LQFP100	LQFP100 SMPS	LQFP100 DSI SMPS	LQFP144 DSI SMPS	UFBGA144 DSI SMPS	WLCSP208 DSI SMPS	TFBGA216 DSI SMPS						
79	79	81	114	C8	C10	B10	PC11	I/O	FT_ha	-	LPTIM3_IN1, ADF1_SDI0, DCMI_D2/PSSI_D2, OCTOSPIM_P1_NCS, SPI3_MISO, USART3_RX(boot), UART4_RX, TSC_G3_IO3, DCMI_D4/PSSI_D4, UCPD1_FRSTX2, SDMMC1_D3, SAI2_MCLK_B, EVENTOUT	-
80	80	82	115	A11	E14	C10	PC12	I/O	FT_hav	-	TRACED3, SPI3_MOSI, USART3_CK, UART5_TX, TSC_G3_IO4, DCMI_D9/PSSI_D9, LPGPIO1_P10, SDMMC1_CK, SAI2_SD_B, EVENTOUT	-
81	81	83	116	D8	F15	D9	PD0	I/O	FT_fh	(4)	I2C6_SDA, TIM8_CH4N, I2C5_SDA, SPI2_NSS, LCD_B4, FDCAN1_RX, FMC_D2/FMC_AD2, EVENTOUT	-
82	82	84	117	E7	A10	C9	PD1	I/O	FT_fh	(4)	I2C6_SCL, I2C5_SCL, SPI2_SCK, LCD_B5, FDCAN1_TX, FMC_D3/FMC_AD3, EVENTOUT	-
83	83	85	118	B9	D13	B9	PD2	I/O	FT_h	-	TRACED2, TIM3_ETR, I2C5_SMBA, USART3_RTS/USART3_DE, UART5_RX, TSC_SYNC, DCMI_D11/PSSI_D11, LPGPIO1_P7, SDMMC1_CMD, LPTIM4_ETR, FMC_A20, EVENTOUT	-
84	84	86	119	A10	C12	A9	PD3	I/O	FT_hv	-	I2C6_SMBA, SPI2_SCK, DCMI_D5/PSSI_D5, SPI2_MISO, MDF1_SDI0, USART2_CTS, LCD_CLK, OCTOSPIM_P2_NCS, FMC_CLK, EVENTOUT	-

Table 27. STM32U5Gxxx pin/ball definitions[1] (continued)

Pin number							Pin name (function after reset)	Pin type	I/O structure	Notes	Alternate functions	Additional functions
LQFP100	LQFP100 SMPS	LQFP100 DSI SMPS	LQFP144 DSI SMPS	UFBGA144 DSI SMPS	WLCSP208 DSI SMPS	TFBGA216 DSI SMPS						
85	85	87	120	C7	D15	A8	PD4	I/O	FT_h	-	SPI2_MOSI, MDF1_CKI0, USART2_RTS/USART2_DE, OCTOSPIM_P1_IO4, FMC_NOE, EVENTOUT	-
86	86	88	121	B8	E16	B8	PD5	I/O	FT_h	-	SPI2_RDY, USART2_TX, OCTOSPIM_P1_IO5, FMC_NWE, EVENTOUT	-
-	-	-	-	-	B11	H15	VSS	S	-	-	-	-
-	-	89	122	-	A12	-	VDD	S	-	-	-	-
87	87	-	123	D7	F17	C8	PD6	I/O	FT_hv	-	SAI1_D1, DCMI_D10/PSSI_D10, SPI3_MOSI, MDF1_SDI1, USART2_RX, LCD_DE, OCTOSPIM_P1_IO6, SDMMC2_CK, FMC_NWAIT, SAI1_SD_A, EVENTOUT	-
88	88	-	124	A9	C14	D8	PD7	I/O	FT_h	-	GFXTIM_FCKCAL, GFXTIM_LCKCAL, MDF1_CKI1, USART2_CK, OCTOSPIM_P1_IO7, SDMMC2_CMD, FMC_NCE/FMC_NE1, LPTIM4_OUT, EVENTOUT	-
-	-	-	125	B7	B13	A7	PG9	I/O	FT_hs	-	OCTOSPIM_P2_IO6, SPI3_SCK(boot), USART1_TX, FMC_NCE/FMC_NE2, SAI2_SCK_A, TIM15_CH1N, EVENTOUT	-
-	-	-	126	A8	F19	B7	PG10	I/O	FT_hs	-	LPTIM1_IN1, OCTOSPIM_P2_IO7, SPI3_MISO(boot), USART1_RX, FMC_NE3, SAI2_FS_A, TIM15_CH1, EVENTOUT	-

Table 27. STM32U5Gxxx pin/ball definitions[1] (continued)

Pin number							Pin name (function after reset)	Pin type	I/O structure	Notes	Alternate functions	Additional functions
LQFP100	LQFP100 SMPS	LQFP100 DSI SMPS	LQFP144 DSI SMPS	UFBGA144 DSI SMPS	WLCSP208 DSI SMPS	TFBGA216 DSI SMPS						
-	-	-	-	-	E18	C7	PG11	I/O	FT_hs	-	LPTIM1_IN2, OCTOSPIM_P1_IO5, SPI3_MOSI, USART1_CTS, SAI2_MCLK_A, TIM15_CH2, EVENTOUT	-
-	-	-	127	A7	D17	A6	PG12	I/O	FT_hs	-	LPTIM1_ETR, OCTOSPIM_P2_NCS, SPI3_NSS(boot), USART1_RTS/USART1_DE, FMC_NE4, SAI2_SD_A, EVENTOUT	-
-	-	-	128	C6	A14	B6	PG13	I/O	FT_fhs	-	I2C1_SDA, SPI3_RDY, USART1_CK, LCD_R0, FMC_A24, EVENTOUT	-
-	-	-	129	A6	C16	D7	PG14	I/O	FT_fhs	-	LPTIM1_CH2, I2C1_SCL, LCD_R1, FMC_A25, EVENTOUT	-
-	-	-	130	-	B15	J10	VSS	S	-	-	-	-
-	-	-	131	E6	A16	E8	VDDIO2	S	-	-	-	-
-	-	-	132	B6	H17	A5	PG15	I/O	FT_hs	-	LPTIM1_CH1, I2C1_SMBA, OCTOSPIM_P2_DQS, DCMI_D13/PSSI_D13, EVENTOUT	-
89	89	90	133	D6	B17	E7	PB3 (JTDO/TRACESWO)	I/O	FT_fha	-	JTDO/TRACESWO, TIM2_CH2, LPTIM1_CH1, ADF1_CCK0, I2C1_SDA, SPI1_SCK, SPI3_SCK, USART1_RTS/USART1_DE, CRS_SYNC, LPGPIO1_P11, SDMMC2_D2, SAI1_SCK_B, EVENTOUT	COMP2_INM2

Table 27. STM32U5Gxxx pin/ball definitions[1] (continued)

Pin number							Pin name (function after reset)	Pin type	I/O structure	Notes	Alternate functions	Additional functions
LQFP100	LQFP100 SMPS	LQFP100 DSI SMPS	LQFP144 DSI SMPS	UFBGA144 DSI SMPS	WLCSP208 DSI SMPS	TFBGA216 DSI SMPS						
90	90	91	134	A5	G18	D6	PB4 (NJTRST)	I/O	FT_fha	(7)	NJTRST, LPTIM1_CH2, TIM3_CH1, ADF1_SDI0, I2C3_SDA, SPI1_MISO, SPI3_MISO, USART1_CTS, UART5_RTS/UART5_DE, TSC_G2_IO1, DCMI_D12/PSSI_D12, LPGPIO1_P12, SDMMC2_D3, SAI1_MCLK_B, TIM17_BKIN, EVENTOUT	COMP2_INP1
91	91	92	135	B5	C18	B5	PB5	I/O	FT_ havc	-	LPTIM1_IN1, TIM3_CH2, OCTOSPIM_P1_NCLK, I2C1_SMBA, SPI1_MOSI, SPI3_MOSI(boot), USART1_CK, UART5_CTS, TSC_G2_IO2, DCMI_D10/PSSI_D10, COMP2_OUT, SAI1_SD_B, TIM16_BKIN, EVENTOUT	UCPD1_DBCC1, WKUP6
92	92	93	136	A4	A18	A4	PB6	I/O	FT_fa	-	LPTIM1_ETR, TIM4_CH1, TIM8_BKIN2, I2C1_SCL(boot), I2C4_SCL, MDF1_SDI5, USART1_TX, TSC_G2_IO3, DCMI_D5/PSSI_D5, SAI1_FS_B, TIM16_CH1N, EVENTOUT	COMP2_INP2, WKUP3
93	93	94	137	C5	D19	A3	PB7	I/O	FT_ fhav	-	LPTIM1_IN2, TIM4_CH2, TIM8_BKIN, I2C1_SDA(boot), I2C4_SDA, MDF1_CKI5, USART1_RX, UART4_CTS, TSC_G2_IO4, DCMI_VSYNC/PSSI_RDY, GFXTIM_TE/DSI_TE, FMC_NL, TIM17_CH1N, EVENTOUT	COMP2_INM1, PVD_IN, WKUP4
94	94	95	138	A3	E20	B4	PH3-BOOT0	I/O	FT	-	EVENTOUT	-

Table 27. STM32U5Gxxx pin/ball definitions[1] (continued)

Pin number							Pin name (function after reset)	Pin type	I/O structure	Notes	Alternate functions	Additional functions
LQFP100	LQFP100 SMPS	LQFP100 DSI SMPS	LQFP144 DSI SMPS	UFBGA144 DSI SMPS	WLCSP208 DSI SMPS	TFBGA216 DSI SMPS						
95	95	96	139	B4	B19	C6	PB8	I/O	FT_fh	(4)	TIM4_CH3, SAI1_CK1, I2C1_SCL, MDF1_CCK0, SPI3_RDY, LCD_B1, SDMMC1_CKIN, FDCAN1_RX(boot), DCMI_D6/PSSI_D6, SDMMC2_D4, SDMMC1_D4, SAI1_MCLK_A, TIM16_CH1, EVENTOUT	WKUP5
96	96	97	140	A2	C20	C5	PB9	I/O	FT_fh	(4)	IR_OUT, TIM4_CH4, SAI1_D2, I2C1_SDA, SPI2_NSS, LCD_B0, SDMMC1_CDIR, FDCAN1_TX(boot), DCMI_D7/PSSI_D7, SDMMC2_D5, SDMMC1_D5, SAI1_FS_A, TIM17_CH1, EVENTOUT	-
97	97	-	141	B3	A20	A2	PE0	I/O	FT_h	-	TIM4_ETR, USART6_RX, LCD_HSYNC, DCMI_D2/PSSI_D2, LPGPIO1_P13, FMC_NBL0, TIM16_CH1, EVENTOUT	-
98	-	-	-	-	B21	B3	PE1	I/O	FT_h	-	USART6_TX, LCD_VSYNC, DCMI_D3/PSSI_D3, FMC_NBL1, TIM17_CH1, EVENTOUT	-
-	98	98	142	D4	A22	E6	VDD11	S	-	-	-	-
99	99	99	143	-	R4	J15	VSS	S	-	-	-	-
100	100	100	144	-	-	-	VDD	S	-	-	-	-
-	-	-	-	-	A26	-	VDD	S	-	-	-	-
-	-	-	-	-	C22	C4	PI5	I/O	FT_hv	-	TIM8_CH1, OCTOSPIM_P2_NCS, DCMI_VSYNC/PSSI_RDY, EVENTOUT	-

Table 27. STM32U5Gxxx pin/ball definitions[(1)] (continued)

Pin number							Pin name (function after reset)	Pin type	I/O structure	Notes	Alternate functions	Additional functions
LQFP100	LQFP100 SMPS	LQFP100 DSI SMPS	LQFP144 DSI SMPS	UFBGA144 DSI SMPS	WLCSP208 DSI SMPS	TFBGA216 DSI SMPS						
-	-	-	-	-	D21	D5	PI6	I/O	FT_hvp	-	TIM8_CH2, OCTOSPIM_P2_CLK, DCMI_D6/PSSI_D6, EVENTOUT	-
-	-	-	-	-	J18	D4	PI7	I/O	FT_hvp	-	TIM8_CH3, OCTOSPIM_P2_NCLK, DCMI_D7/PSSI_D7, EVENTOUT	-

1. Function availability depends on the chosen device.
2. PC13, PC14, and PC15 are supplied through the power switch (by V_{SW}). Since the switch only sinks a limited amount of current (3 mA), the use of PC13 to PC15 GPIOs in output mode is limited:
   - PC13 speed must not exceed 2 MHz with a maximum load of 30 pF. Refer to FT_o electrical characteristics for PC14, PC15.
   - These GPIOs must not be used as current sources (for example to drive a LED).
3. After a backup domain power-up, PC13, PC14, and PC15 operate as GPIOs. Their function depends then on the content of the RTC registers that are not reset by the system reset. For details on how to manage these GPIOs, refer to the backup domain and RTC register descriptions in the product reference manual.
4. The WLCSP208 package does not support FDCAN.
5. After reset, a pull-down resistor (Rd = 5.1 kΩ from UCPD peripheral) can be activated on PA15 and PB15 (UCPD1_CC1, UCPD1_CC2). The pull-down on PA15 (UCPD1_CC1) is activated by high level on PB5 (UCPD1_DBCC1). The pull-down on PB15 (UCPD1_CC2) is activated by high level on PB14 (UCPD1_DBCC2). This pull-down control (dead battery support on UCPD) can be disabled by setting UCPD_DBDIS = 1 in the PWR_UCPDR register.
6. GPIO is 5V-tolerant when the USB PHY is powered on.
7. After reset, this pin is configured as JTAG/SWD alternate functions. The internal pull-up on PA15, PA13, PB4 pins, and the internal pull-down on PA14 pin are activated.

4.3 Alternate functions

Table 28. Alternate function AF0 to AF7[1]

Port		AF0	AF1	AF2	AF3	AF4	AF5	AF6	AF7
		CRS/LPTIM1/ SYS_AF	LPTIM1/ TIM1/2/5/8	GFXTIM/ I2C5/6/ LPTIM1/2/3/ TIM1/2/3/4/5	ADF1/I2C4/ OCTOSPIM_P1/ OTG_HS/ SAI1/SPI2/ TIM1/8/USART2	DCMI/ I2C1/2/3/4/5/ LPTIM3	DCMI/ GFXTIM/ I2C4/MDF1/ OCTOSPIM_P1/2/ SPI1/2/3	I2C3/MDF1/ OCTOSPIM_P2/ SPI3	LCD/ USART1/2/3/6
Port A	PA0	-	TIM2_CH1	TIM5_CH1	TIM8_ETR	-	-	SPI3_RDY	USART2_CTS
	PA1	LPTIM1_CH2	TIM2_CH2	TIM5_CH2	-	I2C1_SMBA	SPI1_SCK	-	USART2_ RTS/USART2_ DE
	PA2	-	TIM2_CH3	TIM5_CH3	-	-	SPI1_RDY	-	USART2_TX
	PA3	-	TIM2_CH4	TIM5_CH4	SAI1_CK1	-	-	-	USART2_RX
	PA4	-	-	-	OCTOSPIM_ P1_NCS	-	SPI1_NSS	SPI3_NSS	USART2_CK
	PA5	CSLEEP	TIM2_CH1	TIM2_ETR	TIM8_CH1N	PSSI_D14	SPI1_SCK	-	USART3_RX
	PA6	CDSTOP	TIM1_BKIN	TIM3_CH1	TIM8_BKIN	DCMI_ PIXCLK/ PSSI_PDCK	SPI1_MISO	-	USART3_CTS
	PA7	SRDSTOP	TIM1_CH1N	TIM3_CH2	TIM8_CH1N	I2C3_SCL	SPI1_MOSI	-	USART3_TX
	PA8	MCO	TIM1_CH1	GFXTIM_ LCKCAL	SAI1_CK2	-	SPI1_RDY	-	USART1_CK
	PA9	-	TIM1_CH2	-	SPI2_SCK	-	DCMI_D0/ PSSI_D0	-	USART1_TX
	PA10	CRS_SYNC	TIM1_CH3	LPTIM2_IN2	SAI1_D1	-	DCMI_D1/ PSSI_D1	-	USART1_RX
	PA11	-	TIM1_CH4	TIM1_BKIN2	-	-	SPI1_MISO	-	USART1_CTS
	PA12	-	TIM1_ETR	-	-	-	SPI1_MOSI	OCTOSPIM_P2 _NCS	USART1_ RTS/USART1_ DE

Table 28. Alternate function AF0 to AF7[(1)] (continued)

Port		AF0	AF1	AF2	AF3	AF4	AF5	AF6	AF7
		CRS/LPTIM1/ SYS_AF	LPTIM1/ TIM1/2/5/8	GFXTIM/ I2C5/6/ LPTIM1/2/3/ TIM1/2/3/4/5	ADF1/I2C4/ OCTOSPIM_P1/ OTG_HS/ SAI1/SPI2/ TIM1/8/USART2	DCMI/ I2C1/2/3/4/5/ LPTIM3	DCMI/ GFXTIM/ I2C4/MDF1/ OCTOSPIM_P1/2/ SPI1/2/3	I2C3/MDF1/ OCTOSPIM_P2/ SPI3	LCD/ USART1/2/3/6
Port A	PA13	JTMS/SWDIO	IR_OUT	-	-	-	-	-	-
	PA14	JTCK/SWCLK	LPTIM1_CH1	-	-	I2C1_SMBA	I2C4_SMBA	-	-
	PA15	JTDI	TIM2_CH1	TIM2_ETR	USART2_RX	-	SPI1_NSS	SPI3_NSS	USART3_ RTS/USART3_ DE
Port B	PB0	-	TIM1_CH2N	TIM3_CH3	TIM8_CH2N	LPTIM3_CH1	SPI1_NSS	-	USART3_CK
	PB1	-	TIM1_CH3N	TIM3_CH4	TIM8_CH3N	LPTIM3_CH2	-	MDF1_SDI0	USART3_ RTS/USART3_ DE
	PB2	-	LPTIM1_CH1	-	TIM8_CH4N	I2C3_SMBA	SPI1_RDY	MDF1_CKI0	-
	PB3	JTDO/ TRACESWO	TIM2_CH2	LPTIM1_CH1	ADF1_CCK0	I2C1_SDA	SPI1_SCK	SPI3_SCK	USART1_ RTS/USART1_ DE
	PB4	NJTRST	LPTIM1_CH2	TIM3_CH1	ADF1_SDI0	I2C3_SDA	SPI1_MISO	SPI3_MISO	USART1_CTS
	PB5	-	LPTIM1_IN1	TIM3_CH2	OCTOSPIM_ P1_NCLK	I2C1_SMBA	SPI1_MOSI	SPI3_MOSI	USART1_CK
	PB6	-	LPTIM1_ETR	TIM4_CH1	TIM8_BKIN2	I2C1_SCL	I2C4_SCL	MDF1_SDI5	USART1_TX
	PB7	-	LPTIM1_IN2	TIM4_CH2	TIM8_BKIN	I2C1_SDA	I2C4_SDA	MDF1_CKI5	USART1_RX
	PB8	-	-	TIM4_CH3	SAI1_CK1	I2C1_SCL	MDF1_CCK0	SPI3_RDY	LCD_B1
	PB9	-	IR_OUT	TIM4_CH4	SAI1_D2	I2C1_SDA	SPI2_NSS	-	LCD_B0
	PB10	-	TIM2_CH3	LPTIM3_CH1	I2C4_SCL	I2C2_SCL	SPI2_SCK	-	USART3_TX
	PB11	-	TIM2_CH4	-	I2C4_SDA	I2C2_SDA	SPI2_RDY	-	USART3_RX
	PB12	-	TIM1_BKIN	I2C6_SMBA	-	I2C2_SMBA	SPI2_NSS	MDF1_SDI1	USART3_CK

Table 28. Alternate function AF0 to AF7[(1)] (continued)

Port		AF0	AF1	AF2	AF3	AF4	AF5	AF6	AF7
		CRS/LPTIM1/ SYS_AF	LPTIM1/ TIM1/2/5/8	GFXTIM/ I2C5/6/ LPTIM1/2/3/ TIM1/2/3/4/5	ADF1/I2C4/ OCTOSPIM_P1/ OTG_HS/ SAI1/SPI2/ TIM1/8/USART2	DCMI/ I2C1/2/3/4/5/ LPTIM3	DCMI/ GFXTIM/ I2C4/MDF1/ OCTOSPIM_P1/2/ SPI1/2/3	I2C3/MDF1/ OCTOSPIM_P2/ SPI3	LCD/ USART1/2/3/6
Port B	PB13	-	TIM1_CH1N	LPTIM3_IN1	-	I2C2_SCL	SPI2_SCK	MDF1_CKI1	USART3_CTS
	PB14	-	TIM1_CH2N	LPTIM3_ETR	TIM8_CH2N	I2C2_SDA	SPI2_MISO	MDF1_SDI2	USART3_ RTS/USART3_ DE
	PB15	RTC_REFIN	TIM1_CH3N	LPTIM2_IN2	TIM8_CH3N	-	SPI2_MOSI	MDF1_CKI2	-
Port C	PC0	-	LPTIM1_IN1	GFXTIM_ FCKCAL	OCTOSPIM_ P1_IO7	I2C3_SCL	SPI2_RDY	MDF1_SDI4	USART6_CTS
	PC1	TRACED0	LPTIM1_CH1	-	SPI2_MOSI	I2C3_SDA	-	MDF1_CKI4	USART6_CK
	PC2	-	LPTIM1_IN2	-	-	-	SPI2_MISO	MDF1_CCK1	USART6_RX
	PC3	-	LPTIM1_ETR	LPTIM3_CH1	SAI1_D1	-	SPI2_MOSI	-	USART6_TX
	PC4	-	-	I2C6_SMBA	-	-	-	-	USART3_TX
	PC5	-	TIM1_CH4N	-	SAI1_D3	PSSI_D15	-	-	USART3_RX
	PC6	CSLEEP	-	TIM3_CH1	TIM8_CH1	-	-	MDF1_CKI3	LCD_R0
	PC7	CDSTOP	-	TIM3_CH2	TIM8_CH2	-	-	MDF1_SDI3	LCD_R1
	PC8	SRDSTOP	-	TIM3_CH3	TIM8_CH3	-	-	-	USART6_RX
	PC9	TRACED0	TIM8_BKIN2	TIM3_CH4	TIM8_CH4	DCMI_D3/ PSSI_D3	-	-	USART6_TX
	PC10	TRACED1	-	LPTIM3_ETR	ADF1_CCK1	-	-	SPI3_SCK	USART3_TX
	PC11	-	-	LPTIM3_IN1	ADF1_SDI0	DCMI_D2/ PSSI_D2	OCTOSPIM_ P1_NCS	SPI3_MISO	USART3_RX
	PC12	TRACED3	-	-	-	-	-	SPI3_MOSI	USART3_CK
	PC13	-	-	-	-	-	-	-	-
	PC14	-	-	-	-	-	-	-	-

Table 28. Alternate function AF0 to AF7[(1)] (continued)

Port		AF0	AF1	AF2	AF3	AF4	AF5	AF6	AF7
		CRS/LPTIM1/ SYS_AF	LPTIM1/ TIM1/2/5/8	GFXTIM/ I2C5/6/ LPTIM1/2/3/ TIM1/2/3/4/5	ADF1/I2C4/ OCTOSPIM_P1/ OTG_HS/ SAI1/SPI2/ TIM1/8/USART2	DCMI/ I2C1/2/3/4/5/ LPTIM3	DCMI/ GFXTIM/ I2C4/MDF1/ OCTOSPIM_P1/2/ SPI1/2/3	I2C3/MDF1/ OCTOSPIM_P2/ SPI3	LCD/ USART1/2/3/6
Port C	PC15	-	-	-	-	-	-	-	-
Port D	PD0	-	-	I2C6_SDA	TIM8_CH4N	I2C5_SDA	SPI2_NSS	-	-
	PD1	-	-	I2C6_SCL	-	I2C5_SCL	SPI2_SCK	-	-
	PD2	TRACED2	-	TIM3_ETR	-	I2C5_SMBA	-	-	USART3_ RTS/USART3_ DE
	PD3	-	-	I2C6_SMBA	SPI2_SCK	DCMI_D5/ PSSI_D5	SPI2_MISO	MDF1_SDI0	USART2_CTS
	PD4	-	-	-	-	-	SPI2_MOSI	MDF1_CKI0	USART2_ RTS/USART2_ DE
	PD5	-	-	-	-	-	SPI2_RDY	-	USART2_TX
	PD6	-	-	-	SAI1_D1	DCMI_D10/ PSSI_D10	SPI3_MOSI	MDF1_SDI1	USART2_RX
	PD7	-	-	GFXTIM_ FCKCAL	-	-	GFXTIM_LCKCAL	MDF1_CKI1	USART2_CK
	PD8	-	-	-	-	-	-	-	USART3_TX
	PD9	-	-	LPTIM2_IN2	-	-	-	-	USART3_RX
	PD10	-	-	LPTIM2_CH2	-	I2C5_SMBA	-	-	USART3_CK
	PD11	-	-	-	-	I2C4_SMBA	-	-	USART3_CTS
	PD12	-	-	TIM4_CH1	-	I2C4_SCL	-	-	USART3_ RTS/USART3_ DE

Table 28. Alternate function AF0 to AF7[(1)] (continued)

Port		AF0	AF1	AF2	AF3	AF4	AF5	AF6	AF7
		CRS/LPTIM1/ SYS_AF	LPTIM1/ TIM1/2/5/8	GFXTIM/ I2C5/6/ LPTIM1/2/3/ TIM1/2/3/4/5	ADF1/I2C4/ OCTOSPIM_P1/ OTG_HS/ SAI1/SPI2/ TIM1/8/USART2	DCMI/ I2C1/2/3/4/5/ LPTIM3	DCMI/ GFXTIM/ I2C4/MDF1/ OCTOSPIM_P1/2/ SPI1/2/3	I2C3/MDF1/ OCTOSPIM_P2/ SPI3	LCD/ USART1/2/3/6
Port D	PD13	-	-	TIM4_CH2	-	I2C4_SDA	GFXTIM_TE	-	USART6_CTS
	PD14	-	-	TIM4_CH3	-	-	-	-	USART6_CK
	PD15	-	-	TIM4_CH4	-	-	-	-	USART6_ RTS/USART6_ DE
Port E	PE0	-	-	TIM4_ETR	-	-	-	-	USART6_RX
	PE1	-	-	-	-	-	-	-	USART6_TX
	PE2	TRACECLK	-	TIM3_ETR	SAI1_CK1	-	-	-	USART6_CK
	PE3	TRACED0	-	TIM3_CH1	OCTOSPIM_ P1_DQS	-	-	-	USART6_CTS
	PE4	TRACED1	-	TIM3_CH2	SAI1_D2	-	-	MDF1_SDI3	USART6_ RTS/USART6_ DE
	PE5	TRACED2	-	TIM3_CH3	SAI1_CK2	-	-	MDF1_CKI3	-
	PE6	TRACED3	-	TIM3_CH4	SAI1_D1	-	-	-	-
	PE7	-	TIM1_ETR	-	-	-	-	MDF1_SDI2	-
	PE8	-	TIM1_CH1N	-	-	-	-	MDF1_CKI2	-
	PE9	-	TIM1_CH1	-	ADF1_CCK0	-	-	MDF1_CCK0	-
	PE10	-	TIM1_CH2N	-	ADF1_SDI0	-	-	MDF1_SDI4	-
	PE11	-	TIM1_CH2	-	-	-	SPI1_RDY	MDF1_CKI4	-
	PE12	-	TIM1_CH3N	-	-	-	SPI1_NSS	MDF1_SDI5	-
	PE13	-	TIM1_CH3	-	-	-	SPI1_SCK	MDF1_CKI5	-
	PE14	-	TIM1_CH4	TIM1_BKIN2	-	-	SPI1_MISO	-	-

Table 28. Alternate function AF0 to AF7[(1)] (continued)

Port		AF0	AF1	AF2	AF3	AF4	AF5	AF6	AF7
		CRS/LPTIM1/ SYS_AF	LPTIM1/ TIM1/2/5/8	GFXTIM/ I2C5/6/ LPTIM1/2/3/ TIM1/2/3/4/5	ADF1/I2C4/ OCTOSPIM_P1/ OTG_HS/ SAI1/SPI2/ TIM1/8/USART2	DCMI/ I2C1/2/3/4/5/ LPTIM3	DCMI/ GFXTIM/ I2C4/MDF1/ OCTOSPIM_P1/2/ SPI1/2/3	I2C3/MDF1/ OCTOSPIM_P2/ SPI3	LCD/ USART1/2/3/6
Port E	PE15	-	TIM1_BKIN	GFXTIM_ LCKCAL	TIM1_CH4N	-	SPI1_MOSI	-	-
Port F	PF0	-	-	I2C6_SDA	-	I2C2_SDA	OCTOSPIM_ P2_IO0	-	USART6_TX
	PF1	-	-	I2C6_SCL	-	I2C2_SCL	OCTOSPIM_ P2_IO1	-	USART6_RX
	PF2	-	-	LPTIM3_CH2	-	I2C2_SMBA	OCTOSPIM_ P2_IO2	-	USART6_CK
	PF3	-	-	LPTIM3_IN1	ADF1_CCK0	-	OCTOSPIM_ P2_IO3	MDF1_CCK0	USART6_CTS
	PF4	-	-	LPTIM3_ETR	ADF1_SDI0	-	OCTOSPIM_ P2_CLK	MDF1_SDI0	USART6_ RTS/USART6_ DE
	PF5	-	-	LPTIM3_CH1	-	-	OCTOSPIM_ P2_NCLK	MDF1_CKI0	-
	PF6	-	TIM5_ETR	TIM5_CH1	-	DCMI_D12/ PSSI_D12	OCTOSPIM_ P2_NCS	-	-
	PF7	-	-	TIM5_CH2	-	-	-	-	-
	PF8	-	-	TIM5_CH3	-	PSSI_D14	-	-	-
	PF9	-	-	TIM5_CH4	-	PSSI_D15	-	-	-
	PF10	-	-	-	OCTOSPIM_ P1_CLK	PSSI_D15	-	MDF1_CCK1	-
	PF11	-	-	-	OCTOSPIM_ P1_NCLK	-	-	-	-

Table 28. Alternate function AF0 to AF7[1] (continued)

Port		AF0	AF1	AF2	AF3	AF4	AF5	AF6	AF7
		CRS/LPTIM1/ SYS_AF	LPTIM1/ TIM1/2/5/8	GFXTIM/ I2C5/6/ LPTIM1/2/3/ TIM1/2/3/4/5	ADF1/I2C4/ OCTOSPIM_P1/ OTG_HS/ SAI1/SPI2/ TIM1/8/USART2	DCMI/ I2C1/2/3/4/5/ LPTIM3	DCMI/ GFXTIM/ I2C4/MDF1/ OCTOSPIM_P1/2/ SPI1/2/3	I2C3/MDF1/ OCTOSPIM_P2/ SPI3	LCD/ USART1/2/3/6
Port F	PF12	-	-	-	-	-	OCTOSPIM_ P2_DQS	-	-
	PF13	-	-	-	-	I2C4_SMBA	-	-	-
	PF14	-	-	-	-	I2C4_SCL	-	-	-
	PF15	-	-	-	-	I2C4_SDA	-	-	-
Port G	PG0	-	-	-	-	-	OCTOSPIM_ P2_IO4	-	-
	PG1	-	-	-	-	-	OCTOSPIM_ P2_IO5	-	-
	PG2	-	-	-	-	-	SPI1_SCK	-	-
	PG3	-	-	-	-	-	SPI1_MISO	-	-
	PG4	-	-	-	-	-	SPI1_MOSI	-	-
	PG5	-	-	-	-	-	SPI1_NSS	-	-
	PG6	-	-	-	OCTOSPIM_ P1_DQS	I2C3_SMBA	SPI1_RDY	-	LCD_R1
	PG7	-	-	-	SAI1_CK1	I2C3_SCL	OCTOSPIM_ P2_DQS	MDF1_CCK0	-
	PG8	-	-	-	-	I2C3_SDA	-	-	-
	PG9	-	-	-	-	-	OCTOSPIM_ P2_IO6	SPI3_SCK	USART1_TX
	PG10	-	LPTIM1_IN1	-	-	-	OCTOSPIM_ P2_IO7	SPI3_MISO	USART1_RX
	PG11	-	LPTIM1_IN2	-	OCTOSPIM_ P1_IO5	-	-	SPI3_MOSI	USART1_CTS

Table 28. Alternate function AF0 to AF7[(1)] (continued)

Port		AF0	AF1	AF2	AF3	AF4	AF5	AF6	AF7
		CRS/LPTIM1/ SYS_AF	LPTIM1/ TIM1/2/5/8	GFXTIM/ I2C5/6/ LPTIM1/2/3/ TIM1/2/3/4/5	ADF1/I2C4/ OCTOSPIM_P1/ OTG_HS/ SAI1/SPI2/ TIM1/8/USART2	DCMI/ I2C1/2/3/4/5/ LPTIM3	DCMI/ GFXTIM/ I2C4/MDF1/ OCTOSPIM_P1/2/ SPI1/2/3	I2C3/MDF1/ OCTOSPIM_P2/ SPI3	LCD/ USART1/2/3/6
Port G	PG12	-	LPTIM1_ETR	-	-	-	OCTOSPIM_ P2_NCS	SPI3_NSS	USART1_ RTS/USART1_ DE
	PG13	-	-	-	-	I2C1_SDA	-	SPI3_RDY	USART1_CK
	PG14	-	LPTIM1_CH2	-	-	I2C1_SCL	-	-	-
	PG15	-	LPTIM1_CH1	-	-	I2C1_SMBA	OCTOSPIM_ P2_DQS	-	-
Port H	PH0	-	-	-	-	-	-	-	-
	PH1	-	-	-	-	-	-	-	-
	PH2	-	-	-	OCTOSPIM_ P1_IO4	-	-	-	-
	PH3	-	-	-	-	-	-	-	-
	PH4	-	-	I2C5_SDA	-	I2C2_SCL	OCTOSPIM_ P2_DQS	-	-
	PH5	-	-	I2C5_SCL	-	I2C2_SDA	-	-	-
	PH6	-	-	I2C5_SMBA	-	I2C2_SMBA	OCTOSPIM_ P2_CLK	-	-
	PH7	-	-	-	-	I2C3_SCL	OCTOSPIM_ P2_NCLK	-	-
	PH8	-	-	-	-	I2C3_SDA	OCTOSPIM_ P2_IO3	-	-
	PH9	-	-	-	-	I2C3_SMBA	OCTOSPIM_ P2_IO4	-	-

Table 28. Alternate function AF0 to AF7[(1)] (continued)

Port		AF0	AF1	AF2	AF3	AF4	AF5	AF6	AF7
		CRS/LPTIM1/ SYS_AF	LPTIM1/ TIM1/2/5/8	GFXTIM/ I2C5/6/ LPTIM1/2/3/ TIM1/2/3/4/5	ADF1/I2C4/ OCTOSPIM_P1/ OTG_HS/ SAI1/SPI2/ TIM1/8/USART2	DCMI/ I2C1/2/3/4/5/ LPTIM3	DCMI/ GFXTIM/ I2C4/MDF1/ OCTOSPIM_P1/2/ SPI1/2/3	I2C3/MDF1/ OCTOSPIM_P2/ SPI3	LCD/ USART1/2/3/6
Port H	PH10	-	-	TIM5_CH1	-	-	OCTOSPIM_ P2_IO5	-	-
	PH11	-	-	TIM5_CH2	-	-	OCTOSPIM_ P2_IO6	-	-
	PH12	-	-	TIM5_CH3	TIM8_CH4N	-	OCTOSPIM_ P2_IO7	-	-
	PH13	-	-	-	TIM8_CH1N	-	-	-	-
	PH14	-	-	-	TIM8_CH2N	-	-	-	-
	PH15	-	-	-	TIM8_CH3N	-	OCTOSPIM_ P2_IO6	-	-
Port I	PI0	-	-	TIM5_CH4	OCTOSPIM_P1_ IO5	-	SPI2_NSS	-	-
	PI1	-	-	-	-	-	SPI2_SCK	OCTOSPIM_ P2_IO2	-
	PI2	-	-	-	TIM8_CH4	-	SPI2_MISO	OCTOSPIM_ P2_IO1	-
	PI3	-	-	-	TIM8_ETR	-	SPI2_MOSI	OCTOSPIM_ P2_IO0	-
	PI4	-	-	-	TIM8_BKIN	-	SPI2_RDY	-	-
	PI5	-	-	-	TIM8_CH1	-	OCTOSPIM_ P2_NCS	-	-
	PI6	-	-	-	TIM8_CH2	-	OCTOSPIM_ P2_CLK	-	-
	PI7	-	-	-	TIM8_CH3	-	OCTOSPIM_ P2_NCLK	-	-

Table 28. Alternate function AF0 to AF7[(1)] (continued)

Port		AF0	AF1	AF2	AF3	AF4	AF5	AF6	AF7
		CRS/LPTIM1/ SYS_AF	LPTIM1/ TIM1/2/5/8	GFXTIM/ I2C5/6/ LPTIM1/2/3/ TIM1/2/3/4/5	ADF1/I2C4/ OCTOSPIM_P1/ OTG_HS/ SAI1/SPI2/ TIM1/8/USART2	DCMI/ I2C1/2/3/4/5/ LPTIM3	DCMI/ GFXTIM/ I2C4/MDF1/ OCTOSPIM_P1/2/ SPI1/2/3	I2C3/MDF1/ OCTOSPIM_P2/ SPI3	LCD/ USART1/2/3/6
Port I	PI8	-	-	-	-	-	-	-	-
	PI9	-	-	-	-	-	-	-	-
	PI10	-	-	-	-	-	-	-	-
	PI11	-	-	-	-	-	-	-	-
	PI12	-	-	-	-	-	-	-	-
	PI13	-	-	-	-	-	-	-	-
	PI14	-	-	-	-	-	-	-	-
	PI15	-	-	-	-	-	-	-	-
Port J	PJ0	-	-	-	-	I2C5_SMBA	-	-	-
	PJ1	-	-	-	-	I2C5_SDA	-	-	-
	PJ2	-	-	-	-	I2C5_SCL	-	-	-
	PJ3	-	-	-	-	-	-	-	USART6_TX
	PJ4	-	-	-	-	-	-	-	USART6_RX
	PJ5	-	-	-	-	-	-	-	USART6_ RTS/USART6_ DE
	PJ6	-	-	-	-	-	-	-	USART6_CK
	PJ7	-	-	-	-	-	-	-	USART6_CTS
	PJ8	-	-	I2C6_SMBA	-	-	-	-	-
	PJ9	-	-	I2C6_SDA	-	-	-	-	-
	PJ10	-	-	I2C6_SCL	-	-	-	-	-
	PJ11	-	-	-	-	-	-	-	-

1. Refer to the next table for AF8 to AF15.

Table 29. Alternate function AF8 to AF15(1)

Port		AF8	AF9	AF10	AF11	AF12	AF13	AF14	AF15
		HSPI1/LCD/ LPUART1/ SDMMC1/2/ UART4/5	CAN1/TSC	CRS/DCMI/ DSI/GFXTIM/ OCTOSPIM_P1/2/ OTG_HS	DSI/FMC/ GFXTIM/ LPGPIO1/ SDMMC2/ UCPD1	COMP1/2/ FMC/SDMMC1/2/ SYS_AF	GFXTIM/ LPTIM2/4/ SAI1/2	FMC/ LPTIM2/3/ TIM2/15/16/17	EVENTOUT
Port A	PA0	UART4_TX	-	OCTOSPIM_ P2_NCS	-	SDMMC2_CMD	AUDIOCLK	TIM2_ETR	EVENTOUT
	PA1	UART4_RX	-	OCTOSPIM_ P1_DQS	LPGPIO1_P0	-	-	TIM15_CH1N	EVENTOUT
	PA2	LPUART1_TX	-	OCTOSPIM_ P1_NCS	UCPD1_ FRSTX1	-	-	TIM15_CH1	EVENTOUT
	PA3	LPUART1_RX	-	OCTOSPIM_ P1_CLK	LPGPIO1_P1	-	SAI1_MCLK_A	TIM15_CH2	EVENTOUT
	PA4	-	-	DCMI_HSYNC/ PSSI_DE	-	-	SAI1_FS_B	LPTIM2_CH1	EVENTOUT
	PA5	-	-	-	-	-	-	LPTIM2_ETR	EVENTOUT
	PA6	LPUART1_CTS	-	OCTOSPIM_ P1_IO3	LPGPIO1_P2	-	-	TIM16_CH1	EVENTOUT
	PA7	-	-	OCTOSPIM_ P1_IO2	-	-	LPTIM2_CH2	TIM17_CH1	EVENTOUT
	PA8	SDMMC2_D1	-	OTG_HS_SOF	GFXTIM_ FCKCAL	TRACECLK	SAI1_SCK_A	LPTIM2_CH1	EVENTOUT
	PA9	-	-	-	-	-	SAI1_FS_A	TIM15_BKIN	EVENTOUT
	PA10	-	-	OTG_HS_ID	-	-	SAI1_SD_A	TIM17_BKIN	EVENTOUT
	PA11	-	FDCAN1_RX	-	-	-	-	-	EVENTOUT
	PA12	-	FDCAN1_TX	-	-	-	-	-	EVENTOUT

Table 29. Alternate function AF8 to AF15[(1)] (continued)

Port		AF8	AF9	AF10	AF11	AF12	AF13	AF14	AF15
		HSPI1/LCD/ LPUART1/ SDMMC1/2/ UART4/5	CAN1/TSC	CRS/DCMI/ DSI/GFXTIM/ OCTOSPIM_P1/2/ OTG_HS	DSI/FMC/ GFXTIM/ LPGPIO1/ SDMMC2/ UCPD1	COMP1/2/ FMC/SDMMC1/2/ SYS_AF	GFXTIM/ LPTIM2/4/ SAI1/2	FMC/ LPTIM2/3/ TIM2/15/16/17	EVENTOUT
Port A	PA13	-	-	-	-	-	SAI1_SD_B	-	EVENTOUT
	PA14	-	-	OTG_HS_SOF	-	-	SAI1_FS_B	-	EVENTOUT
	PA15	UART4_ RTS/UART4_ DE	-	-	-	-	SAI2_FS_B	-	EVENTOUT
Port B	PB0	-	-	OCTOSPIM_ P1_IO1	LPGPIO1_P9	COMP1_OUT	AUDIOCLK	-	EVENTOUT
	PB1	LPUART1_RTS/ LPUART1_DE	-	OCTOSPIM_ P1_IO0	LPGPIO1_P3	-	-	LPTIM2_IN1	EVENTOUT
	PB2	LCD_B1	-	OCTOSPIM_ P1_DQS	UCPD1_ FRSTX1	-	-	-	EVENTOUT
	PB3	-	-	CRS_SYNC	LPGPIO1_P11	SDMMC2_D2	SAI1_SCK_B	-	EVENTOUT
	PB4	UART5_RTS/ UART5_DE	TSC_G2_IO1	DCMI_D12/ PSSI_D12	LPGPIO1_P12	SDMMC2_D3	SAI1_MCLK_B	TIM17_BKIN	EVENTOUT
	PB5	UART5_CTS	TSC_G2_IO2	DCMI_D10/ PSSI_D10	-	COMP2_OUT	SAI1_SD_B	TIM16_BKIN	EVENTOUT
	PB6	-	TSC_G2_IO3	DCMI_D5/ PSSI_D5	-	-	SAI1_FS_B	TIM16_CH1N	EVENTOUT
	PB7	UART4_CTS	TSC_G2_IO4	DCMI_VSYNC/ PSSI_RDY	GFXTIM_TE/D SI_TE	FMC_NL	-	TIM17_CH1N	EVENTOUT
	PB8	SDMMC1_CKIN	FDCAN1_RX	DCMI_D6/ PSSI_D6	SDMMC2_D4	SDMMC1_D4	SAI1_MCLK_A	TIM16_CH1	EVENTOUT
	PB9	SDMMC1_CDIR	FDCAN1_TX	DCMI_D7/ PSSI_D7	SDMMC2_D5	SDMMC1_D5	SAI1_FS_A	TIM17_CH1	EVENTOUT

Table 29. Alternate function AF8 to AF15[1] (continued)

Port		AF8	AF9	AF10	AF11	AF12	AF13	AF14	AF15
		HSPI1/LCD/ LPUART1/ SDMMC1/2/ UART4/5	CAN1/TSC	CRS/DCMI/ DSI/GFXTIM/ OCTOSPIM_P1/2/ OTG_HS	DSI/FMC/ GFXTIM/ LPGPIO1/ SDMMC2/ UCPD1	COMP1/2/ FMC/SDMMC1/2/ SYS_AF	GFXTIM/ LPTIM2/4/ SAI1/2	FMC/ LPTIM2/3/ TIM2/15/16/17	EVENTOUT
Port B	PB10	LPUART1_RX	TSC_SYNC	OCTOSPIM_ P1_CLK	LPGPIO1_P4	COMP1_OUT	SAI1_SCK_A	-	EVENTOUT
	PB11	LPUART1_TX	-	OCTOSPIM_ P1_NCS	-	COMP2_OUT	-	-	EVENTOUT
	PB12	LPUART1_RTS/ LPUART1_DE	TSC_G1_IO1	OCTOSPIM_ P1_NCLK	-	-	SAI2_FS_A	TIM15_BKIN	EVENTOUT
	PB13	LPUART1_CTS	TSC_G1_IO2	-	-	-	SAI2_SCK_A	TIM15_CH1N	EVENTOUT
	PB14	-	TSC_G1_IO3	-	-	SDMMC2_D0	SAI2_MCLK_A	TIM15_CH1	EVENTOUT
	PB15	-	-	GFXTIM_TE/DSI_ TE	FMC_NBL1	SDMMC2_D1	SAI2_SD_A	TIM15_CH2	EVENTOUT
Port C	PC0	LPUART1_RX	-	-	GFXTIM_ LCKCAL	SDMMC1_D5	SAI2_FS_A	LPTIM2_IN1	EVENTOUT
	PC1	LPUART1_TX	-	OCTOSPIM_ P1_IO4	-	SDMMC2_CK	SAI1_SD_A	-	EVENTOUT
	PC2	-	-	OCTOSPIM_ P1_IO5	LPGPIO1_P5	-	-	-	EVENTOUT
	PC3	-	-	OCTOSPIM_ P1_IO6	-	-	SAI1_SD_A	LPTIM2_ETR	EVENTOUT
	PC4	-	-	OCTOSPIM_ P1_IO7	-	-	-	-	EVENTOUT
	PC5	-	-	-	-	-	-	-	EVENTOUT
	PC6	SDMMC1_ D0DIR	TSC_G4_IO1	DCMI_D0/ PSSI_D0	SDMMC2_D6	SDMMC1_D6	SAI2_MCLK_A	-	EVENTOUT
	PC7	SDMMC1_ D123DIR	TSC_G4_IO2	DCMI_D1/ PSSI_D1	SDMMC2_D7	SDMMC1_D7	SAI2_MCLK_B	LPTIM2_CH2	EVENTOUT

Table 29. Alternate function AF8 to AF15[(1)] (continued)

Port		AF8	AF9	AF10	AF11	AF12	AF13	AF14	AF15
		HSPI1/LCD/ LPUART1/ SDMMC1/2/ UART4/5	CAN1/TSC	CRS/DCMI/ DSI/GFXTIM/ OCTOSPIM_P1/2/ OTG_HS	DSI/FMC/ GFXTIM/ LPGPIO1/ SDMMC2/ UCPD1	COMP1/2/ FMC/SDMMC1/2/ SYS_AF	GFXTIM/ LPTIM2/4/ SAI1/2	FMC/ LPTIM2/3/ TIM2/15/16/17	EVENTOUT
Port C	PC8	LCD_G0	TSC_G4_IO3	DCMI_D2/ PSSI_D2	-	SDMMC1_D0	-	LPTIM3_CH1	EVENTOUT
	PC9	LCD_G1	TSC_G4_IO4	-	-	SDMMC1_D1	-	LPTIM3_CH2	EVENTOUT
	PC10	UART4_TX	TSC_G3_IO2	DCMI_D8/ PSSI_D8	LPGPIO1_P8	SDMMC1_D2	SAI2_SCK_B	-	EVENTOUT
	PC11	UART4_RX	TSC_G3_IO3	DCMI_D4/ PSSI_D4	UCPD1_ FRSTX2	SDMMC1_D3	SAI2_MCLK_B	-	EVENTOUT
	PC12	UART5_TX	TSC_G3_IO4	DCMI_D9/ PSSI_D9	LPGPIO1_P10	SDMMC1_CK	SAI2_SD_B	-	EVENTOUT
	PC13	-	-	-	-	-	-	-	EVENTOUT
	PC14	-	-	-	-	-	-	-	EVENTOUT
	PC15	-	-	-	-	-	-	-	EVENTOUT
Port D	PD0	LCD_B4	FDCAN1_RX	-	-	FMC_D2/FMC_ AD2	-	-	EVENTOUT
	PD1	LCD_B5	FDCAN1_TX	-	-	FMC_D3/FMC_ AD3	-	-	EVENTOUT
	PD2	UART5_RX	TSC_SYNC	DCMI_D11/ PSSI_D11	LPGPIO1_P7	SDMMC1_CMD	LPTIM4_ETR	FMC_A20	EVENTOUT
	PD3	LCD_CLK	-	OCTOSPIM_ P2_NCS	-	FMC_CLK	-	-	EVENTOUT
	PD4	-	-	OCTOSPIM_ P1_IO4	-	FMC_NOE	-	-	EVENTOUT
	PD5	-	-	OCTOSPIM_ P1_IO5	-	FMC_NWE	-	-	EVENTOUT

Table 29. Alternate function AF8 to AF15[(1)] (continued)

Port		AF8	AF9	AF10	AF11	AF12	AF13	AF14	AF15
		HSPI1/LCD/ LPUART1/ SDMMC1/2/ UART4/5	CAN1/TSC	CRS/DCMI/ DSI/GFXTIM/ OCTOSPIM_P1/2/ OTG_HS	DSI/FMC/ GFXTIM/ LPGPIO1/ SDMMC2/ UCPD1	COMP1/2/ FMC/SDMMC1/2/ SYS_AF	GFXTIM/ LPTIM2/4/ SAI1/2	FMC/ LPTIM2/3/ TIM2/15/16/17	EVENTOUT
Port D	PD6	LCD_DE	-	OCTOSPIM_ P1_IO6	SDMMC2_CK	FMC_NWAIT	SAI1_SD_A	-	EVENTOUT
	PD7	-	-	OCTOSPIM_ P1_IO7	SDMMC2_CMD	FMC_NCE/ FMC_NE1	LPTIM4_OUT	-	EVENTOUT
	PD8	LCD_R3	-	DCMI_HSYNC/ PSSI_DE	-	FMC_D13/FMC_ AD13	-	-	EVENTOUT
	PD9	LCD_R4	-	DCMI_PIXCLK/ PSSI_PDCK	-	FMC_D14/FMC_ AD14	SAI2_MCLK_A	LPTIM3_IN1	EVENTOUT
	PD10	LCD_R5	TSC_G6_IO1	-	-	FMC_D15/FMC_ AD15	SAI2_SCK_A	LPTIM3_ETR	EVENTOUT
	PD11	LCD_R6	TSC_G6_IO2	-	-	FMC_CLE/ FMC_A16	SAI2_SD_A	LPTIM2_ETR	EVENTOUT
	PD12	LCD_R7	TSC_G6_IO3	-	-	FMC_ALE/ FMC_A17	SAI2_FS_A	LPTIM2_IN1	EVENTOUT
	PD13	LCD_VSYNC	TSC_G6_IO4	-	LPGPIO1_P6	FMC_A18	LPTIM4_IN1	LPTIM2_CH1	EVENTOUT
	PD14	LCD_B2	-	-	-	FMC_D0/FMC_ AD0	-	LPTIM3_CH1	EVENTOUT
	PD15	LCD_B3	-	-	-	FMC_D1/FMC_ AD1	-	LPTIM3_CH2	EVENTOUT
Port E	PE0	LCD_HSYNC	-	DCMI_D2/ PSSI_D2	LPGPIO1_P13	FMC_NBL0	-	TIM16_CH1	EVENTOUT
	PE1	LCD_VSYNC	-	DCMI_D3/ PSSI_D3	-	FMC_NBL1	-	TIM17_CH1	EVENTOUT
	PE2	LCD_R0	TSC_G7_IO1	-	LPGPIO1_P14	FMC_A23	SAI1_MCLK_A	-	EVENTOUT
	PE3	LCD_R1	TSC_G7_IO2	-	LPGPIO1_P15	FMC_A19	SAI1_SD_B	-	EVENTOUT

Table 29. Alternate function AF8 to AF15[(1)] (continued)

Port		AF8	AF9	AF10	AF11	AF12	AF13	AF14	AF15
		HSPI1/LCD/ LPUART1/ SDMMC1/2/ UART4/5	CAN1/TSC	CRS/DCMI/ DSI/GFXTIM/ OCTOSPIM_P1/2/ OTG_HS	DSI/FMC/ GFXTIM/ LPGPIO1/ SDMMC2/ UCPD1	COMP1/2/ FMC/SDMMC1/2/ SYS_AF	GFXTIM/ LPTIM2/4/ SAI1/2	FMC/ LPTIM2/3/ TIM2/15/16/17	EVENTOUT
Port E	PE4	LCD_B0	TSC_G7_IO3	DCMI_D4/ PSSI_D4	-	FMC_A20	SAI1_FS_A	-	EVENTOUT
	PE5	LCD_G0	TSC_G7_IO4	DCMI_D6/ PSSI_D6	-	FMC_A21	SAI1_SCK_A	-	EVENTOUT
	PE6	LCD_G1	-	DCMI_D7/ PSSI_D7	-	FMC_A22	SAI1_SD_A	-	EVENTOUT
	PE7	LCD_B6	-	-	-	FMC_D4/FMC_ AD4	SAI1_SD_B	-	EVENTOUT
	PE8	LCD_B7	-	-	-	FMC_D5/FMC_ AD5	SAI1_SCK_B	-	EVENTOUT
	PE9	LCD_G2	-	OCTOSPIM_ P1_NCLK	-	FMC_D6/FMC_ AD6	SAI1_FS_B	-	EVENTOUT
	PE10	LCD_G3	TSC_G5_IO1	OCTOSPIM_ P1_CLK	-	FMC_D7/FMC_ AD7	SAI1_MCLK_B	-	EVENTOUT
	PE11	LCD_G4	TSC_G5_IO2	OCTOSPIM_ P1_NCS	-	FMC_D8/FMC_ AD8	-	-	EVENTOUT
	PE12	LCD_G5	TSC_G5_IO3	OCTOSPIM_ P1_IO0	-	FMC_D9/FMC_ AD9	-	-	EVENTOUT
	PE13	LCD_G6	TSC_G5_IO4	OCTOSPIM_ P1_IO1	-	FMC_D10/FMC_ AD10	-	-	EVENTOUT
	PE14	LCD_G7	-	OCTOSPIM_ P1_IO2	-	FMC_D11/FMC_ AD11	GFXTIM_ LCKCAL	-	EVENTOUT
	PE15	LCD_R2	-	OCTOSPIM_P1_I O3	-	FMC_D12/FMC_ AD12	GFXTIM_FCKC AL	-	EVENTOUT

Table 29. Alternate function AF8 to AF15[1] (continued)

Port		AF8	AF9	AF10	AF11	AF12	AF13	AF14	AF15
		HSPI1/LCD/ LPUART1/ SDMMC1/2/ UART4/5	CAN1/TSC	CRS/DCMI/ DSI/GFXTIM/ OCTOSPIM_P1/2/ OTG_HS	DSI/FMC/ GFXTIM/ LPGPIO1/ SDMMC2/ UCPD1	COMP1/2/ FMC/SDMMC1/2/ SYS_AF	GFXTIM/ LPTIM2/4/ SAI1/2	FMC/ LPTIM2/3/ TIM2/15/16/17	EVENTOUT
Port F	PF0	-	-	-	-	FMC_A0	-	-	EVENTOUT
	PF1	-	-	-	-	FMC_A1	-	-	EVENTOUT
	PF2	-	-	-	-	FMC_A2	-	-	EVENTOUT
	PF3	UART5_TX	-	-	-	FMC_A3	-	-	EVENTOUT
	PF4	UART5_RX	-	-	-	FMC_A4	-	-	EVENTOUT
	PF5	-	-	-	-	FMC_A5	-	-	EVENTOUT
	PF6	-	-	OCTOSPIM_ P1_IO3	-	-	SAI1_SD_B	-	EVENTOUT
	PF7	-	FDCAN1_RX	OCTOSPIM_ P1_IO2	-	-	SAI1_MCLK_B	-	EVENTOUT
	PF8	-	FDCAN1_TX	OCTOSPIM_ P1_IO0	-	-	SAI1_SCK_B	-	EVENTOUT
	PF9	-	-	OCTOSPIM_ P1_IO1	-	-	SAI1_FS_B	TIM15_CH1	EVENTOUT
	PF10	-	-	DCMI_D11/ PSSI_D11	GFXTIM_TE/ DSI_TE	-	SAI1_D3	TIM15_CH2	EVENTOUT
	PF11	LCD_DE	-	DCMI_D12/ PSSI_D12	GFXTIM_TE/ DSI_TE	-	LPTIM4_IN1	-	EVENTOUT
	PF12	LCD_B0	-	-	-	FMC_A6	LPTIM4_ETR	-	EVENTOUT
	PF13	LCD_B1	-	-	UCPD1_ FRSTX2	FMC_A7	LPTIM4_OUT	-	EVENTOUT
	PF14	LCD_G0	TSC_G8_IO1	-	-	FMC_A8	-	-	EVENTOUT
	PF15	LCD_G1	TSC_G8_IO2	-	-	FMC_A9	-	-	EVENTOUT

Table 29. Alternate function AF8 to AF15[1] (continued)

Port		AF8	AF9	AF10	AF11	AF12	AF13	AF14	AF15
		HSPI1/LCD/ LPUART1/ SDMMC1/2/ UART4/5	CAN1/TSC	CRS/DCMI/ DSI/GFXTIM/ OCTOSPIM_P1/2/ OTG_HS	DSI/FMC/ GFXTIM/ LPGPIO1/ SDMMC2/ UCPD1	COMP1/2/ FMC/SDMMC1/2/ SYS_AF	GFXTIM/ LPTIM2/4/ SAI1/2	FMC/ LPTIM2/3/ TIM2/15/16/17	EVENTOUT
Port G	PG0	-	TSC_G8_IO3	-	-	FMC_A10	-	-	EVENTOUT
	PG1	-	TSC_G8_IO4	-	-	FMC_A11	-	-	EVENTOUT
	PG2	-	-	-	-	FMC_A12	SAI2_SCK_B	-	EVENTOUT
	PG3	-	-	-	-	FMC_A13	SAI2_FS_B	-	EVENTOUT
	PG4	-	-	-	-	FMC_A14	SAI2_MCLK_B	-	EVENTOUT
	PG5	LPUART1_CTS	-	-	GFXTIM_TE/ DSI_TE	FMC_A15	SAI2_SD_B	-	EVENTOUT
	PG6	LPUART1_RTS/ LPUART1_DE	-	-	UCPD1_ FRSTX1	-	-	-	EVENTOUT
	PG7	LPUART1_TX	-	-	UCPD1_ FRSTX2	FMC_INT	SAI1_MCLK_A	-	EVENTOUT
	PG8	LPUART1_RX	-	-	-	-	-	-	EVENTOUT
	PG9	-	-	-	-	FMC_NCE/ FMC_NE2	SAI2_SCK_A	TIM15_CH1N	EVENTOUT
	PG10	-	-	-	-	FMC_NE3	SAI2_FS_A	TIM15_CH1	EVENTOUT
	PG11	-	-	-	-	-	SAI2_MCLK_A	TIM15_CH2	EVENTOUT
	PG12	-	-	-	-	FMC_NE4	SAI2_SD_A	-	EVENTOUT
	PG13	LCD_R0	-	-	-	FMC_A24	-	-	EVENTOUT
	PG14	LCD_R1	-	-	-	FMC_A25	-	-	EVENTOUT
	PG15	-	-	DCMI_D13/ PSSI_D13	-	-	-	-	EVENTOUT
Port H	PH0	-	-	-	-	-	-	-	EVENTOUT

Table 29. Alternate function AF8 to AF15[(1)] (continued)

Port		AF8	AF9	AF10	AF11	AF12	AF13	AF14	AF15
		HSPI1/LCD/ LPUART1/ SDMMC1/2/ UART4/5	CAN1/TSC	CRS/DCMI/ DSI/GFXTIM/ OCTOSPIM_P1/2/ OTG_HS	DSI/FMC/ GFXTIM/ LPGPIO1/ SDMMC2/ UCPD1	COMP1/2/ FMC/SDMMC1/2/ SYS_AF	GFXTIM/ LPTIM2/4/ SAI1/2	FMC/ LPTIM2/3/ TIM2/15/16/17	EVENTOUT
Port H	PH1	-	-	-	-	-	-	-	EVENTOUT
	PH2	-	-	-	-	-	-	-	EVENTOUT
	PH3	-	-	-	-	-	-	-	EVENTOUT
	PH4	-	-	PSSI_D14	-	-	-	-	EVENTOUT
	PH5	-	-	DCMI_PIXCLK/ PSSI_PDCK	-	-	-	-	EVENTOUT
	PH6	-	-	DCMI_D8/ PSSI_D8	-	-	-	-	EVENTOUT
	PH7	-	-	DCMI_D9/ PSSI_D9	-	-	-	-	EVENTOUT
	PH8	-	-	DCMI_HSYNC/ PSSI_DE	-	-	-	-	EVENTOUT
	PH9	HSPI1_NCS	-	DCMI_D0/ PSSI_D0	-	-	-	-	EVENTOUT
	PH10	HSPI1_IO0	-	DCMI_D1/ PSSI_D1	-	-	-	-	EVENTOUT
	PH11	HSPI1_IO1	-	DCMI_D2/ PSSI_D2	-	-	-	-	EVENTOUT
	PH12	HSPI1_IO2	-	DCMI_D3/ PSSI_D3	-	-	-	-	EVENTOUT
	PH13	HSPI1_IO3	FDCAN1_TX	-	-	-	-	-	EVENTOUT
	PH14	HSPI1_IO4	FDCAN1_RX	DCMI_D4/ PSSI_D4	-	-	-	-	EVENTOUT

Table 29. Alternate function AF8 to AF15[(1)] (continued)

Port		AF8	AF9	AF10	AF11	AF12	AF13	AF14	AF15
		HSPI1/LCD/ LPUART1/ SDMMC1/2/ UART4/5	CAN1/TSC	CRS/DCMI/ DSI/GFXTIM/ OCTOSPIM_P1/2/ OTG_HS	DSI/FMC/ GFXTIM/ LPGPIO1/ SDMMC2/ UCPD1	COMP1/2/ FMC/SDMMC1/2/ SYS_AF	GFXTIM/ LPTIM2/4/ SAI1/2	FMC/ LPTIM2/3/ TIM2/15/16/17	EVENTOUT
Port H	PH15	HSPI1_IO5	-	DCMI_D11/ PSSI_D11	-	-	-	-	EVENTOUT
Port I	PI0	HSPI1_IO6	-	DCMI_D13/ PSSI_D13	-	-	-	-	EVENTOUT
	PI1	HSPI1_IO7	-	DCMI_D8/ PSSI_D8	-	-	-	-	EVENTOUT
	PI2	HSPI1_DQS0	-	DCMI_D9/ PSSI_D9	-	-	-	-	EVENTOUT
	PI3	HSPI1_CLK	-	DCMI_D10/ PSSI_D10	-	-	-	-	EVENTOUT
	PI4	HSPI1_NCLK	-	DCMI_D5/ PSSI_D5	-	-	-	-	EVENTOUT
	PI5	-	-	DCMI_VSYNC/ PSSI_RDY	-	-	-	-	EVENTOUT
	PI6	-	-	DCMI_D6/ PSSI_D6	-	-	-	-	EVENTOUT
	PI7	-	-	DCMI_D7/ PSSI_D7	-	-	-	-	EVENTOUT
	PI8	HSPI1_DQS1	-	-	-	-	-	-	EVENTOUT
	PI9	HSPI1_IO8	-	-	-	-	-	-	EVENTOUT
	PI10	HSPI1_IO9	-	-	-	-	-	-	EVENTOUT
	PI11	HSPI1_IO10	-	-	-	-	-	-	EVENTOUT
	PI12	HSPI1_IO11	-	-	-	-	-	-	EVENTOUT
	PI13	HSPI1_IO12	-	-	-	-	-	-	EVENTOUT

Table 29. Alternate function AF8 to AF15[1] (continued)

Port		AF8	AF9	AF10	AF11	AF12	AF13	AF14	AF15
		HSPI1/LCD/ LPUART1/ SDMMC1/2/ UART4/5	CAN1/TSC	CRS/DCMI/ DSI/GFXTIM/ OCTOSPIM_P1/2/ OTG_HS	DSI/FMC/ GFXTIM/ LPGPIO1/ SDMMC2/ UCPD1	COMP1/2/ FMC/SDMMC1/2/ SYS_AF	GFXTIM/ LPTIM2/4/ SAI1/2	FMC/ LPTIM2/3/ TIM2/15/16/17	EVENTOUT
Port I	PI14	HSPI1_IO13	-	-	-	-	-	-	EVENTOUT
	PI15	HSPI1_IO14	-	-	-	-	-	-	EVENTOUT
Port J	PJ0	HSPI1_IO15	-	-	-	-	-	-	EVENTOUT
	PJ1	-	-	-	-	-	-	-	EVENTOUT
	PJ2	-	-	-	-	-	-	-	EVENTOUT
	PJ3	-	-	-	-	-	-	-	EVENTOUT
	PJ4	-	-	-	-	-	-	-	EVENTOUT
	PJ5	-	-	-	-	-	-	-	EVENTOUT
	PJ6	-	-	-	-	-	-	-	EVENTOUT
	PJ7	-	-	-	-	-	-	-	EVENTOUT
	PJ8	-	-	-	-	-	-	-	EVENTOUT
	PJ9	-	-	-	-	-	-	-	EVENTOUT
	PJ10	-	-	-	-	-	-	-	EVENTOUT
	PJ11	-	-	-	-	-	-	-	EVENTOUT

1. For AF0 to AF7, refer to the previous table.

5 Electrical characteristics

5.1 Parameter conditions

Unless otherwise specified, all voltages are referenced to V_{SS}.

5.1.1 Minimum and maximum values

Unless otherwise specified, the minimum and maximum values are guaranteed in the worst conditions of ambient temperature, supply voltage, and frequencies by tests in production on 100% of the devices with an ambient temperature at T_A = 25 °C and T_A = $T_A$max (given by the selected temperature range).

Data based on characterization results, design simulation and/or technology characteristics are indicated in the table footnotes, and are not tested in production. Based on characterization, the minimum and maximum values refer to sample tests and represent the mean value plus or minus three times the standard deviation (mean ±3σ).

5.1.2 Typical values

Unless otherwise specified, typical data are based on T_A = 25 °C, V_{DD} = V_{DDA} = 3 V. They are given only as design guidelines and are not tested.

Typical ADC accuracy values are determined by characterization of a batch of samples from a standard diffusion lot over the full temperature range, where 95% of the devices have an error less than or equal to the value indicated (mean ±2σ).

5.1.3 Typical curves

Unless otherwise specified, all typical curves are given only as design guidelines and are not tested.

5.1.4 Loading capacitor

The loading conditions used for pin parameter measurement are shown in *Figure 13*.

5.1.5 Pin input voltage

The input voltage measurement on a pin of the device is described in *Figure 14*.

Figure 13. Pin loading conditions

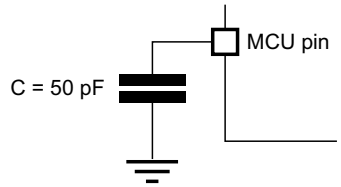

Figure 14. Pin input voltage

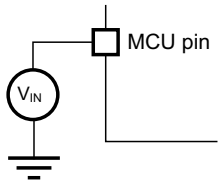

5.1.6 Power supply scheme

Each power supply pair (such as V_{DD}/V_{SS} or V_{DDA}/V_{SSA}) must be decoupled with filtering ceramic capacitors as shown in *Figure 15* and *Figure 16*. These capacitors must be placed

as close as possible to, or below, the appropriate pins on the underside of the PCB to ensure the proper functionality of the device.

Figure 15. STM32U5Gxxx power supply scheme (without SMPS)

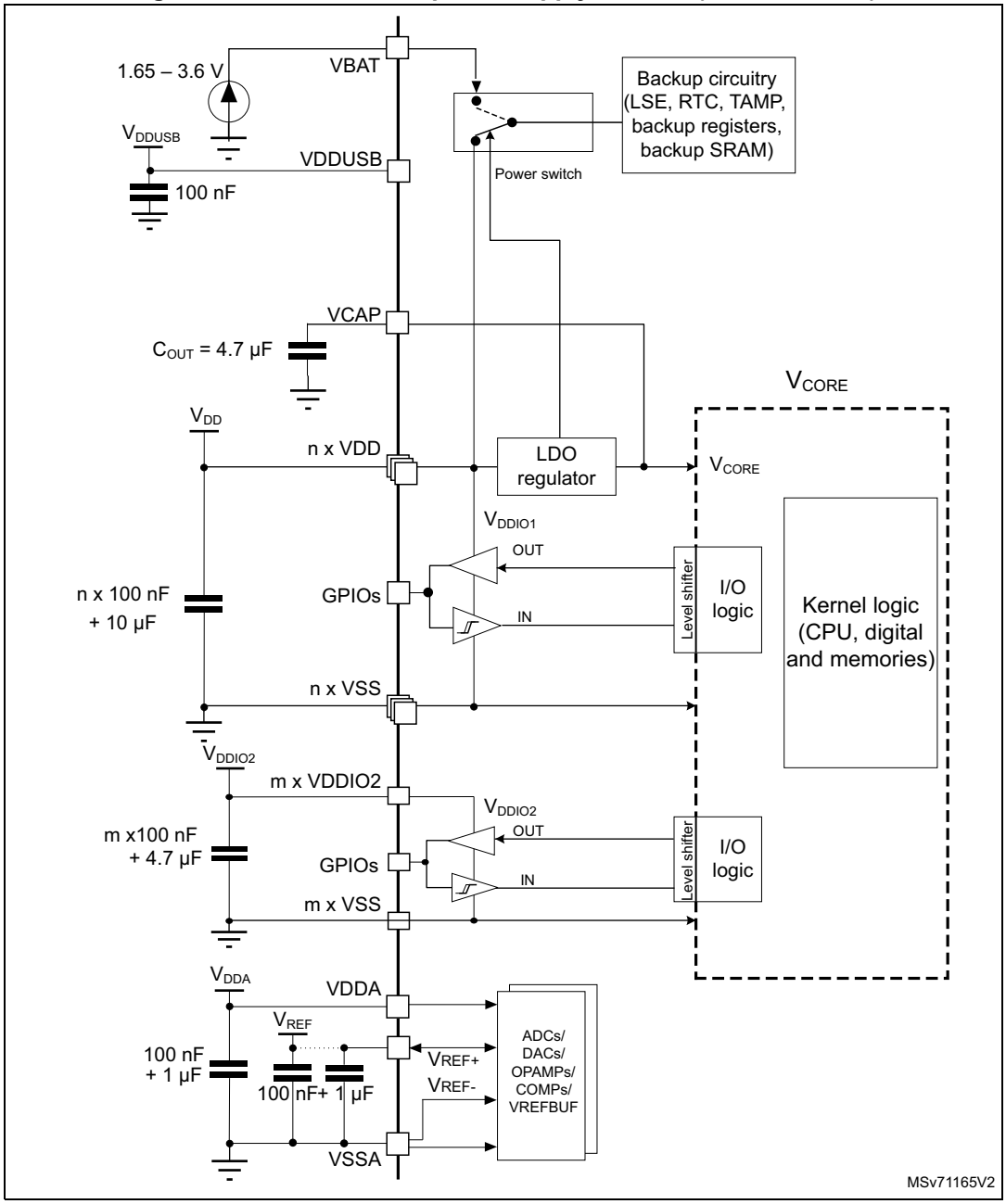

Figure 16. STM32U5GxxxxxQ power supply scheme (with SMPS)

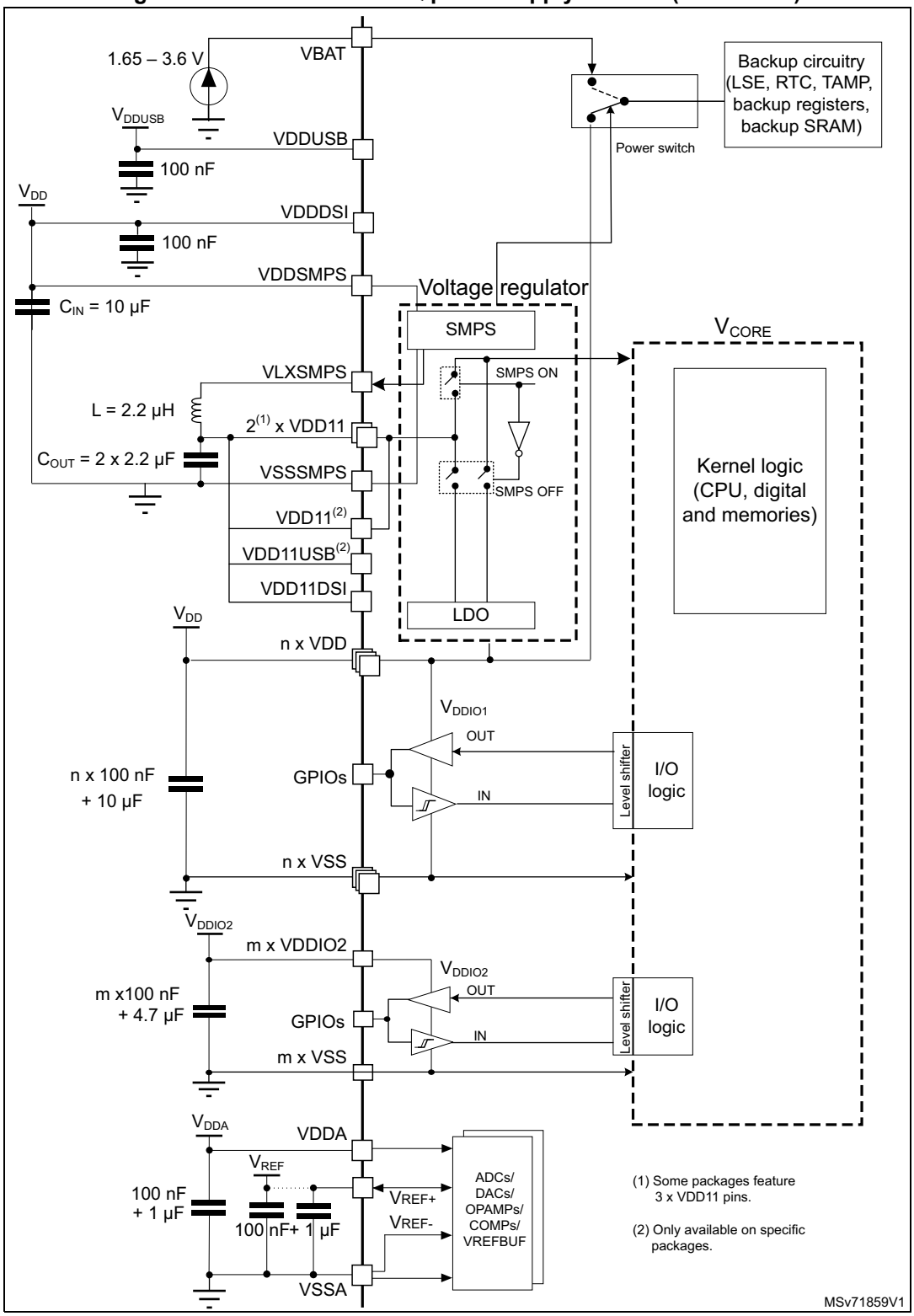

The external capacitor on VCAP pin requires the following characteristics:

- C_{OUT} = 4.7 µF or 2 × 2.2 µF ±20%
- C_{OUT} ESR < 20 mΩ at 3 MHz
- C_{OUT} rated voltage ≥ 10 V

Note: SMPS and LDO regulators provide, in a concurrent way, the V_{CORE} supply depending on application requirements. However, only one of them is active at the same time. When SMPS is active, it feeds the V_{CORE} on the two VDD11 pins supplied by the filtered SMPS VLXSMPS output pin. When LDO is active, it supplies the V_{CORE} and regulates it using the same capacitors on VDD11 pins. It is recommended to add a decoupling capacitor of 100 nF near each VDD11 pin/ball, but it is not mandatory.

The external capacitors on VDD11 pins require the following characteristics:

- C_{OUT} = 2 × 2.2 µF ±20%
- C_{OUT} ESR < 20 mΩ at 3 MHz
- C_{OUT} rated voltage ≥ 10 V

The external capacitor on VDDSMPS pin requires the following characteristics:

- C_{IN} = 10 µF ±20%
- C_{IN} ESR < 10 mΩ at 3 MHz
- C_{IN} rated voltage ≥ 10 V

The external inductance between VLXSMPS and VDD11 requires the following characteristics:

- L = 2.2 µH ±20%
- L_{ISAT} > 0.5 A
- L DCR < 200 mΩ

5.1.7 Current consumption measurement

The I_{DD} parameters given in various tables in the next sections, represent the total MCU consumption including the current supplying V_{DD}, V_{DDIO2}, V_{DDA}, V_{DDUSB}, V_{DDDSI}, V_{BAT}, and V_{DDSMPS} (if the device embeds the SMPS).

Figure 17. Current consumption measurement

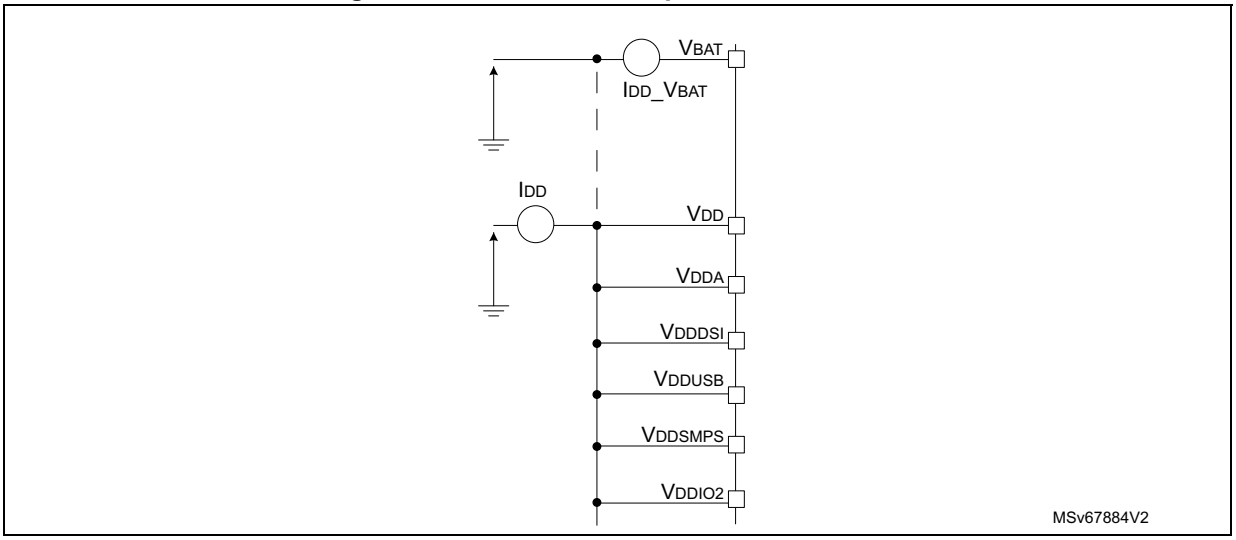

5.2 Absolute maximum ratings

Stresses above the absolute maximum ratings listed in *Table 30*, *Table 31*, and *Table 32* may damage the device. These are stress ratings only and the functional operation of the device at these conditions is not implied. Exposure to maximum rating conditions for extended periods may affect device reliability. Device mission profile (application conditions) is compliant with JEDEC JESD47 qualification standard, extended mission profiles are available on demand.

Table 30. Voltage characteristics(1) (2)

Symbol	Ratings	Min	Max	Unit
$V_{DDX} - V_{SS}$	External main supply voltage (including V_{DDSMPS}, V_{DDA}, V_{DDUSB}, V_{DDDSI}, V_{BAT}, V_{REF+})	-0.3	4.0	V
V_{DDIOx}(3) $- V_{SS}$	I/O supply when HSLV = 0	-0.3	4.0	
	I/O supply when HSLV = 1	-0.3	2.75	
V_{IN}(4)	Input voltage on FT_xx pins except FT_c pins	V_{SS} - 0.3	Min (min (V_{DD}, V_{DDA}, V_{DDUSB}, V_{DDIO2}) + 4.0, 6.0)(5)(6)	
	Input voltage on FT_t pins in V_{BAT} mode	V_{SS} - 0.3	Min (min (V_{BAT}, V_{DDA}, V_{DDUSB}, V_{DDIO2}) + 4.0, 6.0)(5)(6)	
	Input voltage on FT_c pins	V_{SS} - 0.3	5.5	
	Input voltage on any other pins	V_{SS} - 0.3	4.0	
$V_{REF+} - V_{DDA}$	Allowed voltage difference for $V_{REF+} > V_{DDA}$	-	0.4	
$\|\Delta V_{DDx}\|$	Variations between different VDDx power pins of the same domain	-	50.0	mV
$\|V_{SSx}-V_{SS}\|$	Variations between all the different ground pins(7)	-	50.0	

1. All main power (VDD, VDDSMPS, VDDA, VDDUSB, VDDIO2, VDDDSI, VBAT) and ground (VSS, VSSA, VSSSMPS) pins must always be connected to the external power supply, in the permitted range.
2. The I/O structure options listed in this table can be a concatenation of options including the option explicitly listed. For instance TT_a refers to any TT I/O with _a option. TT_xx refers to any TT I/O and FT_xx refers to any FT I/O.
3. V_{DDIO1} or V_{DDIO2} or V_{SW}, $V_{DDIO1} = V_{DD}$.
4. V_{IN} maximum must always be respected. Refer to *Table 31* for the maximum allowed injected current values.
5. To sustain a voltage higher than 4 V, the internal pull-up/pull-down resistors must be disabled.
6. This formula has to be applied only on the power supplies related to the I/O structure described in the pin definition table.
7. Including VREF- pin.

Table 31. Current characteristics

Symbol	Ratings	Max	Unit
$\sum IV_{DD}$	Total current into sum of all V_{DD} power lines (source)(1)	200	mA
$\sum IV_{SS}$	Total current out of sum of all V_{SS} ground lines (sink)(1)	200	
IV_{DD}	Maximum current into each VDD power pin (source)(1)	100	
IV_{SS}	Maximum current out of each VSS ground pin (sink)(1)	100	
I_{IO}	Output current sunk by any I/O and control pin	20	
	Output current sourced by any I/O and control pin	20	
$\sum I_{(PIN)}$	Total output current sunk by sum of all I/Os and control pins(2)	120	
	Total output current sourced by sum of all I/Os and control pins(2)	120	
$I_{INJ(PIN)}$(3)(4)	Injected current on FT_xx, TT_xx, RST pins	-5/+0	
$\sum \lvert I_{INJ(PIN)} \rvert$	Total injected current (sum of all I/Os and control pins)(5)	±25	

1. All main power (VDD, VDDSMPS, VDDA, VDDUSB, VDDDSI, VDDIO2, VBAT) and ground (VSS, VSSA, VSSSMPS) pins must always be connected to the external power supplies, in the permitted range.
2. This current consumption must be correctly distributed over all I/Os and control pins. The total output current must not be sunk/sourced between two consecutive power supply pins, referring to high pin count QFP packages.
3. Positive injection (when $V_{IN} > V_{DDIOx}$) is not possible on these I/Os and does not occur for input voltages lower than the specified maximum value.
4. A negative injection is induced by $V_{IN} < V_{SS}$. $I_{INJ(PIN)}$ must never be exceeded. Refer also to *Table 30* for the minimum allowed input voltage values.
5. When several inputs are submitted to a current injection, the maximum $\sum \lvert I_{INJ(PIN)} \rvert$ is the absolute sum of the negative injected currents (instantaneous values).

Table 32. Thermal characteristics

Symbol	Ratings	Value	Unit
T_{STG}	Storage temperature range	–65 to +150	°C
T_J	Maximum junction temperature	140	

5.3 Operating conditions

5.3.1 General operating conditions

Table 33. General operating conditions

Symbol	Parameter	Conditions	Min	Typ	Max	Unit
V_{DD}	Standard operating voltage	HSLV[1] = 0	1.71[2]	-	3.6	V
		HSLV = 1	1.71[2]	-	2.7	
V_{DDSMPS}	Supply voltage for the internal SMPS step-down converter	-	V_{DD}			
V_{DDIO2}	Supply voltage for PG[15:2] I/Os	At least one I/O in PG[15:2] used, HSLV = 0	1.08	-	3.6	
		At least one I/O in PG[15:2] used, HSLV = 1	1.08	-	2.7	
		PG[15:2] I/Os not used	0	-	3.6	
V_{DDUSB}	USB supply voltage	USB used	3.0	-	3.6	
		USB not used	0	-	3.6	
V_{DDA}	Analog supply voltage	COMP used	1.58	-	3.6	V
		DAC or OPAMP used	1.60	-	3.6	
		ADC used	1.62	-	3.6	
		VREFBUF used (normal mode)	1.8	-	3.6	
		ADC, DAC, COMP, OPAMP, and VREFBUF not used	0	-	3.6	
V_{BAT}	Backup domain supply voltage	-	1.65[3]	-	3.6	
V_{IN}	I/O input voltage	All I/Os except FT_c and TT_xx pins	-0.3	-	Min (min(V_{DD}, V_{DDA}, V_{DDUSB}, V_{DDIO2}) +3.6, 5.5)[4][5]	
		Input voltage on FT_t pins in V_{BAT} mode	-0.3	-	Min (min(V_{BAT}, V_{DDA}, V_{DDUSB}, V_{DDIO2}) + 3.6, 5.5)[4][5]	
		FT_c I/Os	-0.3	-	5.0	
		TT_xx I/Os	-0.3	-	V_{DDIOx} + 0.3	
I_{IO_SW}	Sum of output current sourced by all I/Os powered by V_{SW}[6]	-	-	-	3	mA

Table 33. General operating conditions (continued)

Symbol	Parameter	Conditions	Min	Typ	Max	Unit
V_{CORE}	Internal regulator ON	Range 1	1.15	1.21	1.27	V
		Range 2	1.05	1.1	1.15	
		Range 3	0.95	1.0	1.05	
		Range 4	0.81	0.9	0.99	
f_{HCLK}	AHB clock frequency	Range 1	-	-	160	MHz
		Range 2	-	-	110	
		Range 3	-	-	55	
		Range 4	-	-	25	
f_{PCLKx} (x = 1, 2, 3)	APB1, APB2, APB3 clock frequency	Range 1	-	-	160	
		Range 2	-	-	110	
		Range 3	-	-	55	
		Range 4	-	-	25	
P_D	Power dissipation at T_A = 85 °C for suffix 6(7)	LQFP100	See *Section 6.6: Package thermal characteristics* for application appropriate thermal resistance and package. The power dissipation is then calculated according to ambient temperature (T_A) and maximum junction temperature (T_J) and selected thermal resistance.			mW
		LQFP144				
		UFBGA144				
		WLCSP208				
		TFBGA216				
P_D	Power dissipation at T_A = 125 °C for suffix 3(7)	LQFP100				
		LQFP144				
		UFBGA144				
		WLCSP208				
		TFBGA216				
T_A	Ambient temperature for suffix 6	Maximum power dissipation	–40	-	85	°C
		Low-power dissipation(8)	–40	-	105	
	Ambient temperature for suffix 3	Maximum power dissipation	–40	-	125	
		Low-power dissipation(8)	–40	-	130	
T_J	Junction temperature range	Suffix 6 version	–40	-	105	
		Suffix 3 version	–40	-	130	

1. HSLV means high-speed low-voltage mode (refer to the GPIO section of the product reference manual).
2. When RESET is released, the functionality is guaranteed down to V_{BORx} min.
3. In V_{BAT} mode, the functionality is guaranteed down to V_{BOR_VBAT} min.
4. This formula has to be applied only on the power supplies related to the I/O structure described by the pin definition table. The maximum I/O input voltage is the smallest value between Min (V_{DD}, V_{DDA}, V_{DDUSB}, V_{DDIO2})+3.6 V, and 5.5V.
5. For operation with voltage higher than Min (V_{DD}, V_{DDA}, V_{DDUSB}, V_{DDIO2}) +0.3 V, the internal pull-up and pull-down resistors must be disabled.

6. The I/Os powered by V_{SW} are:
   - PC13, PC14, PC15 when VDD is present.
   - PC13, PC14, PC15, and all FT_t I/Os in V_{BAT} mode.
7. If T_A is lower, higher P_D values are allowed as long as T_J does not exceed T_J max (see *Section 6.6: Package thermal characteristics*).
8. In low-power dissipation state, T_A can be extended to this range as long as T_J does not exceed T_J max (see *Section 6.6: Package thermal characteristics*).

5.3.2 Operating conditions at power-up/power-down

The parameters given in the table below are derived from tests performed under the ambient temperature condition summarized in *Table 33*.

Table 34. Operating conditions at power-up/power-down

Symbol	Parameter	Conditions	Min	Max	Unit
t_{VDD}	V_{DD} rise-time rate	-	0	∞	µs/V
	V_{DD} fall-time rate	ULPMEN = 0 (default value)	20	∞	
		Standby mode, BOR level 0 selected with ULPMEN = 1	250	∞	ms/V

5.3.3 Embedded reset and power control block characteristics

The parameters given in the table below are derived from tests performed under the ambient temperature conditions summarized in *Table 33*.

Table 35. Embedded reset and power control block characteristics(1)

Symbol	Parameter	Conditions	Min	Typ	Max	Unit
$t_{RSTTEMPO}$(2)	Reset temporization after BOR0 is detected	V_{DD} rising	-	-	900	µs
V_{BOR0}	Brownout reset threshold 0	Rising edge	1.6	1.66	1.71	V
		Falling edge, range 1, 2, 3	1.58	1.64	1.69	
		Falling edge, range 4 and low-power modes	1.58	1.64	1.69	
V_{BOR1}	Brownout reset threshold 1	Rising edge	1.98	2.08	2.17	
		Falling edge	1.9	2.00	2.1	
V_{BOR2}	Brownout reset threshold 2	Rising edge	2.18	2.29	2.39	
		Falling edge	2.08	2.18	2.25	

Table 35. Embedded reset and power control block characteristics(1) (continued)

Symbol	Parameter	Conditions	Min	Typ	Max	Unit
V_{BOR3}	Brownout reset threshold 3	Rising edge	2.48	2.59	2.7	V
		Falling edge	2.39	2.5	2.61	
V_{BOR4}	Brownout reset threshold 4	Rising edge	2.76	2.88	3.0	
		Falling edge	2.67	2.79	2.9	
V_{PVD0}	Programmable voltage detector threshold 0	Rising edge	2.03	2.13	2.23	
		Falling edge	1.93	2.03	2.12	
V_{PVD1}	PVD threshold 1	Rising edge	2.18	2.29	2.39	
		Falling edge	2.08	2.18	2.28	
V_{PVD2}	PVD threshold 2	Rising edge	2.33	2.44	2.55	
		Falling edge	2.23	2.34	2.44	
V_{PVD3}	PVD threshold 3	Rising edge	2.47	2.59	2.7	
		Falling edge	2.39	2.50	2.61	
V_{PVD4}	PVD threshold 4	Rising edge	2.6	2.72	2.83	
		Falling edge	2.5	2.62	2.73	
V_{PVD5}	PVD threshold 5	Rising edge	2.76	2.88	3.0	
		Falling edge	2.66	2.78	2.9	
V_{PVD6}	PVD threshold 6	Rising edge	2.83	2.96	3.08	
		Falling edge	2.76	2.88	3.0	
V_{hyst_BOR0}	Hysteresis voltage of BOR0	-	-	20	-	mV
$V_{hyst_BOR_PVD}$	Hysteresis voltage of BOR (except BOR0) and PVD	-	-	80	-	
$t_{BOR0_sampling}$	BOR0 sampling period	ULPMEN = 1	-	30	55	ms
I_{DD_BOR0}(2)	Additional BOR0 consumption if ULPMEN = 0 versus ULPMEN = 1	Standby mode	-	60	-	nA
$I_{DD_BOR_PVD}$(2)	BOR(3) (except BOR0) and PVD consumption from V_{DD}(4)	-	-	1	1.5	µA
V_{BOR_VBAT}	V_{BAT} brownout reset threshold	-	1.58	-	1.65	V
$t_{VBAT_BOR_sampling}$	V_{BAT} BOR sampling period in V_{BAT} mode	MONEN = 0(5)	-	0.5	2.5	s
V_{AVM1}	V_{DDA} voltage monitor 1 threshold	Rising edge	1.61	1.68	1.75	V
		Falling edge	1.58	1.65	1.71	
V_{AVM2}	V_{DDA} voltage monitor 2 threshold	Rising edge	1.77	1.86	1.95	
		Falling edge	1.73	1.82	1.9	
V_{IO2VM}	V_{DDIO2} voltage monitor threshold	-	0.96	1.01	1.05	
V_{UVM}	V_{DDUSB} voltage monitor threshold	-	1.15	1.22	1.28	
V_{hyst_AVM}	Hysteresis of V_{DDA} voltage monitor	-	-	40	-	mV

Table 35. Embedded reset and power control block characteristics(1) (continued)

Symbol	Parameter	Conditions	Min	Typ	Max	Unit
I_{DD_VM}(2)	Voltage monitor consumption from V_{DD} (AVM1, AVM2, IO2VM or UVM single instance)	-	-	0.4	0.6	µA
$I_{DD_AVM_A}$(2)	V_{DDA} voltage monitor consumption from V_{DDA} (resistor bridge)	-	-	1.25	1.85	

1. Evaluated by characterization and not tested in production, unless otherwise specified.
2. Specified by design. Not tested in production
3. BOR0 is enabled in all modes (except Shutdown), and its consumption is therefore included in the supply current characteristics tables.
4. This is also the consumption saved in Standby mode when ULPMEN = 1.
5. V_{BAT} brownout reset monitoring is discontinuous when MONEN = 0 in PWR_BDCR1, and is continuous when MONEN = 1.

5.3.4 SMPS characteristics

Table 36. SMPS characteristics

Symbol	Parameter	Conditions	Typ	Unit
Freq	Switching frequency (range 1, 2, 3)(1)	V_{DD} > 1.9 V	3	MHz
		V_{DD} < 1.9 V	1.5	

1. The SMPS is asynchronous in range 4 and low-power modes.

5.3.5 Embedded voltage reference

The parameters given in the table below are derived from tests performed under the ambient temperature and supply voltage conditions summarized in *Table 33*.

Table 37. Embedded internal voltage reference

Symbol	Parameter	Conditions	Min	Typ	Max	Unit
V_{REFINT}(1)	Internal reference voltage	Range 1, 2, 3	1.175	1.215	1.255	V
		Range 4 and low-power modes	1.170	1.215	1.260	
$t_{S_vrefint}$(2)(3)	ADC sampling time when reading the internal reference voltage	-	12.65	-	-	µs
$t_{start_vrefint}$(3)	Start time of reference voltage buffer when the ADC is enabled	-	-	4	6	
$I_{DD(VREFINTBUF)}$(3)	V_{REFINT} buffer consumption from V_{DD} when converted by the ADC	-	-	1.5	2.1	µA
ΔV_{REFINT}(4)	Internal reference voltage spread over the temperature range	V_{DD} = 3 V	-	6	11.5	mV
T_{Coeff}(4)	Average temperature coefficient	–40°C < T_J < +130 °C	-	40	125	ppm/°C
A_{Coeff}(3)	Long term stability	1000 hours, T_J = 25 °C	-	400	1000	ppm
$V_{DDCoeff}$(4)	Average voltage coefficient	3.0 V ≤ V_{DD} ≤ 3.6 V	-	500	2900	ppm/V

Table 37. Embedded internal voltage reference (continued)

Symbol	Parameter	Conditions	Min	Typ	Max	Unit
V_{REFINT_DIV1}(3)	1/4 reference voltage	-	24	25	26	% V_{REFINT}
V_{REFINT_DIV2}(3)	1/2 reference voltage		49	50	51	
V_{REFINT_DIV3}(3)	3/4 reference voltage		74	75	76	

1. V_{REFINT} does not take into account package and soldering effects.
2. The shortest sampling time for the application can be determined by multiple iterations.
3. Specified by design. Not tested in production
4. Evaluated by characterization. Not tested in production.

Figure 18. V_{REFINT} versus temperature

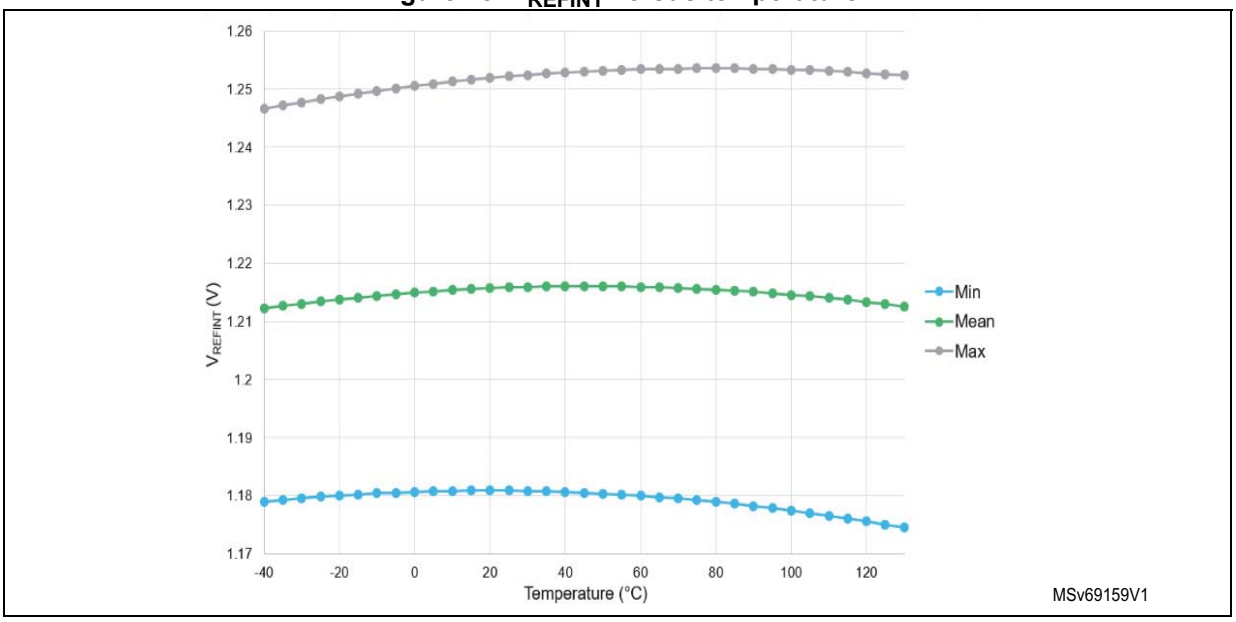

5.3.6 Supply current characteristics

The current consumption is a function of several parameters and factors such as the operating voltage, ambient temperature, I/O pin loading, device software configuration, operating frequencies, I/O pin switching rate, program location in memory and executed binary code.

The current consumption is measured as described in *Section 5.1.7: Current consumption measurement*.

Typical and maximum current consumption

The MCU is placed under the following conditions:

- All I/O pins are in analog input mode.
- All peripherals are disabled except when explicitly mentioned.
- The flash memory access time is adjusted with the minimum wait-state number, depending on the f_{HCLK} frequency (refer to the tables “Number of wait states according to CPU clock (HCLK) frequency” available in the product reference manual).
- When the peripherals are enabled, $f_{PCLK} = f_{HCLK}$.
- The voltage scaling range is adjusted to f_{HCLK} frequency as follows:
  - Voltage range 1 for 110 MHz < f_{HCLK} ≤ 160 MHz
  - Voltage range 2 for 55 MHz < f_{HCLK} ≤ 110 MHz
  - Voltage range 3 for 25 MHz < f_{HCLK} ≤ 55 MHz
  - Voltage range 4 for f_{HCLK} ≤ 25 MHz

The parameters given in the tables below are derived from tests performed under ambient temperature and supply voltage conditions summarized in *Table 33*. These parameters are evaluated by characterization, and not tested in production unless otherwise specified.

Table 38. Current consumption in Run mode on LDO, code with data processing running from flash memory, ICACHE ON in 1-way, prefetch ON(1)

Symbol	Parameter	Conditions			Typ					Max at 1.71 V ≤ V_{DD} ≤ 3.6 V(2)					Unit
		-	Voltage scaling	f_{HCLK} (MHz)	25°C	55°C	85°C	105°C	125°C	30°C	55°C	85°C	105°C	125°C	
I_{DD} (Run)	Supply current in Run mode	$f_{HCLK} = f_{MSI}$, all peripherals disabled, Flash bank 2 in power down, all SRAMs enabled	Range 4	24	2.0	2.85	5.30	9.0	15.5	3.5	5.7	14	24	44	mA
				16	1.55	2.40	4.90	8.5	15.0	3.0	5.2	13	24	44	
				12	1.30	2.15	4.60	8.3	14.5	2.7	4.9	13	24	43	
				4	0.74	1.55	4.05	7.65	14.0	2.1	4.2	12	23	42	
				2	0.61	1.45	3.90	7.55	14.0	1.9	4.1	12	23	42	
				1	0.55	1.35	3.85	7.5	14.0	1.8	4.0	12	23	42	
				0.4	0.50	1.35	3.80	7.45	14.0	1.8	4.0	12	23	42	
				0.1	0.48	1.30	3.80	7.4	14.0	1.8	3.9	12	23	42	
		f_{HCLK} = PLL on HSE 16 MHz in bypass mode, all peripherals disabled, Flash bank 2 in power down, all SRAMs enabled	Range 1	160	14.5	16.0	20.5	27.0	37.5	20	25	42	67	120	
				140	13.0	14.5	19.0	25.5	36.0	18	23	41	66	120	
				120	11.5	13.0	17.5	23.5	34.5	16	21	39	64	110	
			Range 2	110	9.40	10.5	14.5	19.5	28.5	13	17	30	49	82	
				72	6.55	7.90	11.5	16.5	25.5	10	14	27	45	79	
				64	6.0	7.30	11.0	16.0	25.0	8.9	13	26	45	79	
		$f_{HCLK} = f_{HSE}$ bypass mode, all peripherals disabled, Flash bank 2 in power down, all SRAMs enabled	Range 3	55	4.70	5.80	8.80	13.0	21.0	6.9	9.8	20	34	60	
				32	3.10	4.15	7.15	11.5	19.0	5.1	8.0	18	33	58	

1. The current consumption from SRAM is similar.
2. Evaluated by characterization. Not tested in production.

Table 39. Current consumption in Run mode on SMPS, code with data processing running from flash memory, ICACHE ON in 1-way, prefetch ON(1)

Symbol	Parameter	Conditions			Typ at V_{DD} = 1.8 V					Max at 1.71 V ≤ V_{DD} ≤ 3.6 V(2)(3)					Unit
		-	Voltage scaling	f_{HCLK} (MHz)	25°C	55°C	85°C	105°C	125°C	30°C	55°C	85°C	105°C	125°C	
I_{DD} (Run)	Supply current in Run mode	$f_{HCLK} = f_{MSI}$, all peripherals disabled, Flash bank 2 in power-down, all SRAMs enabled	Range 4	24	1.10	1.70	3.15	5.25	9.0	2.1	3.5	8.2	15	27	mA
				16	0.89	1.35	2.90	5.0	8.75	1.8	3.1	7.9	15	27	
				12	0.70	1.20	2.75	4.9	8.60	1.6	2.9	7.7	15	27	
				4	0.43	0.91	2.40	4.55	8.25	1.3	2.5	7.3	15	26	
				2	0.36	0.82	2.35	4.45	8.20	1.2	2.4	7.3	14	26	
				1	0.32	0.77	2.30	4.40	8.15	1.2	2.4	7.2	14	26	
				0.4	0.30	0.74	2.30	4.40	8.15	1.1	2.3	7.2	14	26	
				0.1	0.29	0.72	2.25	4.40	8.10	1.1	2.3	7.2	14	26	
		f_{HCLK} = PLL on HSE 16 MHz in bypass mode, all peripherals disabled, Flash bank 2 in power-down, all SRAMs enabled	Range 1	160	11.0	12.5	16.0	20.5	27.5	15	19	31	48	75	
				140	9.90	11.0	14.5	19.0	26.5	14	17	29	46	74	
				120	8.65	10.0	13.5	18.0	25.0	13	16	28	45	72	
			Range 2	110	6.65	7.55	10.0	13.5	19.5	9.2	12	21	33	54	
				72	4.70	5.60	8.10	11.5	17.5	6.9	9.3	18	31	52	
				64	4.30	5.20	7.65	11.0	17.0	6.5	8.8	18	30	51	
		$f_{HCLK} = f_{HSE}$ bypass mode, all peripherals disabled, Flash bank 2 in power-down, all SRAMs enabled	Range 3	55	3.10	3.80	5.70	8.40	13.0	4.6	6.4	13	22	38	
				32	2.10	2.8	4.65	7.35	12.0	3.4	5.2	12	21	37	

1. The current consumption from SRAM is similar.
2. Evaluated by characterization. Not tested in production.
3. The maximum value is at V_{DD} = 1.71 V in Run mode on SMPS.

Table 40. Current consumption in Run mode on SMPS, code with data processing running from flash memory, ICACHE ON in 1-way, prefetch ON, V_{DD} = 3.0 V(1)

Symbol	Parameter	Conditions			Typ at V_{DD} = 3.0 V					Max at V_{DD} = 3.0 V(2)					Unit
		-	Voltage scaling	f_{HCLK} (MHz)	25°C	55°C	85°C	105°C	125°C	30°C	55°C	85°C	105°C	125°C	
I_{DD} (Run)	Supply current in Run mode	$f_{HCLK} = f_{MSI}$, all peripherals disabled, Flash bank 2 in power-down, all SRAMs enabled	Range 4	24	0.75	1.10	1.95	3.25	5.60	1.30	2.1	4.9	9	16	mA
				16	0.65	0.97	1.80	3.10	5.45	1.20	2.0	4.7	9	16	
				12	0.46	0.87	1.70	3.00	5.35	0.94	1.9	4.6	9	16	
				4	0.30	0.66	1.50	2.80	5.15	0.77	1.7	4.4	8	16	
				2	0.22	0.59	1.45	2.75	5.10	0.68	1.6	4.3	8	16	
				1	0.20	0.52	1.40	2.75	5.05	0.66	1.5	4.2	8	16	
				0.4	0.18	0.48	1.40	2.70	5.05	0.64	1.5	4.2	8	16	
				0.1	0.18	0.47	1.40	2.70	5.05	0.64	1.4	4.2	8	16	
		f_{HCLK} = PLL on HSE 16 MHz in bypass mode, all peripherals disabled, Flash bank 2 in power-down, all SRAMs enabled	Range 1	160	7.40	8.30	10.50	13.5	18.5	9.40	12	19	29	46	
				140	6.65	7.50	9.70	13.0	18.0	8.50	11	18	28	46	
				120	5.85	6.70	8.90	12.0	17.0	7.60	9.8	17	27	45	
			Range 2	110	4.55	5.15	6.80	9.15	13.0	5.90	7.4	13	20	33	
				72	3.30	3.90	5.55	7.80	12.0	4.50	6.0	12	19	32	
				64	3.00	3.60	5.25	7.55	11.50	4.20	5.7	11	19	31	
		$f_{HCLK} = f_{HSE}$ bypass mode, all peripherals disabled, Flash bank 2 in power-down, all SRAMs enabled	Range 3	55	2.25	2.70	3.95	5.75	9.05	3.10	4.2	8	14	24	
				32	1.55	2.00	3.25	5.05	8.30	2.40	3.5	7	13	23	

1. The current consumption from SRAM is similar.
2. Evaluated by characterization. Not tested in production.

Table 41. Static power consumption of flash memory banks when supplied by LDO or SMPS

Symbol	Parameter	Typ					Max					Unit
		25	55	85	105°C	125°C	30°C	55°C	85°C	105°C	125°C	
$I_{DD(Flash_Bank1)}$(1)	Flash bank 1 static consumption in normal mode (PD1 = 1 versus PD1 = 0)	49	53	65	84	120	66	77	98	123	175	µA
$I_{DD(Flash_Bank2)}$(1)	Flash bank 2 static consumption in normal mode (PD2 = 1 versus PD2 = 0)	47	52	65	84	120	64	76	98	123	175	
$I_{DD(Flash_Bank_LPM)}$(2)	One Flash bank additional static consumption in normal mode versus low-power mode (LPM = 0 versus. LPM = 1)	25	26	27	27	28	34	38	43	45	48	

1. When the flash memory is in power-down in Sleep mode (SLEEP_PD = 1), Bank 1 and Bank 2 are in power-down.
2. If no bank is in power-down, the additional static consumption of the Flash memory in normal mode versus low-power mode is 2 × $I_{DD(Flash_Bank_LPM)}$.

Table 42. Typical current consumption in Run mode on LDO, with different codes running from flash memory, ICACHE ON (1-way), prefetch ON(1)

Symbol	Parameter	Conditions			Typ			Unit	Typ			Unit
		-	Voltage scaling	Code	1.8 V	3 V	3.3 V		1.8 V	3 V	3.3 V	
I_{DD} (Run)	Supply current in Run mode	$f_{HCLK} = f_{MSI}$ = 24 MHz, all peripherals disabled, all SRAMs enabled	Range 4	Reduced Code	2	2	2	mA	83	83	83	µA/MHz
				CoreMark	2.05	2.05	2.05		85	85	85	
				SecureMark	2.15	2.15	2.15		90	90	90	
				Dhrystone 2.1	2.1	2.1	2.1		88	88	88	
				Fibonacci	1.75	1.75	1.75		73	73	73	
				While(1)	1.5	1.5	1.5		63	63	63	

Table 42. Typical current consumption in Run mode on LDO, with different codes running from flash memory, ICACHE ON (1-way), prefetch ON[1] (continued)

Symbol	Parameter	Conditions			Typ			Unit	Typ			Unit
		-	Voltage scaling	Code	1.8 V	3 V	3.3 V		1.8 V	3 V	3.3 V	
I_{DD} (Run)	Supply current in Run mode	$f_{HCLK} = f_{PLL} = 160$ MHz, PLL on HSE 16 MHz in bypass mode, all peripherals disabled, Flash bank 2 in power down, all SRAMs enabled	Range 1	Reduced Code	14.5	14.5	14.5	mA	91	91	91	µA/MHz
				CoreMark	15	15	15		94	94	94	
				SecureMark	16	16	16		100	100	100	
				Dhrystone 2.1	15.5	15.5	15.5		97	97	97	
				Fibonacci	12.5	12.5	12.5		78	78	78	
				While(1)	10.5	10.5	10.5		66	66	66	
		$f_{HCLK} = f_{PLL} = 110$ MHz, PLL on HSE 16 MHz in bypass mode, all peripherals disabled, Flash bank 2 in power down, all SRAMs enabled	Range 2	Reduced Code	9.35	9.4	9.4		85	85	85	
				CoreMark	9.55	9.6	9.6		87	87	87	
				SecureMark	10.5	10.5	10.5		95	95	95	
				Dhrystone 2.1	10	10	10		91	91	91	
				Fibonacci	7.95	8	8		72	73	73	
				While(1)	6.9	6.95	6.95		63	63	63	
		$f_{HCLK} = f_{HSE} = 55$ MHz, all peripherals disabled, Flash bank 2 in power down, all SRAMs enabled	Range 3	Reduced Code	4.65	4.75	4.75		85	86	86	
				CoreMark	4.75	4.85	4.85		86	88	88	
				SecureMark	5.15	5.2	5.25		94	95	95	
				Dhrystone 2.1	5	5.05	5.05		91	92	92	
				Fibonacci	3.95	4	4		72	73	73	
				While(1)	3.4	3.45	3.45		62	63	63	

1. The current consumption from SRAM is similar.

Table 43. Typical current consumption in Run mode on SMPS, with different codes running from flash memory, ICACHE ON (1-way), prefetch ON(1)

Symbol	Parameter	Conditions			Typ			Unit	Typ			Unit
		-	Voltage scaling	Code	1.8 V	3 V	3.3 V		1.8 V	3 V	3.3 V	
I_{DD} (Run)	Supply current in Run mode	$f_{HCLK} = f_{MSI} = 24$ MHz, all peripherals disabled, Flash bank 1 in low power, Flash bank 2 in power down, SRAM1, SRAM3, SRAM4, SRAM5, SRAM6 in power-down	Range 4	Reduced Code	1.10	0.76	0.71	mA	46	31	29	µA/MHz
				CoreMark	1.15	0.80	0.74		48	33	31	
				SecureMark	1.25	0.89	0.82		52	37	34	
				Dhrystone 2.1	1.20	0.86	0.80		50	36	33	
				Fibonacci	1.00	0.69	0.64		42	29	26	
				While(1)	0.87	0.63	0.60		36	26	25	
		$f_{HCLK} = f_{PLL} = 160$ MHz, PLL on HSE 16 MHz in bypass mode, all peripherals disabled, Flash bank 2 in power down, all SRAMs enabled	Range 1	Reduced Code	11.0	7.40	6.90		69	46	43	
				CoreMark	11.5	7.60	7.05		72	48	44	
				SecureMark	12.5	8.25	7.65		78	52	48	
				Dhrystone 2.1	12.0	7.95	7.40		75	50	46	
				Fibonacci	9.40	6.35	5.90		59	40	37	
				While(1)	8.20	5.55	5.20		51	35	33	
		$f_{HCLK} = f_{PLL} = 110$ MHz, PLL on HSE 16 MHz in bypass mode, all peripherals disabled, Flash bank 2 in power down, all SRAMs enabled	Range 2	Reduced Code	6.65	4.55	4.25		60	41	39	
				CoreMark	6.75	4.65	4.35		61	42	40	
				SecureMark	7.35	5.00	4.70		67	45	43	
				Dhrystone 2.1	7.10	4.85	4.55		65	44	41	
				Fibonacci	5.70	3.90	3.70		52	35	34	
				While(1)	4.95	3.45	3.25		45	31	30	
		$f_{HCLK} = f_{HSE} = 55$ MHz, all peripherals disabled, Flash bank 2 in power down, all SRAMs enabled	Range 3	Reduced Code	3.10	2.25	2.15	mA	56	41	39	µA/MHz
				CoreMark	3.20	2.30	2.20		58	42	40	
				SecureMark	3.45	2.45	2.35		63	45	43	
				Dhrystone 2.1	3.35	2.40	2.25		61	44	41	
				Fibonacci	2.65	1.95	1.85		48	35	34	

1. The current consumption from SRAM is similar.

Table 44. Typical current consumption in Run mode on LDO, with different codes running from flash memory in low-power mode, ICACHE ON (1-way), prefetch ON

Symbol	Parameter	Conditions			Typ			Unit	Typ			Unit
		-	Voltage scaling	Code	1.8 V	3 V	3.3 V		1.8 V	3 V	3.3 V	
I_{DD} (Run)	Supply current in Run mode	$f_{HCLK} = f_{MSI} = 24$ MHz, all peripherals disabled, Flash bank 1 in low power, Flash bank 2 in power down, SRAM2 enabled, SRAM1/3/4/5/6 in power down	Range 4	Reduced Code	1.75	1.75	1.75	mA	72.9	72.9	72.9	µA/MHz
				CoreMark	1.75	1.75	1.75		72.9	72.9	72.9	
				SecureMark	1.9	1.9	1.9		79.2	79.2	79.2	
				Dhrystone 2.1	1.85	1.85	1.85		77.1	77.1	77.1	
				Fibonacci	1.5	1.5	1.5		62.5	62.5	62.5	
				While(1)	1.25	1.25	1.25		52	52	52	

Table 45. Typical current consumption in Run mode on SMPS, with different codes running from flash memory in low-power mode, ICACHE ON (1-way), prefetch ON

Symbol	Parameter	Conditions			Typ			Unit	Typ			Unit
		-	Voltage scaling	Code	1.8 V	3 V	3.3 V		1.8 V	3 V	3.3 V	
I_{DD} (Run)	Supply current in Run mode	$f_{HCLK} = f_{MSI} = 24$ MHz, all peripherals disabled, Flash bank 1 in low power, Flash bank 2 in power down, SRAM2 enabled, SRAM1/3/4/5/6 in power down	Range 4	Reduced Code	0.99	0.67	0.61	mA	41.3	27.7	25.2	µA/MHz
				CoreMark	1.0	0.67	0.62		41.7	27.9	25.6	
				SecureMark	1.05	0.71	0.66		43.8	29.4	27.3	
				Dhrystone 2.1	1.05	0.68	0.62		43.8	28.1	25.8	
				Fibonacci	0.84	0.61	0.58		35.0	25.4	24.0	
				While(1)	0.76	0.49	0.45		31.7	20.3	18.6	

Table 46. Current consumption in Sleep mode on LDO, flash memory in power down

Symbol	Parameter	Conditions			Typ					Max					Unit
		-	Voltage scaling	f_{HCLK} (MHz)	25°C	55°C	85°C	105°C	125°C	30°C	55°C	85°C	105°C	125°C	
I_{DD} (Sleep)	Supply current in Sleep mode	$f_{HCLK} = f_{MSI}$, all peripherals disabled	Range 4	24	0.86	1.70	4.15	7.75	14.0	2.1	4.3	12	23	42	mA
				16	0.73	1.55	4.00	7.60	14.0	1.9	4.1	12	23	42	
				12	0.66	1.50	3.95	7.55	14.0	1.9	4.1	12	23	42	
				4	0.50	1.30	3.80	7.40	14.0	1.7	3.9	12	23	42	
				2	0.47	1.30	3.75	7.35	14.0	1.6	3.9	12	22	42	
				1	0.45	1.25	3.75	7.35	14.0	1.6	3.8	12	22	42	
				0.4	0.44	1.25	3.75	7.30	14.0	1.6	3.8	12	22	42	
				0.1	0.43	1.25	3.70	7.30	14.0	1.6	3.8	12	22	42	
		f_{HCLK} = PLL on HSE 16 MHz in bypass mode, all peripherals disabled	Range 1	160	5.15	6.75	11.0	17.5	27.5	8.6	12	26	46	81	
				140	4.70	6.30	10.5	17.0	27.5	8.1	12	25	46	81	
				120	4.25	5.85	10.0	16.5	27.0	7.6	11	25	45	81	
			Range 2	110	3.50	4.80	8.40	13.5	22.5	5.9	9.8	23	42	76	
				72	2.70	4.0	7.60	12.5	21.5	5.1	9.0	22	41	75	
				64	2.55	3.80	7.40	12.5	21.5	4.9	8.7	22	41	75	
		$f_{HCLK} = f_{HSE}$ bypass mode, all peripherals disabled	Range 3	55	1.85	2.90	5.90	10.0	17.5	3.6	6.5	17	31	56	
				32	1.40	2.45	5.40	9.70	17.5	3.1	6.0	16	30	56	

Table 47. Current consumption in Sleep mode on SMPS, flash memory in power down

Symbol	Parameter	Conditions			Typ at V_{DD} = 1.8 V					Max at 1.71 V ≤ V_{DD} ≤ 3.6 V(1)(2)					Unit
		-	Voltage scaling	f_{HCLK} (MHz)	25°C	55°C	85°C	105°C	125°C	30°C	55°C	85°C	105°C	125°C	
I_{DD} (Sleep)	Supply current in Sleep mode	f_{HCLK} = f_{MSI}, all peripherals disabled	Range 4	24	0.48	0.96	2.45	4.6	8.25	1.20	2.5	7.3	14	26	mA
				16	0.40	0.87	2.35	4.5	8.15	1.10	2.4	7.2	14	26	
				12	0.37	0.83	2.30	4.4	8.10	1.10	2.3	7.1	14	26	
				4	0.27	0.71	2.25	4.3	8.0	0.92	2.2	7.1	14	26	
				2	0.25	0.69	2.20	4.30	8.0	0.90	2.2	7.0	14	26	
				1	0.24	0.67	2.20	4.30	8.0	0.89	2.1	7.0	14	26	
				0.4	0.24	0.66	2.20	4.30	8.0	0.88	2.1	7.0	14	26	
				0.1	0.23	0.66	2.20	4.30	8.0	0.88	2.1	7.0	14	26	
		f_{HCLK} = PLL on HSE 16 MHz in bypass mode, all peripherals disabled	Range 1	160	4.05	5.30	8.55	13.0	20.5	6.30	9.7	22	38	67	
				140	3.70	4.95	8.20	12.5	20.5	5.90	9.3	22	38	67	
				120	3.35	4.55	7.85	12.5	20.0	5.50	8.8	21	38	66	
			Range 2	110	2.60	3.45	5.90	9.4	15.5	4.20	6.5	16	28	49	
				72	2.0	2.90	5.35	8.80	14.5	3.50	5.9	15	27	48	
				64	1.90	2.80	5.25	8.65	14.5	3.40	5.8	15	27	48	
		f_{HCLK} = f_{HSE} bypass mode, all peripherals disabled	Range 3	55	1.35	1.95	3.80	6.5	11.0	2.40	4.1	11	20	35	
				32	1.05	1.65	3.55	6.2	11.0	2.10	3.8	11	20	35	

1. Evaluated by characterization. Not tested in production.
2. The maximum value is at V_{DD} = 1.71 V in Sleep mode on SMPS.

Table 48. Current consumption in Sleep mode on SMPS, flash memory in power down, V_{DD} = 3.0 V

Symbol	Parameter	Conditions			Typ at V_{DD} = 3.0 V					Max at V_{DD} = 3.0 V(1)					Unit
		-	Voltage scaling	f_{HCLK} (MHz)	25°C	55°C	85°C	105°C	125°C	30°C	55°C	85°C	105°C	125°C	
I_{DD} (Sleep)	Supply current in Sleep mode	$f_{HCLK} = f_{MSI}$, all peripherals disabled	Range 4	24	0.28	0.65	1.50	2.80	5.10	0.63	1.5	4.3	8.1	16	mA
				16	0.27	0.63	1.45	2.75	5.05	0.61	1.5	4.2	8.0	15	
				12	0.20	0.60	1.40	2.70	5.0	0.53	1.5	4.2	8.0	15	
				4	0.15	0.48	1.35	2.65	4.95	0.48	1.4	4.1	7.9	15	
				2	0.14	0.43	1.35	2.65	4.95	0.47	1.3	4.1	7.9	15	
				1	0.13	0.42	1.35	2.65	4.95	0.46	1.3	4.1	7.9	15	
				0.4	0.13	0.42	1.35	2.65	4.95	0.46	1.3	4.1	7.9	15	
				0.1	0.13	0.41	1.35	2.60	4.95	0.46	1.3	4.1	7.8	15	
		f_{HCLK} = PLL on HSE 16 MHz in bypass mode, all peripherals disabled	Range 1	160	2.85	3.65	5.85	8.80	14.0	4.0	6.1	14	23	41	
				140	2.65	3.45	5.60	8.55	13.5	3.80	5.9	13	23	40	
				120	2.40	3.20	5.35	8.30	13.5	3.50	5.6	13	23	40	
			Range 2	110	1.90	2.50	4.10	6.35	10.5	2.70	4.3	9.4	17	30	
				72	1.55	2.10	3.75	6.0	10.0	2.30	3.8	9.1	16	29	
				64	1.45	2.05	3.65	5.90	9.95	2.20	3.8	8.9	16	29	
		$f_{HCLK} = f_{HSE}$ bypass mode, all peripherals disabled	Range 3	55	1.05	1.50	2.70	4.50	7.65	1.60	2.8	6.6	12	22	
				32	0.84	1.25	2.50	4.30	7.40	1.40	2.5	6.3	12	22	

1. Evaluated by characterization. Not tested in production.

Table 49. SRAM1/SRAM3/SRAM5/SRAM6 current consumption in Run/Sleep mode with LDO and SMPS

Symbol	Parameter	Conditions			Typ					Max					Unit
		-	Voltage scaling	f_{HCLK} (MHz)	25°C	55°C	85°C	105°C	125°C	30°C	55°C	85°C	105°C	125°C	
I_{DD} (SRAM1)	LDO	SRAM1 supply current in Run/Sleep mode (SRAM1PD = 1 versus SRAM1PD = 0)	Range 4	24	0.06	0.19	0.58	1.15	2.15	0.22	0.56	1.80	3.50	6.50	mA
			Range 1	160	0.16	0.40	1.05	2.0	3.65	0.58	1.20	3.20	6.0	11.0	
			Range 2	110	0.12	0.31	0.86	1.65	3.05	0.42	0.93	2.60	5.0	9.20	
			Range 3	55	0.08	0.24	0.70	1.40	2.60	0.31	0.72	2.10	4.20	7.80	
I_{DD} (SRAM3)		SRAM3 supply current in Run/Sleep mode (SRAM3PD = 1 versus SRAM3PD = 0)	Range 4	24	0.06	0.20	0.62	1.25	2.35	0.24	0.60	1.90	3.80	7.10	
			Range 1	160	0.18	0.43	1.15	2.15	3.95	0.64	1.30	3.50	6.50	12.0	
			Range 2	110	0.13	0.33	0.93	1.80	3.30	0.46	0.99	2.80	5.40	9.90	
			Range 3	55	0.09	0.26	0.76	1.50	2.75	0.33	0.77	2.30	4.50	8.30	
I_{DD} (SRAM5)		SRAM5 supply current in Run/Sleep mode (SRAM5PD = 1 versus SRAM5PD = 0)	Range 4	24	0.06	0.20	0.61	1.20	2.30	0.24	0.60	1.90	3.60	6.90	
			Range 1	160	0.17	0.42	1.15	2.15	3.85	0.62	1.30	3.50	6.50	12.0	
			Range 2	110	0.13	0.33	0.91	1.75	3.25	0.46	0.98	2.80	5.30	9.80	
			Range 3	55	0.09	0.26	0.75	1.45	2.75	0.33	0.77	2.30	4.40	8.30	
I_{DD} (SRAM6)		SRAM6 supply current in Run/Sleep mode (SRAM6PD = 0)	Range 4	24	0.04	0.13	0.39	0.76	1.45	0.15	0.38	1.20	2.30	4.40	
			Range 1	160	0.11	0.27	0.71	1.35	2.40	0.40	0.80	2.20	4.10	7.20	
			Range 2	110	0.08	0.21	0.58	1.10	2.05	0.29	0.62	1.80	3.30	6.20	
			Range 3	55	0.06	0.16	0.47	0.92	1.70	0.21	0.48	1.50	2.80	5.10	

Table 49. SRAM1/SRAM3/SRAM5/SRAM6 current consumption in Run/Sleep mode with LDO and SMPS (continued)

Symbol	Parameter	Conditions			Typ					Max					Unit
		-	Voltage scaling	f_{HCLK} (MHz)	25°C	55°C	85°C	105°C	125°C	30°C	55°C	85°C	105°C	125°C	
I_{DD} (SRAM1)	SMPS(1)	SRAM1 supply current in Run/Sleep mode (SRAM1PD = 1 versus SRAM1PD = 0)	Range 4	24	0.03	0.11	0.47	0.63	1.30	0.13	0.35	1.50	2.0	4.2	mA
			Range 1	160	0.13	0.33	0.87	1.62	2.92	0.49	1.10	2.8	5.2	9.3	
			Range 2	110	0.09	0.23	0.63	1.22	2.25	0.33	0.72	2.0	3.9	7.2	
			Range 3	55	0.06	0.16	0.48	0.95	1.75	0.22	0.52	1.6	3.0	5.6	
I_{DD} (SRAM3)		SRAM3 supply current in Run/Sleep mode (SRAM3PD = 1 versus SRAM3PD = 0)	Range 4	24	0.04	0.12	0.48	0.68	1.39	0.14	0.38	1.50	2.20	4.40	
			Range 1	160	0.14	0.35	0.93	1.75	3.17	0.53	1.20	3.0	5.60	10.0	
			Range 2	110	0.09	0.24	0.68	1.31	2.42	0.35	0.77	2.20	4.20	7.70	
			Range 3	55	0.06	0.18	0.52	1.02	1.92	0.24	0.56	1.70	3.30	6.10	
I_{DD} (SRAM5)		SRAM5 supply current in Run/Sleep mode (SRAM5PD = 1 versus SRAM5PD = 0)	Range 4	24	0.04	0.12	0.48	0.68	1.38	0.14	0.37	1.50	2.20	4.40	
			Range 1	160	0.14	0.34	0.92	1.75	3.08	0.53	1.10	2.90	5.60	9.80	
			Range 2	110	0.09	0.24	0.68	1.29	2.42	0.34	0.77	2.20	4.10	7.70	
			Range 3	55	0.06	0.18	0.51	1.00	1.83	0.23	0.56	1.70	3.20	5.80	
I_{DD} (SRAM6)		SRAM6 supply current in Run/Sleep mode (SRAM6PD = 0)	Range 4	24	0.02	0.07	0.37	0.41	0.86	0.08	0.23	1.20	1.30	2.80	
			Range 1	160	0.09	0.22	0.57	1.08	2.00	0.33	0.69	1.80	3.50	6.40	
			Range 2	110	0.06	0.15	0.43	0.82	1.50	0.22	0.49	1.40	2.60	4.80	
			Range 3	55	0.04	0.11	0.33	0.63	1.18	0.14	0.35	1.10	2.0	3.80	

Table 49. SRAM1/SRAM3/SRAM5/SRAM6 current consumption in Run/Sleep mode with LDO and SMPS (continued)

Symbol	Parameter	Conditions			Typ					Max					Unit
		-	Voltage scaling	f_{HCLK} (MHz)	25°C	55°C	85°C	105°C	125°C	30°C	55°C	85°C	105°C	125°C	
I_{DD} (SRAM1)	SMPS (V_{DD} = 3.0 V)	SRAM1 supply current in Run/Sleep mode (SRAM1PD = 1 versus SRAM1PD = 0)	Range 4	24	0.02	0.07	0.28	0.38	0.78	0.07	0.20	0.84	1.20	2.40	mA
			Range 1	160	0.08	0.20	0.52	0.97	1.75	0.28	0.59	1.60	3.0	5.30	
			Range 2	110	0.05	0.14	0.38	0.73	1.35	0.19	0.41	1.20	2.20	4.10	
			Range 3	55	0.03	0.10	0.29	0.57	1.05	0.13	0.30	0.87	1.80	3.20	
I_{DD} (SRAM3)		SRAM3 supply current in Run/Sleep mode (SRAM3PD = 1 versus SRAM3PD = 0)	Range 4	24	0.02	0.07	0.29	0.41	0.84	0.08	0.22	0.86	1.30	2.60	
			Range 1	160	0.08	0.21	0.56	1.05	1.90	0.31	0.63	1.70	3.20	5.70	
			Range 2	110	0.05	0.15	0.41	0.79	1.45	0.20	0.44	1.30	2.40	4.40	
			Range 3	55	0.04	0.11	0.31	0.61	1.15	0.14	0.32	0.93	1.90	3.50	
I_{DD} (SRAM5)		SRAM5 supply current in Run/Sleep mode (SRAM5PD = 1 versus SRAM5PD = 0)	Range 4	24	0.02	0.07	0.29	0.41	0.83	0.08	0.21	0.86	1.30	2.50	
			Range 1	160	0.08	0.21	0.55	1.05	1.85	0.30	0.62	1.70	3.20	5.60	
			Range 2	110	0.05	0.15	0.41	0.78	1.45	0.20	0.44	1.30	2.40	4.40	
			Range 3	55	0.04	0.11	0.31	0.60	1.10	0.13	0.32	0.92	1.80	3.30	
I_{DD} (SRAM6)		SRAM6 supply current in Run/Sleep mode (SRAM6PD = 0)	Range 4	24	0.01	0.04	0.22	0.25	0.52	0.04	0.13	0.66	0.74	1.60	
			Range 1	160	0.05	0.13	0.34	0.65	1.20	0.19	0.39	1.10	2.0	3.60	
			Range 2	110	0.03	0.09	0.26	0.49	0.90	0.13	0.28	0.77	1.50	2.70	
			Range 3	55	0.02	0.07	0.20	0.38	0.71	0.08	0.20	0.59	1.20	2.20	

1. The typical value is measured at V_{DD} = 1.8 V. The maximum value is for 1.71 ≤ VDD ≤ 3.6 V and is at V_{DD} = 1.71 V in Run/Sleep mode on SMPS.

Table 50. Current consumption in Stop 0 mode on LDO

Symbol	Parameter	Conditions	Typ					Max(1)					Unit
		V_{DD} (V)	25°C	55°C	85°C	105°C	125°C	30°C	55°C	85°C	105°C	125°C	
I_{DD} (Stop 0)	Supply current in Stop 0 mode, regulator in range 4, RTC disabled, 8-Kbyte SRAM2 + ICACHE retained	1.8	170	460	1300	2500	4600	620	1400	3900	7500	14000	µA
		2.4	170	460	1300	2500	4550	620	1400	3900	7500	14000	
		3	170	460	1300	2500	4550	620	1400	3900	7500	14000	
		3.3	170	460	1300	2500	4550	620	1400	3900	7500	14000	
		3.6	170	465	1300	2500	4550	620	1400	3900	7500	14000	
	Supply current in Stop 0 mode, regulator in range 4, RTC disabled, all SRAMs retained	1.8	205	540	1500	2950	5450	740	1700	4500	8900	17000	
		2.4	205	535	1500	2950	5450	740	1700	4500	8900	17000	
		3	205	540	1500	2950	5450	740	1700	4500	8900	17000	
		3.3	205	540	1500	2950	5450	740	1700	4500	8900	17000	
		3.6	205	545	1500	2950	5450	740	1700	4500	8900	17000	

1. Evaluated by characterization. Not tested in production.

Table 51. Current consumption in Stop 0 mode on SMPS

Symbol	Parameter	Conditions	Typ					Max[1]					Unit
		V_{DD} (V)	25°C	55°C	85°C	105°C	125°C	30°C	55°C	85°C	105°C	125°C	
I_{DD} (Stop 0)	Supply current in Stop 0 mode, regulator in range 4, RTC disabled, 8-Kbyte SRAM2 + ICACHE retained	1.8	83.5	250	695	1400	2700	310	750	2100	4200	8100	µA
		2.4	59.5	180	535	1150	2050	220	540	1700	3500	6200	
		3	45.5	135	440	965	1650	170	410	1400	2900	5000	
		3.3	43	125	425	885	1550	160	380	1300	2700	4700	
		3.6	47	140	440	805	1450	170	420	1400	2500	4400	
	Supply current in Stop 0 mode, regulator in range 4, RTC disabled, all SRAMs retained	1.8	105	295	850	1750	3250	380	890	2600	5300	9800	
		2.4	75	210	655	1350	2400	270	630	2000	4100	7200	
		3	56.5	160	605	1100	2000	210	480	1900	3300	6000	
		3.3	54	145	575	1050	1850	200	440	1800	3200	5600	
		3.6	58	160	535	980	1700	210	480	1700	3000	5100	

1. Evaluated by characterization. Not tested in production.

Table 52. Current consumption in Stop 1 mode on LDO

Symbol	Parameter	Conditions	Typ					Max[1]					Unit
		V_{DD} (V)	25°C	55°C	85°C	105°C	125°C	30°C	55°C	85°C	105°C	125°C	
I_{DD} (Stop 1)	Supply current in Stop 1 mode, RTC disabled, 8-Kbyte SRAM2 + ICACHE retained	1.8	130	405	1200	2350	4300	470	1300	3600	7100	13000	µA
		2.4	140	405	1200	2350	4300	510	1300	3600	7100	13000	
		3	135	405	1200	2350	4300	490	1300	3600	7100	13000	
		3.3	135	410	1200	2350	4300	490	1300	3600	7100	13000	
		3.6	145	420	1200	2350	4300	530	1300	3600	7100	13000	
	Supply current in Stop 1 mode, RTC disabled, all SRAM retained	1.8	160	470	1400	2750	5150	580	1500	4200	8300	16000	
		2.4	175	470	1400	2750	5100	640	1500	4200	8300	16000	
		3	165	475	1400	2750	5150	600	1500	4200	8300	16000	
		3.3	165	480	1400	2750	5150	600	1500	4200	8300	16000	
		3.6	175	485	1400	2750	5150	640	1500	4200	8300	16000	
I_{DD} (Stop 1 with RTC)	Supply current in Stop 1 mode, RTC[2] clocked by LSI 32 kHz, 8-Kbyte SRAM2 + ICACHE retained	1.8	130	405	1200	2350	4300	470	1300	3600	7100	13000	
		2.4	145	405	1200	2350	4300	530	1300	3600	7100	13000	
		3	135	405	1200	2350	4300	490	1300	3600	7100	13000	
		3.3	135	410	1200	2350	4300	490	1300	3600	7100	13000	
		3.6	145	425	1200	2350	4350	530	1300	3600	7100	14000	
	Supply current in Stop 1 mode, RTC[2] clocked by LSE bypassed at 32768 Hz, 8-Kbyte SRAM2 + ICACHE retained	1.8	130	410	1200	2350	4300	470	1300	3600	7100	13000	
		2.4	145	405	1200	2350	4300	530	1300	3600	7100	13000	
		3	135	405	1200	2350	4300	490	1300	3600	7100	13000	
		3.3	135	405	1200	2350	4300	490	1300	3600	7100	13000	
		3.6	145	425	1200	2350	4350	530	1300	3600	7100	14000	

Table 52. Current consumption in Stop 1 mode on LDO (continued)

Symbol	Parameter	Conditions	Typ					Max(1)					Unit
		V_{DD} (V)	25°C	55°C	85°C	105°C	125°C	30°C	55°C	85°C	105°C	125°C	
I_{DD} (Stop 1 with RTC)	Supply current in Stop 1 mode, RTC(2) clocked by LSE quartz in low-drive mode, RCC_BDCR.LSESYSEN = 0, 8-Kbyte SRAM2 + ICACHE retained	1.8	130	405	1200	2300	4250	-	-	-	-	-	µA
		2.4	145	405	1200	2300	4250	-	-	-	-	-	
		3	135	405	1200	2300	4250	-	-	-	-	-	
		3.3	135	405	1200	2300	4300	-	-	-	-	-	
		3.6	150	415	1200	2300	4300	-	-	-	-	-	

1. Evaluated by characterization. Not tested in production.
2. RTC with default configuration but RTC_CALR.LPCAL = 1.

Table 53. Current consumption during wake-up from Stop 1 mode on LDO

Symbol	Parameter	Conditions		Typ	Unit
		-	V_{DD} (V)	25°C	
$Q_{DD(wakeup\ from\ Stop\ 1)}$	Electrical charge consumed during wake-up from Stop 1 mode	Wake-up clock is MSI 24 MHz	3.0	40	nAs
		Wake-up clock is HSI 16 MHz		40	
		Wake-up clock is MSI 1 MHz		70	

Table 54. Current consumption in Stop 1 mode on SMPS

Symbol	Parameter	Conditions	Typ					Max(1)					Unit
		V_{DD} (V)	25°C	55°C	85°C	105°C	125°C	30°C	55°C	85°C	105°C	125°C	
I_{DD} (Stop 1)	Supply current in Stop 1 mode, RTC disabled, 8-Kbyte SRAM2 + ICACHE retained	1.8	83	250	700	1400	2700	300	750	2100	4200	8100	µA
		2.4	60	180	535	1150	2050	220	540	1700	3500	6200	
		3	45	135	440	965	1650	170	410	1400	2900	5000	
		3.3	43	125	425	885	1550	160	380	1300	2700	4700	
		3.6	47	135	440	805	1450	170	410	1400	2500	4400	
	Supply current in Stop 1 mode, RTC disabled, all SRAM retained	1.8	105	295	850	1750	3250	380	890	2600	5300	9800	
		2.4	75	210	650	1350	2400	270	630	2000	4100	7200	
		3	56	160	610	1100	2000	210	480	1900	3300	6000	
		3.3	53	145	575	1050	1850	200	440	1800	3200	5600	
		3.6	58	160	535	980	1700	210	480	1700	3000	5100	
I_{DD} (Stop 1 with RTC)	Supply current in Stop 1 mode, RTC(2) clocked by LSI 32 kHz, 8-Kbyte SRAM2 + ICACHE retained	1.8	84	250	700	1400	2700	310	750	2100	4200	8100	
		2.4	60	180	535	1150	2050	220	540	1700	3500	6200	
		3	46	135	440	965	1650	170	410	1400	2900	5000	
		3.3	43	125	425	885	1550	160	380	1300	2700	4700	
		3.6	47	140	440	805	1450	170	420	1400	2500	4400	
	Supply current in Stop 1 mode, RTC(2) clocked by LSE bypassed at 32768 Hz, 8-Kbyte SRAM2 + ICACHE retained	1.8	84	250	700	1400	2700	310	750	2100	4200	8100	
		2.4	60	180	535	1150	2050	220	540	1700	3500	6200	
		3	46	135	440	965	1650	170	410	1400	2900	5000	
		3.3	43	125	425	885	1550	160	380	1300	2700	4700	
		3.6	47	140	440	805	1450	170	420	1400	2500	4400	

Table 54. Current consumption in Stop 1 mode on SMPS (continued)

Symbol	Parameter	Conditions	Typ					Max(1)					Unit
		V_{DD} (V)	25°C	55°C	85°C	105°C	125°C	30°C	55°C	85°C	105°C	125°C	
I_{DD} (Stop 1 with RTC)	Supply current in Stop 1 mode, RTC(2) clocked by LSE quartz in low-drive mode, RCC_BDCR.LSESYSEN = 0, 8-Kbyte SRAM2 + ICACHE retained	1.8	82	255	750	1600	3000	-	-	-	-	-	µA
		2.4	59	185	575	1250	2250	-	-	-	-	-	
		3	45	140	550	1050	1850	-	-	-	-	-	
		3.3	42	130	525	980	1700	-	-	-	-	-	
		3.6	46	145	485	915	1600	-	-	-	-	-	

1. Evaluated by characterization. Not tested in production.
2. RTC with default configuration but RTC_CALR.LPCAL = 1.

Table 55. Current consumption during wake-up from Stop 1 mode on SMPS

Symbol	Parameter	Conditions		Typ	Unit
		-	V_{DD} (V)	25°C	
$Q_{DD(wakeup\ from\ Stop\ 1)}$	Electrical charge consumed during wake-up from Stop 1 mode	Wake-up clock is MSI 24 MHz	3.0	40	nAs
		Wake-up clock is HSI 16 MHz		40	
		Wake-up clock is MSI 1 MHz		70	

Table 56. Current consumption in Stop 2 mode on LDO

Symbol	Parameter	Conditions	Typ					Max(1)					Unit
		V_{DD} (V)	25°C	55°C	85°C	105°C	125°C	30°C	55°C	85°C	105°C	125°C	
I_{DD} (Stop 2)	Supply current in Stop 2 mode, RTC disabled, 8-Kbyte SRAM2 + ICACHE retained	1.8	11.5	32.5	99	200	390	42	98	300	600	1200	µA
		2.4	12	33	99	200	385	44	99	300	600	1200	
		3	13	34.5	100	205	395	47	110	300	620	1200	
		3.3	13	34.5	100	205	395	47	110	300	620	1200	
		3.6	15	36	105	210	405	55	110	320	630	1300	
	Supply current in Stop 2 mode, RTC disabled, all SRAM retained	1.8	52	110	315	645	1300	190	330	950	2000	3900	
		2.4	42	110	315	650	1300	160	330	950	2000	3900	
		3	45.5	110	315	650	1300	170	330	950	2000	3900	
		3.3	44	110	315	655	1300	160	330	950	2000	3900	
		3.6	49	115	320	660	1300	180	350	960	2000	3900	
I_{DD} (Stop 2 with RTC)	Supply current in Stop 2 mode, RTC(2) clocked by LSI 32 kHz, 8-Kbyte SRAM2 + ICACHE retained	1.8	12	32.5	99	200	390	44	98	300	600	1200	
		2.4	12.5	33.5	99.5	200	385	46	110	300	600	1200	
		3	14	35	100	205	395	51	110	300	620	1200	
		3.3	14	35	100	205	395	51	110	300	620	1200	
		3.6	16	36.5	105	210	405	58	110	320	630	1300	
	Supply current in Stop 2 mode, RTC(2) clocked by LSI 250 Hz, 8-Kbyte SRAM2 + ICACHE retained	1.8	12	32.5	99	200	390	44	98	300	600	1200	
		2.4	12.5	33	99.5	200	385	46	99	300	600	1200	
		3	12.5	35	100	205	395	47	110	300	620	1200	
		3.3	13.5	34.5	100	205	395	49	110	300	620	1200	
		3.6	15.5	36.5	105	210	405	56	110	320	630	1300	

Table 56. Current consumption in Stop 2 mode on LDO (continued)

Symbol	Parameter	Conditions	Typ					Max(1)					Unit
		V_{DD} (V)	25°C	55°C	85°C	105°C	125°C	30°C	55°C	85°C	105°C	125°C	
I_{DD} (Stop 2 with RTC)	Supply current in Stop 2 mode, RTC(2) clocked by LSE bypassed at 32768 Hz, 8-Kbyte SRAM2 + ICACHE retained	1.8	12	32.5	99	200	390	44	98	300	600	1200	µA
		2.4	12.5	33	99.5	200	385	46	99	300	600	1200	
		3	13.5	35	100	205	395	49	110	300	620	1200	
		3.3	13.5	35	100	205	395	49	110	300	620	1200	
		3.6	16	36.5	105	210	405	58	110	320	630	1300	
	Supply current in Stop 2 mode, RTC(2) clocked by LSE quartz in low-drive mode, RCC_BDCR.LSESYSEN = 0, 8-Kbyte SRAM2 + ICACHE retained	1.8	12.5	33.5	97.5	195	385	-	-	-	-	-	
		2.4	13	33	98.5	200	385	-	-	-	-	-	
		3	13	36	99.5	200	390	-	-	-	-	-	
		3.3	14	36	100	205	395	-	-	-	-	-	
		3.6	16	36.5	105	210	400	-	-	-	-	-	

1. Evaluated by characterization. Not tested in production.
2. RTC with default configuration but RTC_CALR.LPCAL = 1.

Table 57. SRAM static power consumption in Stop 2 when supplied by LDO

Symbol	Parameter	Typ					Max(1)					Unit
		25°C	55°C	85°C	105°C	125°C	30°C	55°C	85°C	105°C	125°C	
$I_{DD(SRAM1_64kB)}$(2)	SRAM1 64 KB page x static consumption (SRAM1PDSx = 1 versus SRAM1PDSx = 0)	0.70	1.75	4.80	10.0	21.5	2.60	5.30	15	30	65	µA
$I_{DD(SRAM2_8kB)}$(3)	SRAM2 8KB page 1 static consumption (SRAM2PDS1 = 1 versus SRAM2PDS1 = 0)	0.10	0.46	1.15	2.75	5.10	0.35	1.40	3.5	8.3	16	
$I_{DD(SRAM2_56kB)}$(3)	SRAM2 56 KB page 2 static consumption (SRAM2PDS2 = 1 versus SRAM2PDS2 = 0)	0.85	2.40	7.00	14.50	30.0	3.10	7.20	21	44	90	

Table 57. SRAM static power consumption in Stop 2 when supplied by LDO (continued)

Symbol	Parameter	Typ					Max[1]					Unit
		25°C	55°C	85°C	105°C	125°C	30°C	55°C	85°C	105°C	125°C	
$I_{DD(SRAM3_64kB)}$[4]	SRAM3 64 KB page x static consumption (SRAM3PDSx = 1 versus SRAM3PDSx = 0)	0.73	1.80	4.90	10.0	21.0	2.70	5.40	15	30	63	µA
$I_{DD(SRAM4)}$	SRAM4 static consumption (SRAM4PDS = 1 versus SRAM4PDS = 0)	0.20	0.61	1.45	3.40	5.80	0.71	1.90	4.4	11	18	
$I_{DD(SRAM5_64kB)}$[5]	SRAM5 64 KB page x static consumption (SRAM5PDSx = 1 versus SRAM5PDSx = 0)	0.69	1.75	4.95	10.0	21.0	2.50	5.30	15	30	63	
$I_{DD(SRAM6_64kB)}$[6]	SRAM6 64 KB page x static consumption (SRAM6PDSx = 1 versus SRAM6PDSx = 0)	0.69	1.75	4.90	10.0	20.5	2.50	5.30	15	30	62	
$I_{DD(ICRAM)}$	ICACHE SRAM static consumption (ICRAMPDS = 1 versus ICRAMPDS = 0)	0.50	1.55	4.40	9.20	18.5	1.90	4.70	14	28	56	
$I_{DD(DC1RAM)}$	DCACHE1 SRAM static consumption (DC1RAMPDS = 1 versus DC1RAMPDS = 0)	0.23	0.76	2.00	4.45	8.30	0.83	2.30	6.0	14	25	
$I_{DD(DC2RAM)}$	DCACHE2 SRAM static consumption (DC2RAMPDS = 1 versus DC2RAMPDS = 0)	0.16	0.74	2.00	4.55	8.20	0.58	2.30	6.0	14	25	
$I_{DD(DMA2DRAM)}$	DMA2D SRAM static consumption (DMA2DRAMPDS = 1 versus DMA2DRAMPDS = 0)	0.07	0.15	0.21	0.66	1.10	0.26	0.44	0.6	2.0	3.3	
$I_{DD(PRAM)}$	FMAC, FDCAN, and USB peripherals SRAM static consumption (PRAMPDS = 1 versus PRAMPDS = 0)	0.05	0.22	0.59	1.45	2.10	0.19	0.65	1.8	4.4	6.3	
$I_{DD(GPRAM)}$	Graphic peripherals (LTDC, GFXMMU) SRAM static consumption (GPRAMPDS = 1 versus GPRAMPDS = 0)	0.06	0.31	0.64	1.50	2.20	0.24	0.92	2.0	4.5	6.6	
$I_{DD(PKARAM)}$	PKA SRAM static consumption (PKARAMPDS = 1 versus PKARAMPDS = 0)	0.03	0.22	0.60	1.50	2.25	0.11	0.65	1.8	4.5	6.8	

1. Evaluated by characterization. Not tested in production.
2. SRAM1 total consumption is 12 x $I_{DD(SRAM1_64KB)}$.
3. SRAM2 total consumption is $I_{DD(SRAM2_8KB)}$ + $I_{DD(SRAM2_56KB)}$.

4. SRAM3 total consumption is 13 x $I_{DD(SRAM3_64KB)}$.
5. SRAM5 total consumption is 13 x $I_{DD(SRAM5_64KB)}$.
6. SRAM6 total consumption is 8 x $I_{DD(SRAM6_64KB)}$.

Table 58. Current consumption during wake-up from Stop 2 mode on LDO

Symbol	Parameter	Conditions		Typ	Unit
		-	V_{DD} (V)	25°C	
$Q_{DD(wakeup\ from\ Stop\ 2)}$	Electrical charge consumed during wake-up from Stop 2 mode	Wake-up clock is MSI 24 MHz	3.0	30	nAs
		Wake-up clock is HSI 16 MHz		30	
		Wake-up clock is MSI 1 MHz		70	

Table 59. Current consumption in Stop 2 mode on SMPS

Symbol	Parameter	Conditions	Typ					Max[1]					Unit
		VDD	25°C	55°C	85°C	105°C	125°C	30°C	55°C	85°C	105°C	125°C	
I_{DD} (Stop 2)	Supply current in Stop 2 mode, RTC disabled, 8-Kbyte SRAM2 + ICACHE retained	1.8	7.2	19.5	60	120	240	26	59	180	360	720	µA
		2.4	5.15	14	43.5	89	175	19	42	130	270	520	
		3	4.05	11	34.5	71.5	145	15	33	110	210	430	
		3.3	4.1	11	33	67.5	135	15	33	97	200	400	
		3.6	5.4	13.5	38	74.5	140	19	39	120	220	410	
	Supply current in Stop 2 mode, RTC disabled, all SRAM retained	1.8	30	67	190	390	760	110	210	570	1200	2300	
		2.4	21	47	135	280	580	76	150	410	840	1800	
		3	15.5	36	105	260	530	56	110	320	780	1600	
		3.3	15	33.5	96.5	260	530	54	100	290	780	1600	
		3.6	17	38	105	235	500	61	120	320	700	1500	
I_{DD} (Stop 2 with RTC)	Supply current in Stop 2 mode, RTC[2] clocked by LSI 32 kHz, 8-Kbyte SRAM2 + ICACHE retained	1.8	7.5	20	60.5	120	240	27	60	190	360	720	
		2.4	5.55	14.5	43.5	89.5	175	20	44	130	270	520	
		3	4.55	11.5	35	72	145	17	34	110	220	430	
		3.3	4.65	11.5	33.5	68	135	17	34	98	200	400	
		3.6	6	14	38.5	75	140	21	41	120	220	410	
	Supply current in Stop 2 mode, RTC[2] clocked by LSI 250 Hz, 8-Kbyte SRAM2 + ICACHE retained	1.8	7.3	19.5	60	120	240	27	59	180	360	720	
		2.4	5.25	14	43.5	89	175	19	42	130	270	520	
		3	4.2	11.5	34.5	71.5	145	15	34	110	210	430	
		3.3	4.25	11	33	68	135	15	33	97	200	400	
		3.6	5.55	13.5	38	74.5	140	19	39	120	220	410	

Table 59. Current consumption in Stop 2 mode on SMPS (continued)

Symbol	Parameter	Conditions	Typ					Max(1)					Unit
		VDD	25°C	55°C	85°C	105°C	125°C	30°C	55°C	85°C	105°C	125°C	
I_{DD} (Stop 2 with RTC)	Supply current in Stop 2 mode, RTC(2) clocked by LSE bypassed at 32768 Hz, 8-Kbyte SRAM2 + ICACHE retained	1.8	7.45	20	60	120	240	27	60	180	360	720	µA
		2.4	5.4	14.5	43.5	89	175	20	44	130	270	520	
		3	4	11.5	35	72	145	16	34	110	220	430	
		3.3	4.5	11.5	33.5	68	135	16	34	98	200	400	
		3.6	5.85	14	38.5	75	140	21	41	120	220	410	
	Supply current in Stop 2 mode, RTC(2) clocked by LSE quartz in low-drive mode, 8-Kbyte SRAM2 + ICACHE retained	1.8	7.4	20	62	130	260	-	-	-	-	-	
		2.4	5.4	15	46	97	195	-	-	-	-	-	
		3	4.3	11.5	37	78.5	160	-	-	-	-	-	
		3.3	4.4	11.5	36	74.5	150	-	-	-	-	-	
		3.6	5.55	14	41	82	160	-	-	-	-	-	

1. Evaluated by characterization. Not tested in production.
2. RTC with default configuration but RTC_CALR.LPCAL = 1.

Table 60. SRAM static power consumption in Stop 2 when supplied by SMPS

Symbol	Parameter	Typ					Max(1)					Unit
		25°C	55°C	85°C	105°C	125°C	30°C	55°C	85°C	105°C	125°C	
$I_{DD(SRAM1_64kB)}$(2)	SRAM1 64 KB page x static consumption (SRAM1PDSx = 1 versus SRAM1PDSx = 0)	0.23	0.53	1.45	3.00	6.40	0.83	1.60	4.4	9.0	20	µA
$I_{DD(SRAM2_8kB)}$(3)	SRAM2 8KB page 1 static consumption (SRAM2PDS1 = 1 versus SRAM2PDS1 = 0)	0.05	0.12	0.37	0.74	1.75	0.18	0.36	1.1	2.3	5.3	
$I_{DD(SRAM2_56kB)}$(3)	SRAM2 56 KB page 2 static consumption (SRAM2PDS2 = 1 versus SRAM2PDS2 = 0)	0.30	0.69	2.05	4.25	8.90	1.10	2.10	6.2	13	27	
$I_{DD(SRAM3_64kB)}$(4)	SRAM3 64 KB page x static consumption (SRAM3PDSx = 1 versus SRAM3PDSx = 0)	0.24	0.51	1.45	2.95	6.30	0.87	1.60	4.4	8.9	19	

Table 60. SRAM static power consumption in Stop 2 when supplied by SMPS (continued)

Symbol	Parameter	Typ					Max[1]					Unit
		25°C	55°C	85°C	105°C	125°C	30°C	55°C	85°C	105°C	125°C	
$I_{DD(SRAM4)}$	SRAM4 static consumption (SRAM4PDS = 1 versus SRAM4PDS = 0)	0.08	0.16	0.45	0.85	2.05	0.28	0.48	1.4	2.6	6.2	µA
$I_{DD(SRAM5_64kB)}$[5]	SRAM5 64 KB page x static consumption (SRAM5PDSx = 1 versus SRAM5PDSx = 0)	0.23	0.50	1.40	2.95	6.00	0.83	1.50	4.2	8.9	18	
$I_{DD(SRAM6_64kB)}$[6]	SRAM6 64 KB page x static consumption (SRAM6PDSx = 1 versus SRAM6PDSx = 0)	0.29	0.50	1.40	2.95	6.30	1.10	1.50	4.2	8.9	19	
$I_{DD(ICRAM)}$	ICACHE SRAM static consumption (ICRAMPDS = 1 versus ICRAMPDS = 0)	0.19	0.43	1.30	2.60	5.60	0.67	1.30	3.9	7.8	17	
$I_{DD(DC1RAM)}$	DCACHE1 SRAM static consumption (DC1RAMPDS = 1 versus DC1RAMPDS = 0)	0.08	0.19	0.57	1.10	2.70	0.31	0.56	1.7	3.3	8.1	
$I_{DD(DC2RAM)}$	DCACHE2 SRAM static consumption (DC2RAMPDS = 1 versus DC2RAMPDS = 0)	0.08	0.19	0.57	1.15	2.40	0.29	0.57	1.7	3.5	7.2	
$I_{DD(DMA2DRAM)}$	DMA2D SRAM static consumption (DMA2DRAMPDS = 1 versus DMA2DRAMPDS = 0)	0.01	0.03	0.05	0.20	0.43	0.03	0.09	0.2	0.6	1.3	
$I_{DD(PRAM)}$	FMAC, FDCAN, and USB peripherals SRAM static consumption (PRAMPDS = 1 versus PRAMPDS = 0)	0.03	0.05	0.18	0.25	0.87	0.11	0.17	0.5	0.7	2.6	
$I_{DD(GPRAM)}$	Graphic peripherals (LTDC, GFXMMU) SRAM static consumption (GPRAMPDS = 1 versus GPRAMPDS = 0)	0.04	0.06	0.16	0.25	0.87	0.13	0.19	0.5	0.7	2.6	
$I_{DD(PKARAM)}$	PKA SRAM static consumption (PKARAMPDS = 1 versus PKARAMPDS = 0)	0.03	0.04	0.13	0.24	0.87	0.11	0.12	0.4	0.7	2.7	

1. Evaluated by characterization. Not tested in production.
2. SRAM1 total consumption is 12 x $I_{DD(SRAM1_64KB)}$.
3. SRAM2 total consumption is $I_{DD(SRAM2_8KB)}$ + $I_{DD(SRAM2_56KB)}$.
4. SRAM3 total consumption is 13 x $I_{DD(SRAM3_64KB)}$.
5. SRAM5 total consumption is 13 x $I_{DD(SRAM5_64KB)}$.

6. SRAM6 total consumption is 8 x $I_{DD(SRAM6_64KB)}$.

Table 61. Current consumption during wake-up from Stop 2 mode on SMPS

Symbol	Parameter	Conditions		Typ	Unit
		-	V_{DD} (V)	25°C	
$Q_{DD(wakeup\ from\ Stop\ 2)}$	Electrical charge consumed during wake-up from Stop 2 mode	Wake-up clock is MSI 24 MHz	3.0	30	nAs
		Wake-up clock is HSI 16 MHz		30	
		Wake-up clock is MSI 1 MHz		70	

Table 62. Current consumption in Stop 3 mode on LDO

Symbol	Parameter	Conditions	Typ					Max(1)					Unit
		V_{DD} (V)	25°C	55°C	85°C	105°C	125°C	30°C	55°C	85°C	105°C	125°C	
I_{DD} (Stop 3)	Supply current in Stop 3 mode, RTC disabled, 8-Kbyte SRAM2 + ICACHE retained	1.8	5.65	19.5	62.5	130	260	21	59	190	390	780	µA
		2.4	6.4	20.5	66	135	275	23	62	200	410	820	
		3	6.35	20.5	67	140	275	23	61	200	420	820	
		3.3	7.15	21.5	68.5	140	280	26	64	210	420	830	
		3.6	8.35	23	71	145	290	30	68	210	430	860	
	Supply current in Stop 3 mode, RTC disabled, all SRAM retained	1.8	29.5	84	280	615	1300	110	260	840	1900	3900	
		2.4	25	82.5	280	615	1300	90	250	840	1900	3900	
		3	28.5	83	280	620	1300	110	250	840	1900	3900	
		3.3	27	83.5	285	625	1300	97	250	860	1900	3900	
		3.6	28.5	87	290	630	1350	110	260	870	1900	4100	
I_{DD} (Stop 3 with RTC)	Supply current in Stop 3 mode, RTC(2) clocked by LSI 32 kHz, 8-Kbyte SRAM2 + ICACHE retained	1.8	6.35	20	64.5	135	270	23	60	200	410	810	
		2.4	6.8	20.5	66.5	135	275	25	62	200	410	820	
		3	6.9	21	67.5	140	280	25	63	210	420	830	
		3.3	7.7	22	69	140	280	28	66	210	420	830	
		3.6	9	24	72	145	290	32	71	220	430	860	
	Supply current in Stop 3 mode, RTC(2) clocked by LSI 250 Hz, 8-Kbyte SRAM2 + ICACHE retained	1.8	6.2	20	64.5	135	270	23	60	200	410	810	
		2.4	6.55	20.5	66	135	275	24	62	200	410	820	
		3	6.55	21	67	140	275	24	63	200	420	820	
		3.3	7.3	21.5	68.5	140	280	26	64	210	420	830	
		3.6	8.55	23.5	71.5	145	290	30	69	220	430	860	

Table 62. Current consumption in Stop 3 mode on LDO (continued)

Symbol	Parameter	Conditions	Typ					Max(1)					Unit
		V_{DD} (V)	25°C	55°C	85°C	105°C	125°C	30°C	55°C	85°C	105°C	125°C	
I_{DD} (Stop 3 with RTC)	Supply current in Stop 3 mode, RTC(2) clocked by LSE bypassed at 32768 Hz, 8-Kbyte SRAM2 + ICACHE retained	1.8	6.35	20	65	135	270	23	60	200	410	810	µA
		2.4	6.7	20.5	66	135	275	24	62	200	410	820	
		3	6.75	21	67.5	140	275	25	63	210	420	820	
		3.3	7.55	22	69	140	280	27	66	210	420	830	
		3.6	8.9	23.5	72	145	290	31	69	220	430	860	
	Supply current in Stop 3 mode, RTC(2) clocked by LSE quartz in low-drive mode, 8-Kbyte SRAM2 + ICACHE retained	1.8	6.2	20.5	67	140	285	-	-	-	-	-	
		2.4	6.7	21	68	145	285	-	-	-	-	-	
		3	7.25	21.5	69	145	290	-	-	-	-	-	
		3.3	7.45	22	70.5	150	295	-	-	-	-	-	
		3.6	8.7	24	74	150	305	-	-	-	-	-	

1. Evaluated by characterization. Not tested in production.
2. RTC with default configuration but RTC_CALR.LPCAL = 1.

Table 63. SRAM static power consumption in Stop 3 when supplied by LDO

Symbol	Parameter	Typ					Max[1]					Unit
		25°C	55°C	85°C	105°C	125°C	30°C	55°C	85°C	105°C	125°C	
$I_{DD(SRAM1_64kB)}$[2]	SRAM1 64 KB page x static consumption (SRAM1PDSx = 1 versus SRAM1PDSx = 0)	0.45	1.40	4.20	9.80	21.5	1.70	4.20	13	30	65	µA
$I_{DD(SRAM2_8kB)}$[3]	SRAM2 8KB page 1 static consumption (SRAM2PDS1 = 1 versus SRAM2PDS1 = 0)	0.08	0.30	0.82	1.65	4.00	0.30	0.90	2.5	5.0	12	
$I_{DD(SRAM2_56kB)}$[3]	SRAM2 56 KB page 2 static consumption (SRAM2PDS2 = 1 versus SRAM2PDS2 = 0)	0.56	1.85	5.85	13.0	28.0	2.00	5.60	18	39	84	
$I_{DD(SRAM3_64kB)}$[4]	SRAM3 64 KB page x static consumption (SRAM3PDSx = 1 versus SRAM3PDSx = 0)	0.45	1.40	4.35	9.95	21.5	1.70	4.20	14	30	65	
$I_{DD(SRAM4)}$	SRAM4 static consumption (SRAM4PDS = 1 versus SRAM4PDS = 0)	0.12	0.35	1.05	2.20	5.80	0.42	1.10	3.2	6.6	18	
$I_{DD(SRAM5_64kB)}$[5]	SRAM5 64 KB page x static consumption (SRAM5PDSx = 1 versus SRAM5PDSx = 0)	0.44	1.40	4.25	9.85	22.0	1.60	4.20	13	30	66	
$I_{DD(SRAM6_64kB)}$[6]	SRAM6 64 KB page x static consumption (SRAM6PDSx = 1 versus SRAM6PDSx = 0)	0.44	1.40	4.20	9.75	21.5	1.60	4.20	13	30	65	
$I_{DD(ICRAM)}$	ICACHE SRAM static consumption (ICRAMPDS = 1 versus ICRAMPDS = 0)	0.29	1.00	3.05	6.80	15.5	1.10	3.00	9.2	21	47	
$I_{DD(DC1RAM)}$	DCACHE1 SRAM static consumption (DC1RAMPDS = 1 versus DC1RAMPDS = 0)	0.14	0.46	1.45	2.95	7.35	0.51	1.40	4.4	8.9	23	
$I_{DD(DC2RAM)}$	DCACHE2 SRAM static consumption (DC2RAMPDS = 1 versus DC2RAMPDS = 0)	0.14	0.48	1.40	3.00	7.15	0.49	1.50	4.2	9.0	22	
$I_{DD(DMA2DRAM)}$	DMA2D SRAM static consumption (DMA2DRAMPDS = 1 versus DMA2DRAMPDS = 0)	0.01	0.05	0.09	0.40	0.75	0.04	0.17	0.3	1.2	2.3	

Table 63. SRAM static power consumption in Stop 3 when supplied by LDO (continued)

Symbol	Parameter	Typ					Max[1]					Unit
		25°C	55°C	85°C	105°C	125°C	30°C	55°C	85°C	105°C	125°C	
$I_{DD(PRAM)}$	FMAC, FDCAN, and USB peripherals SRAM static consumption (PRAMPDS = 1 versus PRAMPDS = 0)	0.03	0.15	0.31	0.60	2.00	0.12	0.44	0.9	1.8	6.0	µA
$I_{DD(GPRAM)}$	Graphic peripherals (LTDC, GFXMMU) SRAM static consumption (GPRAMPDS = 1 versus GPRAMPDS = 0)	0.03	0.15	0.35	0.58	2.15	0.12	0.44	1.1	1.8	6.5	
$I_{DD(PKARAM)}$	PKA SRAM static consumption (PKARAMPDS = 1 versus PKARAMPDS = 0)	0.03	0.2	0.4	0.7	2.3	0.11	0.51	1.4	2.3	6.8	

1. Evaluated by characterization. Not tested in production.
2. SRAM1 total consumption is 12 x $I_{DD(SRAM1_64KB)}$.
3. SRAM2 total consumption is $I_{DD(SRAM2_8KB)}$ + $I_{DD(SRAM2_56KB)}$.
4. SRAM3 total consumption is 13 x $I_{DD(SRAM3_64KB)}$.
5. SRAM5 total consumption is 13 x $I_{DD(SRAM5_64KB)}$.
6. SRAM6 total consumption is 8 x $I_{DD(SRAM6_64KB)}$.

Table 64. Current consumption during wake-up from Stop 3 mode on LDO

Symbol	Parameter	Conditions		Typ[1]	Unit
		-	V_{DD} (V)	25°C	
$Q_{DD(wakeup\ from\ Stop\ 3)}$	Electrical charge consumed during wake-up from Stop 3 mode	Wake-up clock is MSI 24 MHz	3.0	430	nAs
		Wake-up clock is HSI 16 MHz		410	
		Wake-up clock is MSI 1 MHz		610	

1. Evaluated by characterization in worse case condition (V_{CAP} = 0.7 V before wake-up).

Table 65. Current consumption in Stop 3 mode on SMPS

Symbol	Parameter	Conditions	Typ					Max[1]					Unit
		V_{DD} (V)	25°C	55°C	85°C	105°C	125°C	30°C	55°C	85°C	105°C	125°C	
I_{DD} (Stop 3)	Supply current in Stop 3 mode, RTC disabled, 8 KB SRAM2 + ICACHE retained	1.8	2.55	8.35	28	59.5	120	9.1	35	83	180	360	µA
		2.4	2.25	7.3	24.5	52.5	105	8	22	73	160	310	
		3	2.05	6.5	21.5	46	94.5	7.2	19	63	140	280	
		3.3	2.25	6.65	21.5	45	92.5	7.7	20	62	130	270	
		3.6	3.15	7.8	22.5	46	93	11	22	64	140	270	
	Supply current in Stop 3 mode, RTC disabled, all SRAM retained	1.8	11.5	33.5	115	285	625	41	110	350	860	1900	
		2.4	9.8	29	100	220	515	35	87	300	660	1600	
		3	8.25	24.5	84	185	390	30	73	250	560	1200	
		3.3	7.95	23	79	175	370	28	69	240	520	1100	
		3.6	8.55	23	76.5	165	355	30	68	230	490	1100	
I_{DD} (Stop 3 with RTC)	Supply current in Stop 3 mode, RTC[2] clocked by LSI 32 kHz, 8-Kbyte SRAM2 + ICACHE retained	1.8	2.8	8.65	28.5	60	120	10	35	85	180	360	
		2.4	2.6	7.7	25	52.5	105	9.3	23	74	160	310	
		3	2.5	7	22	46.5	95	8.8	21	64	140	280	
		3.3	2.8	7.2	22	45.5	93	9.7	21	64	140	270	
		3.6	3.8	8.45	23.5	46.5	94	13	24	67	140	270	
	Supply current in Stop 3 mode, RTC[2] clocked by LSI 250 Hz, 8-Kbyte SRAM2 + ICACHE retained	1.8	2.65	8.45	28	59.5	120	9.4	34	83	180	360	
		2.4	2.35	7.4	25	52.5	105	8.4	22	74	160	310	
		3	2.15	6.6	22	46	94.5	7.5	20	64	140	280	
		3.3	2.35	6.75	21.5	45	92.5	8.1	20	62	130	270	
		3.6	3.3	7.95	23	46.5	93.5	11	23	66	140	270	

Table 65. Current consumption in Stop 3 mode on SMPS (continued)

Symbol	Parameter	Conditions	Typ					Max(1)					Unit
		V_{DD} (V)	25°C	55°C	85°C	105°C	125°C	30°C	55°C	85°C	105°C	125°C	
I_{DD} (Stop 3 with RTC)	Supply current in Stop 3 mode, RTC(2) clocked by LSE bypassed at 32768 Hz, 8-Kbyte SRAM2 + ICACHE retained	1.8	2.75	8.6	28.5	59.5	120	9.8	35	85	180	360	µA
		2.4	2.5	7.55	25	52.5	105	8.9	23	74	160	310	
		3	2.35	6.85	22	46.5	95	8.3	20	64	140	280	
		3.3	2.6	7.05	22	45.5	93	9	21	64	140	270	
		3.6	3.6	8.3	23	46.5	93.5	12	24	66	140	270	
	Supply current in Stop 3 mode, RTC(2) clocked by LSE quartz in low-drive mode, 8-Kbyte SRAM2 + ICACHE retained	1.8	2.85	9.05	38	70	140	-	-	-	-	-	
		2.4	2.6	8.05	27.5	64	125	-	-	-	-	-	
		3	2.4	7.2	28	54	105	-	-	-	-	-	
		3.3	2.65	7.35	23.5	52	105	-	-	-	-	-	
		3.6	3.65	9.05	26	51	105	-	-	-	-	-	

1. Evaluated by characterization. Not tested in production.
2. RTC with default configuration but RTC_CALR.LPCA L= 1.

Table 66. SRAM static power consumption in Stop 3 when supplied by SMPS

Symbol	Parameter	Typ					Max(1)					Unit
		25°C	55°C	85°C	105°C	125°C	30°C	55°C	85°C	105°C	125°C	
$I_{DD(SRAM1_64kB)}$(2)	SRAM1 64 KB page x static consumption (SRAM1PDSx = 1 versus SRAM1PDSx = 0)	0.13	0.37	1.30	2.90	6.20	0.47	1.10	3.9	8.7	19.0	µA
$I_{DD(SRAM2_8kB)}$(3)	SRAM2 8KB page 1 static consumption (SRAM2PDS1 = 1 versus SRAM2PDS1 = 0)	0.03	0.07	0.25	0.57	1.15	0.09	0.22	0.8	1.7	3.5	
$I_{DD(SRAM2_56kB)}$(2)	SRAM2 56 KB page 2 static consumption (SRAM2PDS2 = 1 versus SRAM2PDS2 = 0)	0.17	0.50	1.75	3.80	8.00	0.60	1.50	5.3	12.0	24.0	
$I_{DD(SRAM3_64kB)}$(4)	SRAM3 64 KB page x static consumption (SRAM3PDSx = 1 versus SRAM3PDSx = 0)	0.13	0.37	1.30	2.95	6.30	0.47	1.20	3.9	8.9	19.0	

Table 66. SRAM static power consumption in Stop 3 when supplied by SMPS (continued)

Symbol	Parameter	Typ					Max[1]					Unit
		25°C	55°C	85°C	105°C	125°C	30°C	55°C	85°C	105°C	125°C	
$I_{DD(SRAM4)}$	SRAM4 static consumption (SRAM4PDS = 1 versus SRAM4PDS = 0)	0.04	0.09	0.31	0.73	1.75	0.14	0.28	0.9	2.2	5.3	µA
$I_{DD(SRAM5_64kB)}$[5]	SRAM5 64 KB page x static consumption (SRAM5PDSx = 1 versus SRAM5PDSx = 0)	0.13	0.37	1.30	2.95	6.20	0.46	1.20	3.9	8.9	19.0	
$I_{DD(SRAM6_64kB)}$[6]	SRAM6 64 KB page x static consumption (SRAM6PDSx = 1 versus SRAM6PDSx = 0)	0.13	0.36	1.30	2.90	6.25	0.46	1.10	3.9	8.7	19.0	
$I_{DD(ICRAM)}$	ICACHE SRAM static consumption (ICRAMPDS = 1 versus ICRAMPDS = 0)	0.09	0.27	0.92	2.05	4.50	0.34	0.81	2.8	6.2	14.0	
$I_{DD(DC1RAM)}$	DCACHE1 SRAM static consumption (DC1RAMPDS = 1 versus DC1RAMPDS = 0)	0.04	0.12	0.42	0.97	2.10	0.17	0.36	1.3	3.0	6.3	
$I_{DD(DC2RAM)}$	DCACHE2 SRAM static consumption (DC2RAMPDS = 1 versus DC2RAMPDS = 0)	0.04	0.13	0.42	0.99	2.05	0.15	0.38	1.3	3.0	6.2	
$I_{DD(DMA2DRAM)}$	DMA2D SRAM static consumption (DMA2DRAMPDS = 1 versus DMA2DRAMPDS = 0)	0.01	0.01	0.03	0.08	0.25	0.03	0.03	0.1	0.3	0.7	
$I_{DD(PRAM)}$	FMAC, FDCAN, and USB peripherals SRAM static consumption (PRAMPDS = 1 versus PRAMPDS = 0)	0.02	0.03	0.09	0.26	0.60	0.06	0.11	0.3	0.8	1.8	
$I_{DD(GPRAM)}$	Graphic peripherals (LTDC, GFXMMU) SRAM static consumption (GPRAMPDS = 1 versus GPRAMPDS = 0)	0.01	0.03	0.11	0.29	0.61	0.04	0.09	0.3	0.9	1.9	
$I_{DD(PKARAM)}$	PKA SRAM static consumption (PKARAMPDS = 1 versus PKARAMPDS = 0)	0.02	0.04	0.12	0.31	0.64	0.06	0.13	0.4	0.9	2.0	

1. Evaluated by characterization. Not tested in production.
2. SRAM1 total consumption is 12 x $I_{DD(SRAM1_64KB)}$.
3. SRAM2 total consumption is $I_{DD(SRAM2_8KB)}$ + $I_{DD(SRAM2_56KB)}$.
4. SRAM3 total consumption is 13 x $I_{DD(SRAM3_64KB)}$.
5. SRAM5 total consumption is 13 x $I_{DD(SRAM5_64KB)}$.

6. SRAM6 total consumption is 8 x $I_{DD(SRAM6_64KB)}$.

Table 67. Current consumption during wake-up from Stop 3 mode on SMPS

Symbol	Parameter	Conditions		Typ[1]	Unit
		-	V_{DD} (V)	25°C	
$Q_{DD(wakeup\ from\ Stop\ 3)}$	Electrical charge consumed during wake-up from Stop 3 mode	Wake-up clock is MSI 24 MHz	3.0	160	nAs
		Wake-up clock is HSI 16 MHz		150	
		Wake-up clock is MSI 1 MHz		250	

1. Evaluated by characterization in worse case condition (V_{DD11} = 0.7 V before wake-up).

Table 68. Current consumption in Standby mode

Symbol	Parameter	Conditions		Typ					Max(1)					Unit
		-	V_{DD} (V)	25°C	55°C	85°C	105°C	125°C	30°C	55°C	85°C	105°C	125°C	
I_{DD} (Standby)	Supply current in Standby mode (backup registers retained), RTC disabled	No IWDG ULPMEN = 1	1.8	0.195	0.765	3.45	8.9	23	0.52	1.9	8.3	22	54	µA
			2.4	0.22	0.815	3.65	9.4	24	0.61	2.0	8.8	23	56	
			3	0.38	1.2	4.85	12	29.5	1.10	3.0	12	29	69	
			3.3	0.735	1.85	6.2	14	33.5	2.20	4.6	16	34	80	
			3.6	1.65	3.4	8.85	18	40	5.10	8.5	22	44	96	
		No IWDG	1.8	0.255	0.84	3.5	8.9	22.5	0.59	2.0	8.4	22	53	
			2.4	0.285	0.89	3.7	9.35	23.5	0.68	2.1	8.9	23	56	
			3	0.445	1.3	4.85	12	29	1.20	3.2	12	29	70	
			3.3	0.795	1.95	6.2	14	33	2.30	4.7	16	34	79	
			3.6	1.7	3.5	8.85	18	39	5.10	8.6	22	44	94	
		With IWDG clocked by LSI 32 kHz	1.8	0.54	1.1	3.8	9.25	23	0.76	2.2	8.7	22	53	
			2.4	0.69	1.25	4.1	9.8	24	0.95	2.4	9.3	23	56	
			3	0.955	1.75	5.35	12.5	29	1.60	3.5	13	29	69	
			3.3	1.4	2.45	6.75	14.5	33.5	2.70	5.2	16	35	80	
			3.6	2.4	4.05	9.45	18.5	39.5	5.60	9.1	23	45	95	
		With IWDG clocked by LSI 250 Hz	1.8	0.355	0.94	3.65	9	23	0.70	2.2	8.5	22	53	
			2.4	0.39	1	3.85	9.45	23.5	0.80	2.3	9.0	23	56	
			3	0.565	1.4	5	12	29	1.30	3.3	12	29	69	
			3.3	0.92	2.05	6.35	14	33	2.40	4.9	16	34	80	
			3.6	1.85	3.6	9	18	39	5.20	8.8	22	44	95	

Table 68. Current consumption in Standby mode (continued)

Symbol	Parameter	Conditions		Typ					Max(1)					Unit
		-	V_{DD} (V)	25°C	55°C	85°C	105°C	125°C	30°C	55°C	85°C	105°C	125°C	
I_{DD} (Standby with RTC)	Supply current in Standby mode (backup registers retained), RTC enabled	RTC(2) clocked by LSI 32 kHz, no IWDG(3)	1.8	0.54	1.1	3.8	9.25	23	0.76	2.2	8.7	22	53	µA
			2.4	0.65	1.25	4.1	9.7	24	0.95	2.4	9.2	23	56	
			3	0.9	1.75	5.3	12	29	1.60	3.5	12	29	69	
			3.3	1.3	2.45	6.75	14.5	33.5	2.70	5.2	16	35	80	
			3.6	2.3	4.05	9.45	18.5	39.5	5.60	9.1	23	45	95	
		RTC(2) clocked by LSI 250 Hz, no IWDG(3)	1.8	0.355	0.94	3.65	9.05	23	0.70	2.2	8.5	22	53	
			2.4	0.395	1	3.85	9.45	23.5	0.80	2.3	9.0	23	56	
			3	0.565	1.4	5	12	29	1.30	3.3	12	29	69	
			3.3	0.93	2.05	6.35	14	33	2.40	4.9	16	34	80	
			3.6	1.85	3.65	9.05	18	39	5.30	8.8	22	44	95	
		RTC(2) clocked by LSE bypassed at 32768 Hz	1.8	0.48	1.05	3.75	9.1	22.5	0.87	2.3	8.8	22	54	
			2.4	0.555	1.15	4	9.6	23.5	1.10	2.6	9.3	23	56	
			3	0.785	1.6	5.2	12	29	1.70	3.7	12	29	69	
			3.3	1.2	2.3	6.55	14.5	33	2.80	5.3	16	35	80	
			3.6	2.2	3.9	9.25	18.5	39	5.70	9.2	23	45	95	
		RTC(2) clocked by LSE quartz in low-drive mode	1.8	0.65	1.2	3.9	9.25	22.5	-	-	-	-	-	
			2.4	0.69	1.3	4.1	9.7	23.5	-	-	-	-	-	
			3	0.885	1.7	5.3	12	28.5	-	-	-	-	-	
			3.3	1.25	2.35	6.65	14.5	32.5	-	-	-	-	-	
			3.6	2.25	3.9	9.3	18.5	38.5	-	-	-	-	-	

Table 68. Current consumption in Standby mode (continued)

Symbol	Parameter	Conditions		Typ					Max(1)					Unit
		-	V_{DD} (V)	25°C	55°C	85°C	105°C	125°C	30°C	55°C	85°C	105°C	125°C	
I_{DD} (BKPSRAM)	Supply current to add in Standby mode when the backup SRAM is retained	-	1.8	0.14	0.26	0.5	0.95	2	0.5	0.8	1.5	2.9	6.0	µA
			2.4	0.135	0.26	0.5	0.65	2	0.5	0.8	1.5	2.0	6.0	
			3	0.13	0.25	0.5	0.5	1.5	0.5	0.8	1.5	1.5	4.5	
			3.3	0.135	0.2	0.5	1	2	0.5	0.6	1.5	3.0	6.0	
			3.6	0.15	0.25	0.5	1	2	0.6	0.8	1.5	3.0	6.0	

Table 68. Current consumption in Standby mode (continued)

Symbol	Parameter	Conditions		Typ					Max(1)					Unit
		-	V_{DD} (V)	25°C	55°C	85°C	105°C	125°C	30°C	55°C	85°C	105°C	125°C	
I_{DD} (SRAM2)	Supply current to add in Standby mode when the full SRAM2 and BKPSRAM are retained	LDO	1.8	1.695	5.36	15.5	32.1	65.5	6.2	17	47	97	200	µA
			2.4	1.715	5.41	15.3	32.15	65	6.2	17	46	97	200	
			3	1.755	5.45	15.65	32	65.5	6.4	17	47	96	200	
			3.3	1.755	6.25	15.3	32.5	66	6.4	19	46	98	200	
			3.6	1.85	5.95	15.65	32.5	66	6.7	18	47	98	200	
I_{DD} (SRAM2_8K)	Supply current to add in Standby mode when the SRAM2 8-Kbyte page 1 is retained		1.8	0.645	2.71	7.5	15.6	31.5	2.4	8.2	23	47	95	
			2.4	0.665	2.66	7.3	15.65	31.5	2.4	8.0	22	47	95	
			3	0.705	2.65	7.65	15.5	31.5	2.6	8.0	23	47	95	
			3.3	0.705	2.3	7.8	15.5	32	2.6	6.9	24	47	96	
			3.6	0.75	3	7.65	15.5	31.5	2.8	9.0	23	47	95	
I_{DD} (SRAM2)	Supply current to add in Standby mode when the full SRAM2 is retained	SMPS	1.8	0.945	2.66	8	16.6	34	3.5	8.0	24	50	110	
			2.4	0.715	2.16	6.3	13.65	27.5	2.6	6.5	19	41	83	
			3	0.705	1.85	5.65	11.5	24	2.6	5.6	17	35	72	
			3.3	0.655	1.6	4.8	10.5	22	2.4	4.8	15	32	66	
			3.6	0.55	1.35	4.15	9.5	20	2.0	4.1	13	29	60	
I_{DD} (SRAM2_8K)	Supply current to add in Standby mode when the SRAM2 8-Kbyte page 1 is retained		1.8	0.39	1.31	3.8	8.1	16.5	1.5	4.0	12	25	50	
			2.4	0.315	1.06	3.1	6.65	13	1.2	3.2	9.3	20	39	
			3	0.205	0.9	2.65	5	11	0.7	2.7	8.0	15	33	
			3.3	0.255	0.75	2.35	5	10	0.9	2.3	7.1	15	30	
			3.6	0.25	0.55	1.65	4	9	0.9	1.7	5.0	12	27	

1. Evaluated by characterization. Not tested in production.
2. RTC with default configuration but RTC_CALR.LPCAL = 1.
3. Current consumption with IWDG enabled is similar.

Table 69. Current consumption during wake-up from Standby mode

Symbol	Parameter	Conditions		Typ(1)	Unit
		-	V_{DD} (V)	25°C	
$Q_{DD(wakeup\ from\ Standby)}$	Electrical charge consumed during wake-up from Standby mode	Wake-up clock is MSI 4 MHz	3.0	3.2	µAs
		Wake-up clock is MSI 1 MHz			

1. Evaluated by characterization in worse case condition (V_{DD11} / V_{CAP} = 0 V before wake-up).

Table 70. Current consumption in Shutdown mode

Symbol	Parameter	Conditions		Typ					Max(1)					Unit
		-	V_{DD} (V)	25°C	55°C	85°C	105°C	125°C	30°C	55°C	85°C	105°C	125°C	
I_{DD} (Shutdown)	Supply current in Shutdown mode (backup registers retained), RTC disabled	-	1.8	0.15	0.73	3.20	8.10	20.0	0.47	1.9	8.0	21	50	µA
			2.4	0.18	0.78	3.40	8.55	21.0	0.56	2.0	8.5	22	53	
			3	0.34	1.20	4.55	11.00	26.0	1.10	3.0	12.0	28	65	
			3.3	0.68	1.80	5.90	13.00	30.5	2.20	4.5	15.0	33	77	
			3.6	1.60	3.35	8.55	17.00	36.5	5.00	8.4	22.0	43	92	
I_{DD} (Shutdown with RTC)	Supply current in Shutdown mode (backup registers retained), RTC enabled	RTC(2) clocked by LSE bypassed at 32768 Hz	1.8	0.37	0.95	3.45	8.30	20.0	0.86	2.1	8.3	21	50	
			2.4	0.45	1.05	3.65	8.80	21.0	1.10	2.3	8.8	22	53	
			3	0.67	1.50	4.85	11.00	26.0	1.60	3.4	12.0	28	65	
			3.3	1.10	2.15	6.20	13.50	30.0	2.70	4.9	16.0	34	76	
			3.6	2.05	3.75	8.90	17.50	36.5	5.00	8.9	22.0	44	92	
		RTC(2) clocked by LSE quartz in low-drive mode	1.8	0.55	1.10	3.60	8.45	20.0	-	-	-	-	-	
			2.4	0.59	1.15	3.80	8.90	21.0	-	-	-	-	-	
			3	0.78	1.60	4.95	11.50	26.0	-	-	-	-	-	
			3.3	1.15	2.20	6.30	13.50	30.0	-	-	-	-	-	
			3.6	2.15	3.80	8.95	17.50	36.0	-	-	-	-	-	

1. Evaluated by characterization. Not tested in production.
2. RTC with default configuration but RTC_CALR.LPCAL = 1.

Table 71. Current consumption during wake-up from Shutdown mode

Symbol	Parameter	Conditions		Typ(1)	Unit
		-	V_{DD} (V)	25°C	
$Q_{DD(wakeup\ from\ Shutdown)}$	Electrical charge consumed during wake-up from Shutdown mode	Wake-up clock is MSI 4 MHz	3.0	3.4	µAs

1. Evaluated by characterization in worse case condition (V_{DD11} / V_{CAP} = 0 V before wake-up).

Table 72. Current consumption in V_{BAT} mode

Symbol	Parameter	Conditions		Typ					Max(1)					Unit
		-	V_{DD} (V)	25°C	55°C	85°C	105°C	125°C	30°C	55°C	85°C	105°C	125°C	
$I_{DD(VBAT)}$	Supply current in V_{BAT} mode (backup registers retained), RTC disabled	-	1.8	0.08	0.23	0.93	2.30	5.65	0.24	0.68	2.6	5.8	15	µA
			2.4	0.08	0.24	0.97	2.35	5.80	0.24	0.70	2.6	5.9	15	
			3	0.12	0.33	1.25	2.90	6.90	0.36	0.83	3.2	7.3	18	
			3.3	0.20	0.51	1.80	4.25	10	0.61	1.30	4.5	11	25	
			3.6	0.40	0.82	2.35	4.95	11	1.30	2.10	5.9	13	28	
I_{DD} (VBAT with RTC)	Supply current in V_{BAT} mode (backup registers retained), RTC enabled	RTC(2) clocked by LSE bypassed at 32768 Hz	1.8	0.39	0.55	1.25	2.65	5.95	0.58	1.10	2.9	6.2	15	
			2.4	0.47	0.63	1.40	2.80	6.20	0.67	1.30	3.1	6.4	15	
			3	0.62	0.82	1.75	3.45	7.40	0.91	1.40	3.7	7.9	18	
			3.3	0.78	1.05	2.35	4.80	10.50	1.30	1.90	5.2	12	26	
			3.6	1.05	1.40	2.95	5.60	11.50	2.00	2.70	6.6	14	29	
		RTC(2) clocked by LSE bypassed at 32768 Hz, RTC_CALR.LPCAL = 1	1.8	0.30	0.46	1.20	2.55	5.85	0.49	1.10	2.8	6.1	15	
			2.4	0.34	0.51	1.25	2.70	6.10	0.53	1.10	3.0	6.3	15	
			3	0.46	0.65	1.60	3.30	7.20	0.74	1.30	3.6	7.7	18	
			3.3	0.60	0.87	2.20	4.65	10.5	1.10	1.70	5.0	12	26	
			3.6	0.87	1.20	2.75	5.40	11.5	1.80	2.50	6.4	13	29	

Table 72. Current consumption in V_{BAT} mode (continued)

Symbol	Parameter	Conditions		Typ					Max(1)					Unit
		-	V_{DD} (V)	25°C	55°C	85°C	105°C	125°C	30°C	55°C	85°C	105°C	125°C	
I_{DD} (VBAT with RTC)	Supply current in V_{BAT} mode (backup registers retained), RTC enabled	RTC(2) clocked by LSE quartz in low-drive mode	1.8	0.53	0.69	1.40	2.75	6.00	-	-	-	-	-	µA
			2.4	0.58	0.74	1.50	2.90	6.20	-	-	-	-	-	
			3	0.68	0.89	1.85	3.50	7.35	-	-	-	-	-	
			3.3	0.79	1.10	2.45	4.85	10.5	-	-	-	-	-	
			3.6	1.05	1.45	3.00	5.60	11.5	-	-	-	-	-	
		RTC(2) clocked by LSE quartz in low-drive mode, RTC_CALR.LPCAL =1	1.8	0.44	0.61	1.35	2.70	5.95	-	-	-	-	-	
			2.4	0.46	0.63	1.40	2.80	6.10	-	-	-	-	-	
			3	0.52	0.74	1.65	3.35	7.20	-	-	-	-	-	
			3.3	0.62	0.93	2.25	4.70	10.5	-	-	-	-	-	
			3.6	0.86	1.25	2.80	5.45	11.5	-	-	-	-	-	
I_{DD} (BKPSRAM)	Supply current to add in V_{BAT} mode when the backup SRAM is retained	-	1.8	0.14	0.22	0.48	0.90	1.90	0.29	0.49	1.3	2.6	5.6	
			2.4	0.14	0.22	0.48	0.95	1.90	0.30	0.49	1.3	2.7	5.6	
			3	0.14	0.21	0.45	0.95	1.85	0.31	0.48	1.2	2.7	5.4	
			3.3	0.14	0.21	0.50	0.95	2.00	0.31	0.48	1.4	2.7	5.9	
			3.6	0.15	0.24	0.45	0.95	2.00	0.33	0.56	1.2	2.7	5.9	

1. Evaluated by characterization. Not tested in production.
2. RTC with default configuration except otherwise specified.

I/O system current consumption

The current consumption of the I/O system has two components: static and dynamic.

I/O static current consumption

All the I/Os used as inputs with pull-up or pull-down generate current consumption when the pin is externally held to the opposite level. The value of this current consumption can be simply computed by using the pull-up/pull-down resistors values given in *Section 5.3.15: I/O port characteristics*.

For the output pins, any internal or external pull-up or pull-down or external load must also be considered to estimate the current consumption.

Additional I/O current consumption is due to I/Os configured as inputs if an intermediate voltage level is externally applied. This current consumption is caused by the input Schmitt trigger circuits used to discriminate the input value. Unless this specific configuration is required by the application, this supply current consumption can be avoided by configuring these I/Os in analog mode. This is notably the case of the ADC input pins, that must be configured as analog inputs.

Caution: Any floating input pin can also settle to an intermediate voltage level or switch inadvertently, as a result of external electromagnetic noise. To avoid current consumption related to floating pins, they must either be configured in analog mode, or forced internally to a definite digital value. This can be done either by using pull-up/down resistors or by configuring the pins in output mode.

I/O dynamic current consumption

In addition to the on-chip peripheral current consumption (see *Table 73*), the I/Os used by an application also contribute to the current consumption. When an I/O pin switches, it uses the current from the I/O supply voltage to supply the I/O pin circuitry and to charge/discharge the capacitive load (internal and external) connected to the pin:

$$I_{SW} = V_{DDIOx} \times f_{SW} \times C$$

where:

- I_{SW} is the current sunk by a switching I/O to charge/discharge the capacitive load.
- V_{DDIOx} is the I/O supply voltage.
- f_{SW} is the I/O switching frequency.
- C is the total capacitance seen by the I/O pin: $C = C_{INT} + C_{EXT} + C_S$.
- C_S is the PCB board capacitance including the pad pin.

The test pin is configured in push-pull output mode and is toggled by software at a fixed frequency.

On-chip peripheral current consumption

The current consumption of the on-chip peripherals is given in the table below. The MCU is placed under the following conditions:

- All I/O pins are in analog mode.
- The given value is calculated by measuring the difference of the current consumptions:
  - when the peripheral is clocked on
  - when the peripheral is clocked off

- The ambient operating temperature and supply voltage conditions are summarized in *Table 33: General operating conditions*.
- The power consumption of the digital part of the on-chip peripherals is given in the table below. The power consumption of the analog part of the peripherals (where applicable) is indicated in each related section of the datasheet.

Table 73. Typical dynamic current consumption of peripherals

Bus	Peripheral	LDO					SMPS					Unit
		Range 1	Range 2	Range 3	Range 4	Stop 1/2	Range 1	Range 2	Range 3	Range 4	Stop 1/2	
AHB1	AHB1	2.04	1.83	1.66	1.49	-	0.98	0.81	0.68	0.58	-	µA/MHz
	BKPSRAM	1.07	0.98	0.88	0.83	-	0.53	0.43	0.37	0.26	-	
	CORDIC	0.36	0.32	0.29	0.25	-	0.17	0.14	0.12	0.09	-	
	CRC	0.38	0.36	0.33	0.29	-	0.20	0.15	0.14	0.11	-	
	DCACHE1	0.94	0.87	0.78	0.76	-	0.47	0.38	0.33	0.26	-	
	DCACHE2	0.40	0.36	0.33	0.30	-	0.19	0.16	0.14	0.11	-	
	DMA2D	1.85	1.68	1.51	1.42	-	0.91	0.75	0.64	0.46	-	
	FLASH	2.17	1.98	1.78	1.64	-	1.06	0.88	0.74	0.56	-	
	FMAC	2.26	2.06	1.85	1.72	-	1.10	0.91	0.77	0.58	-	
	GFXMMU	3.16	2.89	2.59	2.43	-	1.54	1.27	1.08	0.83	-	
	GPDMA1	4.27	3.87	3.51	3.18	-	2.06	1.74	1.44	1.04	-	
	GPU	7.90	7.20	6.48	5.87	-	3.86	3.17	2.68	2.06	-	
	GTZC1	0.20	0.19	0.18	0.16	-	0.10	0.09	0.07	0.06	-	
	ICACHE	0.78	0.72	0.64	0.58	-	0.38	0.32	0.27	0.19	-	
	JPGDEC	2.46	2.24	2.03	1.87	-	1.20	0.99	0.84	0.64	-	
	MDF1	6.78	6.19	5.59	5.08	-	3.30	2.73	2.31	1.77	-	
	MDF1 indep(1)	0.57	0.53	0.50	0.42	-	0.28	0.24	0.19	0.16	-	
	RAMCFG	1.78	1.62	1.46	1.38	-	0.87	0.72	0.61	0.45	-	
	SRAM1	1.35	1.24	1.12	1.07	-	0.67	0.55	0.46	0.35	-	
	TSC	1.00	0.92	0.83	0.80	-	0.49	0.40	0.34	0.26	-	
AHB2-1	AHB2_1	1.83	1.66	1.50	1.36	-	0.89	0.74	0.62	0.53	-	
	ADC12	4.06	3.68	3.33	3.00	-	2.03	1.70	1.43	1.02	-	
	ADC12 indep(1)	0.70	0.64	0.59	0.52	-	0.34	0.29	0.25	0.27	-	
	AES	2.48	2.23	2.03	1.82	-	1.24	1.03	0.86	0.62	-	
	DCMI	4.38	3.97	3.60	3.25	-	2.19	1.84	1.54	1.16	-	
	GPIOA	0.06	0.04	0.04	0.03	-	0.02	0.02	0.02	0.01	-	
	GPIOB	0.06	0.03	0.03	0.02	-	0.02	0.02	0.02	0.01	-	

Table 73. Typical dynamic current consumption of peripherals (continued)

Bus	Peripheral	LDO					SMPS					Unit
		Range 1	Range 2	Range 3	Range 4	Stop 1/2	Range 1	Range 2	Range 3	Range 4	Stop 1/2	
AHB2-1	GPIOC	0.07	0.04	0.03	0.03	-	0.03	0.02	0.02	0.01	-	µA/MHz
	GPIOD	0.05	0.04	0.03	0.01	-	0.02	0.02	0.02	0.01	-	
	GPIOE	0.06	0.04	0.03	0.01	-	0.03	0.02	0.02	0.01	-	
	GPIOF	0.07	0.05	0.05	0.04	-	0.03	0.02	0.02	0.01	-	
	GPIOG	0.05	0.03	0.03	0.03	-	0.02	0.02	0.01	0.01	-	
	GPIOH	0.05	0.03	0.03	0.03	-	0.02	0.02	0.01	0.01	-	
	GPIOI	0.05	0.02	0.01	0.01	-	0.02	0.01	0.01	0.01	-	
	GPIOJ	0.07	0.05	0.05	0.03	-	0.03	0.02	0.02	0.01	-	
	HASH1	1.51	1.35	1.21	1.07	-	0.74	0.62	0.52	0.40	-	
	OCTOSPIM	0.12	0.10	0.10	0.06	-	0.05	0.04	0.03	0.02	-	
	OTFDEC1	1.75	1.57	1.42	1.29	-	0.86	0.73	0.60	0.33	-	
	OTFDEC2	2.22	2.00	1.81	1.63	-	1.10	0.93	0.77	0.45	-	
	OTG_HS	26.13	23.83	21.62	19.43	-	12.68	10.57	8.87	7.96	-	
	PKA	5.79	5.25	4.76	4.30	-	2.90	2.44	2.04	1.75	-	
	RNG	0.83	0.76	0.69	0.62	-	0.41	0.36	0.29	0.18	-	
	RNG indep(1)	0.07	0.07	0.07	0.06	-	0.05	0.05	0.04	0.03	-	
	SAES	2.90	2.62	2.38	2.13	-	1.45	1.22	1.02	0.64	-	
	SDMMC1	11.61	10.60	9.60	8.62	-	5.81	4.87	4.07	3.45	-	
	SDMMC1 indep(1)	1.43	1.31	1.17	1.10	-	0.72	0.59	0.51	0.43	-	
	SDMMC2	11.59	10.59	9.59	8.61	-	5.81	4.86	4.07	3.45	-	
	SDMMC2 indep(1)	1.29	1.17	1.07	1.01	-	0.64	0.55	0.46	0.39	-	
	SRAM2	1.31	1.18	1.08	0.95	-	0.66	0.55	0.46	0.28	-	
	SRAM3	2.39	2.15	1.94	1.74	-	1.19	1.00	0.83	0.49	-	
AHB2-2	AHB2_2	0.48	0.44	0.39	0.35	-	0.24	0.19	0.16	0.14	-	
	FMC	5.96	5.41	4.92	4.45	-	2.99	2.52	2.10	1.83	-	
	HSPI1	3.27	2.95	2.67	2.41	-	1.62	1.37	1.14	0.94	-	
	HSPI1 indep(1)	2.57	2.35	2.11	1.97	-	1.29	1.08	0.89	0.41	-	
	OCTOSPI1	1.39	1.24	1.13	1.04	-	0.69	0.58	0.48	0.35	-	
	OCTOSPI1 indep(1)	0.84	0.77	0.71	0.61	-	0.42	0.36	0.30	0.13	-	
	OCTOSPI2	1.29	1.16	1.06	0.97	-	0.64	0.53	0.45	0.33	-	

Table 73. Typical dynamic current consumption of peripherals (continued)

Bus	Peripheral	LDO					SMPS					Unit
		Range 1	Range 2	Range 3	Range 4	Stop 1/2	Range 1	Range 2	Range 3	Range 4	Stop 1/2	
AHB2-2	OCTOSPI2 indep(1)	1.16	1.06	0.95	0.84	-	0.58	0.49	0.41	0.18	-	µA/MHz
	SRAM5	1.99	1.80	1.64	1.45	-	0.99	0.83	0.69	0.39	-	
	SRAM6	2.25	2.03	1.85	1.66	-	1.12	0.94	0.78	0.45	-	
AHB3	AHB3	0.15	0.15	0.12	0.10	-	0.08	0.06	0.05	0.04	-	
	ADC4	1.24	1.11	1.03	0.94	1.04	0.60	0.50	0.43	0.35	0.31	
	ADC4 indep(1)	1.75	1.57	1.45	1.33	1.30	0.85	0.72	0.60	0.50	0.39	
	ADF1	1.11	1.02	0.92	0.84	0.94	0.56	0.47	0.38	0.25	0.28	
	ADF1 indep(1)	0.36	0.32	0.31	0.27	0.25	0.18	0.15	0.12	0.10	0.08	
	DAC1	1.97	1.77	1.62	1.44	1.56	0.99	0.82	0.68	0.48	0.47	
	DAC1 indep(1)	0.79	0.74	0.66	0.63	0.60	0.40	0.34	0.28	0.14	0.18	
	GTZC2	2.22	2.02	1.82	1.70	-	1.07	0.90	0.75	0.63	-	
	LPDMA1	0.41	0.34	0.33	0.32	0.41	0.20	0.17	0.13	0.10	0.12	
	LPGPIO1	0.04	0.03	0.03	0.02	0.14	0.02	0.02	0.01	0.01	0.04	
	PWR	0.22	0.20	0.18	0.15	-	0.11	0.09	0.08	0.06	-	
	SRAM4	0.67	0.60	0.56	0.52	-	0.34	0.28	0.23	0.20	-	
APB1	APB1	1.16	1.06	0.94	0.84	-	0.55	0.47	0.39	0.33	-	
	CRS	0.35	0.30	0.27	0.25	-	0.16	0.13	0.11	0.10	-	
	FDCAN1	4.44	4.04	3.64	3.22	-	2.14	1.78	1.51	1.08	-	
	FDCAN1 indep(1)	2.40	2.14	1.93	1.69	-	1.19	0.97	0.86	0.95	-	
	I2C1	0.75	0.67	0.58	0.52	-	0.35	0.29	0.24	0.20	-	
	I2C1 indep(1)	2.02	1.83	1.65	1.49	-	1.01	0.85	0.70	0.40	-	
	I2C2	2.65	2.40	2.15	1.90	-	1.28	1.06	0.89	0.61	-	
	I2C2 indep(1)	1.93	1.74	1.59	1.45	-	0.97	0.80	0.67	0.37	-	
	I2C4	0.75	0.66	0.57	0.50	-	0.35	0.29	0.25	0.20	-	
	I2C4 indep(1)	2.04	1.86	1.67	1.51	-	1.02	0.86	0.72	0.40	-	
	I2C5	2.88	2.60	2.34	2.08	-	1.39	1.16	0.98	0.66	-	
	I2C5 indep(1)	2.11	1.92	1.72	1.61	-	1.05	0.89	0.74	0.42	-	
	I2C6	2.82	2.56	2.31	2.02	-	1.36	1.13	0.96	0.65	-	
	I2C6 indep(1)	2.06	1.87	1.69	1.51	-	1.03	0.86	0.72	0.40	-	

Table 73. Typical dynamic current consumption of peripherals (continued)

Bus	Peripheral	LDO					SMPS					Unit
		Range 1	Range 2	Range 3	Range 4	Stop 1/2	Range 1	Range 2	Range 3	Range 4	Stop 1/2	
APB1	LPTIM2	1.31	1.19	1.07	0.94	-	0.63	0.53	0.45	0.35	-	µA/MHz
	LPTIM2 indep(1)	3.82	3.45	3.15	2.86	-	1.90	1.61	1.34	1.05	-	
	LTDC	11.33	10.32	9.31	8.36	-	5.53	4.55	3.86	2.94	-	
	SPI2	1.53	1.39	1.23	1.10	-	0.73	0.61	0.51	0.33	-	
	SPI2 indep(1)	0.67	0.62	0.55	0.48	-	0.33	0.28	0.24	0.12	-	
	TIM2	4.27	3.89	3.50	3.14	-	2.07	1.73	1.46	1.05	-	
	TIM3	4.20	3.84	3.45	3.10	-	2.03	1.70	1.43	1.03	-	
	TIM4	4.44	4.05	3.66	3.27	-	2.15	1.79	1.51	1.09	-	
	TIM5	4.18	3.83	3.45	3.08	-	2.02	1.69	1.42	1.04	-	
	TIM6	0.78	0.73	0.64	0.55	-	0.38	0.32	0.27	0.20	-	
	TIM7	0.79	0.75	0.65	0.56	-	0.38	0.33	0.27	0.20	-	
	UART4	1.79	1.61	1.45	1.27	-	0.86	0.72	0.60	0.39	-	
	UART4 indep(1)	3.30	3.02	2.74	2.43	-	1.66	1.40	1.16	0.97	-	
	UART5	1.85	1.66	1.50	1.31	-	0.88	0.74	0.63	0.41	-	
	UART5 indep(1)	3.35	3.05	2.76	2.49	-	1.68	1.42	1.18	0.99	-	
	UCPD1	1.65	1.49	1.34	1.17	-	0.79	0.66	0.56	0.36	-	
	USART2	5.85	5.34	4.81	4.29	-	2.83	2.36	2.00	1.47	-	
	USART2 indep(1)	4.04	3.67	3.34	2.99	-	2.02	1.70	1.42	1.26	-	
	USART3	1.81	1.65	1.47	1.31	-	0.87	0.72	0.61	0.50	-	
	USART3 indep(1)	4.02	3.67	3.32	3.01	-	2.02	1.69	1.41	1.26	-	
	USART6	5.85	5.33	4.83	4.32	-	2.83	2.35	2.01	1.47	-	
	USART6 indep(1)	4.04	3.69	3.33	3.03	-	2.02	1.71	1.42	1.26	-	
	WWDG	0.25	0.23	0.19	0.16	-	0.12	0.10	0.08	0.06	-	
APB2	APB2	1.18	1.05	0.95	0.84	-	0.57	0.48	0.41	0.34	-	
	DSI	13.07	11.89	10.73	9.68	-	6.36	5.25	4.41	3.59	-	
	GFXTIM	4.41	4.01	3.60	3.27	-	2.13	1.76	1.50	1.13	-	
	SAI1	1.54	1.39	1.24	1.14	-	0.74	0.61	0.51	0.39	-	
	SAI1 indep(1)	1.09	1.01	0.92	0.81	-	0.55	0.47	0.39	0.32	-	
	SAI2	1.49	1.36	1.22	1.09	-	0.72	0.59	0.50	0.38	-	

Table 73. Typical dynamic current consumption of peripherals (continued)

Bus	Peripheral	LDO					SMPS					Unit
		Range 1	Range 2	Range 3	Range 4	Stop 1/2	Range 1	Range 2	Range 3	Range 4	Stop 1/2	
APB2	SAI2 indep(1)	1.30	1.18	1.07	0.91	-	0.64	0.54	0.44	0.36	-	µA/MHz
	SPI1	1.35	1.23	1.11	1.01	-	0.65	0.54	0.46	0.34	-	
	SPI1 indep(1)	0.76	0.68	0.62	0.56	-	0.38	0.31	0.26	0.16	-	
	TIM1	6.48	5.90	5.34	4.83	-	3.14	2.63	2.20	1.93	-	
	TIM15	3.15	2.86	2.58	2.30	-	1.52	1.25	1.07	0.80	-	
	TIM16	2.30	2.09	1.88	1.68	-	1.11	0.92	0.78	0.60	-	
	TIM17	2.28	2.07	1.85	1.65	-	1.10	0.91	0.78	0.59	-	
	TIM8	6.53	5.98	5.41	4.83	-	3.20	2.63	2.24	1.71	-	
	USART1	1.84	1.67	1.54	1.36	-	0.89	0.73	0.64	0.47	-	
	USART1 indep(1)	3.48	3.17	2.92	2.61	-	1.74	1.47	1.24	1.09	-	
APB3	APB3	0.33	0.29	0.23	0.21	-	0.16	0.13	0.11	0.09	-	
	COMP	0.21	0.18	0.16	0.14	0.15	0.09	0.08	0.07	0.05	0.06	
	I2C3	0.58	0.53	0.48	0.40	0.43	0.29	0.24	0.21	0.16	0.29	
	I2C3 indep(1)	1.66	1.49	1.37	1.26	1.24	0.83	0.69	0.57	0.46	0.84	
	LPTIM1	0.99	0.92	0.81	0.76	0.75	0.48	0.41	0.35	0.24	0.22	
	LPTIM1 indep(1)	2.84	2.56	2.42	2.19	2.16	1.45	1.20	0.98	0.83	0.66	
	LPTIM3	0.94	0.86	0.80	0.71	0.71	0.45	0.39	0.32	0.23	0.21	
	LPTIM3 indep(1)	2.72	2.59	2.24	2.05	2.06	1.33	1.08	0.97	0.80	0.62	
	LPTIM4	0.54	0.51	0.47	0.43	0.41	0.27	0.23	0.20	0.18	0.16	
	LPTIM4 indep(1)	1.64	1.51	1.36	1.22	1.24	0.87	0.68	0.59	0.48	0.48	
	LPUART1	1.16	1.05	0.96	0.88	0.86	0.58	0.48	0.41	0.37	0.34	
	LPUART1 indep(1)	2.07	1.89	1.72	1.55	1.55	1.03	0.87	0.72	0.49	0.47	
	OPAMP	0.18	0.16	0.15	0.14	0.13	0.09	0.07	0.06	0.04	0.05	
	RTC	1.88	1.71	1.55	1.42	1.39	0.94	0.78	0.66	0.49	0.54	
	SPI3	0.93	0.87	0.77	0.71	0.70	0.47	0.40	0.33	0.30	0.21	
	SPI3 indep(1)	0.45	0.42	0.37	0.37	0.34	0.23	0.20	0.16	0.12	0.10	
	SYSCFG	0.39	0.35	0.28	0.26	-	0.18	0.15	0.13	0.09	-	
	VREFBUF	0.10	0.07	0.06	0.05	0.06	0.05	0.04	0.03	0.02	0.02	

1. indep = independent clock domain.

5.3.7 Wake-up time from low-power modes and voltage scaling transition times

The wake-up times given in the table below are the latency between the event and the execution of the first user instruction (FSTEN = 1 in PWR_CR3 if not mentioned).

The device goes in low-power mode after the WFE (wait for event) instruction.

Table 74. Low-power mode wake-up timings on LDO(1)

Mode	Parameter	Conditions		Typ (3V, 25°C)	Max (3V)	Unit
$t_{wu(Sleep)}$	Wake-up time from Sleep to Run mode	SLEEP_PD = 0		**14.1**	**17**	Nb of CPU cycles
		SLEEP_PD = 1 with MSI = 24 MHz		8.2	9	µs
$t_{wu(Stop\ 0)}$	Wake-up time from Stop 0 to Run mode All SRAMs retained	Wake-up in FLASH, range 4, FLASHFWU = 1 and SRAM4FWU = 1 in PWR_CR2 ICACHE OFF	MSI 24 MHz	2.6	3	
		Wake-up in FLASH, range 4, FLASHFWU = 0 and SRAM4FWU = 0 in PWR_CR2 ICACHE OFF	MSI 24 MHz	11.1	12	
			HSI 16 MHz	10.9	12	
			MSI 1 MHz	38.1	40	
		Wake-up in SRAM2, range 4, FLASHFWU = 0 and SRAM4FWU = 0 in PWR_CR2	MSI 24 MHz	5.0	6	
			HSI 16 MHz	6.9	8	
			MSI 1 MHz	34.1	36	
$t_{wu(Stop\ 1)}$	Wake-up time from Stop 1 to Run mode All SRAMs retained	Wake-up in FLASH, FLASHFWU = 1 and SRAM4FWU = 1 in PWR_CR2 ICACHE OFF	MSI 24 MHz	13.4	17	
		Wake-up in FLASH, FLASHFWU = 0 and SRAM4FWU = 0 in PWR_CR2 ICACHE OFF	MSI 24 MHz	21.9	25	
			HSI 16 MHz	21.6	25	
			MSI 1 MHz	48.9	52	
		Wake-up in SRAM2, range 4, FLASHFWU = 0 and SRAM4FWU = 0 in PWR_CR2	MSI 24 MHz	15.8	19	
			HSI 16 MHz	17.7	21	
			MSI 1 MHz	44.9	48	
$t_{wu(Stop\ 2)}$	Wake-up time from Stop 2 to Run mode All SRAMs retained	Wake-up in FLASH, SRAM4FWU = 1 in PWR_CR2 ICACHE OFF	MSI 24 MHz	20.5	24	
		Wake-up in FLASH, SRAM4FWU = 0 in PWR_CR2 ICACHE OFF	MSI 24 MHz	23.1	26	
			HSI 16 MHz	23.0	26	
			MSI 1 MHz	58.0	62	
		Wake-up in SRAM2, range 4, SRAM4FWU = 0 in PWR_CR2	MSI 24 MHz	17.0	20	
			HSI 16 MHz	19.2	22	
			MSI 1 MHz	54.0	58	
$t_{wu(Stop\ 3)}$	Wake-up time from Stop 3 to Run mode All SRAMs retained	Wake-up in FLASH, FSTEN = 0 in PWR_CR3 ICACHE OFF	MSI 24 MHz	56.2	136	

Table 74. Low-power mode wake-up timings on LDO(1) (continued)

Mode	Parameter	Conditions		Typ (3V, 25°C)	Max (3V)	Unit
$t_{wu(Stop\ 3)}$	Wake-up time from Stop 3 to Run mode All SRAMs retained	Wake-up in FLASH, FSTEN = 1 in PWR_CR3 ICACHE OFF	MSI 24 MHz	26.4	38	µs
			HSI 16 MHz	26.4	37	
			MSI 1 MHz	63.0	97	
		Wake-up in SRAM2, range 4	MSI 24 MHz	23.2	32	
			HSI 16 MHz	22.6	33	
			MSI 1 MHz	58.3	90	
$t_{wu(Standby\ with\ SRAM2)}$	Wake-up time from Standby with SRAM2 to Run mode	Wake-up in FLASH, FSTEN = 0 in PWR_CR3	MSI 4 MHz	65.1	70	
		Wake-up in FLASH, FSTEN = 1 in PWR_CR3	MSI 4 MHz	65.1	70	
			MSI 1 MHz	184.3	197	
$t_{wu(Standby)}$	Wake-up time from Standby to Run mode	Wake-up in FLASH, FSTEN = 0 in PWR_CR3	MSI 4 MHz	322.1	394	
		Wake-up in FLASH, FSTEN = 1 in PWR_CR3	MSI 4 MHz	93.6	126	
			MSI 1 MHz	206	284	
$t_{wu(Shutdown)}$	Wake-up time from Shutdown to Run mode	-	MSI 4 MHz	677.3	779	

1. Evaluated by characterization and not tested in production, unless otherwise specified.

Table 75. Low-power mode wake-up timings on SMPS(1)

Mode	Parameter	Conditions		Typ (3 V, 25 °C)	Max (3 V)	Unit
$t_{wu(Sleep)}$	Wake-up time from Sleep to Run mode	SLEEP_PD = 0		14	17	Nb of CPU cycles
		SLEEP_PD = 1 with MSI = 24 MHz		8.1	9	µs
$t_{wu(Stop\ 0)}$	Wake-up time from Stop 0 to Run mode All SRAMs retained	Wake-up in FLASH, range 4, FLASHFWU = 1 and SRAM4FWU = 1 in PWR_CR2 ICACHE OFF	MSI 24 MHz	2.6	3	
		Wake-up in FLASH, range 4, FLASHFWU = 0 and SRAM4FWU = 0 in PWR_CR2 ICACHE OFF	MSI 24 MHz	11.1	12	
			HSI 16 MHz	10.9	12	
			MSI 1 MHz	38.1	40	
		Wake-up in SRAM2, range 4, FLASHFWU = 0 and SRAM4FWU = 0 in PWR_CR2	MSI 24 MHz	5.0	6	
			HSI 16 MHz	6.9	8	
			MSI 1 MHz	34.1	36	

Table 75. Low-power mode wake-up timings on SMPS(1) (continued)

Mode	Parameter	Conditions		Typ (3 V, 25 °C)	Max (3 V)	Unit
$t_{wu(Stop\ 1)}$	Wake-up time from Stop 1 to Run mode All SRAMs retained	Wake-up in FLASH, FLASHFWU = 1 and SRAM4FWU = 1 in PWR_CR2 ICACHE OFF	MSI 24 MHz	7.8	9	µs
		Wake-up in FLASH FLASHFWU = 0 and SRAM4FWU = 0 in PWR_CR2 ICACHE OFF	MSI 24 MHz	16.3	18	
			HSI 16 MHz	16.1	18	
			MSI 1 MHz	43.3	46	
		Wake-up in SRAM2, range 4, FLASHFWU = 0 and SRAM4FWU = 0 in PWR_CR2	MSI 24 MHz	10.2	12	
			HSI 16 MHz	12.1	14	
			MSI 1 MHz	39.3	42	
$t_{wu(Stop\ 2)}$	Wake-up time from Stop 2 to Run mode All SRAMs retained	Wake-up in FLASH SRAM4FWU = 1 in PWR_CR2 ICACHE OFF	MSI 24 MHz	17.9	20	
		Wake-up in FLASH SRAM4FWU = 0 in PWR_CR2 ICACHE OFF	MSI 24 MHz	20.5	22	
			HSI 16 MHz	20.4	22	
			MSI 1 MHz	55.0	58	
		Wake-up in SRAM2, range 4, SRAM4FWU = 0 in PWR_CR2	MSI 24 MHz	14.4	16	
			HSI 16 MHz	16.6	18	
			MSI 1 MHz	51.0	54	
$t_{wu(Stop\ 3)}$	Wake-up time from Stop 3 to Run mode All SRAMs retained	Wake-up in FLASH, FSTEN = 0 in PWR_CR3 ICACHE OFF	MSI 24 MHz	131.4	163	
		Wake-up in FLASH, FSTEN = 1 in PWR_CR3 ICACHE OFF	MSI 24 MHz	31.5	40	
			HSI 16 MHz	31.5	39	
			MSI 1 MHz	72.2	82	
		Wake-up in SRAM2, range 4	MSI 24 MHz	25.4	34	
			HSI 16 MHz	27.4	35	
			MSI 1 MHz	67.3	76	
$t_{wu(Standby\ with\ SRAM2)}$	Wake-up time from Standby with SRAM2 to Run mode	Wake-up in FLASH, FSTEN = 0 in PWR_CR3	MSI 4 MHz	61.4	71	
		Wake-up in FLASH, FSTEN = 1 in PWR_CR3	MSI 4 MHz	61.4	70	
			MSI 1 MHz	175.9	204	
$t_{wu(Standby)}$	Wake-up time from Standby to Run mode	Wake-up in FLASH, FSTEN = 0 in PWR_CR3	MSI 4 MHz	325.5	393	
		Wake-up in FLASH, FSTEN = 1 in PWR_CR3	MSI 4 MHz	97.2	124	
			MSI 1 MHz	206	280	
$t_{wu(Shutdown)}$	Wake-up time from Shutdown to Run mode	-	MSI 4 MHz	677.2	779	

1. Evaluated by characterization and not tested in production, unless otherwise specified.

Table 76. Regulator mode transition times(1)

Symbol	Parameter	Conditions	Typ (3 V, 25 °C)	Max (3 V)	Unit
t_{LDO}(2)	SMPS to LDO transition time	Range 4	15.5	20	µs
		Range 3	14.5	18	
		Range 2	14.0	17	
		Range 1	13.9	17	
t_{SMPS}(2)	LDO to SMPS transition time	Range 4	13.2	17	
		Range 3	16.6	20	
		Range 2	16.1	19	
		Range 1	16.0	19	
t_{VOST}(3)	Range 4 to range 3	LDO	18.2	22	
		SMPS	24.4	29	
	Range 3 to range 2	LDO	12.2	15	
		SMPS	12.2	15	
	Range 2 to range 1	LDO	11.9	14	
		SMPS	11.9	14	
	Range 4 to range 1	LDO	41.1	48	
		SMPS	47.2	55	

1. Evaluated by characterization. Not tested in production.
2. Time to REGS change in PWR_SVMSR.
3. Time to VOSRDY = 1 in PWR_VOSR.

Table 77. Wake-up time using USART/LPUART(1)

Symbol	Parameter	Typ	Max	Unit
$t_{WUUSART}$ $t_{WULPUART}$	Wake-up time needed to calculate the maximum USART/LPUART baudrate that is needed to wake up from Stop mode when the USART/LPUART kernel clock source is HSI16/MSI.	-	(2)	µs

1. Specified by design. Not tested in production.
2. This wake-up time is the HSI16 (see *Table 82*) or the MSI (see *Table 83*) oscillator maximum startup time.

5.3.8 External clock timing characteristics

High-speed external user clock generated from an external source

In bypass mode, the HSE oscillator is switched off and the input pin is a standard GPIO.

The external clock signal has to respect the I/O characteristics in *Section 5.3.15: I/O port characteristics*. The recommended clock input waveform is shown in *Figure 19*.

Table 78. High-speed external user clock characteristics(1)

Symbol	Parameter	Conditions		Min	Typ	Max	Unit
f_{HSE_ext}	User external clock source frequency	Digital mode (HSEBYP = 1, HSEEXT = 1)	Voltage scaling range 1, 2, 3	-	-	55	MHz
		Analog mode (HSEBYP = 1, HSEEXT = 0)		4	-	50	
		-	Voltage scaling range 4	4(2)	-	25	
V_{HSEH}	OSC_IN input pin high-level voltage	Digital mode (HSEBYP = 1, HSEEXT = 1)	-	$0.7 \times V_{DD}$	-	V_{DD}	V
V_{HSEL}	OSC_IN input pin low-level voltage		-	V_{SS}	-	$0.3 \times V_{DD}$	
$t_{w(HSEH)}$ $t_{w(HSEL)}$	OSC_IN high or low time		Voltage scaling range 1, 2, 3	7	-	-	ns
			Voltage scaling range 4	18	-	-	

1. Specified by design. Not tested in production.
2. Only for analog mode. No minimum value in digital mode.

Figure 19. AC timing diagram for high-speed external clock source (digital mode)

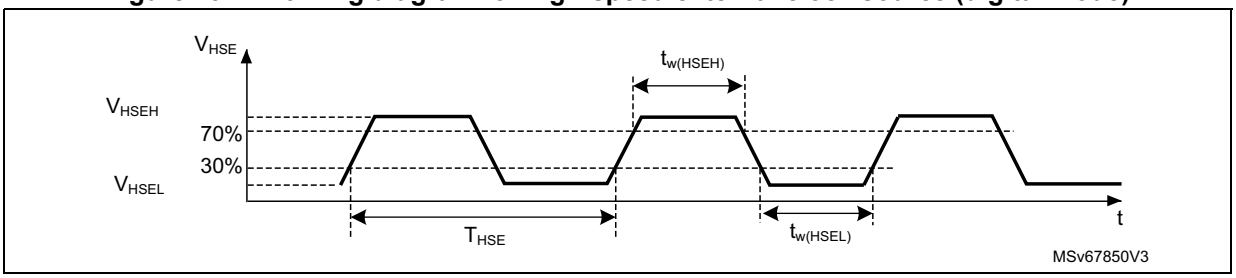

Figure 20. AC timing diagram for high-speed external clock source (analog mode)

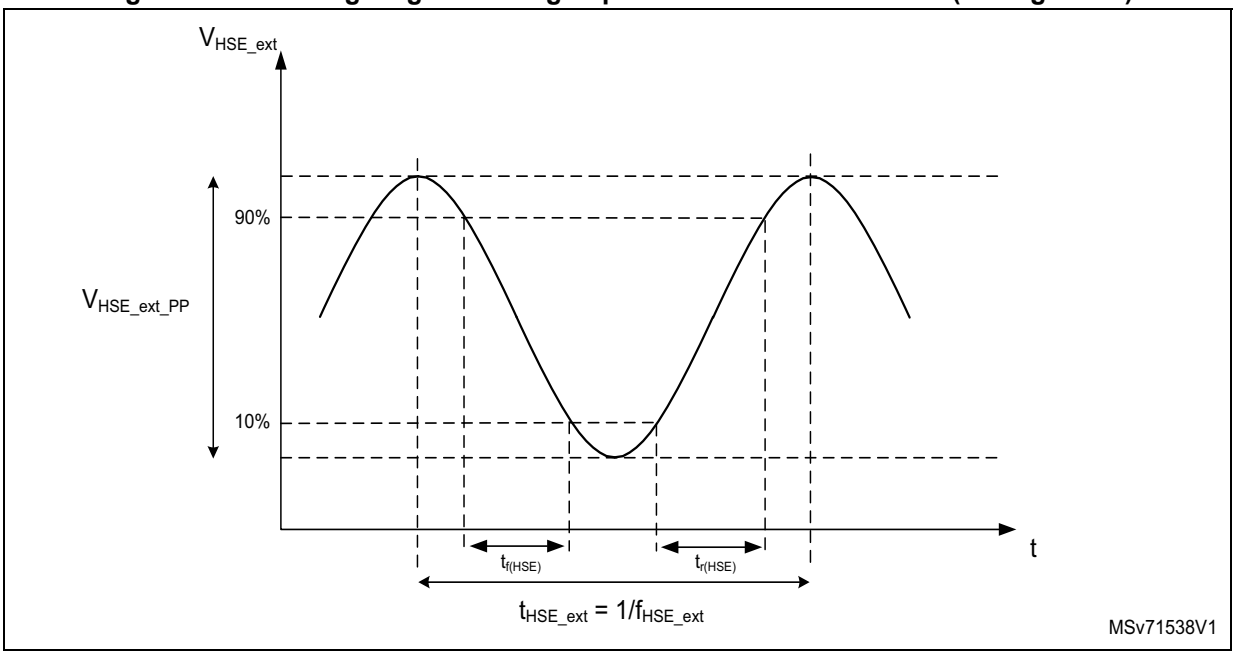

Low-speed external user clock generated from an external source

In bypass mode, the LSE oscillator is switched off and the input pin is a standard GPIO.

The external clock signal has to respect the I/O characteristics in *Section 5.3.15: I/O port characteristics*. The recommended clock input waveform is shown in *Figure 21* and *Figure 22*.

Table 79. Low-speed external user clock characteristics(1)

Symbol	Parameter	Min	Typ	Max	Unit
f_{LSE_ext}	User external clock source frequency	5	32.768	40	kHz
$V_{LSE_ext_PP}$	OSC32_IN peak-to-peak amplitude	0.3	-	V_{SW}	V
V_{LSE_ext}	OSC32_IN input range	0	-	V_{SW}(2)	
$t_{w(LSEH)}$ $t_{w(LSEL)}$	OSC32_IN high or low time for square signal input	10	-	-	ns

1. Specified by design. Not tested in production.
2. In case VBAT mode is used, V_{LSE_ext} must be lower than V_{BOR0} in order to respect this requirement when the switch to VBAT occurs.

Figure 21. AC timing diagram for low-speed external square clock source

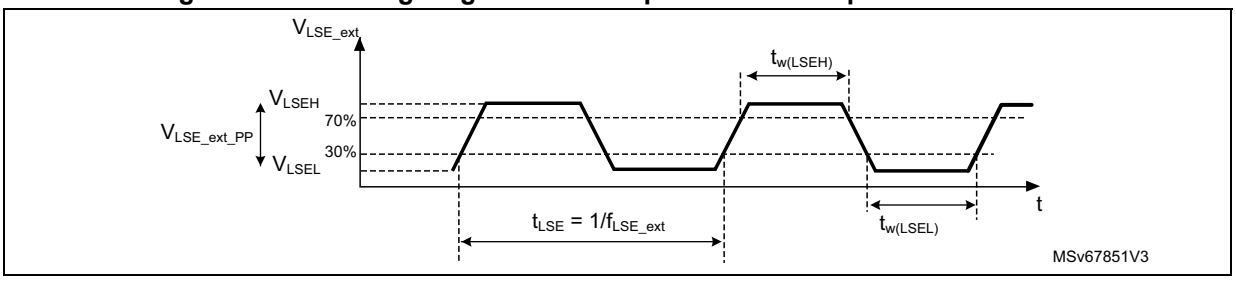

Figure 22. AC timing diagram for low-speed external sinusoidal clock source

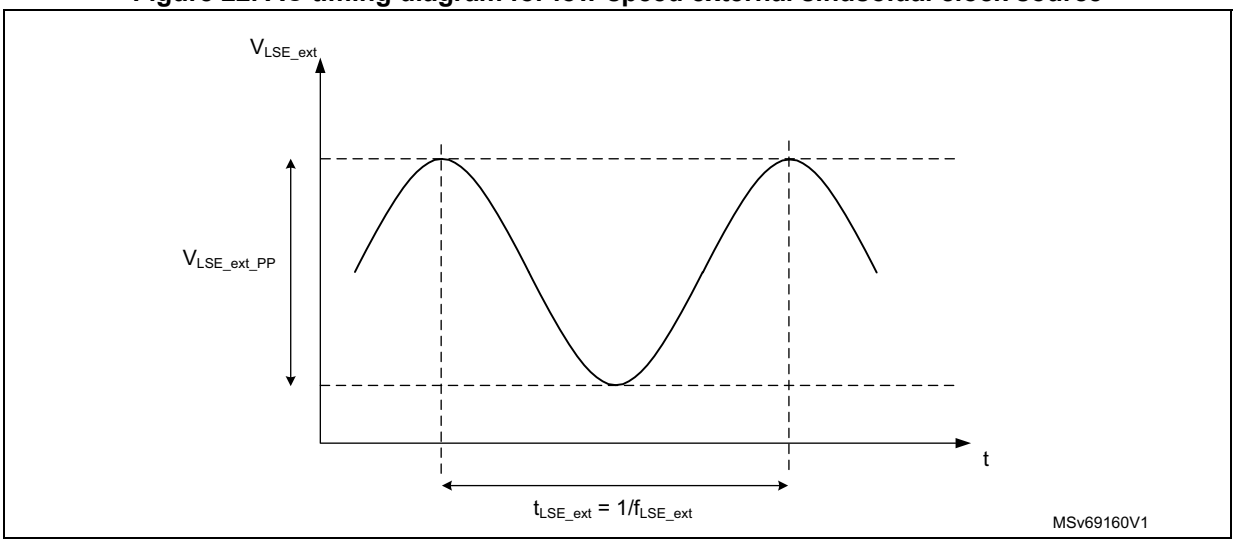

High-speed external clock generated from a crystal/ceramic resonator

The high-speed external (HSE) clock can be supplied with a 4 to 48 MHz crystal/ceramic resonator oscillator. All information given in this paragraph are based on design simulation results obtained with typical external components specified in the table below.

In the application, the resonator and the load capacitors have to be placed as close as possible to the oscillator pins, in order to minimize the output distortion and startup stabilization time. Refer to the crystal resonator manufacturer for more details on the resonator characteristics (frequency, package, accuracy).

Table 80. HSE oscillator characteristics(1)

Symbol	Parameter	Conditions(2)	Min	Typ	Max	Unit
f_{OSC_IN}	Oscillator frequency	-	4	-	50	MHz
R_F	Feedback resistor	-	-	200	-	kΩ

Table 80. HSE oscillator characteristics(1) (continued)

Symbol	Parameter	Conditions(2)	Min	Typ	Max	Unit
$I_{DD(HSE)}$	HSE current consumption	During startup(3)	-	-	8	mA
		V_{DD} = 3 V, Rm = 30 Ω, CL = 10 pF @ 4 MHz	-	790	-	µA
		V_{DD} = 3 V, Rm = 30 Ω, CL = 10 pF @ 8 MHz	-	910	-	
		V_{DD} = 3 V, Rm = 45 Ω, CL = 10 pF @ 8 MHz	-	930	-	
		V_{DD} = 3 V, Rm = 30 Ω, CL = 5 pF @ 48 MHz	-	1430	-	
		V_{DD} = 3 V, Rm = 30 Ω, CL = 10 pF @ 48 MHz	-	1960	-	
		V_{DD} = 3 V, Rm = 30 Ω, CL = 20 pF @ 48 MHz	-	3000	-	
$Gm_{critmax}$	Maximum critical crystal transconductance G_m	Startup	-	-	1.5	mA/V
$t_{su(HSE)}$ (4)	Startup time	V_{DD} stabilized	-	2	-	ms

1. Specified by design. Not tested in production.
2. Resonator characteristics given by the crystal/ceramic resonator manufacturer.
3. This consumption level occurs during the first 2/3 of the $t_{SU(HSE)}$ startup time.
4. $t_{SU(HSE)}$ is the startup time measured from the moment it is enabled (by software) to a stabilized 8 MHz oscillation is reached. This value is measured for a standard crystal resonator and it can vary significantly with the crystal manufacturer.

Note: For information on selecting the crystal, refer to the application note 'Oscillator design guide for STM8AF/AL/S, STM32 MCUs and MPUs' (AN2867).

Figure 23. Typical application with an 8 MHz crystal

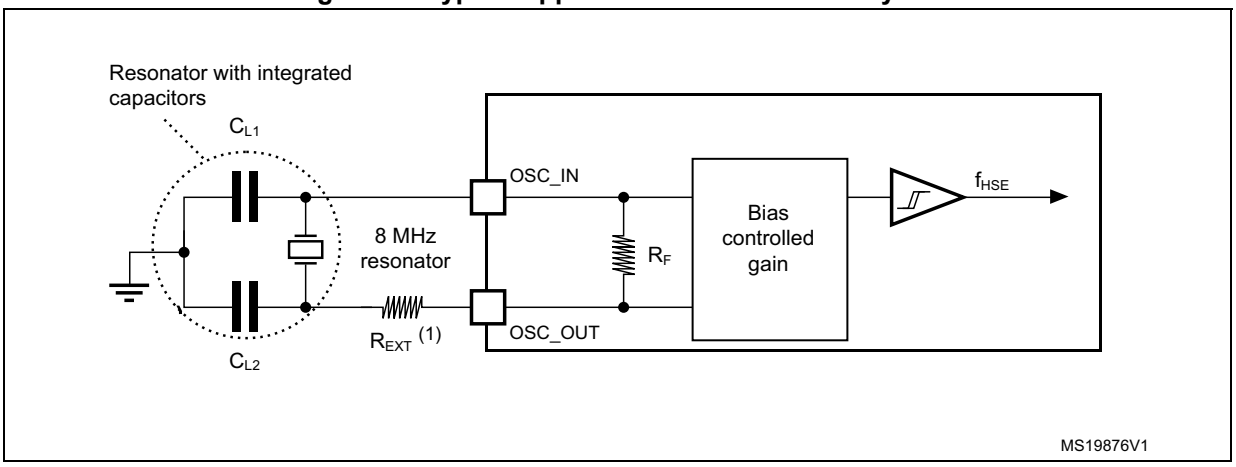

1. R_{EXT} value depends on the crystal characteristics.

Low-speed external clock generated from a crystal resonator

The low-speed external (LSE) clock can be supplied with a 32.768 kHz crystal resonator oscillator. All information given in this paragraph are based on design simulation results obtained with typical external components specified in the table below. In the application, the resonator and the load capacitors have to be placed as close as possible to the

oscillator pins in order to minimize output distortion and startup stabilization time. Refer to the crystal resonator manufacturer for more details on the resonator characteristics (frequency, package, accuracy).

Table 81. LSE oscillator characteristics (f_{LSE} = 32.768 kHz)(1)

Symbol	Parameter	Conditions(2)	Min	Typ	Max	Unit
$I_{DD(LSE)}$	LSE current consumption	LSEDRV[1:0] = 01, medium low-drive capability	-	350	-	nA
		LSEDRV[1:0] = 10, medium high-drive capability	-	450	-	
		LSEDRV[1:0] = 11, high-drive capability	-	600	-	
$Gm_{critmax}$	Maximum critical crystal Gm	LSEDRV[1:0] = 01, medium low-drive capability	-	-	0.75	µA/V
		LSEDRV[1:0] = 10, medium high-drive capability	-	-	1.7	
		LSEDRV[1:0] = 11, high-drive capability	-	-	2.7	
C_{S_PARA}	Internal stray parasitic capacitance(3)	-	-	3	-	pF
$t_{SU(LSE)}$(4)	Startup time	V_{DD} is stabilized	-	2	-	s

1. Specified by design. Not tested in production.
2. Refer to the note below this table.
3. C_{S_PARA} is the equivalent capacitance seen by the crystal due to OSC32_IN and OSC32_OUT internal parasitic capacitances.
4. $t_{SU(LSE)}$ is the startup time measured from the moment it is enabled (by software) to a stabilized 32.768 kHz oscillation is reached. This value is measured for a standard crystal and it can vary significantly with the crystal manufacturer

Note: For information on selecting the crystal, refer to the application note 'Oscillator design guide for STM8AF/AL/S, STM32 MCUs and MPUs' (AN2867).

Figure 24. Typical application with a 32.768 kHz crystal

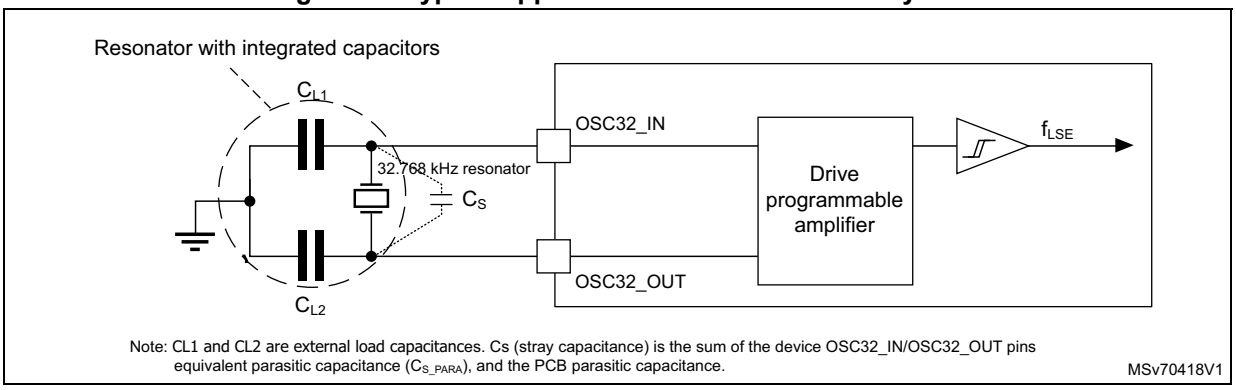

Note: An external resistor is not required between OSC32_IN and OSC32_OUT and it is forbidden to add one.

5.3.9 Internal clock timing characteristics

The parameters given in the table below are derived from tests performed under ambient temperature and supply voltage conditions summarized in *Table 33*. The provided curves are characterization results, not tested in production.

High-speed internal (HSI16) RC oscillator

Table 82. HSI16 oscillator characteristics

Symbol	Parameter	Conditions	Min	Typ	Max	Unit
f_{HSI16}	HSI16 frequency after factory calibration	V_{DD} = 3.0 V, T_J = 30 °C	15.92	16	16.08	MHz
f_{HSI16}(1)		T_J = –10 °C to 100 °C, 1.58 ≤ V_{DD} ≤ 3.6 V	15.84	-	16.16	
		T_J = –40 °C to 130 °C, 1.58 ≤ V_{DD} ≤ 3.6 V	15.65	-	16.25	
TRIM(2)	HSI16 user trimming step	-	18	29	40	kHz
$DuCy_{HSI16}$(2)	Duty cycle	-	45	-	55	%
$t_{su(HSI16)}$(2)	HSI16 oscillator startup time	-	-	2.5	3.6	µs
$t_{stab(HSI16)}$(2)	HSI16 oscillator stabilization time	At 1% of target frequency	-	4	6	
$I_{DD(HSI16)}$(2)	HSI16 oscillator power consumption	-	-	150	210	µA

1. Evaluated by characterization. Not tested in production. It does not take into account package and soldering effects.
2. Specified by design. Not tested in production.

Figure 25. HSI16 frequency versus temperature and V_{DD}

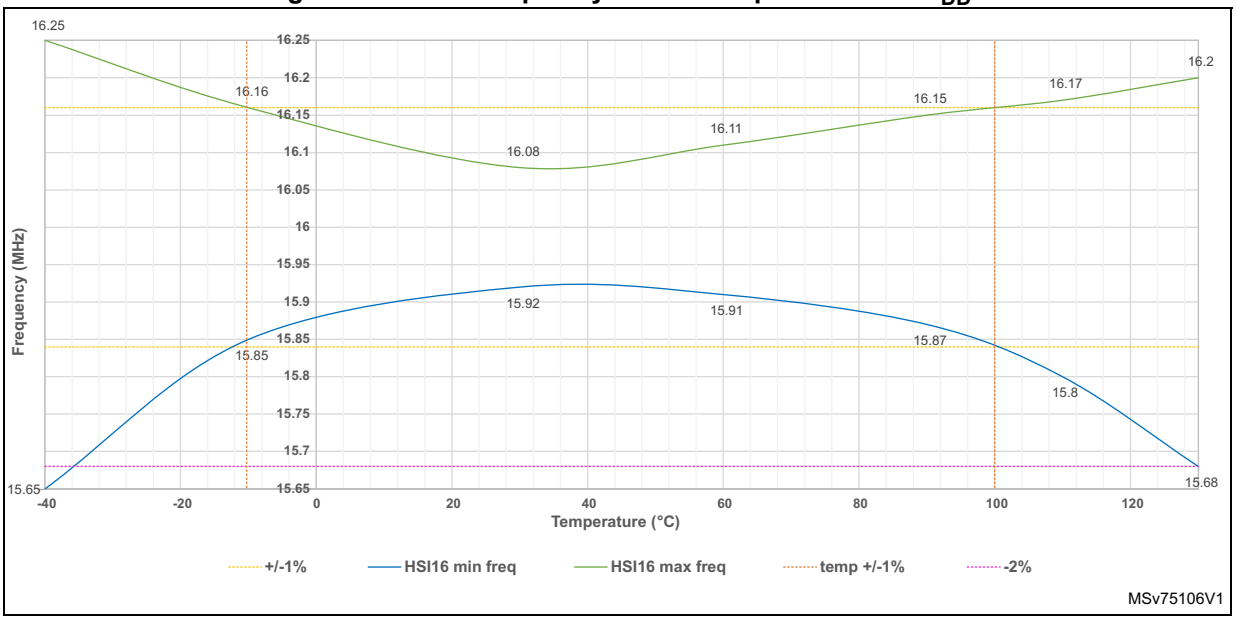

Multi-speed internal (MSI) RC oscillator

Table 83. MSI oscillator characteristics(1)

Symbol	Parameter	Conditions			Min	Typ	Max	Unit
f_{MSI}	MSI frequency after factory calibration	V_{DD} = 3 V T_J = 30 °C	MSI mode	MSI range 0 (MSIRC0)	47.74	48	48.70	MHz
				MSI range 1	23.87	24	24.35	
				MSI range 2	15.91	16	16.23	
				MSI range 3	11.93	12	12.17	
				MSI range 4 (MSIRC1)	3.98	4	4.06	
				MSI range 5	1.99	2	2.03	
				MSI range 6	1.33	1.33	1.35	
				MSI range 7	0.99	1	1.01	
				MSI range 8 (MSIRC2)	3.05	3.08	3.12	
				MSI range 9	1.53	1.54	1.56	
				MSI range 10	1.02	1.03	1.04	
				MSI range 11	0.76	0.77	0.78	
				MSI range 12 (MSIRC3)	397.68	400	405.71	kHz
				MSI range 13	198.84	200	202.86	
				MSI range 14	132.56	133	135.24	
				MSI range 15	99.42	100	101.43	
			PLL mode(2) XTAL = 32.768 kHz	MSI range 0 (MSIRC0)	-	48.005	-	MHz
				MSI range 1	-	24.003	-	
				MSI range 2	-	16.002	-	
				MSI range 3	-	12.001	-	
				MSI range 4 (MSIRC1)	-	3.998	-	
				MSI range 5	-	1.999	-	
				MSI range 6	-	1.333	-	
				MSI range 7	-	0.999	-	
				MSI range 8 (MSIRC2)	-	3.08	-	
				MSI range 9	-	1.54	-	
				MSI range 10	-	1.027	-	
				MSI range 11	-	0.77	-	

Table 83. MSI oscillator characteristics(1) (continued)

Symbol	Parameter	Conditions			Min	Typ	Max	Unit
$f_{MSI\ (cont'd)}$	MSI frequency after factory calibration	V_{DD} = 3 V T_J = 30 °C	PLL mode XTAL = 32.768 kHz	MSI range 12 (MSIRC3)	-	393	-	kHz
				MSI range 13	-	196.6	-	
				MSI range 14	-	131	-	
				MSI range 15	-	98.3	-	
$DuCy_{MSI}$(3)	Duty cycle	MSI range 0, 4, 8, or 12			38	-	62	%
		MSI range 2, 6, 10, or 14			31	-	69	
		Other MSI ranges			48	-	52	
TRIM	User trimming step	-			-	0.4	-	
$\Delta_{TEMP(MSI)}$(4)	MSI oscillator frequency drift over temperature (reference is 30 °C)	MSI mode	T_J = –40 to 130 °C		-4	-	2	
$\Delta_{VDD(MSI)}$(4)	MSI oscillator frequency drift over V_{DD} (reference is 3V)	MSI mode	MSI range 0 to 3	1.58 ≤ V_{DD} ≤ 3.6 V	-4	-	1	
				2.4 ≤ V_{DD} ≤ 3.6 V	-1	-	1	
			MSI range 4 to 7	1.58 ≤ V_{DD} ≤ 3.6 V	-3	-	1	
				2.4 ≤ V_{DD} ≤ 3.6 V	-1	-	1	
			MSI range 8 to 11	1.58 ≤ V_{DD} ≤ 3.6 V	-3	-	1	
				2.4 ≤ V_{DD} ≤ 3.6 V	-1	-	1	
			MSI range 12 to 15	1.58 ≤ V_{DD} ≤ 3.6 V	-3	-	1	
				2.4 ≤ V_{DD} ≤ 3.6 V	-1	-	1	
$\Delta_{FSAMPLING(MSI)}$(3)(4)	MSI frequency variation in sampling mode (MSIBIAS = 1)	MSI mode	T_J = –40 to 130 °C		-	-	0.2	
CC jitter(MSI)(3)	RMS cycle-to-cycle jitter	PLL mode	MSI range 0		-	60	-	ps
			MSI range 4		-	160	-	
			MSI range 8		-	200	-	
			MSI range 12		-	1100	-	
P jitter(MSI)(3)	RMS period jitter	PLL mode	MSI range 0		-	40	-	
			MSI range 4		-	130	-	
			MSI range 8		-	170	-	
			MSI range 12		-	800	-	

Table 83. MSI oscillator characteristics(1) (continued)

Symbol	Parameter	Conditions			Min	Typ	Max	Unit
$t_{su(MSI)}$(3)	MSI oscillator startup time(5)	MSI range 0 to 3			-	-	13 MSIRC0 cycles + 11 MSI cycles	cycles
		MSI range 4 to 7			-	-	4 MSIRC1 cycles + 11 MSI cycles	
		MSI range 8 to 11			-	-	4 MSIRC2 cycles + 11 MSI cycles	
		MSI range 12 to 15			-	-	4 MSIRC3 cycles + 11 MSI cycles	
$t_{switch(MSI)}$(3)	MSI oscillator transition time(6)	-			-	-	3 destina-tion MSI cycles	
$t_{stab(MSI)}$(3)	MSI oscillator stabilization time	Normal mode	Continuous mode(7)	Final frequency	-	-	10	µs
			Sampling mode(8)		-	-	200	
		PLL mode, MSIPLL FAST = 0	All MSI ranges	1% of final frequency	-	-	0.8	ms
		PLL mode, MSIPLL FAST = 1	All MSI ranges		2			cycles
$I_{DD(MSI_OFF_PLLFAST)}$(3)	MSI PLL-mode oscillator power consumption when MSI is disabled with PLL accuracy retention	MSIPLL EN = 1 and MSIPLL FAST = 1	LDO	MSI range 0 to 3	-	6.6	-	µA
				MSI range 4 to 7	-	1.6	-	
				MSI range 8 to 11	-	1.4	-	
				MSI range 12 to 15	-	0.8	-	
			SMPS	MSI range 0 to 3	-	4.7	-	
				MSI range 4 to 7	-	1.4	-	
				MSI range 8 to 11	-	1.3	-	
				MSI range 12 to 15	-	0.8	-	

Table 83. MSI oscillator characteristics(1) (continued)

Symbol	Parameter	Conditions			Min	Typ	Max	Unit
$I_{DD(MSI)}$(3)	MSI oscillator power consumption	Continuous mode(7)	LDO	MSI range 0 to 3	-	21 + 2.5 µA/MHz	-	µA
				MSI range 4 to 15	-	19 + 2.5 µA/MHz	-	
			SMPS(9)	MSI range 0 to 3	-	21 + 1,3 µA/MHz	-	
				MSI range 4 to 15	-	19 + 1,3 µA/MHz	-	
		Sampling mode(8)	LDO	Range 0 to 3	-	3 + 2.5 µA/MHz	-	
				Range 4 to 15	-	1 + 2.5µA/MHz	-	
			SMPS	Range 0 to 3	-	3 + 1 µA/MHz	-	
				Range 4 to 15	-	1 + 1 µA/MHz	-	

1. Evaluated by characterization and not tested in production, unless otherwise specified.
2. In PLL mode, the MSI accuracy is the LSE crystal accuracy.
3. Specified by design. Not tested in production.
4. This is a deviation for an individual part once the initial frequency has been measured.
5. The MSI startup time is the time when the four MSIRCs are in power down.
6. This delay is the time to switch from one MSIRC to another one. In case the destination MSIRC is in power down, the total delay is $t_{su(MSI)} + t_{switch(MSI)}$.
7. The MSI is in continuous mode when the internal regulator is in voltage range 1, 2 or 3.
8. The MSI is in sampling mode when MSIBIAS = 1 in RCC_ICSCR1, and the regulator is in voltage range 4, or when the device is in Stop 1 or Stop 2 mode.
9. SMPS efficiency in range 1, based on V_{CORE} current = 19.4 mA.

High-speed internal 48 MHz (HSI48) RC oscillator

Table 84. HSI48 oscillator characteristics

Symbol	Parameter	Conditions	Min	Typ	Max	Unit
f_{HSI48}	HSI48 frequency after factory calibration	V_{DD} = 3.0 V, T_J = 30 °C	47.5	48	48.5	MHz

Table 84. HSI48 oscillator characteristics (continued)

Symbol	Parameter	Conditions	Min	Typ	Max	Unit
TRIM(1)	User trimming step	-	-	0.12	0.18	%
USER TRIM COVERAGE(2)	User trimming coverage	±63 steps	±4.5	±7.56	-	
$DuCy_{HSI48}$(1)	Duty cycle	-	45	-	55	
ACC_{HSI48_REL} (2)	Accuracy of the HSI48 oscillator over temperature (factory calibrated) Reference is 3 V and 30 °C(3).	1.58 V ≤ V_{DD} ≤ 3.6 V, T_J = –40 to 125 °C	-3	-	2	
$\Delta_{VDD(HSI48)}$(1)	HSI48 frequency drift with V_{DD}(4)	3.0 V ≤ V_{DD} ≤ 3.6 V	-	0.025	0.05	
		1.58 V ≤ V_{DD} ≤ 3.6 V	-	0.05	0.1	
N_T jitter(1)	Next transition jitter Accumulated jitter on 28 cycles(5)	-	-	±0.15	-	ns
P_T jitter(1)	Paired transition jitter Accumulated jitter on 56 cycles(5)	-	-	±0.25	-	
$t_{su(HSI48)}$(1)	HSI48 oscillator startup time	-	-	2.5	6	µs
$I_{DD(HSI48)}$(1)	HSI48 oscillator power consumption	-	-	350	400	µA

1. Specified by design. Not tested in production.
2. Evaluated by characterization. Not tested in production.
3. $\Delta f_{HSI} = ACC_{HSI48_REL} + \Delta V_{DD}$.
4. These values are obtained with one of the following formula: (Freq(3.6 V) - Freq(3.0 V)) / Freq(3.0 V) or (Freq(3.6 V) - Freq(1.58 V)) / Freq(1.58 V).
5. Jitter measurements are performed without clock source activated in parallel.

Figure 26. HSI48 frequency versus temperature

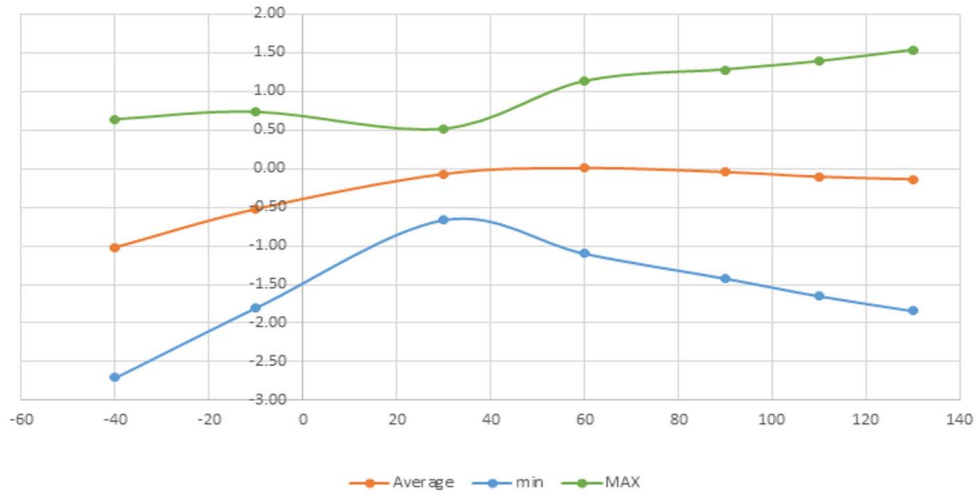

MSv69123V1

Secure high-speed internal (SHSI) RC oscillator

Table 85. SHSI oscillator characteristics(1)

Symbol	Parameter	Conditions	Min	Typ	Max	Unit
f_{SHSI}	SHSI frequency	-	-	48	-	MHz
$t_{SU(SHSI)}$	SHSI oscillator startup time	-	-	2.5	6	µs
$I_{DD(SHSI)}$	SHSI oscillator power consumption	-	-	350	400	µA

1. Specified by design. Not tested in production.

Low-speed internal (LSI) RC oscillator

Table 86. LSI oscillator characteristics

Symbol	Parameter	Conditions	Min	Typ	Max	Unit
f_{LSI}	LSI frequency	V_{DD} = 3.0 V, T_J = 30 °C, LSIPREDIV = 0	31.4	-	32.6	kHz
		V_{DD} = 3.0 V, T_J = 30 °C, LSIPREDIV = 1	0.245	-	0.255	
		1.58 V≤ V_{DD} ≤ 3.6 V, T_J = –40 to 125 °C	30.4(1)	-	33.6(1)	
$DuCy_{LSI}$	LSI duty cycle	LSIPREDIV = 1	-	50	-	%
$t_{SU(LSI)}$(2)	LSI oscillator startup time	-	-	230	260	µs
$t_{STAB(LSI)}$(2)	LSI oscillator stabilization time	5% of final frequency	-	230	260	
$I_{DD(LSI)}$(2)	LSI oscillator power consumption	LSIPREDIV = 0	-	140	255	nA
		LSIPREDIV = 1	-	130	240	

1. Evaluated by characterization. Not tested in production.
2. Specified by design. Not tested in production.

5.3.10 PLL characteristics

The parameters given in the table below are derived from tests performed under temperature and V_{DD} supply voltage conditions summarized in *Table 33*.

Table 87. PLL characteristics(1)

Symbol	Parameter	Conditions	Min	Typ	Max	Unit
f_{PLL_IN}	PLL input clock	-	4	-	16	MHz
	PLL input clock duty cycle	-	10	-	90	%
f_{PLL_OUT}	PLL P, Q, R output clock	Voltage scaling range 1	1	-	160(2)	MHz
		Voltage scaling range 2	1	-	110	
		Voltage scaling range 3	1	-	55	
f_{VCO_OUT}	PLL VCO output	Voltage scaling range 1, 2	128	-	544	
		Voltage scaling range 3	128	-	330	
		Duty cycle with division 1	40	-	60	%

Table 87. PLL characteristics(1) (continued)

Symbol	Parameter	Conditions		Min	Typ	Max	Unit
t_{LOCK}(3)(4)	PLL lock time	Integer mode		-	25	50	µs
		Fractional mode		-	40	65	
Jitter	RMS cycle-to-cycle jitter	Integer mode, VCO = 544 MHz		-	20	-	±ps
		Fractional mode, VCO = 544 MHz		-	70	-	
	RMS period jitter	Integer mode, VCO = 544 MHz		-	35	-	
		Fractional mode, VCO = 544 MHz		-	45	-	
	Long-term jitter(5), f_{PLL_IN} = 8 MHz	Integer mode, VCO = 544 MHz		-	160	-	
		Fractional mode, VCO = 544 MHz		-	170	-	
$I_{DD(PLL)}$	PLL power consumption on V_{DD} with LDO	VCO freq = 160 MHz, 1 clock output	Range 1	-	370	-	µA
		VCO freq = 160 MHz, 3 clock outputs	Range 1	-	390	-	
		VCO freq = 200 MHz, 1 clock output	Range 1	-	460	-	
			Range 2	-	435	-	
			Range 3	-	410	-	
		VCO freq = 336 MHz, 1 clock output	Range 1	-	710	-	
		VCO freq = 544 MHz, 1 clock output	Range 1	-	1100	-	
$I_{DD(PLL)}$	PLL power consumption on V_{DD} with SMPS	VCO freq = 160 MHz, 1 clock output	Range 1, I_{VCORE}(6) = 19.4 mA	-	260	-	
		VCO freq = 160 MHz, 3 clock outputs	Range 1, I_{VCORE}(6) = 19.4 mA	-	270	-	
		VCO freq = 200 MHz, 1 clock output	Range 1, I_{VCORE}(6) = 19.4 mA	-	320	-	
			Range 2, I_{VCORE}(6) = 11.7 mA	-	300	-	
			Range 3, I_{VCORE}(6) = 5.74 mA	-	290	-	
		VCO freq = 336 MHz, 1 clock output	Range 1, I_{VCORE}(6) = 19.4 mA	-	470	-	
		VCO freq = 544 MHz, 1 clock output	Range 1, I_{VCORE}(6) = 19.4 mA	-	730	-	

1. Specified by design and not tested in production, unless otherwise specified.
2. PLL1 output Q and PLL2 output Q can be up to 200 MHz only when selected as OCTOSPI clock.
3. Evaluated by characterization. Not tested in production.
4. Lock time is the duration until PLLxRDY flag (2% of final frequency).
5. Measured on 5000 cycles.
6. SMPS efficiency based on CoreMark RUN current on V_{CORE} at max frequency of each voltage range.

5.3.11 Flash memory characteristics

Table 88. Flash memory characteristics(1)

Symbol	Parameter	Conditions	Typ	Max(2)	Unit
t_{prog}	128-bit programming time	Normal mode	118	119	µs
		Burst mode	47	48	
t_{prog_page}	One 8-Kbyte page programming time	f_{AHB} = 160 MHz, normal mode	60.2	-	ms
		f_{AHB} = 160 MHz, burst mode	24.5	-	
t_{prog_bank}	One 2-Mbyte bank programming time	f_{AHB} = 160 MHz, normal mode	15420	-	
		f_{AHB} = 160 MHz, burst mode	6280	-	
t_{ERASE}	One 8-Kbyte page erase time	10 k endurance cycles	1.5	2.4	
		100 k endurance cycles	1.7	3.4	
t_{ME}	Mass erase time (one bank)	10 k endurance cycles	220	616	
	Mass erase time (two banks)		440	1230	
I_{DD}(3)	Average consumption from V_{DD}	Write mode	2.1	-	mA
		Erase mode	1.3	-	
	Maximum current (peak)	Write mode	2.6	-	
		Erase mode	3.0	-	

1. Specified by design. Not tested in production.
2. Evaluated by characterization after cycling. Not tested in production.
3. Evaluated by characterization. Not tested in production.

Table 89. Flash memory endurance and data retention

Symbol	Parameter	Conditions		Min(1)	Unit
N_{END}	Endurance	Whole bank	T_A = –40 to 125 °C	10	kcycles
		Limited to 256 Kbytes per bank		100	
t_{RET}	Data retention	Whole bank	T_A = 85 °C after 1 kcycle(2)	30	Years
			T_A = 105 °C after 1 kcycle(2)	15	
			T_A = 125 °C after 1 kcycle(2)	10	
			T_A = 55 °C after 10 kcycle(2)	30	
			T_A = 85 °C after 10 kcycle(2)	15	
			T_A = 105 °C after 10 kcycle(2)	10	
		Limited to 256 Kbytes per bank	T_A = 55 °C after 100 kcycle(2)	30	
			T_A = 85 °C after 100 kcycle(2)	15	
			T_A = 105 °C after 100 kcycle(2)	10	

1. Evaluated by characterization. Not tested in production.
2. Cycling performed over the whole temperature range.

5.3.12 EMC characteristics

Susceptibility tests are performed on a sample basis during device characterization.

Functional EMS (electromagnetic susceptibility)

While a simple application is executed on the device (toggling two LEDs through the I/O ports), the device is stressed by two electromagnetic events until a failure occurs. The failure is indicated by the LEDs as follows:

- Electrostatic discharge (ESD) (positive and negative): applied to all device pins until a functional disturbance occurs. This test is compliant with the IEC 61000-4-2 standard.
- FTB (fast transient voltage burst) (positive and negative): applied to VDD and VSS pins through a 100 pF capacitor, until a functional disturbance occurs. This test is compliant with the IEC 61000-4-4 standard.

A device reset allows normal operations to be resumed.

The test results are given in the table below. They are based on the EMS levels and classes defined in application note *EMC design guide for STM8, STM32 and Legacy MCUs (*AN1709).

Table 90. EMS characteristics

Symbol	Parameter	Conditions	Level/ Class
V_{FESD}	Voltage limits to be applied on any I/O pin to induce a functional disturbance	V_{DD} = 3.3 V, T_A = +25 °C, f_{HCLK} = 160 MHz, TFBGA216 conforming to IEC 61000-4-2	3B
V_{EFTB}	Fast transient voltage burst limits to be applied through 100 pF on V_{DD} and V_{SS} pins to induce a functional disturbance	V_{DD} = 3.3 V, T_A = +25 °C, f_{HCLK} = 160 MHz, TFBGA216 conforming to IEC 61000-4-4	5A

Designing hardened software to avoid noise problems

The EMC characterization and optimization are performed at component level with a typical application environment and simplified MCU software. Note that good EMC performance is highly dependent on the user application and the software in particular.

Therefore it is recommended that the user applies EMC software optimization and prequalification tests in relation with the EMC level requested for the application.

Software recommendations

The software flowchart must include the management of runaway conditions such as:

- Corrupted program counter
- Unexpected reset
- Critical data corruption (control registers)

Prequalification trials

Most of the common failures (unexpected reset and program counter corruption) can be reproduced by manually forcing a low state on the NRST pin or the oscillator pins for 1 second.

To complete these trials, ESD stress can be applied directly on the device, over the range of specification values. When unexpected behavior is detected, the software can be hardened

to prevent unrecoverable errors occurring. See application note *Software techniques for improving microcontrollers EMC performance* (AN1015) for more details.

Electromagnetic Interference (EMI)

The electromagnetic field emitted by the device is monitored while a simple application is executed (toggling two LEDs through the I/O ports). This emission test is compliant with IEC 61967-2 standard that specifies the test board and the pin loading.

Table 91. EMI characteristics (for f_{HSE} = 8 MHz, f_{HCLK} = 160 MHz)

Symbol	Parameter	Conditions	Monitored frequency band	Value	Unit
S_{EMI}	Peak(1)	V_{DD} = 3.6 V, T_A = 25 °C, TFBGA216 package compliant with IEC 61967-2	0.1 MHz to 30 MHz	3	dBµV
			30 MHz to 130 MHz	13	
			130 MHz to 1 GHz	14	
			1 GHz to 2 GHz	11	
	Level(2)		0.1 MHz to 2 GHz	2.5	-

1. Refer to the 'EMI radiated test' section of the application note *EMC design guide for STM8, STM32 and legacy MCUs* (AN1709).
2. Refer to the 'EMI level classification' section of the same application note AN1709.

5.3.13 Electrical sensitivity characteristics

Based on three different tests (ESD, latch-up) using specific measurement methods, the device is stressed in order to determine its performance in terms of electrical sensitivity.

Electrostatic discharge (ESD)

Electrostatic discharges (a positive then a negative pulse separated by 1 second) are applied to the pins of each sample according to each pin combination. The sample size depends on the number of supply pins in the device (3 parts × (n+1) supply pins). This test conforms to the ANSI/JEDEC standard.

Table 92. ESD absolute maximum ratings

Symbol	Ratings	Conditions	Packages	Class	Max. value(1)	Unit
$V_{ESD(HBM)}$	Electrostatic discharge voltage (human body model)	T_A = +25 °C, conforming to ANSI/ESDA/JEDEC JS-001	All	2	2000	V
$V_{ESD(CDM)}$	Electrostatic discharge voltage (charge device model)	T_A = +25 °C, conforming to ANSI/ESDA/JEDEC JS-002	LPQF100	C2a	500	
			LQFP144	C1	250	
			UFBGA144	TBD	TBD	
			WLCSP208	C1	250	
			TFBGA216	C2a	500	

1. Evaluated by characterization. Not tested in production.

Static latch-up

The following complementary static tests are required on three parts to assess the latch-up performance:

- A supply overvoltage is applied to each power supply pin.
- A current injection is applied to each input, output and configurable I/O pin.

These tests are compliant with EIA/JESD 78E IC latch-up standard.

Table 93. Electrical sensitivities(1)

Symbol	Parameter	Conditions	Class
LU	Static latch-up class	T_J = 130 °C conforming to JESD78E	Class II level A

1. Evaluated by characterization. Not tested in production.

5.3.14 I/O current injection characteristics

As a general rule, the current injection to the I/O pins, due to external voltage below V_{SS} or above V_{DDIOx} (for standard, 3.3 V-capable I/O pins) must be avoided during normal product operation. However, in order to give an indication of the robustness of the microcontroller if abnormal injection accidentally happens, some susceptibility tests are performed on a sample basis during the device characterization.

Functional susceptibility to I/O current injection

While a simple application is executed on the device, the device is stressed by injecting current into the I/O pins programmed in floating-input mode. While this current is injected into the I/O pin, one at a time, the device is checked for functional failures.

The failure is indicated by an out-of-range parameter, such as an ADC error above a certain limit (higher than 5 LSB TUE), out of conventional limits of induced leakage current on adjacent pins (out of the -5 µA/+0 µA range), or other functional failure (for example reset occurrence or oscillator frequency deviation).

The characterization results are given in the table below. The negative induced leakage current is caused by the negative injection.The positive induced leakage current is caused by the positive injection.

Table 94. I/O current injection susceptibility(1)(2)

Symbol	Description	Functional susceptibility		Unit
		Negative injection	Positive injection	
I_{INJ}	Injected current on all pins except TT_a, PA4, PA5, DSI_DN_DL1, DSI_DP_DL1, DSI_DN_CL1, DSI_DP_CL1, DSI_DN_DL2, DSI_DP_DL2, OPAMP1_VINM, OPAMP2_VINM, PA11, PA12, PE11, PE12, PE7,PB14, PB5, PA1	5	NA	mA
	Injected current on TT_a, PA4, PA5, DSI_DN_DL1, DSI_DP_DL1, DSI_DN_CL1, DSI_DP_CL1, DSI_DN_DL2, DSI_DP_DL2, OPAMP1_VINM, OPAMP2_VINM, PA11, PA12 pins	0	0	
	Injected current on PE11, PE12, PE7 pins	0	NA	
	Injected current on PB14, PB5, PA1 pins	5	0	

1. Evaluated by characterization. Not tested in production.
2. The I/O structure options listed in this table can be a concatenation of options including the option explicitly listed. For instance TT_a refers to any TT I/O with _a option. TT_xx refers to any TT I/O and FT_xx refers to any FT I/O.

5.3.15 I/O port characteristics

General input/output characteristics

Unless otherwise specified, the parameters given in the table below are derived from tests performed under the conditions summarized in *Table 33*. All I/Os are designed as CMOS -and TTL-compliant.

Note: For information on GPIO configuration, refer to the application note 'STM32 GPIO configuration for hardware settings and low-power consumption' (AN4899).

Table 95. I/O static characteristics(1)

Sym-bol	Parameter	Conditions	Min	Typ	Max	Unit
V_{IL}(2)	I/O input low-level voltage	1.08 V ≤ V_{DDIOx} ≤ 3.6 V	-	-	0.3 V_{DDIOx}	V
		All I/Os except FT_c	-	-	0.38 V_{DDIOx}(3)	
		FT_c I/Os	-	-	0.3 V_{DDIOx}	
V_{IH} (2)	I/O input high-level voltage	1.08 V ≤ V_{DDIOx} ≤ 3.6 V	0.7 V_{DDIOx}	-	-	
		All I/Os except FT_c	0.5 V_{DDIOx} + 0.2(3)	-	-	
		FT_c I/Os	0.7 V_{DDIOx}	-	-	
V_{hys} (3)	Input hysteresis	TT_xx, FT_xx I/Os	-	250	-	mV

Table 95. I/O static characteristics(1) (continued)

Sym-bol	Parameter	Conditions		Min	Typ	Max	Unit
I_{lkg} (3)(4)	Input leakage current	all I/Os except FT_u, FT_c, FT_d, FT_t, TT_xx	$V_{IN} \leq$ Max (V_{DDXXX})(5)	-	-	150	nA
			Max (V_{DDXXX}) < V_{IN} ≤ Max (V_{DDXXX}) + 1 V(6)	-	-	2000	
			Max (V_{DDXXX}) + 1 V < V_{IN} ≤ 5.5 V(6)	-	-	500	
		FT_u I/Os	$V_{IN} \leq$ Max (V_{DDXXX})(5)	-	-	200	
			Max (V_{DDXXX}) < V_{IN} ≤ Max (V_{DDXXX}) + 1 V(6)	-	-	2500	
			Max (V_{DDXXX}) + 1 V < V_{IN} ≤ 5.5 V(6)	-	-	500	
		FT_c I/Os	$V_{IN} \leq$ Max (V_{DDXXX})	-	-	1500	
			Max (V_{DDXXX}) < V_{IN} ≤ 5 V(6)	-	-	2000	
		FT_d I/Os	$V_{IN} \leq$ Max (V_{DDXXX})	-	-	1500	
			Max (V_{DDXXX}) < V_{IN} ≤ 5.5 V(6)	-	-	5000	
		FT_t I/Os	$V_{IN} \leq$ Max (V_{DDXXX})	-	-	300	
			Max (V_{DDXXX}) < V_{IN} ≤ Max (V_{DDXXX}) + 1 V(6)	-	-	3000	
			Max (V_{DDXXX}) + 1 V < V_{IN} ≤ 5.5 V(6)	-	-	600	
I_{lkg} (3)(4)	Input leakage current	TT_xx I/Os except OPAMPx_VINM (x = 1, 2)	$V_{IN} \leq$ Max (V_{DDXXX})	-	-	500	
		OPAMPx_VINM (x = 1, 2) dedicated input leakage current		-	-	(7)	
R_{PU}	Weak pull-up equivalent	-		30	40	50	kΩ
R_{PD}	Weak pull-down equivalent resistor(8)	-		30	40	50	
C_{IO}	I/O pin capacitance	-		-	5	-	pF

1. The I/O structure options listed in this table can be a concatenation of options including the option explicitly listed. For instance TT_a refers to any TT I/O with _a option. TT_xx refers to any TT I/O and FT_xx refers to any FT I/O.
2. Refer to *Figure 27: I/O input characteristics (all I/Os except FT_c)*.
3. Specified by design. Not tested in production.
4. This parameter represents the pad leakage of the I/O itself. The total product pad leakage is provided by the following formula: $I_{Total_Ileak_max}$ = 10 µA + [number of I/Os where VIN is applied on the pad] x I_{lkg} max.
5. Max (V_{DDXXX}) is the maximum value of all the I/O supplies. The I/O supplies depend on the I/O structure options, as described in *Table 26: Legend/abbreviations used in the pinout table*.
6. To sustain a voltage higher than Min (V_{DD}, V_{DDA}, V_{DDUSB}, V_{DDIO2}) +0.3 V, the internal pull-up and pull-down resistors must be disabled.

7. Refer to I_{bias} in the OPAMP characteristics table for the values of the OPAMP dedicated input leakage current.
8. The pull-up and pull-down resistors are designed with a true resistance in series with a switchable PMOS/NMOS. This PMOS/NMOS contribution to the series resistance is minimal (~10% order).

All I/Os are CMOS- and TTL-compliant (no software configuration required). Their characteristics cover more than the strict CMOS-technology or TTL parameters. The coverage of these requirements is shown in the figure below.

Figure 27. I/O input characteristics (all I/Os except FT_c)

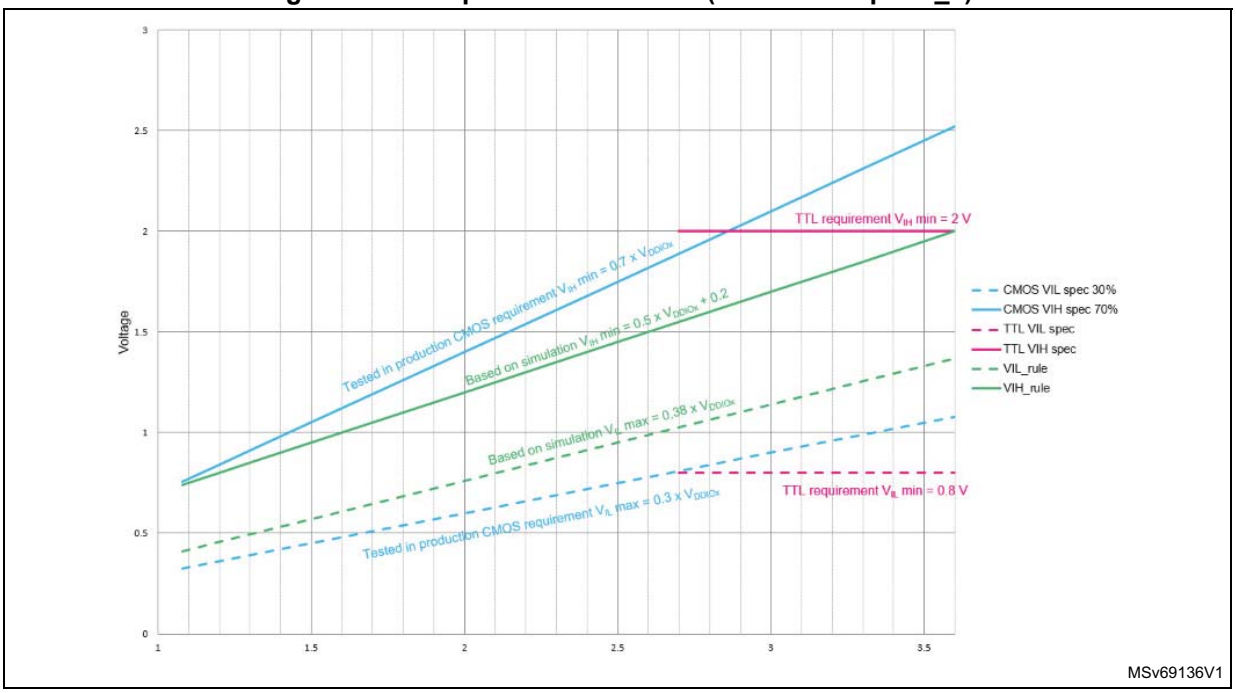

Output driving current

The GPIOs (except PC13, PC14, PC15) can sink or source up to ±8 mA, and sink or source up to ± 20 mA (with a relaxed V_{OL}/V_{OH}). PC13, PC14, PC15 are limited in source capability: +3 mA shared between the three I/Os. These GPIOs have the same sink capability than other GPIOs.

In the user application, the number of I/O pins tat can drive current must be limited to respect the absolute maximum rating specified in *Section 5.2: Absolute maximum ratings*:

- The sum of the currents sourced by all the I/Os on $V_{DDIOx,}$ plus the maximum consumption of the MCU sourced on $V_{DD,}$ cannot exceed the absolute maximum rating ΣI_{VDD} (see *Table 31: Current characteristics*).
- The sum of the currents sunk by all the I/Os on V_{SS}, plus the maximum consumption of the MCU sunk on V_{SS}, cannot exceed the absolute maximum rating ΣI_{VSS} (see *Table 31: Current characteristics*).

Output voltage levels

Unless otherwise specified, the parameters given in the table below are derived from tests performed under the ambient temperature and supply voltage conditions summarized in *Table 33*. All I/Os are CMOS- and TTL-compliant (FT OR TT unless otherwise specified).

Table 96. Output voltage characteristics (all I/Os except FT_t I/Os in V_{BAT} mode(1) and FT_o I/Os) (2)(3)

Symbol	Parameter	Conditions	Min	Max	Unit
V_{OL}	Output low-level voltage	CMOS port(4), $\|I_{IO}\|$ = 8 mA, 2.7 V ≤ V_{DDIOx} ≤ 3.6 V	-	0.4	V
V_{OH}	Output high-level voltage		V_{DDIOx} - 0.4	-	
V_{OL}(5)	Output low-level voltage	TTL port(4),$\|I_{IO}\|$ = 8 mA, 2.7 V ≤ V_{DDIOx} ≤ 3.6 V	-	0.4	
V_{OH}(5)	Output high-level voltage		2.4	-	
V_{OL}(5)	Output low-level voltage	All I/Os, $\|I_{IO}\|$ = 20 mA, 2.7 V ≤ V_{DDIOx} ≤ 3.6 V	-	1.3	
V_{OH}(5)	Output high-level voltage		V_{DDIOx} - 1.3	-	
V_{OL}(5)	Output low-level voltage	$\|I_{IO}\|$ = 4 mA, 1.58 V ≤ V_{DDIOx} ≤ 3.6 V	-	0.4	
V_{OH}(5)	Output high-level voltage		V_{DDIOx} - 0.4	-	
V_{OL}(5)	Output low-level voltage	$\|I_{IO}\|$ = 1 mA, 1.08 V ≤ V_{DDIOx} <3.6 V	-	0.4	
V_{OH}(5)	Output high-level voltage		V_{DDIOx} - 0.4	-	
V_{OLFM+}(5)	Output low-level voltage for a FT_f I/O pin in FM+ mode	$\|I_{IO}\|$ = 20 mA, 2.7 V ≤ V_{DDIOx} ≤ 3.6 V	-	0.4	
		$\|I_{IO}\|$ = 10 mA, 1.58 V ≤ V_{DDIOx} ≤ 3.6 V	-	0.4	
		$\|I_{IO}\|$ = 2 mA, 1.08 V ≤ V_{DDIOx} < 3.6 V	-	0.4	

1. FT_t I/O characteristics are degraded only in V_{BAT} mode (refer to *Table 97*).
2. The I/O structure options listed in this table can be a concatenation of options including the option explicitly listed. For instance TT_a refers to any TT I/O with _a option. TT_xx refers to any TT I/O and FT_xx refers to any FT I/O.
3. The I_{IO} current sourced or sunk by the device must always respect the absolute maximum rating specified in *Table 31: Current characteristics*, and the sum of the currents sourced or sunk by all the I/Os (I/O ports and control pins) must always respect the absolute maximum ratings ΣI_{IO}.
4. TTL and CMOS outputs are compatible with JEDEC standards JESD36 and JESD52.
5. Specified by design. Not tested in production.

Table 97. Output voltage characteristics for FT_t I/Os in V_{BAT} mode, and for FT_o I/Os(1)

Symbol	Parameter	Conditions	Min	Max	Unit
V_{OL}	Output low-level voltage	$\|I_{IO}\|$ = 0.5 mA, 2.7 V ≤ V_{SW} ≤ 3.6 V	-	0.4	V
V_{OH}	Output high-level voltage		V_{SW} - 0.4	-	
V_{OL}	Output low-level voltage	$\|I_{IO}\|$ = 0.25 mA, 1.58 V ≤ V_{SW}≤ 3.6 V	-	0.4	
V_{OH}	Output high-level voltage		V_{SW} - 0.4	-	

1. Specified by design. Not tested in production.

Output AC characteristics

The definition and values of output AC characteristics are given in *Figure 28: Output AC characteristics definition* and in the table below respectively.

Unless otherwise specified, the parameters given are derived from tests performed under the ambient temperature and supply voltage conditions summarized in *Table 33*.

Table 98. Output AC characteristics, HSLV OFF (all I/Os except FT_c, FT_t in V_{BAT} mode and FT_o I/Os(1))(2)(3)(4)

Speed	Symbol	Parameter	Conditions	Min	Max	Unit
00	Fmax	Maximum frequency all I/Os	C_L = 50 pF, 2.7 V ≤ V_{DDIOx} ≤ 3.6 V	-	12.5	MHz
			C_L = 50 pF, 1.58 V ≤ V_{DDIOx} < 2.7 V	-	5	
			C_L = 50 pF, 1.08 V ≤ V_{DDIOx} < 1.58 V	-	1	
			C_L = 10 pF, 2.7 V ≤ V_{DDIOx} ≤ 3.6 V	-	12.5	
			C_L = 10 pF, 1.58 V ≤ V_{DDIOx} < 2.7 V	-	5	
			C_L = 10 pF, 1.08 V ≤ V_{DDIOx} < 1.58 V	-	1	
	t_r/t_f	Output rise and fall time all I/Os	C_L = 50 pF, 2.7 V ≤ V_{DDIOx} ≤ 3.6 V	-	17	ns
			C_L = 50 pF, 1.58 V ≤ V_{DDIOx} < 2.7 V	-	33	
			C_L = 50 pF, 1.08 V ≤ V_{DDIOx} < 1.58 V	-	85	
			C_L = 10 pF, 2.7 V ≤ V_{DDIOx} ≤ 3.6 V	-	12.5	
			C_L = 10 pF, 1.58 V ≤ V_{DDIOx} < 2.7 V	-	25	
			C_L = 10 pF, 1.08 V ≤ V_{DDIOx} < 1.58 V	-	50	
01	Fmax	Maximum frequency all I/Os	C_L = 30 pF, 2.7 V ≤ V_{DDIOx} ≤ 3.6 V	-	55	MHz
			C_L = 30 pF, 1.58 V ≤ V_{DDIOx} < 2.7 V	-	12.5	
			C_L = 30 pF, 1.08 V ≤ V_{DDIOx} < 1.58 V	-	2.5	
			C_L = 10 pF, 2.7 V ≤ V_{DDIOx} ≤ 3.6 V	-	55	
			C_L = 10 pF, 1.58 V ≤ V_{DDIOx} < 2.7 V	-	12.5	
			C_L = 10 pF, 1.08 V ≤ V_{DDIOx} ≤<1.58 V	-	2.5	
	t_r/t_f	Output rise and fall time all I/Os	C_L = 30 pF, 2.7 V ≤ V_{DDIOx} ≤ 3.6 V	-	5.8	ns
			C_L = 30 pF, 1.58 V ≤ V_{DDIOx} < 2.7 V	-	10	
			C_L = 30 pF, 1.08 V ≤ V_{DDIOx} < 1.58 V	-	18	
			C_L = 10 pF, 2.7 V ≤ V_{DDIOx} ≤ 3.6 V	-	4.2	
			C_L = 10 pF, 1.58 V ≤ V_{DDIOx} < 2.7 V	-	7.5	
			C_L = 10 pF, 1.08 V ≤ V_{DDIOx} < 1.58 V	-	12	

Table 98. Output AC characteristics, HSLV OFF (all I/Os except FT_c, FT_t in V_{BAT} mode and FT_o I/Os[1])[2][3][4] (continued)

Speed	Symbol	Parameter	Conditions	Min	Max	Unit
10	Fmax	Maximum frequency all I/Os	C_L = 30 pF, 2.7 V ≤ V_{DDIOx} ≤ 3.6 V	-	100[5]	MHz
			C_L = 30 pF, 1.58 V ≤ V_{DDIOx} < 2.7 V	-	33[5]	
			C_L = 30 pF, 1.08 V ≤ V_{DDIOx} < 1.58 V	-	5	
			C_L = 10 pF, 2.7 V ≤ V_{DDIOx} ≤ 3.6 V	-	133[5]	
			C_L = 10 pF, 1.58 V ≤ V_{DDIOx} < 2.7 V	-	40[5]	
			C_L = 10 pF, 1.08 V ≤ V_{DDIOx} < 1.58 V	-	5	
	t_r/t_f	Output rise and fall time all I/Os	C_L = 30 pF, 2.7 V ≤ V_{DDIOx} ≤ 3.6 V	-	3.3[5]	ns
			C_L = 30 pF, 1.58 V ≤ V_{DDIOx} < 2.7 V	-	6.0[5]	
			C_L = 30 pF, 1.08 V ≤ V_{DDIOx} < 1.58 V	-	13.3	
			C_L = 10 pF, 2.7 V ≤ V_{DDIOx} ≤ 3.6 V	-	2[5]	
			C_L = 10 pF, 1.58 V ≤ V_{DDIOx} < 2.7 V	-	4.1[5]	
			C_L = 10 pF, 1.08 V ≤ V_{DDIOx} < 1.58 V	-	9.2	
11	Fmax	Maximum frequency All I/Os except FT_c, FT_v, and TT_v	C_L = 30 pF, 2.7 V ≤ V_{DDIOx} ≤ 3.6 V	-	100[5]	MHz
			C_L = 30 pF, 1.58 V ≤ V_{DDIOx} < 2.7 V	-	33[5]	
			C_L = 30 pF, 1.08 V ≤ V_{DDIOx} < 1.58 V	-	5	
			C_L = 10 pF, 2.7 V ≤ V_{DDIOx} ≤ 3.6 V	-	133[5]	
			C_L = 10 pF, 1.58 V ≤ V_{DDIOx} < 2.7 V	-	40[5]	
			C_L = 10 pF, 1.08 V ≤ V_{DDIOx} < 1.58 V	-	5	
		Maximum frequency FT_v and TT_v I/Os	C_L = 30 pF, 2.7 V ≤ V_{DDIOx} ≤ 3.6 V	-	140[5]	
			C_L = 30 pF, 1.58 V ≤ V_{DDIOx} < 2.7 V	-	40[5]	
			C_L = 30 pF, 1.08 V ≤ V_{DDIOx} < 1.58 V	-	5	
			C_L = 10 pF, 2.7 V ≤ V_{DDIOx} ≤ 3.6 V	-	166[5]	
			C_L = 10 pF, 1.58 V ≤ V_{DDIOx} < 2.7 V	-	50[5]	
			C_L = 10 pF, 1.08 V ≤ V_{DDIOx} < 1.58 V	-	5	
	t_r/t_f	Output rise and fall time All I/Os except FT_c, FT_v, and TT_v	C_L = 30 pF, 2.7 V ≤ V_{DDIOx} ≤ 3.6 V	-	3.3[5]	ns
			C_L = 30 pF, 1.58 V ≤ V_{DDIOx} < 2.7 V	-	6.0[5]	
			C_L = 30 pF, 1.08 V ≤ V_{DDIOx} < 1.58 V	-	13.3	
			C_L = 10 pF, 2.7 V ≤ V_{DDIOx} ≤ 3.6 V	-	2.0[5]	
			C_L = 10 pF, 1.58 V ≤ V_{DDIOx} < 2.7 V	-	4.1[5]	
			C_L = 10 pF, 1.08 V ≤ V_{DDIOx} < 1.58 V	-	9.2	

Table 98. Output AC characteristics, HSLV OFF (all I/Os except FT_c, FT_t in V_{BAT} mode and FT_o I/Os[1])[2][3][4] (continued)

Speed	Symbol	Parameter	Conditions	Min	Max	Unit
11 (cont'd)	t_r/t_f	Output rise and fall time FT_v and TT_v I/Os	C_L = 30 pF, 2.7 V ≤ V_{DDIOx} ≤ 3.6 V	-	2.5[5]	ns
			C_L = 30 pF, 1.58 V ≤ V_{DDIOx} < 2.7 V	-	5.0[5]	
			C_L = 30 pF, 1.08 V ≤ V_{DDIOx} < 1.58 V	-	11	
			C_L = 10 pF, 2.7 V ≤ V_{DDIOx} ≤ 3.6 V	-	1.66[5]	
			C_L = 10 pF, 1.58 V ≤ V_{DDIOx} < 2.7 V	-	3.1[5]	
			C_L = 10 pF, 1.08 V ≤ V_{DDIOx} < 1.58 V	-	7	
Fm+	Fmax	Maximum frequency	C_L = 550 pF, 1.08 V ≤ V_{DDIOx} < 3.6 V	-	1	MHz
	t_f	Output fall time[6]	C_L = 100 pF, 1.58 V ≤ V_{DDIOx} < 3.6 V	-	50	ns
			C_L = 100 pF, 1.08 V ≤ V_{DDIOx} < 1.58 V	-	80	
			C_L = 550 pF, 1.58 V ≤ V_{DDIOx} < 3.6 V	-	100	
			C_L = 550 pF, 1.08 V ≤ V_{DDIOx} < 1.58 V	-	220	

1. FT_t I/O characteristics are degraded only in V_{BAT} mode (refer to *Table 101*).
2. The I/O structure options listed in this table can be a concatenation of options including the option explicitly listed. For instance TT_a refers to any TT I/O with _a option. TT_xx refers to any TT I/O and FT_xx refers to any FT I/O.
3. The I/O speed is configured using the OSPEEDRy[1:0] bits. Refer to the product reference manual for a description of GPIO port configuration register.
4. Specified by design. Not tested in production.
5. Compensation system enabled.
6. The fall time is defined between 70% and 30% of the output waveform accordingly to I^2C specification.

Table 99. Output AC characteristics, HSLV ON (all I/Os except FT_c)[1][2][3][4]

Speed	Symbol	Parameter	Conditions	Min	Max	Unit
00	Fmax	Maximum frequency	C_L = 50 pF, 1.58 V ≤ V_{DDIOx} < 2.7 V	-	10	MHz
			C_L = 50 pF, 1.08 V ≤ V_{DDIOx} < 1.58 V	-	4	
			C_L = 10 pF, 1.58 V ≤ V_{DDIOx} < 2.7 V	-	15	
			C_L = 10 pF, 1.08 V ≤ V_{DDIOx} < 1.58 V	-	4	
	t_r/t_f	Output rise and fall time	C_L = 50 pF, 1.58 V ≤ V_{DDIOx} < 2.7 V	-	18	ns
			C_L = 50 pF, 1.08 V ≤ V_{DDIOx} < 1.58 V	-	32	
			C_L = 10 pF, 1.58 V ≤ V_{DDIOx} < 2.7 V	-	12	
			C_L = 10 pF, 1.08 V ≤ V_{DDIOx} < 1.58 V	-	21	
01	Fmax	Maximum frequency	C_L = 30 pF, 1.58 V ≤ V_{DDIOx} < 2.7 V	-	50	MHz
			C_L = 30 pF, 1.08 V ≤ V_{DDIOx} < 1.58 V	-	10	
			C_L = 10 pF, 1.58 V ≤ V_{DDIOx} < 2.7 V	-	67	
			C_L = 10 pF, 1.08 V ≤ V_{DDIOx} < 1.58 V	-	10	

Table 99. Output AC characteristics, HSLV ON (all I/Os except FT_c)(1)(2)(3)(4) (continued)

Speed	Symbol	Parameter	Conditions	Min	Max	Unit
01 (cont'd)	t_r/t_f	Output rise and fall time	C_L = 30 pF, 1.58 V ≤ V_{DDIOx} < 2.7 V	-	5.3	ns
			C_L = 30 pF, 1.08 V ≤ V_{DDIOx} < 1.58 V	-	10.6	
			C_L = 10 pF, 1.58 V ≤ V_{DDIOx} < 2.7 V	-	3.1	
			C_L = 10 pF, 1.08 V ≤ V_{DDIOx} < 1.58 V	-	5.6	
10	Fmax	Maximum frequency	C_L = 30 pF, 1.58 V ≤ V_{DDIOx} < 2.7 V	-	75(5)	MHz
			C_L = 30 pF, 1.08 V ≤ V_{DDIOx} < 1.58 V	-	15	
			C_L = 10 pF, 1.58 V ≤ V_{DDIOx} < 2.7 V	-	100(5)	
			C_L = 10 pF, 1.08 V ≤ V_{DDIOx} < 1.58 V	-	15	
	t_r/t_f	Output rise and fall time	C_L = 30 pF, 1.58 V ≤ V_{DDIOx} < 2.7 V	-	4.4(5)	ns
			C_L = 30 pF, 1.08 V ≤ V_{DDIOx} < 1.58 V	-	9.6	
			C_L = 10 pF, 1.58 V ≤ V_{DDIOx} < 2.7 V	-	2.2(5)	
			C_L = 10 pF, 1.08 V ≤ V_{DDIOx} < 1.58 V	-	4.7	
11	Fmax	Maximum frequency All I/Os except FT_c, FT_v, and TT_v	C_L = 30 pF, 1.58 V ≤ V_{DDIOx} < 2.7 V	-	75(5)	MHz
			C_L = 30 pF, 1.08 V ≤ V_{DDIOx} < 1.58 V	-	15	
			C_L = 10 pF, 1.58 V ≤ V_{DDIOx} < 2.7 V	-	100(5)	
			C_L = 10 pF, 1.08 V ≤ V_{DDIOx} < 1.58 V	-	15	
		Maximum frequency FT_v and TT_v I/Os	C_L = 30 pF, 1.58 V ≤ V_{DDIOx} < 2.7 V	-	110(5)	
			C_L = 30 pF, 1.08 V ≤ V_{DDIOx} < 1.58 V	-	25	
			C_L = 10 pF, 1.58 V ≤ V_{DDIOx} < 2.7 V	-	150(5)	
			C_L = 10 pF, 1.08 V ≤ V_{DDIOx} < 1.58 V	-	25	
	t_r/t_f	Output rise and fall time All I/Os except FT_c, FT_v, and TT_v	C_L = 30 pF, 1.58 V ≤ V_{DDIOx} < 2.7 V	-	4.4(5)	ns
			C_L = 30 pF, 1.08 V ≤ V_{DDIOx} < 1.58 V	-	9.6	
			C_L = 10 pF, 1.58 V ≤ V_{DDIOx} < 2.7 V	-	2.2(5)	
			C_L = 10 pF, 1.08 V ≤ V_{DDIOx} < 1.58 V	-	4.7	
		Output rise and fall time FT_v and TT_v I/Os	C_L = 30 pF, 1.58 V ≤ V_{DDIOx} < 2.7 V	-	3.0(5)	
			C_L = 30 pF, 1.08 V ≤ V_{DDIOx} < 1.58 V	-	6.6	
			C_L = 10 pF, 1.58 V ≤ V_{DDIOx} < 2.7 V	-	1.6(5)	
			C_L = 10 pF, 1.08 V ≤ V_{DDIOx} < 1.58 V	-	3.4	

1. The I/O structure options listed in this table can be a concatenation of options including the option explicitly listed. For instance TT_a refers to any TT I/O with _a option. TT_xx refers to any TT I/O and FT_xx refers to any FT I/O.
2. The I/O speed is configured using the OSPEEDRy[1:0] bits. Refer to the product reference manual for a description of GPIO port configuration register.
3. Specified by design. Not tested in production.
4. FT_t I/O characteristics are degraded in V_{BAT} mode (refer to *Table 101*).
5. Compensation system enabled.

Table 100. Output AC characteristics for FT_c I/Os(1)(2)

Speed	Symbol	Parameter	Conditions	Min	Max	Unit
00	Fmax	Maximum frequency	All I/Os, C_L = 50 pF, 2.7 V ≤ V_{DDIOx} ≤ 3.6 V	-	10	MHz
			All I/Os, C_L = 50 pF, 1.58 V ≤ V_{DDIOx} < 2.7 V	-	5	
	t_r/t_f	Output rise and fall time	All I/Os, C_L = 50 pF, 2.7 V ≤ V_{DDIOx} ≤ 3.6 V	-	33	ns
			All I/Os, C_L = 50 pF, 1.58 V ≤ V_{DDIOx} < 2.7 V	-	66	
01	Fmax	Maximum frequency	All I/Os, C_L = 50 pF, 2.7 V ≤ V_{DDIOx} ≤ 3.6 V	-	25	MHz
			All I/Os, C_L = 50 pF, 1.58 V ≤ V_{DDIOx} < 2.7 V	-	10	
	t_r/t_f	Output rise and fall time	All I/Os, C_L = 50 pF, 2.7 V ≤ V_{DDIOx} ≤ 3.6 V	-	13	ns
			All I/Os, C_L = 50 pF, 1.58 V ≤ V_{DDIOx} < 2.7 V	-	33	
1x	Fmax	Maximum frequency	All I/Os, C_L = 50 pF, 2.7 V ≤ V_{DDIOx} ≤ 3.6 V	-	40	MHz
			All I/Os, C_L = 50 pF, 1.58 V ≤ V_{DDIOx} < 2.7 V	-	20	
	t_r/t_f	Output rise and fall time	All I/Os, C_L = 50 pF, 2.7 V ≤ V_{DDIOx} ≤ 3.6 V	-	8	ns
			All I/Os, C_L = 50 pF, 1.58 V ≤ V_{DDIOx} < 2.7 V	-	17	

1. Specified by design. Not tested in production.
2. The I/O speed is configured using the OSPEEDRy[1:0] bits. Refer to the product reference manual for a description of GPIO port configuration register.

Table 101. Output AC characteristics for FT_t I/Os in V_{BAT} mode(1)

Symbol	Parameter	Conditions	Min	Max	Unit
Fmax	Maximum frequency	C_L = 50 pF, 2.7 V ≤ V_{SW} ≤ 3.6 V	-	0.5	MHz
		C_L = 50 pF, 1.58 V ≤ V_{SW} < 2.7 V	-	0.25	
t_r/t_f	Output rise and fall time	C_L = 50 pF, 2.7 V ≤ V_{SW} ≤ 3.6 V	-	400	ns
		C_L = 50 pF, 1.58 V ≤ V_{SW} < 2.7 V	-	900	

1. Specified by design. Not tested in production.

Figure 28. Output AC characteristics definition

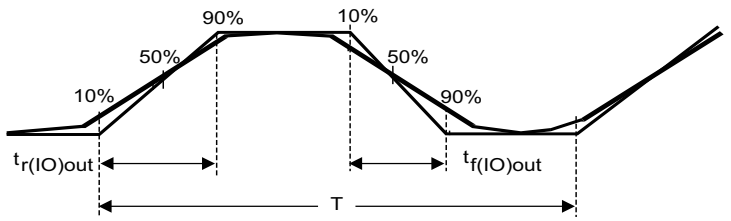

Maximum frequency is achieved with a duty cycle at (45 - 55%) when loaded by the specified capacitance.

MS32132V4

5.3.16 NRST pin characteristics

The NRST pin input driver uses the CMOS technology. It is connected to a permanent pull-up resistor, R_{PU}.

Unless otherwise specified, the parameters given in the table below are derived from tests performed under the ambient temperature and supply voltage conditions summarized in *Table 33*.

Table 102. NRST pin characteristics(1)

Symbol	Parameter	Conditions	Min	Typ	Max	Unit
$V_{IL(NRST)}$	NRST input low-level voltage	-	-	-	$0.3 \times V_{DD}$	V
$V_{IH(NRST)}$	NRST input high-level voltage	-	$0.7 \times V_{DD}$	-	-	
$V_{hys(NRST)}$	NRST Schmitt trigger voltage hysteresis	-	-	200	-	mV
R_{PU}	Weak pull-up equivalent resistor(2)	$V_{IN} = V_{SS}$	30	40	50	kΩ
$t_{F(NRST)}$	NRST input filtered pulse	-	-	-	50	ns
$t_{NF(NRST)}$	NRST input not-filtered pulse	$1.71\ V \le V_{DD} \le 3.6\ V$	330	-	-	
		$1.58\ V \le V_{DD} \le 3.6\ V$	1000	-	-	

1. Specified by design. Not tested in production.
2. The pull-up is designed with a true resistance in series with a switchable PMOS. This PMOS contribution to the series resistance is minimal (~10% order).

Figure 29. Recommended NRST pin protection

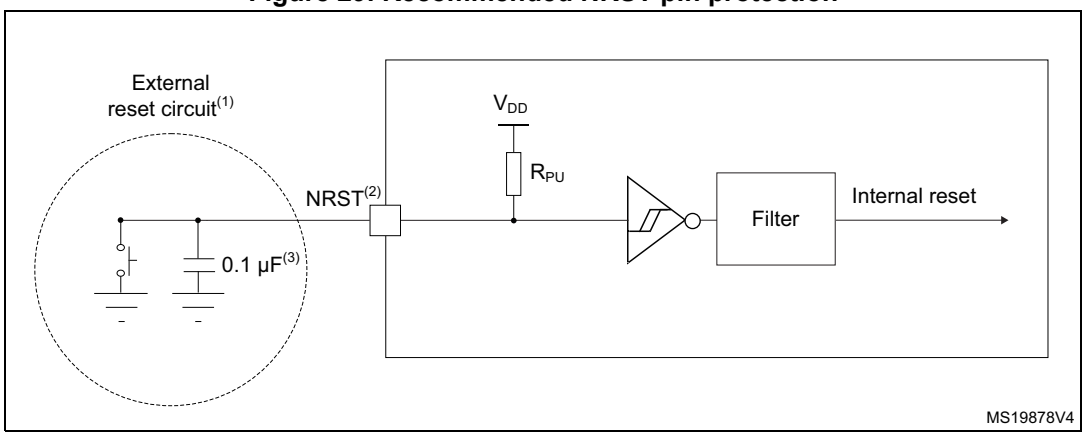

1. The reset network protects the device against parasitic resets.
2. The user must ensure that the level on the NRST pin can go below the $V_{IL(NRST)}$ max level specified in the above table. Otherwise, the reset is not taken into account by the device.
3. The external capacitor on NRST must be placed as close as possible to the device.

5.3.17 Extended interrupt and event controller input (EXTI) characteristics

The pulse on the interrupt input must have a minimal length in order to guarantee that it is detected by the event controller.

Table 103. EXTI input characteristics(1)

Symbol	Parameter	Conditions	Min	Typ	Max	Unit
PLEC	Pulse length to event controller	-	20	-	-	ns

1. Specified by design. Not tested in production.

5.3.18 Analog switches booster

Table 104. Analog switches booster characteristics(1)

Symbol	Parameter	Min	Typ	Max	Unit
V_{DD}	Supply voltage	1.6	1.8	3.6	V
$t_{SU(BOOST)}$	Booster startup time	-	-	50	µs
$I_{DD(BOOST)}$	Booster consumption	-	-	125	µA

1. Specified by design. Not tested in production.

5.3.19 14-bit analog-to-digital converter (ADC12) characteristics

Unless otherwise specified, the parameters given in the table below are values derived from tests performed under ambient temperature, f_{HCLK} frequency, and V_{DDA} supply voltage conditions summarized in *Table 33*.

Note: It is recommended to perform a calibration after each power-up.

Table 105. 14-bit ADC12 characteristics(1)(2)

Symbol	Parameter	Conditions	Min	Typ	Max	Unit
V_{DDA}	Analog power supply for ADC ON	-	1.62	-	3.6	V
V_{REF+}	Positive reference voltage	$V_{DDA} \geq 2$ V	2	-	V_{DDA}	
		$V_{DDA} < 2$ V	V_{DDA}			
V_{REF-}	Negative reference voltage	-	V_{SSA}			
f_{ADC}	ADC clock frequency	$1.62 \text{ V} \leq V_{DDA} \leq 3.6$ V	5(3)	-	55	MHz
	ADC clock ratio	-	45	-	55	%
f_s	Sampling rate	Resolution = 14 bits	0.23	-	2.5	Msps
		Resolution = 12 bits	0.25	-	2.75	
		Resolution = 10 bits	0.28	-	3.05	
		Resolution = 8 bits	0.31	-	3.44	
t_{TRIG}	External trigger period	Resolution = 14 bits	26	-	-	$1/f_{ADC}$
V_{AIN}(4)	Conversion voltage range	-	0	-	V_{REF+}	V

Table 105. 14-bit ADC12 characteristics(1)(2) (continued)

Symbol	Parameter	Conditions	Min	Typ	Max	Unit
V_{CIMV}	Common mode input voltage	-	$V_{REF+}/2$ - 10%	$V_{REF+}/2$	$V_{REF+}/2$ + 10%	V
R_{AIN}(5)	External input impedance	Resolution = 14 bits T_j = 130 °C	-	-	1000	Ω
		Resolution = 12 bits T_j = 130 °C	-	-	1000	
		Resolution = 10 bits T_j = 130 °C	-	-	4700	
		Resolution = 8 bits T_j = 130 °C	-	-	22000	
C_{ADC}	Internal sample-and-hold capacitor	-	-	5	-	pF
$t_{ADCVREG_STUP}$	ADC LDO startup time	-	-	-	17	µs
t_{STAB}	ADC power-up time	LDO already started	(3 × 1/f_{ADC}) + 1 conversion			Cycle
t_{CAL}	Offset and linearity calibration time	-	31849			1/f_{ADC}
t_{OFF_CAL}	Offset calibration time	-	885			
t_{LATR}	Trigger conversion latency for regular and injected channels, without aborting the conversion	PRESC = 0	3			
		PRESC = 1	7			
		PRESC = 2	13			
$t_{LATRINJ}$	Trigger conversion latency Injected channels aborting a regular conversion	PRESC = 0	4			
		PRESC = 1	9			
		PRESC = 2	17			
t_s	Sampling time	-	5	-	814	
t_{CONV}	Total conversion time (including sampling time)	Resolution = N bits	t_s + N + 3			

Table 105. 14-bit ADC12 characteristics(1)(2) (continued)

Symbol	Parameter	Conditions	Min	Typ	Max	Unit
$I_{DDA_D(ADC)}$	ADC consumption on V_{DDA} Differential mode	f_s = 2.5 Msps, resolution = 14 bits	-	970	-	µA
		f_s = 1 Msps, resolution = 14 bits	-	550	-	
		f_s = 10 ksps, resolution = 14 bits	-	130	-	
		f_s = 2.5 Msps, resolution = 12 bits	-	940	-	
		f_s = 2.5 Msps, resolution = 10 bits	-	840	-	
		f_s = 2.5 Msps, resolution = 8bits	-	730	-	
$I_{DDV_D(ADC)}$	ADC consumption on V_{REF+} Differential mode	f_s = 2.5 Msps, resolution = 14 bits	-	140	-	
		f_s = 1 Msps, resolution = 14 bits	-	80	-	
		f_s = 10 ksps, resolution = 14 bits	-	13	-	
		f_s = 2.5 Msps, resolution = 12 bits	-	140	-	
		f_s = 2.5 Msps, resolution = 10 bits	-	140	-	
		f_s = 2.5 Msps, resolution = 8bits	-	120	-	
$I_{DDA_s(ADC)}$	ADC consumption on V_{DDA} Singe-ended mode	f_s = 2.5 Msps, resolution = 14 bits	-	980	-	
		f_s = 1 Msps, resolution = 14 bits	-	550	-	
		f_s = 10 ksps, resolution = 14 bits	-	130	-	
		f_s = 2.5 Msps, resolution = 12 bits	-	900	-	
		f_s = 2.5 Msps, resolution = 10 bits	-	840	-	
		f_s = 2.5 Msps, resolution = 8bits	-	770	-	

Table 105. 14-bit ADC12 characteristics(1)(2) (continued)

Symbol	Parameter	Conditions	Min	Typ	Max	Unit
$I_{DDV_s(ADC)}$	ADC consumption on V_{REF+} Single-ended mode	f_s = 2.5 Msps, resolution = 14 bits	-	160	-	µA
		f_s = 1 Msps, resolution = 14 bits	-	90	-	
		f_s = 10 ksps, resolution = 14 bits	-	15	-	
		f_s = 2.5 Msps, resolution = 12 bits	-	150	-	
		f_s = 2.5 Msps, resolution = 10 bits	-	150	-	
		f_s = 2.5 Msps, resolution = 8bits	-	150	-	

1. Specified by design. Not tested in production.
2. The voltage booster on the ADC switches must be used when V_{DDA} < 2.4 V (embedded I/O switches).
3. Degraded differential linearity error below 10 MHz.
4. Depending on the package, V_{REF+} can be internally connected to V_{DDA} and V_{REF-} can be internally connected to V_{SSA}.
5. The maximum value of R_{ain} is specified to keep leakage induced offset within the specified tolerance. The tolerance is 4 LSBs for 14-bit resolution and 2 LSBs for 12-bit, 10-bit, and 8-bit resolutions.

The maximum value of R_{AIN} can be found in the table below.

Table 106. Maximum R_{AIN} for 14-bit ADC12(1)(2)(3)

Resolution(4)	R_{AIN} max (Ω)(5)	Sampling time [ns]	Sampling cycle at 5 MHz	Sampling cycle at 55 MHz
14 bits	47	142	5	12
	68	145		
	100	170		
12 bits	47	135	5	12
	68	135		
	100	140		
	150	145		
	220	150		
	330	155		
	470	180		

Table 106. Maximum R_{AIN} for 14-bit ADC12(1)(2)(3) (continued)

Resolution(4)	R_{AIN} max (Ω)(5)	Sampling time [ns]	Sampling cycle at 5 MHz	Sampling cycle at 55 MHz
10 bits	47	128	5	12
	68	130		
	100	132		
	150	134		
	220	140		
	330	146		
	470	160		
	680	176		12
	1000	200		
	1500	240		20
	2200	320		
8 bits	47	123	5	12
	68	124		
	100	125		
	150	128		
	220	130		
	330	137		
	470	140		
	680	157		
	1000	178		
	1500	204		
	2200	250		20
	3300	313		
	4700	400		36
	6800	546		
	10000	830		68

1. Specified by design. Not tested in production.
2. BOOSTEN and ANASWVDD configured properly according to V_{DD} and V_{DDA} values.
3. Values without external capacitor.
4. The tolerance is 2 LSBs for 14 bits and 1 LSB for other resolutions.
5. The maximum value of R_{AIN} is obtained in a worst-case scenario: channel conversion in scan mode with channel i connected to V_{REF+} and channel i + 1 connected to V_{REF-}.

Table 107. 14-bit ADC12 accuracy(1)(2)

Symbol	Parameter	Conditions(3)		Min	Typ	Max	Unit
ET	Total unadjusted error	Single ended		-	± 6	± 12	LSB
		Differential		-	±3	±6	
EO	Offset error	Single ended		-	±6	±12(4)	
		Differential		-	±2	±6(4)	
EG	Gain error	Single ended		-	±5	±10	
		Differential		-	±2.5	±5	
ED	Differential linearity error	Single ended	f_{ADC} ≥ 10 MHz	-	-0.9/+1.5	-0.9/+2.5	
		Differential		-			
		Single ended	f_{ADC} < 10 MHz	-	-0.9/+1.5	-1/+3	
		Differential		-			
EL	Integral linearity error	Single ended		-	±3	±7	
		Differential		-	±2	±5	
ENOB	Effective number of bits	Single ended		11	12	-	bits
		Differential		11.8	12.8	-	
SINAD	Signal-to-noise and distortion ratio	Single ended		68	74	-	dB
		Differential		73	78	-	
SNR	Signal-to-noise ratio	Single ended		68	74	-	
		Differential		73	78	-	
THD	Total harmonic distortion	Single ended		-	-84	-80	
		Differential		-	-95	-89	

1. Evaluated by characterization for BGA packages. Not tested in production. The values for LQFP packages may differ.
2. ADC DC accuracy values are measured after the internal calibration.
3. The I/O analog switch voltage booster is enable when V_{DDA} < 2.4 V (BOOSTEN = 1 in SYSCFG_CFGR1 when V_{DDA} < 2.4 V). The booster is disabled when V_{DDA} ≥ 2.4 V. Resolution = 14 bits, no oversampling.
4. This parameter may degrade in case of digital activity on adjacent I/Os.

Figure 30. ADC accuracy characteristics

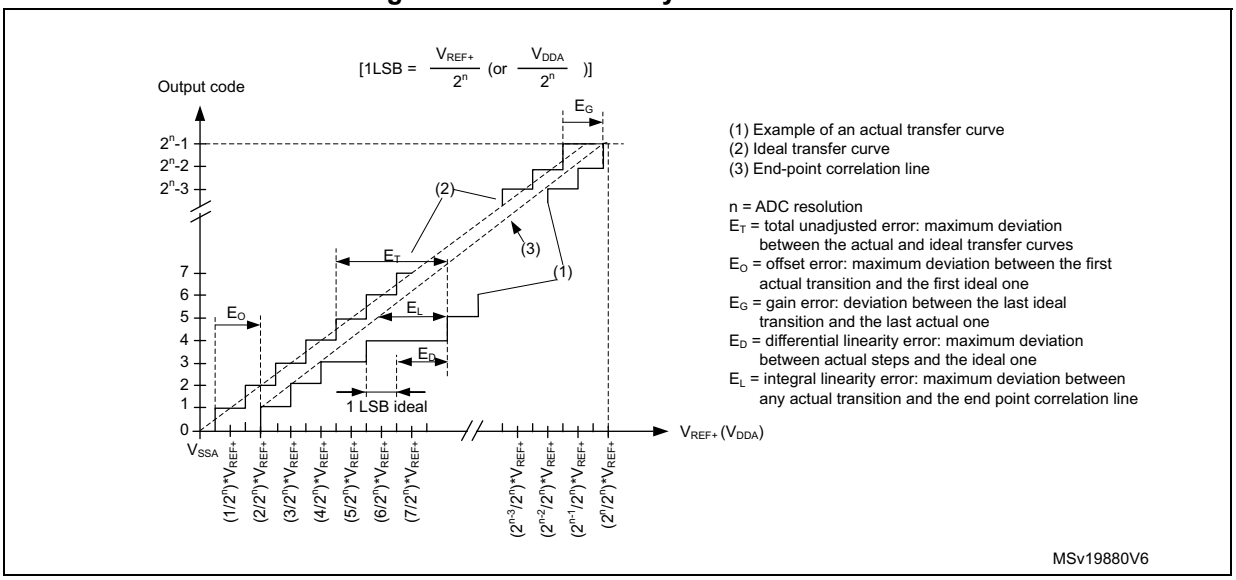

Figure 31. Typical connection diagram when using the ADC with FT/TT pins featuring analog switch function

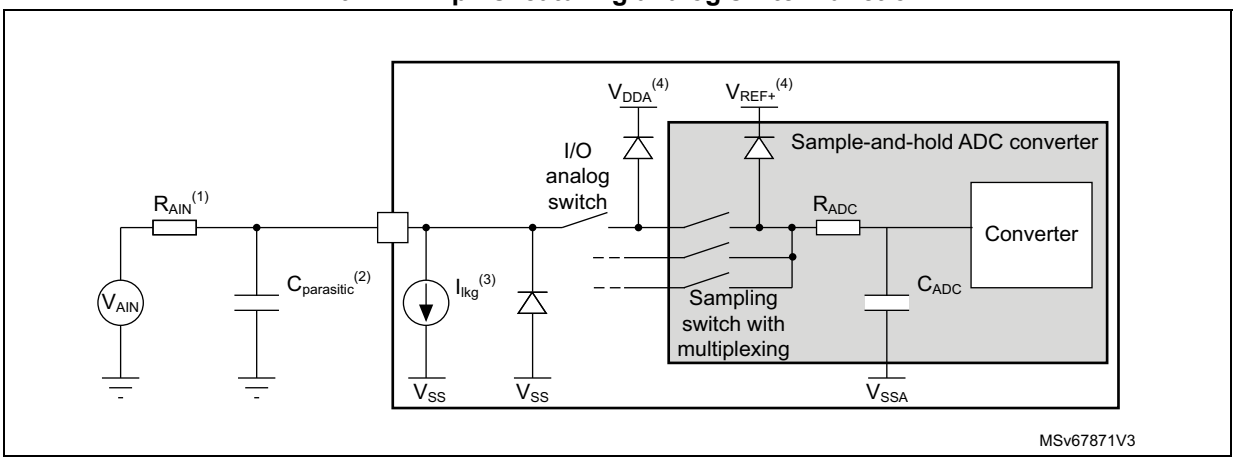

1. Refer to the ADCx characteristic table for the values of R_{AIN} and C_{ADC}.
2. $C_{parasitic}$ represents the capacitance of the PCB (dependent on soldering and PCB layout quality) plus the pad capacitance (refer to *Table 95: I/O static characteristics* for the value of the pad capacitance). A high $C_{parasitic}$ value downgrades the conversion accuracy. To remedy this, f_{ADC} must be reduced.
3. Refer to *Table 95: I/O static characteristics* for the values of I_{lkg}.
4. Refer to *Section 5.1.6: Power supply scheme*.

General PCB design guidelines

The power-supply decoupling must be performed as shown in the corresponding power-supply scheme. The 100 nF capacitor must be ceramic (good quality) and must be placed as close as possible to the chip.

5.3.20 12-bit analog-to-digital converter (ADC4) characteristics

Unless otherwise specified, the parameters given in the table below are values derived from tests performed under ambient temperature, f_{HCLK} frequency, and V_{DDA} supply voltage conditions summarized in *Table 33*.

Note: It is recommended to perform a calibration after each power-up.

Table 108. 12-bit ADC4 characteristics(1)(2)

Symbol	Parameter	Conditions	Min	Typ	Max	Unit
V_{DDA}	Analog power supply for ADC ON	-	1.62	-	3.6	V
V_{REF+}	Positive reference voltage	-	1	-	V_{DDA}	
V_{REF-}	Negative reference voltage	-	V_{SSA}			
f_{ADC}	ADC clock frequency	1.62 V ≤ V_{DDA} ≤ 3.6 V	0.14	-	55	MHz
	ADC clock duty cycle	-	45	-	55	%
f_s	Sampling rate	Resolution = 12 bits	0.01	-	2.75	Msps
		Resolution = 10 bits	0.012	-	3.05	
		Resolution = 8 bits	0.014	-	3.43	
		Resolution = 6bits	0.0175	-	3.92	
t_{TRIG}	External trigger period	Resolution = 12 bits	16	-	-	$1/f_{ADC}$
V_{AIN}(3)	Conversion voltage range	-	0	-	V_{REF+}	V
R_{AIN}(4)	External input impedance T_j = 130 °C	Resolution = 12 bits	-	-	2.2	kΩ
		Resolution = 10 bits	-	-	6.8	
		Resolution = 8 bits	-	-	33.0	
		Resolution = 6 bits	-	-	47.0	
C_{ADC}	Internal sample and hold capacitor	-	-	5	-	pF
$t_{ADCVREG_STUP}$	ADC LDO startup ready flag time	-	-	-	25	µs
t_{STAB}	ADC power-up time	LDO already started	(3 × $1/f_{ADC}$) + 1 conversion			Cycle
t_{OFF_CAL}	Offset calibration time	-	123			$1/f_{ADC}$
t_{LATR}	Trigger conversion latency	WAIT = 0, AUTOFF = 0, DPD = 0, f_{ADC} = HCLK	4			
		WAIT = 0, AUTOFF = 0, DPD = 0, f_{ADC} = HCLK/2	4			
		WAIT = 0, AUTOFF = 0, DPD = 0, f_{ADC} = HCLK/4	3.75			
t_s	Sampling time	-	1.5	-	814.5	

Table 108. 12-bit ADC4 characteristics(1)(2) (continued)

Symbol	Parameter	Conditions	Min	Typ	Max	Unit
t_{CONV}	Total conversion time (including sampling time)	Resolution = N bits, VREFPROTEN = 0	t_s + N + 0.5			$1/f_{ADC}$
		Resolution = N bits, VREFPROTEN = 1 VREFSECSMP = 0	t_s + N + 0.5	-	t_s + N + 1.5	
		Resolution = N bits, VREFPROTEN = 1 VREFSECSMP = 1	t_s + N + 0.5	-	t_s + N + 2.5	
$I_{DDA(ADC)}$	ADC consumption on V_{DDA}	f_s = 2.5 Msps	-	360	-	µA
		f_s = 1 Msps	-	180	-	
		f_s = 10 ksps	-	10	-	
		AUTOFF = 1, DPD = 0, no conversion	-	9	-	
		AUTOFF = 1, DPD = 1, no conversion	-	0.1	-	
$I_{DDV(ADC)}$	ADC consumption on V_{REF+}	f_s = 2.5 Msps	-	18	-	
		f_s = 1 Msps	-	10.2	-	
		f_s = 10 ksps	-	0.12	-	
		AUTOFF = 1, DPD = 0, no conversion	-	0.01	-	
		AUTOFF = 1, DPD = 1, no conversion	-	0.01	-	

1. Specified by design. Not tested in production.
2. The voltage booster on the ADC switches must be used when V_{DDA} < 2.4 V (embedded I/O switches).
3. Depending on the package, V_{REF+} can be internally connected to V_{DDA} and V_{REF-} can be internally connected to V_{SSA}.
4. The maximum value of R_{ain} is specified to keep leakage induced offset within the specified tolerance. The tolerance is 2 LSBs.

The maximum value of R_{AIN} can be found in the table below.

Table 109. Maximum R_{AIN} for 12-bit ADC4(1)(2)(3)

<table>
<tr><th>Resolution(4)</th><th>R_{AIN} max (Ω)(5)</th><th>Sampling time [ns]</th><th>Sampling cycle at 35 MHz</th><th>Sampling cycle at 55 MHz</th></tr>
<tr><td rowspan="15">12 bits</td><td>47</td><td>276</td><td rowspan="4">12.5</td><td rowspan="4">19.5</td></tr>
<tr><td>68</td><td>288</td></tr>
<tr><td>100</td><td>306</td></tr>
<tr><td>150</td><td>336</td></tr>
<tr><td>220</td><td>377</td><td rowspan="3">19.5</td><td rowspan="3">39.5</td></tr>
<tr><td>330</td><td>442</td></tr>
<tr><td>470</td><td>526</td></tr>
<tr><td>680</td><td>650</td><td rowspan="3">39.5</td><td rowspan="2">39.5</td></tr>
<tr><td>1000</td><td>840</td><td rowspan="2">79.5</td></tr>
<tr><td>1500</td><td>1134</td></tr>
<tr><td>2200</td><td>1643</td><td>79.5</td><td rowspan="7">814.5</td></tr>
<tr><td>3300</td><td>2395</td><td rowspan="7">814.5</td></tr>
<tr><td>4700</td><td>3342</td></tr>
<tr><td>6800</td><td>4754</td></tr>
<tr><td>10000</td><td>6840</td></tr>
<tr><td>15000</td><td>9967</td></tr>
<tr><td>22000</td><td>14068</td></tr>
<tr><td>33000</td><td>19933</td><td>N/A</td></tr>
<tr><td rowspan="14">10 bits</td><td>47</td><td>86</td><td rowspan="3">3.5</td><td rowspan="5">7.5</td></tr>
<tr><td>68</td><td>90</td></tr>
<tr><td>100</td><td>95</td></tr>
<tr><td>150</td><td>108</td><td rowspan="5">7.5</td></tr>
<tr><td>220</td><td>116</td></tr>
<tr><td>330</td><td>136</td></tr>
<tr><td>470</td><td>161</td><td rowspan="2">12.5</td></tr>
<tr><td>680</td><td>212</td></tr>
<tr><td>1000</td><td>276</td><td>12.5</td><td>19.5</td></tr>
<tr><td>1500</td><td>376</td><td rowspan="2">19.5</td><td>39.5</td></tr>
<tr><td>2200</td><td>516</td><td rowspan="3">79.5</td></tr>
<tr><td>3300</td><td>735</td><td rowspan="2">39.5</td></tr>
<tr><td>4700</td><td>1012</td></tr>
<tr><td>6800</td><td>1423</td><td>79.5</td><td>814.5</td></tr>
</table>

Table 109. Maximum R_{AIN} for 12-bit ADC4(1)(2)(3) (continued)

Resolution(4)	R_{AIN} max (Ω)(5)	Sampling time [ns]	Sampling cycle at 35 MHz	Sampling cycle at 55 MHz
10 bits (cont'd)	10000	2040	814.5	814.5
	15000	2978		
	22000	4356		
	33000	6443		
	47000	8925		
8 bits	47	45	3.5	3.5
	68	46		
	100	48		
	150	53		
	220	59		
	330	69		7.5
	470	81		
	680	101	7.5	
	1000	130		
	1500	177		12.5
	2200	242	12.5	19.5
	3300	345		
	4700	475	19.5	39.5
	6800	670	39.5	
	10000	963		79.5
	15000	1417	79.5	
	22000	2040		814.5
	33000	2995	814.5	
	47000	4158		
6 bits	47	32	1.5	3.5
	68	32		
	100	33		
	150	35		
	220	37		
	330	41		
	470	49	3.5	
	680	61		
	1000	79		7.5
	1500	106	7.5	

Table 109. Maximum R_{AIN} for 12-bit ADC4(1)(2)(3) (continued)

Resolution(4)	R_{AIN} max (Ω)(5)	Sampling time [ns]	Sampling cycle at 35 MHz	Sampling cycle at 55 MHz
6 bits (cont'd)	2200	146	7.5	12.5
	3300	207		
	4700	286	12.5	19.5
	6800	404	19.5	39.5
	10000	584	39.5	
	22000	1250	79.5	79.5
	33000	1853		814.5
	47000	2607	814.5	

1. Specified by design. Not tested in production.
2. BOOSTEN and ANASWVDD configured properly according to V_{DD} and V_{DDA} values.
3. Values without external capacitor.
4. The tolerance is 2 LSBs for 14 bits and 1 LSB for other resolutions.
5. The maximum value of R_{AIN} is obtained in a worst-case scenario: channel conversion in scan mode with channel i connected to V_{REF+} and channel i + 1 connected to V_{REF-}.

Table 110. 12-bit ADC4 accuracy(1)(2) (3)

Symbol	Parameter	Conditions	Min	Typ	Max	Unit
ET	Total unadjusted error	-	-	±3	±7.5	LSB
EO	Offset error	-	-	±2	±5.5	
EG	Gain error	-	-	±2	±6.5	
ED	Differential linearity error	-	-	-0.9/+1	-0.9/+1.5	
EL	Integral linearity error	-	-	±2	±3.5	
ENOB	Effective number of bits	-	9.9	10.9	-	bits
SINAD	Signal-to-noise and distortion ratio	-	61.4	67.4	-	dB
SNR	Signal-to-noise ratio	-	61.6	67.5	-	
THD	Total harmonic distortion	-	-	-74	-70	

1. Evaluated by characterization for BGA packages. Not tested in production. The values for LQFP packages may differ.
2. ADC DC accuracy values are measured after the internal calibration.
3. The I/O analog switch voltage booster is enabled when V_{DDA} < 2.4 V (BOOSTEN = 1 in SYSCFG_CFGR1 when V_{DDA} < 2.4 V). This switch is disabled when V_{DDA} ≥ 2.4 V. Resolution = 12 bits, no oversampling.

See *Figure 30: ADC accuracy characteristics*, *Figure 31: Typical connection diagram when using the ADC with FT/TT pins featuring analog switch function*, and *General PCB design guidelines*.

5.3.21 Temperature sensor characteristics

Table 111. Temperature sensor characteristics

Symbol	Parameter	Min	Typ	Max	Unit
T_L(1)	V_{SENSE} linearity with temperature	-	-	1.3	°C
Avg_Slope(1)	Average slope	2	2.5	3.0	mV/°C
V_{30}(2)	Voltage at 30°C (±5 °C)	700	752	800	mV
$\Delta(V_{continuous} - V_{sampling})$(3)	Difference of voltage between continuous and sampling modes(4)	-	-	-10/+4	
$t_{START(TS_BUF)}$(3)	Sensor buffer startup time	-	1	10	µs
t_{S_temp}(3)	ADC sampling time when reading the temperature	13	-	-	
$I_{DD(TS)}$(3)	Temperature sensor consumption from V_{DD}, when selected by ADC	-	14	20	µA

1. Evaluated by characterization. Not tested in production.
2. Measured at $V_{REF+} = V_{DDA}$ = 3.0 V ±10 mV. The V_{30} A/D conversion result is stored in the TS_CAL1 byte. Refer to *Table 16: Temperature sensor calibration values*.
3. Specified by design. Not tested in production.
4. The temperature sensor is in continuous mode when the regulator is in range 1, 2 or 3. The temperature sensor is in sampling mode when the regulator is in range 4, or when the device is in Stop 1 or Stop 2 mode.

5.3.22 V_{CORE} monitoring characteristics

Table 112. V_{CORE} monitoring characteristics(1)

Symbol	Parameter	Min	Typ	Max	Unit
t_{S_VCORE}	ADC sampling time when reading the V_{CORE} voltage	1	-	-	µs

1. Specified by design. Not tested in production.

5.3.23 V_{BAT} monitoring characteristics

Table 113. V_{BAT} monitoring characteristics(1)

Symbol	Parameter	Min	Typ	Max	Unit
R	Resistor bridge for V_{BAT}	-	4 × 25.6	-	kΩ
Q	Ratio on V_{BAT} measurement	-	4	-	-
Er(2)	Error on Q	-5	-	5	%
t_{S_VBAT}(2)	ADC sampling time when reading the VBAT	5	-	-	µs

1. 1.58 V ≤ V_{BAT} ≤ 3.6 V
2. Specified by design. Not tested in production.

Table 114. V_{BAT} charging characteristics

Symbol	Parameter	Conditions	Min	Typ	Max	Unit
R_{BC}	Battery charging resistor	VBRS = 0	-	5	-	kΩ
		VBRS = 1	-	1.5	-	

5.3.24 Digital-to-analog converter characteristics

Table 115. DAC characteristics(1)

Symbol	Parameter	Conditions		Min	Typ	Max	Unit
V_{DDA}	Analog supply voltage for DAC ON	-		1.6	-	3.6	V
V_{REF+}	Positive reference voltage	-		1.6	-	V_{DDA}	
V_{REF-}	Negative reference voltage	-		-	V_{SSA}	-	
R_L	Resistive load	DAC output buffer ON	connected to V_{SSA}	5	-	-	kΩ
			connected to V_{DDA}	25	-	-	
R_O	Output impedance	DAC output buffer OFF		10	13	16	
R_{BON}	Output impedance sample and hold mode, output buffer ON	V_{DDA} = 2.7 V		-	-	1.5	
		V_{DDA} = 2.0 V		-	-	2.5	
R_{BOFF}	Output impedance sample and hold mode, output buffer OFF	V_{DDA} = 2.7 V		-	-	16.5	
		V_{DDA} = 2.0 V		-	-	17.5	
C_L	Capacitive load	DAC output buffer OFF		-	-	50	pF
C_{SH}		Sample and hold mode		-	0.1	1	µF
V_{DAC_OUT}	Voltage on DAC_OUT output	DAC output buffer ON		0.2	-	V_{DDA} - 0.2	V
		DAC output buffer OFF		0	-	V_{REF+}	
$t_{SETTLING}$	Settling time (full scale: for a 12-bit code transition between the lowest and the highest input codes when DAC_OUT reaches the final value of ±0.5 LSB, ±1 LSB, ±2 LSB, ±4 LSB, or ±8 LSB)	Normal mode DAC output buffer ON C_L ≤ 50 pF, R_L ≥ 5 kΩ	±0.5 LSB	-	2.05	3.05	µs
			±1 LSB	-	1.90	3	
			±2 LSB	-	1.85	2.85	
			±4 LSB	-	1.80	2.8	
			±8 LSB	-	1.75	2.65	
		Normal mode DAC output buffer OFF, ±1 LSB, C_L = 10 pF		-	1.7	3	
t_{WAKEUP} (2)	Wake-up time from off state (setting the ENx bit in the DAC control register) until the final value ±1 LSB	Normal mode DAC output buffer ON, C_L ≤ 50 pF, R_L = 5 kΩ		-	4.2	7.5	
		Normal mode DAC output buffer OFF, C_L ≤ 10 pF		-	2	5	
PSRR	DC V_{DDA} supply rejection ratio	Normal mode DAC output buffer ON, C_L ≤ 50 pF, R_L = 5 kΩ		35	-80	-28	dB

Table 115. DAC characteristics[1] (continued)

Symbol	Parameter	Conditions		Min	Typ	Max	Unit
t_{SAMP}	Sampling time in sample and hold mode, C_{SH} = 100 nF (code transition between the lowest input code and the highest input code when DACOUT reaches the final value ±1 LSB)	DAC_OUT pin connected	DAC output buffer ON, C_{SH} = 100 nF	-	0.7	1.9	ms
			DAC output buffer OFF, C_{SH} = 100 nF	-	10.5	15	
		DAC_OUT pin not connected (internal connection only)	DAC output buffer OFF	-	2	8	µs
I_{leak}	Output leakage current	-		-	-	(3)	nA
CI_{int}	Internal sample and hold capacitor	-		7	9.2	11	pF
t_{TRIM}	Middle code offset trim time	DAC output buffer ON		50	-	-	µs
V_{offset}	Middle code offset for 1 trim code step	V_{REF+} = 3.6 V		-	1520	-	µV
		V_{REF+} = 1.6 V		-	680	-	
$I_{DDA(DAC)}$	DAC consumption from V_{DDA}	DAC output buffer ON	No load, middle code (0x800)	-	330	510	µA
			No load, worst code (0xF1C)	-	470	680	
		DAC output buffer OFF	No load, middle/worst code (0x800)	-	-	0.3	
		Sample and hold mode, C_{SH} = 100 nF		-	$330 \times T_{ON}/(T_{ON} + T_{OFF})$ (4)	$680 \times T_{ON}/(T_{ON} + T_{OFF})$ (4)	
$I_{DDV(DAC)}$	DAC consumption from V_{REF+}	DAC output buffer ON	No load, middle code (0x800)	-	170	240	
			No load, worst code (0x0E4)	-	300	400	
		DAC output buffer OFF	No load, middle/worst code (0x800)	-	145	180	
		Sample and hold mode, buffer ON, C_{SH} = 100 nF (worst code)		-	$170 \times T_{ON}/(T_{ON} + T_{OFF})$ (4)	$400 \times T_{ON}/(T_{ON} + T_{OFF})$ (4)	
		Sample and hold mode, buffer OFF, C_{SH} = 100 nF (worst code)		-	$145 \times T_{ON}/(T_{ON} + T_{OFF})$ (4)	$180 \times T_{ON}/(T_{ON} + T_{OFF})$ (4)	

1. Specified by design. Not tested in production.

2. In buffered mode, the output can overshoot above the final value for low input code (starting from the minimum value).
3. Refer to *Table 95: I/O static characteristics*.
4. T_{ON} is the refresh phase duration. T_{OFF} is the hold phase duration (see the product reference manual for more details).

Figure 32. 12-bit buffered/non-buffered DAC

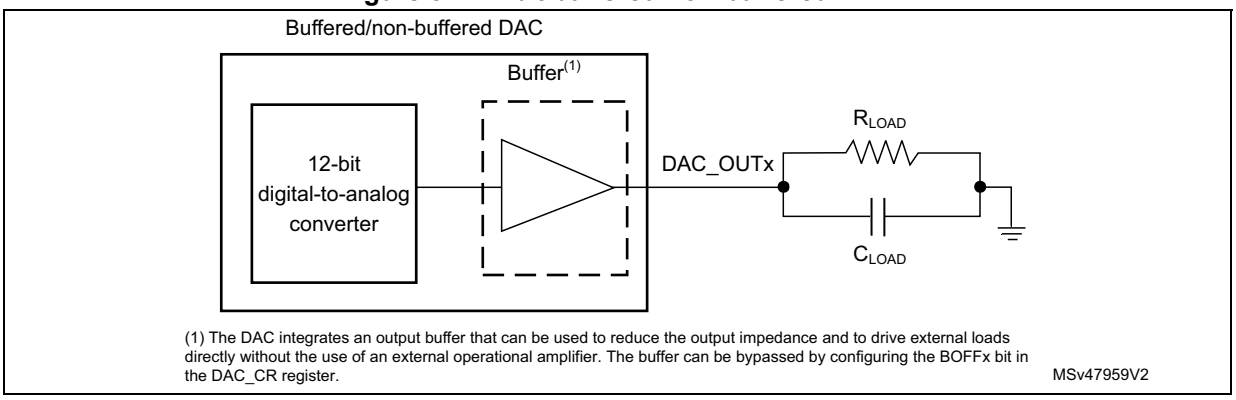

Table 116. DAC accuracy(1)

Symbol	Parameter	Conditions		Min	Typ	Max	Unit
DNL	Differential non-linearity(2)	DAC output buffer ON		-	-	±2	LSB
		DAC output buffer OFF		-	-	±2	
-	Monotonicity	10 bits		guaranteed			-
INL	Integral non-linearity(3)	DAC output buffer ON, $C_L \leq 50$ pF, $R_L \geq 5$ kΩ		-	-	±4	LSB
		DAC output buffer OFF, $C_L \leq 50$ pF, no R_L		-	-	±4	
Offset	Offset error at code 0x800(3)	DAC output buffer OFF, $C_L \leq 50$ pF, no R_L		-	-	±8	
Offset1	Offset error at code 0x001(4)	DAC output buffer OFF, $C_L \leq 50$ pF, no R_L		-	-	±5	
OffsetCal	Offset error at code 0x800(3) after calibration	DAC output buffer ON, $C_L \leq 50$ pF, $R_L \geq 5$ kΩ	V_{REF+} = 3.6 V	-	-	±5	
			V_{REF+} = 1.6 V	-	-	±5	
Gain	Gain error(5)	DAC output buffer ON, $C_L \leq 50$ pF, $R_L \geq 5$ kΩ		-	-	±0.5	%
		DAC output buffer OFF, $C_L \leq 50$ pF, no R_L		-	-	±0.5	
TUE	Total unadjusted error	DAC output buffer OFF, $C_L \leq 50$ pF, no R_L		-	-	±10	LSB
		DAC output buffer ON, $C_L \leq 50$ pF, $R_L \geq 5$ kΩ, after calibration		-	-	±14	

Table 116. DAC accuracy(1) (continued)

Symbol	Parameter	Conditions	Min	Typ	Max	Unit
SNR	Signal-to-noise ratio(6)	DAC output buffer ON, C_L ≤ 50 pF, R_L ≥ 5 kΩ, 1 kHz, BW = 500 kHz	-	70.6	-	dB
		DAC output buffer OFF, C_L ≤ 50 pF, no R_L, 1 kHz, BW = 500 kHz	-	72	-	
THD	Total harmonic distortion(6)	DAC output buffer ON, C_L ≤ 50 pF, R_L ≥ 5 kΩ, 1 kHz	-	-79	-	
		DAC output buffer OFF, C_L ≤ 50 pF, no R_L, 1 kHz	-	-81	-	
SINAD	Signal-to-noise and distortion ratio(6)	DAC output buffer ON, C_L ≤ 50 pF, R_L ≥ 5 kΩ, 1 kHz	-	70.1	-	
		DAC output buffer OFF, C_L ≤ 50 pF, no R_L, 1 kHz	-	71.5	-	
ENOB	Effective number of bits	DAC output buffer ON, C_L ≤ 50 pF, R_L ≥ 5 kΩ, 1 kHz	-	11.3	-	bits
		DAC output buffer OFF, C_L ≤ 50 pF, no R_L, 1 kHz	-	11.6	-	

1. Specified by design. Not tested in production.
2. Difference between two consecutive codes minus 1 LSB.
3. Difference between the value measured at code i and the value measured at code i on a line drawn between code 0 and last code 4095.
4. Difference between the value measured at code (0x001) and the ideal value.
5. Difference between the ideal transfer-function slope and the measured slope computed from code 0x000 and 0xFFF when the buffer is OFF, and from code giving 0.2 V and (VREF+ - 0.2 V) when the buffer is ON.
6. Signal is -0.5 dBFS with Fsampling = 1 MHz.

5.3.25 Voltage reference buffer characteristics

Table 117. VREFBUF characteristics(1)

Symbol	Parameter	Conditions		Min	Typ	Max	Unit
V_{DDA}	Analog supply voltage	Normal mode	VRS = 000	1.8	-	3.6	V
			VRS = 001	2.1	-		
			VRS = 010	2.4	-		
			VRS = 011	2.8	-		
		Degraded mode(2)	VRS = 000	1.62	-	1.8	
			VRS = 001		-	2.1	
			VRS = 010		-	2.4	
			VRS = 011		-	2.8	
V_{REFBUF_OUT} (3)	Voltage reference buffer output	Normal mode at V_{DDA} = 3 V, T_J = 30 °C, I_{load} = 10 µA	VRS = 000	1.496	1.5	1.504	
			VRS = 001	1.795	1.8	1.805	
			VRS = 010	2.042	2.048	2.054	
			VRS = 011	2.493	2.5	2.507	

Table 117. VREFBUF characteristics(1) (continued)

Symbol	Parameter	Conditions		Min	Typ	Max	Unit
V_{REFBUF_OUT} (3) (cont'd)	Voltage reference buffer output	Degraded mode(2)	VRS = 000	Min (V_{DDA} - 0.15 ;1.496)	-	1.504	V
			VRS = 001	Min (V_{DDA} - 0.15 ;1.795)	-	1.805	
			VRS = 010	Min (V_{DDA} - 0.15 ;2.042)	-	2.054	
			VRS = 011	Min (V_{DDA} - 0.15 ;2.493)	-	2.507	
TRIM	Trim step	-		0.1	0.175	0.25	%
C_L	Load capacitor(4)	-		0.5	1.10	1.50	µF
esr	C_L equivalent serial resistor	-		-	-	2	Ω
I_{load}	Static load current	-		-	-	4	mA
R_{PD}	Pull-down resistance	-		-	-	400	Ω
I_{line_reg}	Line regulation	$V_{DDAmin} \le V_{DDA} \le 3.6$ V, Normal mode, 500 µA ≤ I_{load} ≤ 4 mA		±0.016	±0.033	±0.053	%
I_{load_reg}	Load regulation(5)	Normal mode, 500 µA ≤ I_{load} ≤ 4 mA		-	50	400	ppm/ mA
T_{Coeff}	Temperature coefficient	–40 °C < T_J < +130 °C		-	-	$T_{coeff_vrefint}$ + 50	ppm/ °C
PSRR	Power supply rejection	DC		-	65	-	dB
		100 kHz		-	30	-	
t_{START}	Startup time	C_L = 0.5 µF		-	110	200	µs
		C_L = 1.1 µF		-	240	350	
		C_L = 1.5 µF		-	320	500	
I_{INRUSH}	Control of DC current drive on V_{REFBUF_OUT} during startup phase (6)	-		-	8	11	mA
I_{DDA} (VREFBUF)	VREFBUF consumption from V_{DDA}	I_{load} = 0 µA		-	14	18	µA
		I_{load} = 500 µA		-	16	20	
		I_{load} = 4 mA		-	42	50	

1. Specified by design and not tested in production, unless otherwise specified.
2. In degraded mode, the voltage reference buffer can not accurately maintain the output voltage (V_{DDA} - drop voltage).
3. Evaluated by characterization. Not tested in production.
4. The capacitive load must include a 100 nF capacitor in order to cut off the high-frequency noise.
5. The load regulation value only takes into account the die and package resistance. The parasitic resistance on PCB degrades this value.
6. To correctly control the VREFBUF inrush current during startup phase and scaling change, the V_{DDA} voltage must be in the range of [1.8 V-3.6 V], [2.1 V-3.6 V], [2.4 V-3.6 V] and [2.8 V-3.6 V] for VRS = 000, 001, 010 and 011 respectively.

Figure 33. V_{REFBUF_OUT} versus temperature (VRS = 000)

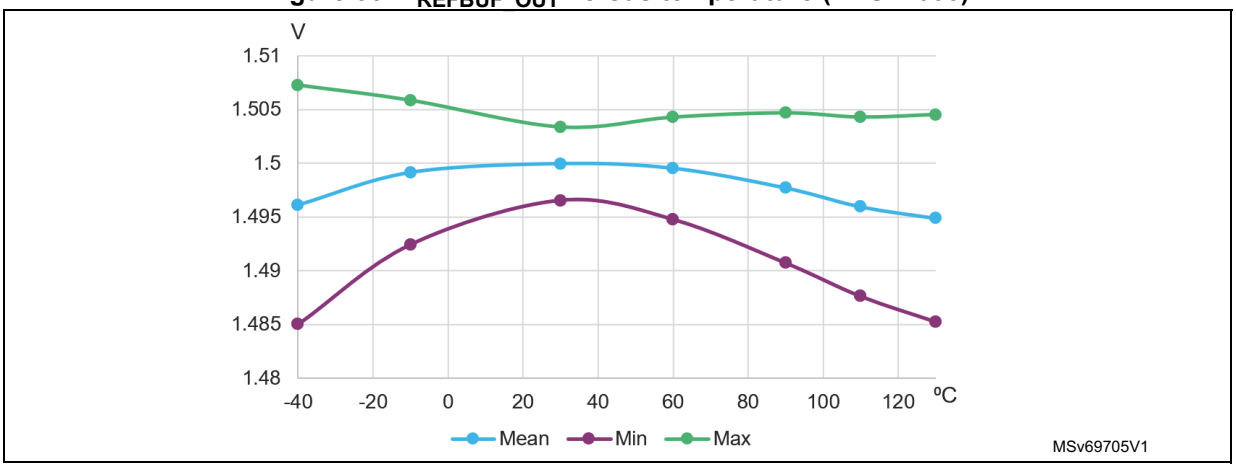

Figure 34. V_{REFBUF_OUT} versus temperature (VRS = 001)

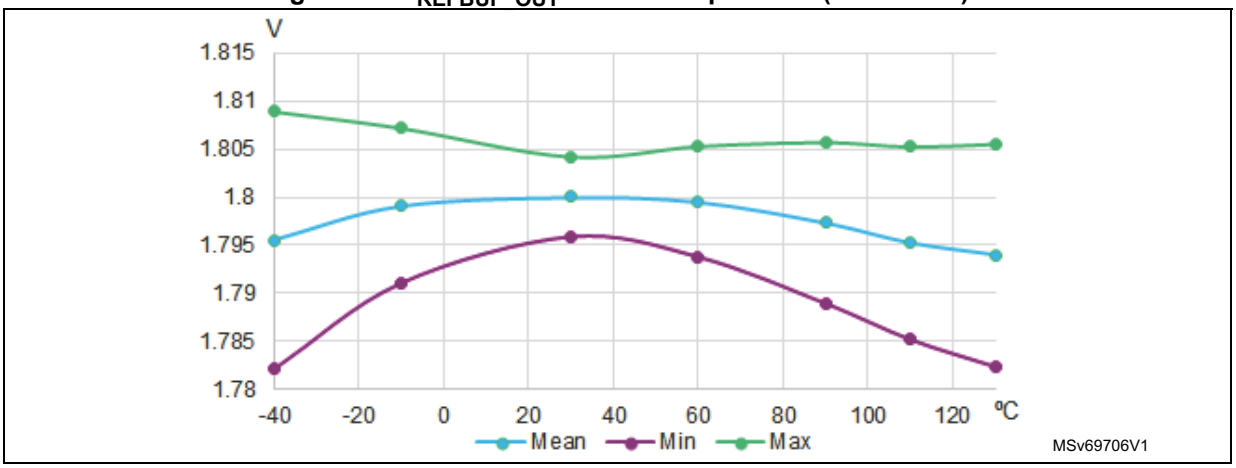

Figure 35. V_{REFBUF_OUT} versus temperature (VRS = 010)

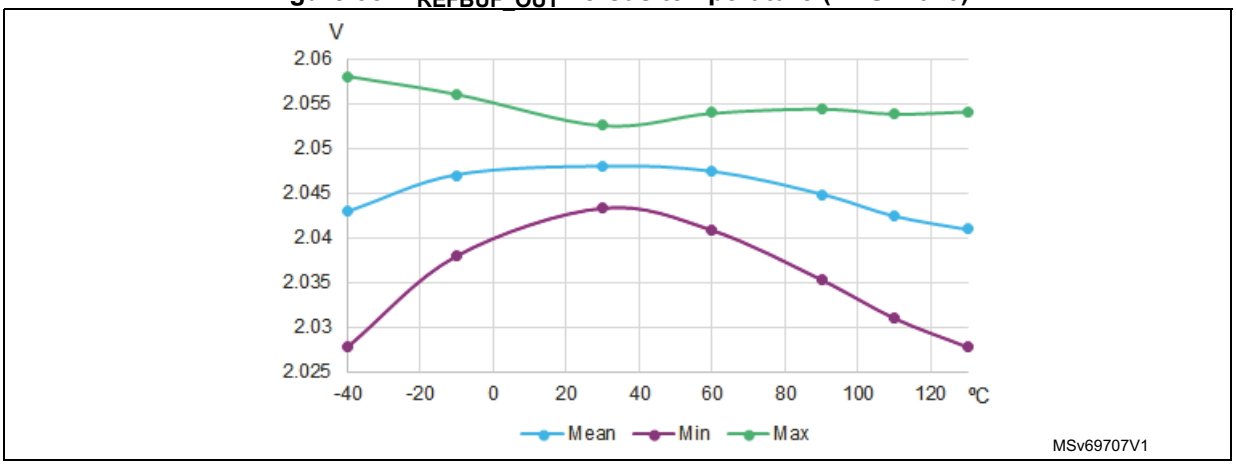

Figure 36. V_{REFBUF_OUT} versus temperature (VRS = 011)

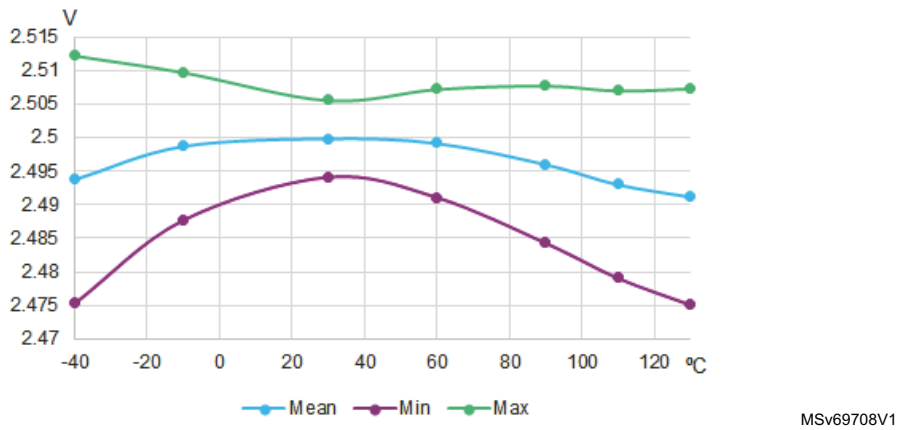

5.3.26 Comparator characteristics

Table 118. COMP characteristics(1)(2)

Symbol	Parameter	Conditions	Min	Typ	Max	Unit
V_{DDA}	Analog supply voltage for COMP ON	-	1.58	-	3.6	V
V_{IN}	Comparator input voltage range	-	0	-	V_{DDA}	
V_{REFINT}(3)	Scaler input voltage	-	(3)			
V_{SC}	Scaler offset voltage	-	-	±5	±10	mV
$I_{DDA(SCALER)}$	Scaler static consumption from V_{DDA}	Scaler bridge disabled(4)	-	0.20	0.25	µA
		Scaler bridge enabled(5)	-	0.7	1	
t_{START_SCALER}	Scaler startup time	-	-	130	220	µs
t_{START}	Comparator startup time to reach propagation delay specification	High-speed mode	-	-	5	
		Medium mode	-	-	25	
		Ultra-low-power mode	-	-	80	
t_D(6)	Propagation delay for 200 mV step with 100 mV overdrive	High-speed mode	-	40	100	ns
		Medium mode	-	0.5	1	µs
		Ultra-low-power mode	-	2	7	
V_{offset}	Comparator offset error	Full common mode range	-	±5	±20	mV
V_{hys}	Comparator hysteresis	No hysteresis	-	0	-	
		Low hysteresis	-	15	-	
		Medium hysteresis	-	30	-	
		High hysteresis	-	45	-	
I_{bias}	Comparator input bias current	-	(7)			nA

Table 118. COMP characteristics(1)(2) (continued)

Symbol	Parameter	Conditions	Min	Typ	Max	Unit
$I_{DDA(COMP)}$	Comparator consumption from V_{DDA}	High-speed mode, static	-	48	90	µA
		High-speed mode, with 50 kHz, ±100 mV overdrive square signal	-	50	-	
		Medium mode, static	-	3	6	
		Medium mode, with 50 kHz, ±100 mV overdrive square signal	-	3.75	-	
		Ultra-low-power mode, static	-	0.3	1	
		Ultra-low-power mode, with 50 kHz, ±100 mV overdrive square signal	-	0.65	-	

1. Specified by design and not tested in production, unless otherwise specified.
2. The input capacitance is negligible compared to the I/O capacitance.
3. Refer to *Table 37: Embedded internal voltage reference*.
4. No V_{REFINT} division, includes only buffer consumption.
5. V_{REFINT} division, includes resistor bridge and buffer consumption.
6. Evaluated by characterization. Not tested in production.
7. Mostly I/O leakage when used in analog mode. Refer to I_{lkg} parameter in *Table 95: I/O static characteristics*.

5.3.27 Operational amplifiers characteristics

Table 119. OPAMP characteristics(1)(2)

Symbol	Parameter	Conditions	Min	Typ	Max	Unit
V_{DDA}	Analog supply voltage range for OPAMP ON	-	1.60	-	3.6	V
CMIR	Common mode input range	-	0	-	V_{DDA}	
VI_{OFFSET}	Input offset voltage	T_J = 30 °C, no load on output, Normal mode	-	-	±3	mV
		T_J= 30 °C, no load on output, Low-power mode	-	-	±3	
		All voltages and temperature, Normal mode	-	-	±7	
		All voltages and temperature, Low-power mode	-	-	±11.5	
ΔVI_{OFFSET}	Input offset voltage drift over temperature	Normal mode	-	±7	-	µV/°C
		Low-power mode	-	±15	-	
TRIMOFFSETP TRIMLPOFFSETP	Offset trim step at low common input voltage (0.1 × V_{DDA})	-	-	1.05	1.25	mV
TRIMOFFSETN TRIMLPOFFSETN	Offset trim step at high common input voltage (0.9 × V_{DDA})	-	-	1.05	1.25	

Table 119. OPAMP characteristics(1)(2) (continued)

Symbol	Parameter	Conditions		Min	Typ	Max	Unit
I_{LOAD}	Drive current	Normal mode		-	-	500	µA
		Low-power mode		-	-	100	
I_{LOAD_PGA}	Drive current in PGA mode	Normal mode		-	-	450	
		Low-power mode		-	-	50	
R_{LOAD}	Resistive load (connected to VSSA or VDDA)	Normal mode		3.9	-	-	kΩ
		Low-power mode		20	-	-	
C_{LOAD}	Capacitive load	-		-	-	50	pF
CMRR	Common mode rejection ratio	Normal mode		-	79	-	dB
		Low-power mode		-	69	-	
PSRR	Power supply rejection ratio	Normal mode	C_{LOAD} ≤ 50 pF, R_{LOAD} ≥ 3.9 kΩ(3), DC	35	75	-	
		Low-power mode	C_{LOAD} ≤ 50 pF, R_{LOAD} ≥ 20 kΩ(3), DC	32	69	-	
GBW	Gain bandwidth product	Normal mode		0.4	2	3.1	MHz
		Low-power mode		0.23	0.5	0.76	
SR(3)	Slew rate (from 10% and 90% of output voltage)	Normal mode	Standard speed mode (OPAHSM = 0)	0.5	1	3.2	V/µs
		Low-power mode		0.14	0.25	0.75	
		Normal mode	High speed mode (OPAHSM = 1)	1.4	3.2	5.6	
		Low-power mode		0.38	0.82	1.5	
AO	Open loop gain	Normal mode		72	105	-	dB
		Low-power mode		77	106	-	
φm	Phase margin	Normal mode		54	67	-	°
		Low-power mode		54	65	-	
GM	Gain margin	Normal mode		-	9	-	dB
		Low-power mode		-	17	-	
V_{OHSAT}(3)	High saturation voltage	Normal mode	I_{LOAD} max or R_{LOAD} min, Input at V_{DDA}	V_{DDA} - 100	-	-	mV
		Low-power mode		V_{DDA} - 50	-	-	
V_{OLSAT}(3)	Low saturation voltage	Normal mode	I_{LOAD} max or R_{LOAD} min, Input at 0 V	-	-	100	
		Low-power mode		-	-	50	

Table 119. OPAMP characteristics(1)(2) (continued)

Symbol	Parameter	Conditions		Min	Typ	Max	Unit
t_{WAKEUP}	Wake-up time from OFF state	Normal mode	C_{LOAD} ≤ 50 pF, R_{LOAD} ≥ 3.9 kΩ, follower config.	-	4	10	µs
		Low-power mode	C_{LOAD} ≤ 50 pF, R_{LOAD} ≥ 20kΩ, follower config.	-	20	40	
I_{bias}	OPAMP input bias current	General purpose input (all packages except UFBGA)		-	-	(4)	nA
		Dedicated input (UFBGA and TFBGA)	T_J ≤ 75 °C	-	-	7	
			T_J ≤ 85 °C	-	-	9	
			T_J ≤ 105 °C	-	-	18	
			T_J ≤ 125 °C	-	-	25	
PGA gain(3)	Non-inverting gain value	PGA_GAIN[1:0] = 00		-	2	-	-
		PGA_GAIN[1:0] = 01		-	4	-	
		PGA_GAIN[1:0] = 10		-	8	-	
		PGA_GAIN[1:0] = 11		-	16	-	
Rnetwork	R2/R1 internal resistance values in non-inverting PGA mode(5)	PGA gain = 2		-	80/80	-	kΩ/ kΩ
		PGA gain = 4		-	120/40	-	
		PGA gain = 8		-	140/20	-	
		PGA gain = 16		-	150/10	-	
Delta R	Resistance variation (R1 or R2)	-		-18	-	18	%
PGA gain error	PGA gain error	-		-1	-	1	
PGA BW	PGA bandwidth for different non inverting gain	PGA gain = 2		-	GBW/2	-	MHz
		PGA gain = 4		-	GBW/4	-	
		PGA gain = 8		-	GBW/8	-	
		PGA gain = 16		-	GBW/16	-	
en	Voltage noise density	Normal mode	At 1 kHz, output loaded with 3.9 kΩ	-	220	-	nV/ √Hz
		Low-power mode	At 1 kHz, output loaded with 20 kΩ	-	350	-	
		Normal mode	At 10 kHz, output loaded with 3.9 kΩ	-	190	-	
		Low-power mode	at 10 kHz, output loaded with 20 kΩ	-	210	-	

Table 119. OPAMP characteristics(1)(2) (continued)

Symbol	Parameter	Conditions		Min	Typ	Max	Unit
$I_{DDA(OPAMP)}$	OPAMP consumption from V_{DDA}	Normal mode	no load, quiescent mode, standard speed	-	130	190	µA
		Low-power mode		-	40	58	
		Normal mode	no load, quiescent mode, high-speed mode	-	138	205	
		Low-power mode		-	42	60	

1. Specified by design and not tested in production, unless otherwise specified.
2. OPA_RANGE must be set to 1 in OPAMP1_CSR.
3. Evaluated by characterization. Not tested in production.
4. Mostly I/O leakage when used in analog mode. Refer to I_{lkg} parameter in *Table 95: I/O static characteristics*.
5. R2 is the internal resistance between the OPAMP output and the OPAMP inverting input. R1 is the internal resistance between the OPAMP inverting input and ground. PGA gain = 1 + R2/R1.

Figure 37. OPAMP voltage noise density, normal mode, R_{LOAD} = 3.9 kΩ

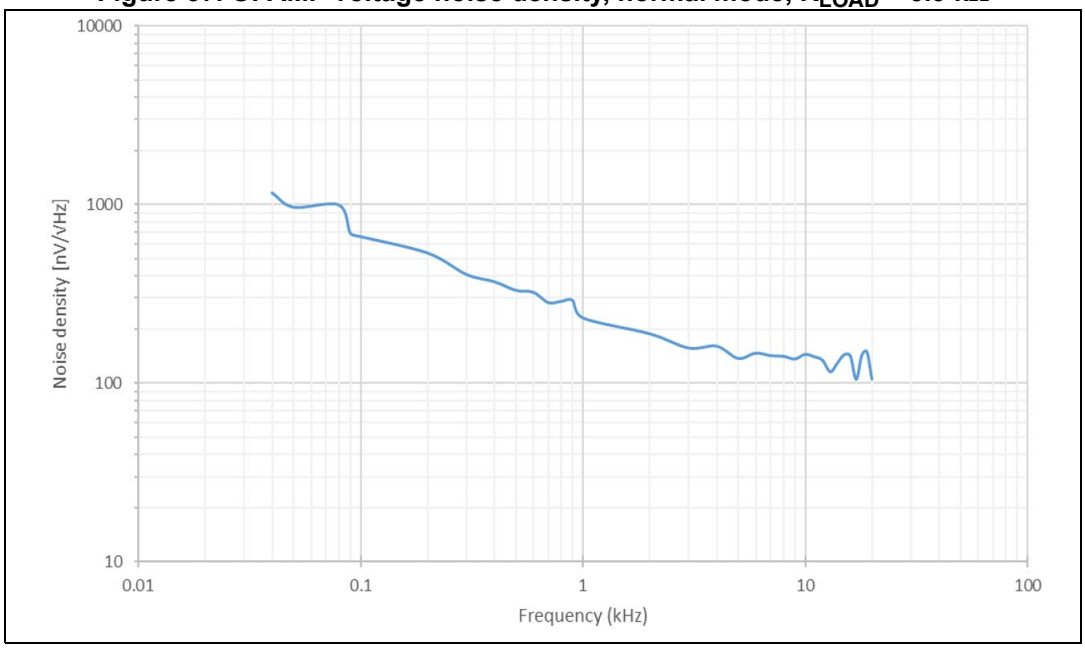

Figure 38. OPAMP voltage noise density, low-power mode, R_{LOAD} = 20 kΩ

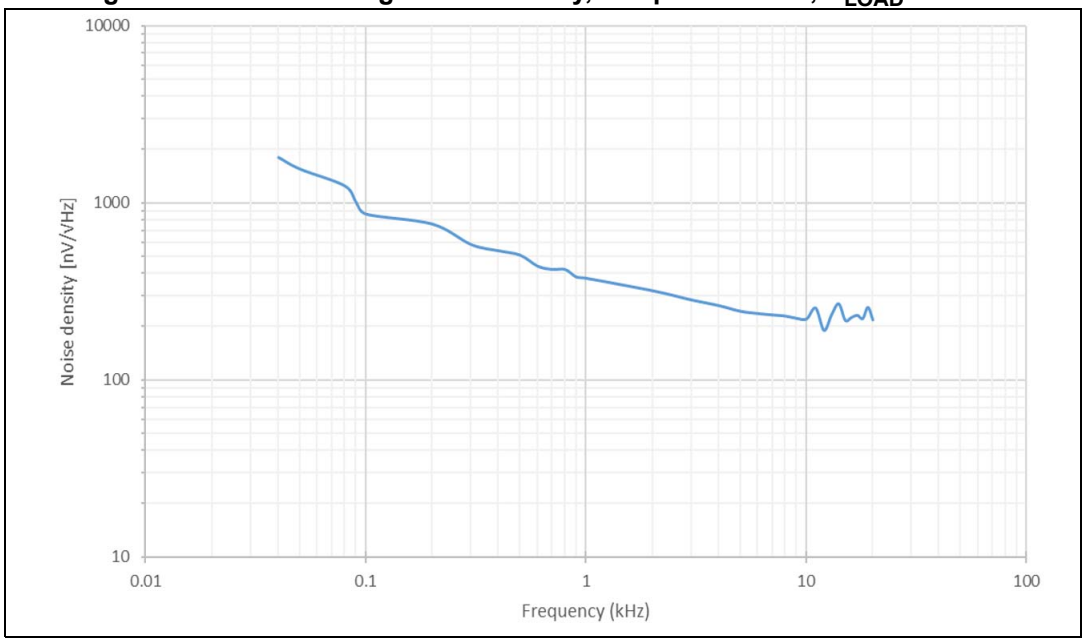

5.3.28 Temperature and backup domain supply thresholds monitoring

The temperature and backup domain supply monitoring characteristics are provided in the technical note STM32U54xxx/STM32U58xxx/STM32U5Axxx/STM32U5Gxxx MCUs for PCI products (TN1333) (NDA required).

5.3.29 ADF/MDF characteristics

Unless otherwise specified, the parameters given in the table below are derived from tests performed under the ambient temperature, f_{AHB} frequency and V_{DD} supply voltage conditions summarized in *Table 33*, with the following configuration:

- Output speed set to OSPEEDRy[1:0] = 10
- Capacitive load C_L = 30 pF
- Measurement points done at 0.5 × V_{DD} level
- I/O compensation cell activated
- HSLV activated when V_{DD} ≤ 2.7 V
- Voltage scaling range 1

Refer to *Section 5.3.15: I/O port characteristics* for more details on the input/output alternate function characteristics.

Table 120. ADF characteristics(1)

Symbol	Parameter	Conditions	Min	Typ	Max	Unit
f_{CCKI}	Input clock frequency via ADF_CCK[1:0] pin, in SLAVE SPI mode	$1.71 \le V_{DD} \le 3.6$ V	-	-	25	MHz
f_{CCKO}	Output clock frequency in MASTER SPI mode		-	-	25	
f_{CCKOLF}	Output clock frequency in LF_MASTER SPI mode		-	-	5	
f_{SYMB}	Input symbol rate in Manchester mode		-	-	20	
t_{HCCKI} t_{LCCKI}	ADF_CCK[1:0] input clock high and low time	In SLAVE SPI mode	2 × Tadf_proc_ck(2)	-	-	ns
t_{HCCKO} t_{LCCKO}	ADF_CCK[1:0] output clock high and low time	In MASTER SPI mode	2 × Tadf_proc_ck	-	-	
$t_{HCCKOLF}$ $t_{LCCKOLF}$	ADF_CCK[1:0] output clock high and low time	In LF_MASTER SPI mode	Tadf_proc_ck	-	-	
t_{SUCCKI}	Data setup time with respect to ADF_CCK[1:0] input	In SLAVE SPI mode: ADF_CCK[1:0] configured in input, measured on rising and falling edge	4	-	-	
t_{HDCCKI}	Data hold time with respect to ADF_CCK[1:0] input		0	-	-	
t_{SUCCKO}	Data setup time with respect to ADF_CCK[1:0] output	In MASTER SPI mode: ADF_CCK[1:0] configured in output, measured on rising and falling edge	3.5	-	-	
t_{HDCCKO}	Data hold time with respect to ADF_CCK[1:0] output		0.5	-	-	
$t_{SUCCKOLF}$	Data setup time with respect to ADF_CCK[1:0] output	In LF_MASTER SPI mode: ADF_CCK[1:0] configured in output, measured on rising and falling edge	19.5	-	-	
$t_{HDCCKOLF}$	Data hold time with respect to ADF_CCK[1:0] output		0	-	-	

1. Evaluated by characterization. Not tested in production.
2. Tadf_proc_ck is the period of the ADF processing clock.

Figure 39. ADF timing diagram

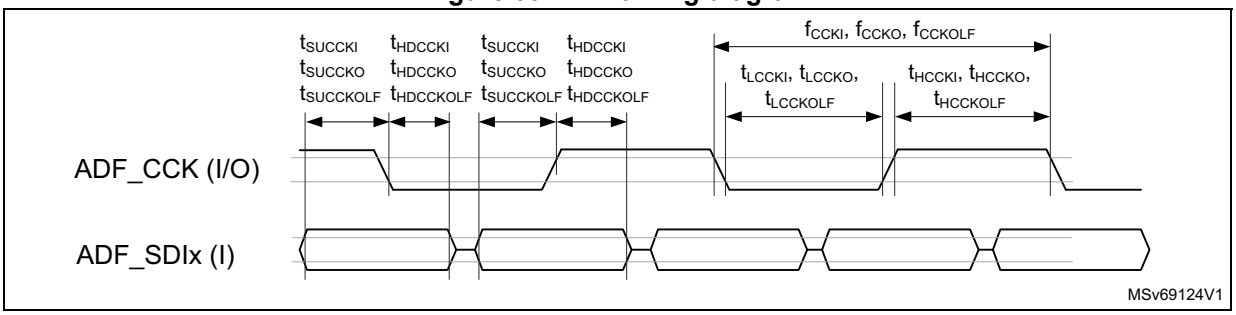

Table 121. MDF characteristics(1)

Symbol	Parameter	Conditions	Min	Typ	Max	Unit
f_{CKI}	Input clock frequency via MDF_CKIx pin, in SLAVE SPI mode	$1.71 \le V_{DD} \le 3.6$ V	-	-	25	MHz
f_{CCKI}	Input clock frequency via MDF_CCK[1:0] pin, in SLAVE SPI mode		-	-	25	
f_{CCKO}	Output clock frequency in MASTER SPI mode		-	-	25	
f_{CCKOLF}	Output clock frequency in LF_MASTER SPI mode		-	-	5	
f_{SYMB}	Input symbol rate in Manchester mode		-	-	20	
t_{HCKI} t_{LCKI}	MDF_CKIx input clock high and low time	In SLAVE SPI mode	2 × Tmdf_proc_ck(2)	-	-	ns
t_{HCCKI} t_{LCCKI}	MDF_CCK[1:0] input clock high and low time	In SLAVE SPI mode	2 × Tmdf_proc_ck	-	-	
t_{HCCKO} t_{LCCKO}	MDF_CCK[1:0] output clock high and low time	In MASTER SPI mode	2 × Tmdf_proc_ck	-	-	
$t_{HCCKOLF}$ $t_{LCCKOLF}$	MDF_CCK[1:0] output clock high and low time	In LF_MASTER SPI mode	Tmdf_proc_ck	-	-	
t_{SUCKI}	Data setup time with respect to MDF_CKIx input	In SLAVE SPI mode, measured on rising and falling edge	1.5	-	-	
t_{HDCKI}	Data hold time with respect to MDF_CKIx input		0	-	-	
t_{SUCCKI}	Data setup time with respect to MDF_CCK[1:0] input	In SLAVE SPI mode: MDF_CCK[1:0] configured in input, measured on rising and falling edge	2	-	-	
t_{HDCCKI}	Data hold time with respect to MDF_CCK[1:0] input		1	-	-	
t_{SUCCKO}	Data setup time with respect to MDF_CCK[1:0] output	In MASTER SPI mode: MDF_CCK[1:0] configured in output, measured on rising and falling edge	3	-	-	
t_{HDCCKO}	Data hold time with respect to MDF_CCK[1:0] output		3	-	-	
$t_{SUCCKOLF}$	Data setup time with respect to MDF_CCK[1:0] output	In LF_MASTER SPI mode, MDF_CCK[1:0] configured in output, measured on rising and falling edge	19.5	-	-	
$t_{HDCCKOLF}$	Data hold time with respect to MDF_CCK[1:0] output		0	-	-	

1. Evaluated by characterization. Not tested in production.
2. Tmdf_proc_ck is the period of the MDF processing clock.

Figure 40. MDF timing diagram

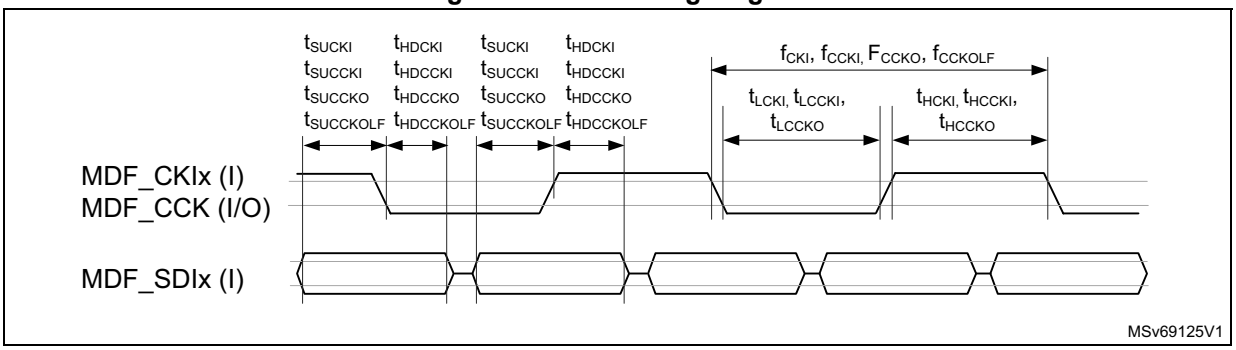

5.3.30 DCMI characteristics

Unless otherwise specified, the parameters given in the table below are derived from tests performed under the ambient temperature, f_{HCLK} frequency and V_{DD} supply voltage summarized in *Table 33*, with the following configuration:

- Output speed set to OSPEEDRy[1:0] = 10
- DCMI_PIXCLK polarity: falling
- DCMI_VSYNC and DCMI_HSYNC polarity: high
- Data formats: 14 bits
- Capacitive load C_L = 30 pF
- Measurement points done at 0.5 × V_{DD} level
- I/O compensation cell activated
- HSLV activated when V_{DD} ≤ 2.7 V
- Voltage scaling range 1

Table 122. DCMI characteristics(1)

Symbol	Parameter	Min	Max	Unit
-	Frequency ratio DCMI_PIXCLK/f_{HCLK}	-	0.4	-
DCMI_PIXCLK	Pixel clock input	-	64	MHz
D_{PIXEL}	Pixel clock input duty cycle	30	70	%
$t_{su(DATA)}$	Data input setup time	2.5	-	ns
$t_{h(DATA)}$	Data hold time	1	-	
$t_{su(HSYNC)}$ $t_{su(VSYNC)}$	DCMI_HSYNC and DCMI_VSYNC input setup times	2	-	
$t_{h(HSYNC)}$ $t_{h(VSYNC)}$	DCMI_HSYNC and DCMI_VSYNC input hold times	0	-	

1. Evaluated by characterization. Not tested in production.

Figure 41. DCMI timing diagram

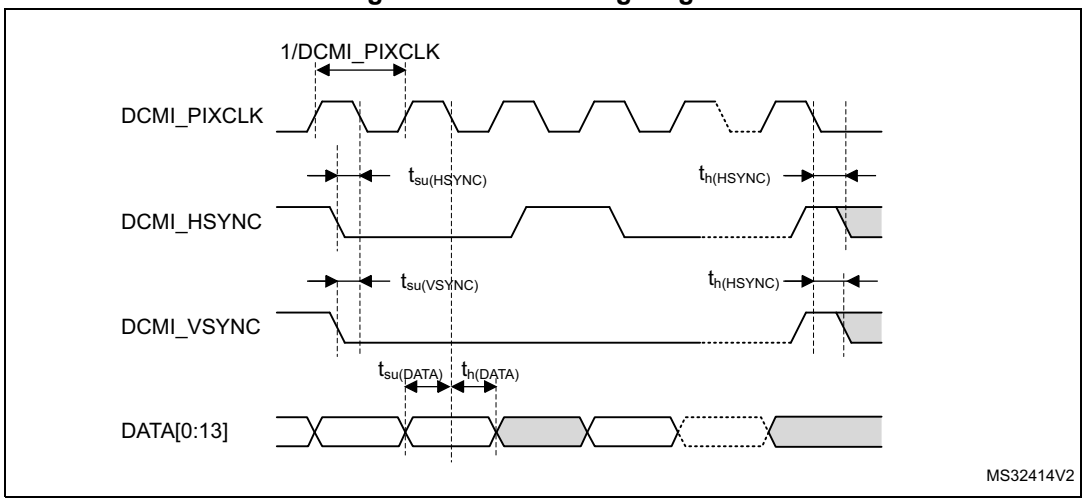

5.3.31 PSSI characteristics

Unless otherwise specified, the parameters given in the table below are derived from tests performed under the ambient temperature, f_{HCLK} frequency and V_{DD} supply voltage summarized in *Table 33*, with the following configuration:

- Output speed set to OSPEEDRy[1:0] = 10
- PSSI_PDCK polarity: falling
- PSSI_RDY and PSSI_DE polarity: low
- Bus width: 16 lines
- Data width: 32 bits
- Capacitive load C_L = 30 pF
- Measurement points done at 0.5 × V_{DD} level
- I/O compensation cell activated
- HSLV activated when $V_{DD} \leq 2.7$ V
- Voltage scaling range 1

Table 123. PSSI transmit characteristics(1)

Symbol	Parameter	Conditions	Min	Max	Unit
-	Frequency ratio DCMI_PDCK/f_{HCLK}	-	-	0.4	-
PSSI_PDCK	PSSI clock input	2.7 V ≤ V_{DD} ≤ 3.6 V	-	64(2)	MHz
		1.71 V ≤ V_{DD} ≤ 3.6 V	-	48.5(2)	
D_{PIXEL}	PSSI clock input duty cycle	-	30	70	%

Table 123. PSSI transmit characteristics(1) (continued)

Symbol	Parameter	Conditions	Min	Max	Unit
$t_{OV(DATA)}$	Data output valid time	2.7 V ≤ V_{DD} ≤ 3.6 V	-	13	ns
		1.71 V ≤ V_{DD} ≤ 3.6 V	-	20.5	
$t_{OH(DATA)}$	Data output hold time	1.71 V ≤ V_{DD} ≤ 3.6 V	7.5	-	
$t_{OV(DE)}$	DE output valid time		-	14	
$t_{OH(DE)}$	DE output hold time		6	-	
$t_{SU(RDY)}$	RDY input setup time		0	-	
$t_{H(RDY)}$	RDY input hold time		0	-	

1. Evaluated by characterization. Not tested in production.
2. This maximal frequency does not consider receiver setup and hold timings.

Figure 42. PSSI transmit timing diagram

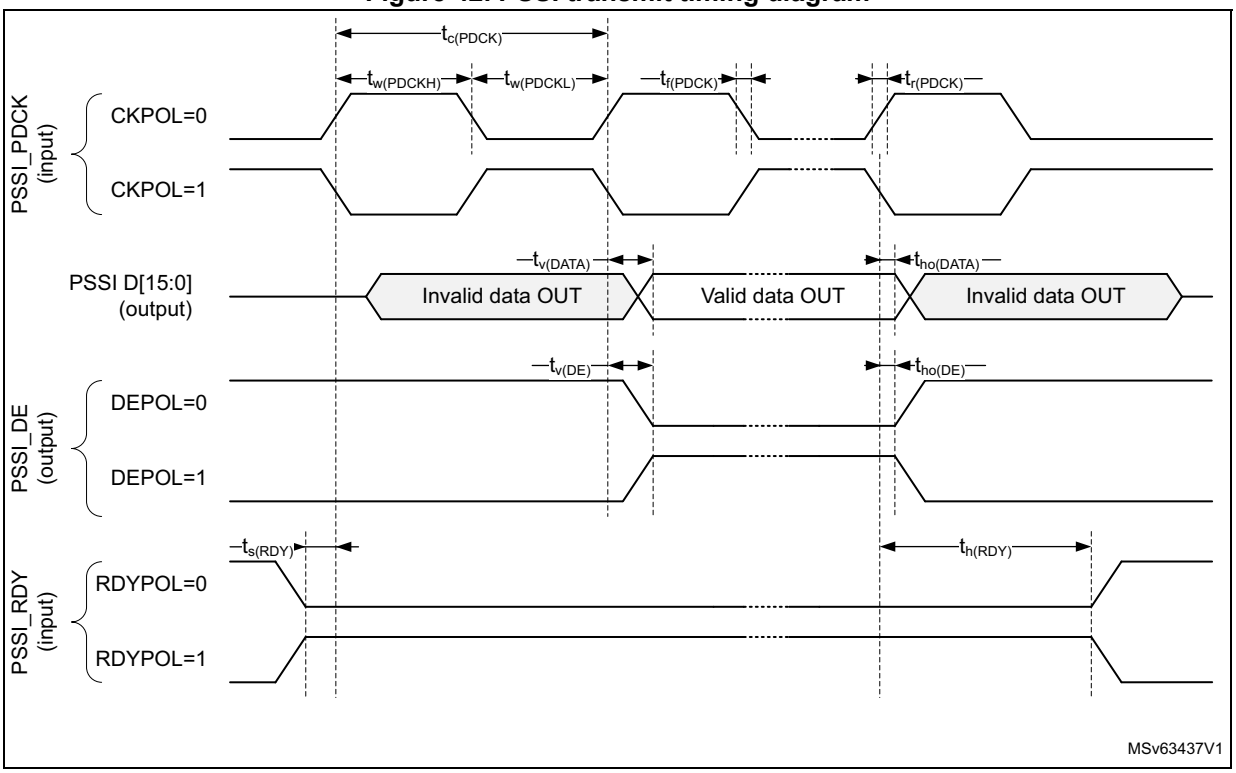

Table 124. PSSI receive characteristics(1)

Symbol	Parameter	Conditions	Min	Max	Unit
-	Frequency ratio DCMI_PDCK/f_{HCLK}	-	-	0.4	-
PSSI_PDCK	PSSI clock input	1.71 V ≤ V_{DD} ≤ 3.6 V	-	64	MHz
D_{PIXEL}	PSSI clock input duty cycle	-	30	70	%

Table 124. PSSI receive characteristics(1) (continued)

Symbol	Parameter	Conditions	Min	Max	Unit
$t_{SU(DATA)}$	Data input setup time	1.71 V ≤ V_{DD} ≤ 3.6 V	1.5	-	ns
$t_{H(DATA)}$	Data input hold time		1	-	
$t_{SU(DE)}$	DE input setup time		1	-	
$t_{H(DE)}$	DE input hold time		1.5	-	
$t_{OV(RDY)}$	RDY output valid time		-	13	
$t_{OH(RDY)}$	RDY output hold time		6	-	

1. Evaluated by characterization. Not tested in production.

Figure 43. PSSI receive timing diagram

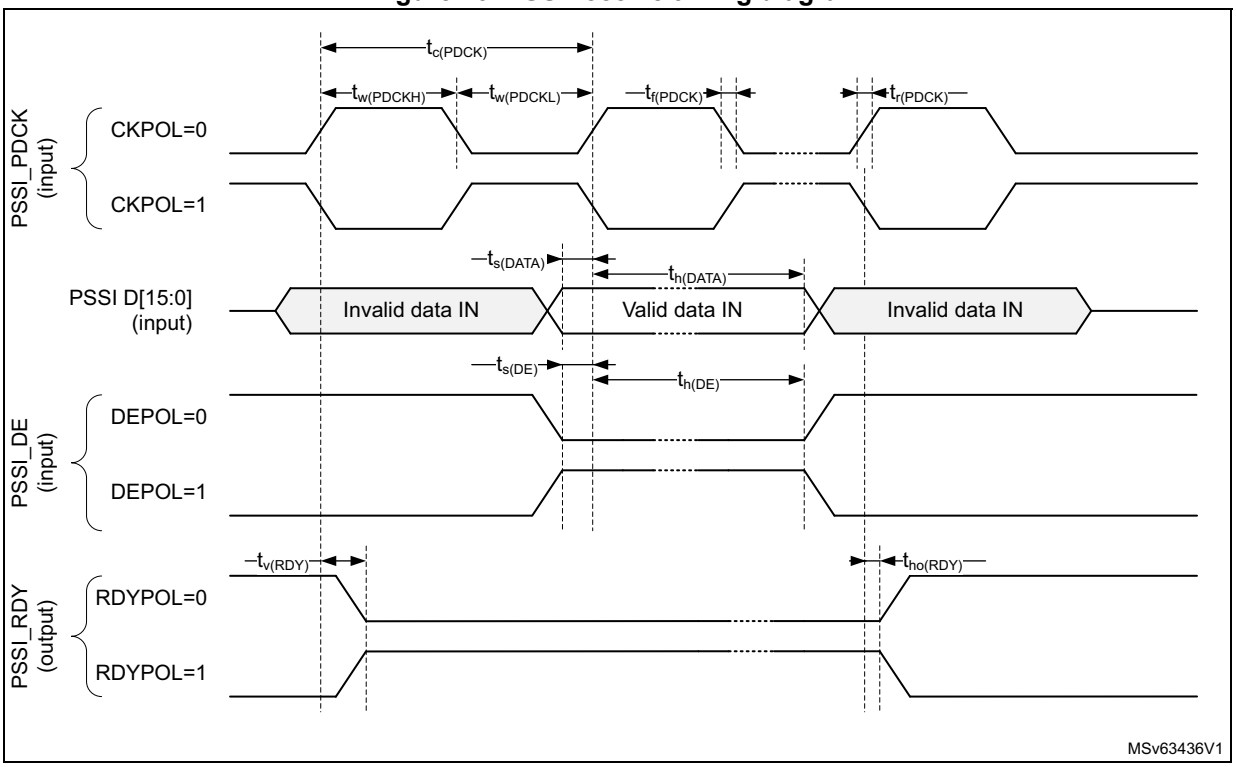

5.3.32 LCD-TFT controller (LTDC) characteristics

Unless otherwise specified, the parameters given in the table below are derived from tests performed under the ambient temperature, f_{HCLK} frequency and V_{DD} supply voltage summarized in *Table 33*, with the following configuration:

- LCD_CLK polarity: high
- LCD_DE polarity: low
- LCD_VSYNC and LCD_HSYNC polarity: high
- Pixel formats: 24 bits
- Output speed set to OSPEEDRy[1:0] = 10
- Capacitive load C_L = 30 pF
- Measurement points done at 0.5 × V_{DD} level
- I/O compensation cell activated
- HSLV activated when $V_{DD} \leq 2.7$ V
- Voltage scaling range 1

Table 125. LTDC characteristics(1)

Symbol	Parameter	Conditions	Min	Max	Unit
f_{CLK}	LTDC clock output frequency	2.7 V ≤ V_{DD} ≤ 3.6 V, C_L = 20 pF	-	116	MHz
		2.7 V ≤ V_{DD} ≤ 3.6 V		100	
		1.71 V ≤ V_{DD} ≤ 3.6 V		66.5	
D_{CLK}	LTDC clock output duty cycle		45	55	%
$t_{W(CLKH)}$ $t_{W(CLKL)}$	Clock High time, low time		$t_{W(CLK)}/2$ - 0.5	$t_{W(CLK)}/2$ + 0.5	ns
$t_{V(DATA)}$	Data output valid time	2.7 V ≤ V_{DD} ≤ 3.6 V	-	2.5	
		1.71 V ≤ V_{DD} ≤ 3.6 V		7.5	
$t_{H(DATA)}$	Data output hold time		0.5	-	
$t_{V(HSYNC)}$ $t_{V(VSYNC)}$ $t_{V(DE)}$	HSYNC/VSYNC/DE output valid time		-	3	
$t_{H(HSYNC)}$ $t_{H(VSYNC)}$ $t_{H(DE)}$	HSYNC/VSYNC/DE output hold time		1.5	-	

1. Evaluated by characterization. Not tested in production.

Figure 44. LTDC horizontal timing diagram

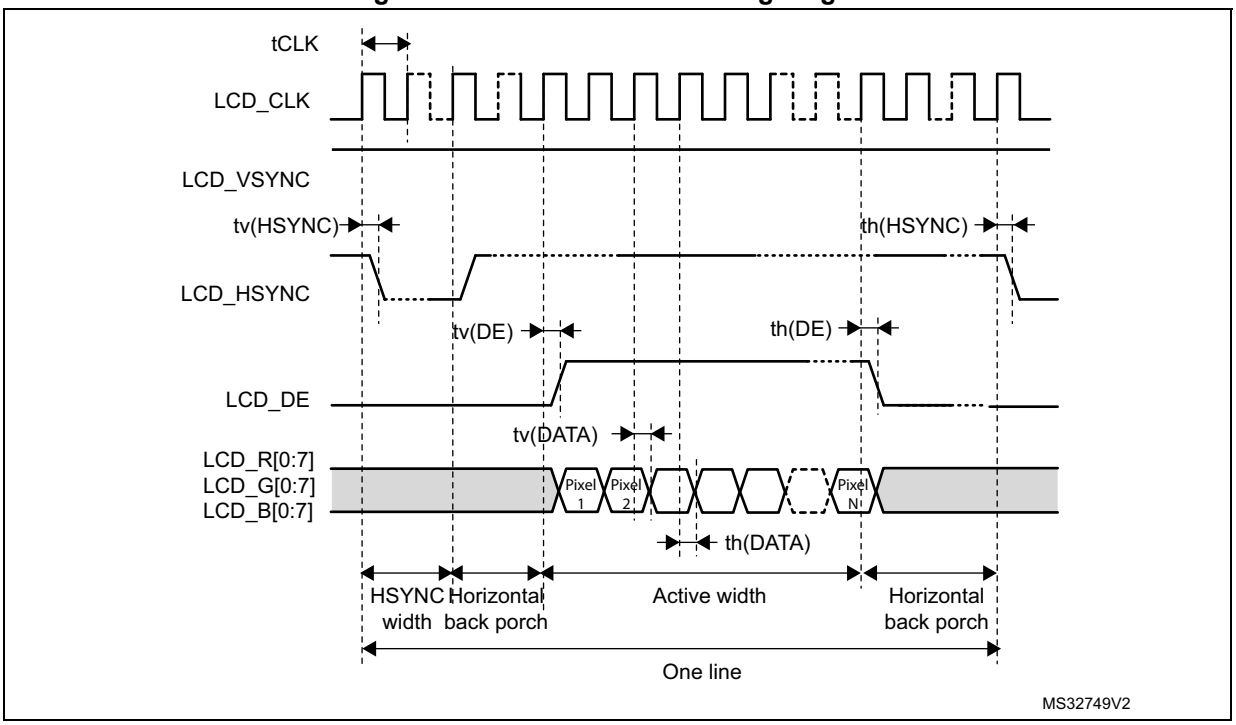

Figure 45. LTDC vertical timing diagram

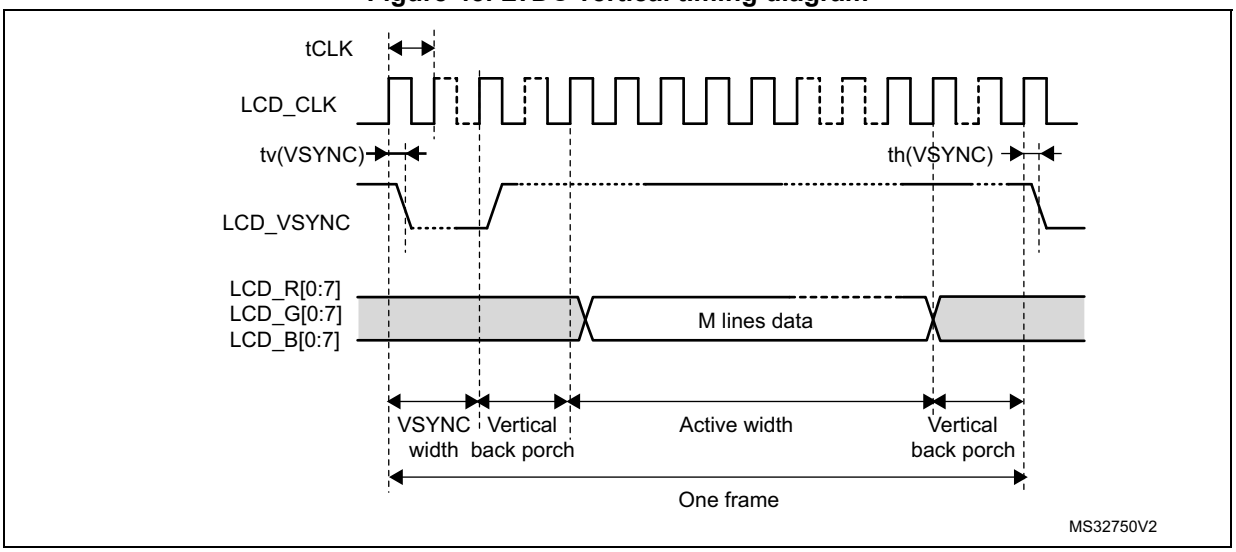

5.3.33 MIPI D-PHY characteristics

The parameters given in the table below are derived from tests performed under temperature and V_{DD} supply voltage conditions summarized in *Table 33*.

Table 126. MIPI D-PHY characteristics(1)

Symbol	Parameter	Min	Typ	Max	Unit
High-speed input/output characteristics					
U_{INST}(2)	UI instantaneous	2	-	12.5	ns
V_{CMTX}	High-speed transmit common mode voltage	150	200	250	mV
$\|\Delta V_{CMTX}\|$	V_{CMTX} mismatch when output is Differential-1 or Differential-0	-	-	5	
$\|V_{OD}\|$	High-speed transmit differential voltage	140	200	270	
$\|\Delta V_{OD}\|$	V_{OD} mismatch when output is Differential-1 or Differential-0	-	-	14	
V_{OHHS}	High-speed output high voltage	-	-	360	
Z_{OS}	Single-ended output impedance	40	50	62.5	Ω
ΔZ_{OS}	Single-ended output impedance mismatch	-	-	10	%
t_{HSr}, t_{HSf}(2)	20%-80% rise and fall time	100	-	0.3 × UI(3)	ps
Low-power receiver input characteristics					
V_{IL}	Logic 0 input voltage (not in ULP state)	-	-	550	mV
$V_{IL-ULPS}$	Logic 0 input voltage in ULP state	-	-	300	
V_{IH}	Input high-level voltage	880	-	-	
V_{hys}(2)	Voltage hysteresis	25	-	-	
Low-power emitter output characteristics					
V_{OL}	Output low level voltage	-50	-	50	mV
V_{OH}	Output high level voltage	1.1	1.2	1.2	V
Z_{OLP}	Output impedance of LP transmitter	110	-	-	Ω
t_{LPr}, t_{LPf}(2)	15%-85% rise and fall time	-	-	25	ns
Low-power contention detector characteristics					
V_{ILCD}	Logic 0 contention threshold	-	-	200	mV
V_{IHCD}	Logic 1 contention threshold	450	-	-	

1. Evaluated by characterization, not tested in production unless otherwise specified.
2. Specified by design. Not tested in production.
3. UI (unit interval) equals to the duration of any HS state on the clock lane.

Table 127. MIPI D-PHY AC characteristics LP mode and HS/LP transitions(1)

Symbol	Parameter	Min	Typ	Max	Unit
T_{LPX}	Transmitted length of any LP state period	50	-	-	ns
$T_{CLK-PREPARE}$	Time that the transmitter drives the clock lane LP-00 line state immediately before the HS-0 line state, starting the HS transmission	38	-	95	
$T_{CLK-PREPARE}$ + $T_{CLK-ZERO}$	$T_{CLK-PREPARE}$ + time that the transmitter drives the HS-0 state prior to starting the clock	300	-	-	
$T_{CLK-PRE}$	Time that the HS clock must be driven by the transmitter prior to any associated data lane beginning the transition from LP to HS mode	8	-	-	UI(2)
$T_{CLK-POST}$	Time that the transmitter continues to send HS clock after the last associated data lane transitioned to LP mode	62 + 52 × UI	-	-	ns
$T_{CLK-TRAIL}$	Time that the transmitter drives the HS-0 state after the last payload clock bit of an HS transmission burst	60	-	-	
$T_{HS-PREPARE}$	Time that the transmitter drives the data lane LP-00 line state immediately before the HS-0 line state starting the HS transmission	40 + 4 × UI	-	85 + 6 × UI	
$T_{HS-PREPARE}$ + $T_{HS-ZERO}$	$T_{HS-PREPARE}$ + time that the transmitter drives the HS-0 state prior to transmitting the sync sequence	145 + 10 × UI	-	-	
$T_{HS-TRAIL}$	Time that the transmitter drives the flipped differential state after last payload data bit of a HS transmission burst	Max (n × 8 × UI, 60 + n × 4 × UI)	-	-	
$T_{HS-EXIT}$	Time that the transmitter drives LP-11 following a HS burst	100	-	-	
T_{REOT}	30%-85% rise and fall time	-	-	35(3)	
T_{EOT}	Transmitted time interval from the start of $T_{HS-TRAIL}$ or $T_{CLK-TRAIL}$, to the start of the LP-11 state following a HS burst	-	-	105 + n × 12 × UI	

1. Evaluated by characterization. Not tested in production.
2. UI (unit interval) equals to the duration of any HS state on the clock lane.
3. For V_{DD} above 3 V, this parameter may be degraded in the 55°C to 125°C range. For V_{DD} = 1.8 V, this parameter may be degraded in the 25°C to 125°C range.

Figure 46. MIPI D-PHY HS/LP clock lane transition

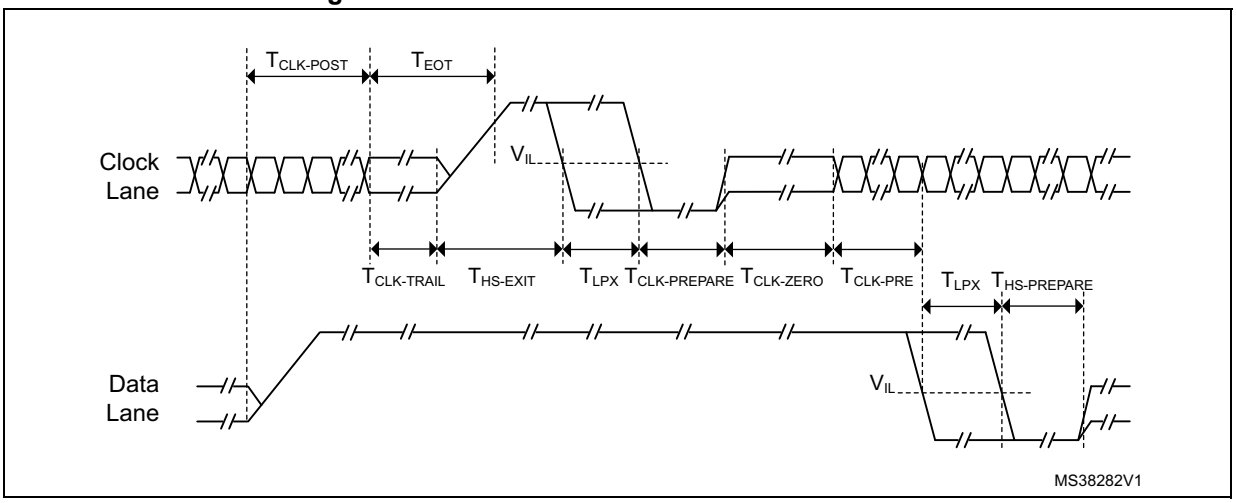

Figure 47. MIPI D-PHY HS/LP data lane transition

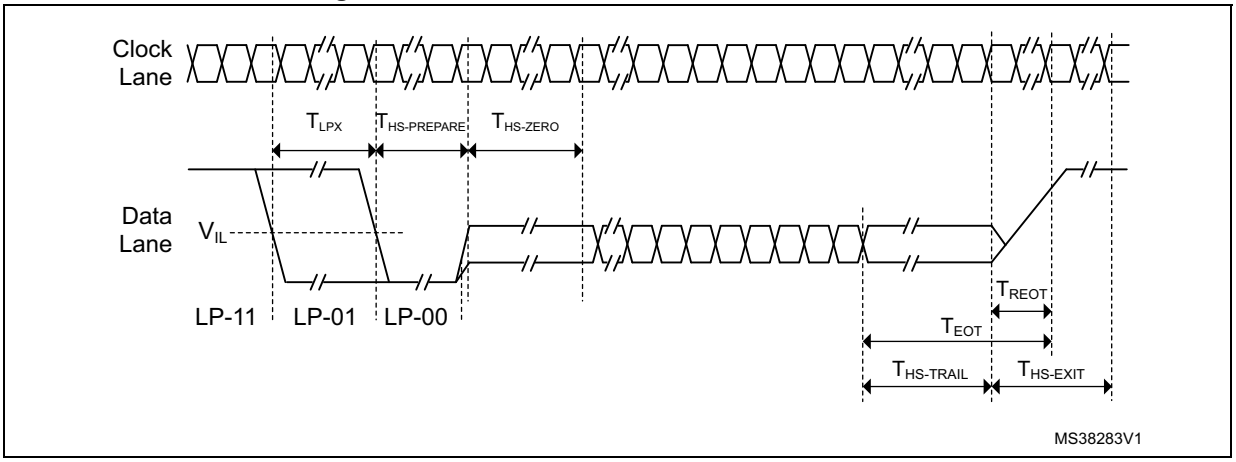

Table 128. DSI-PLL characteristics(1)

Symbol	Parameter	Condition	Min	Typ	Max	Unit
f_{PLL_IN}	PLL input clock	-	4	-	48	MHz
f_{PLL_INFIN}	PFD input clock	-	2	-	48	
f_{PLL_OUT}	PLL multiplier output clock	-	0.976	-	1000	
f_{VCO_OUT}	PLL VCO output	-	500	-	1000	
t_{LOCK}	PLL lock time	-	-	-	400	µs
I_{DD_PLL}	PLL power consumption on VDD11DSI, for PFD input clock = 2 MHz	f_{VCO_OUT} = 500 MHz	-	0.25	0.27	mA
		f_{VCO_OUT} = 600 MHz	-	0.29	0.31	
		f_{VCO_OUT} = 1000 MHz	-	0.51	0.53	
I_{DD_PLL}	PLL power consumption on VDD11DSI, for PFD input clock = 48 MHz	f_{VCO_OUT} = 500 MHz	-	0.7	0.95	
		f_{VCO_OUT} = 600 MHz	-	0.76	1.01	
		f_{VCO_OUT} = 1000 MHz	-	1	1.22	

1. Evaluated by characterization. Not tested in production.

Table 129. DSI current consumption characteristics on V_{DDDSI}(1)

Symbol	Parameter	Condition	Min	Typ	Max	Unit
I_{DD_DSI}	DSI system (Host, PLL and D-PHY) current consumption on V_{DDDSI}	Ultra-low-power mode (PLL OFF)	-	194	208	µA
		Stop state - 1 data lane (PLL OFF)	-	2.74	3.2	mA
		Stop state - 2 data lanes (PLL OFF)	-	4.08	4.8	
I_{DD_DSILP}	DSI system current consumption on V_{DDDSI} in LP mode communication(2)	10 MHz escape clock - 1 data lane (PLL OFF)	-	4.32	4.8	
		10 MHz escape clock - 2 data lanes (PLL OFF)	-	5.65	6.4	
		20 MHz escape clock - 1 data lane (PLL OFF)	-	5.94	6.6	
		20 MHz escape clock - 2 data lanes (PLL OFF)	-	7.27	8.2	
I_{DD_DSIHS}	DSI system (Host, PLL and D-PHY) current consumption on V_{DDDSI} in HS mode communication(3)	300 Mbit/s - 1 data lane (PLL ON)	-	2.98	3.1	
		300 Mbit/s - 2 data lanes (PLL ON)	-	4.33	4.5	
		500 Mbit/s - 1 data lane (PLL ON)	-	3.21	3.4	
		500 Mbit/s - 2 data lanes (PLL ON)	-	4.54	4.8	
	DSI system (Host, PLL and D-PHY) current consumption on V_{DDDSI} in HS mode with CLK like payload	500 Mbit/s - 2 data lanes (PLL ON)	-	4.56	4.8	

1. Evaluated by characterization. Not tested in production.
2. Values based on an average traffic in LP command mode.
3. Values based on an average traffic (3/4 HS traffic and 1/4 LP) in Video mode.

Table 130. DSI current consumption characteristics on $V_{DD11DSI}$(1)

Symbol	Parameter	Condition	Min	Typ	Max	Unit
I_{DD11_DSI}	DSI system (Host, PLL and D-PHY) current consumption on $V_{DD11DSI}$	Ultra-low-power mode (PLL OFF)	-	7.7	48	µA
		Stop state - 1 data lane (PLL OFF)	-	0.56	1.1	mA
		Stop state - 2 data lanes (PLL OFF)	-	0.83	1.7	

Table 130. DSI current consumption characteristics on $V_{DD11DSI}$(1) (continued)

Symbol	Parameter	Condition	Min	Typ	Max	Unit
I_{DD11_DSILP}	DSI system current consumption on $V_{DD11DSI}$ in LP mode communication(2)	10 MHz escape clock - 1 data lane (PLL OFF)	-	0.56	1.2	mA
		10 MHz escape clock - 2 data lanes (PLL OFF)	-	0.83	1.7	
		20 MHz escape clock - 1 data lane (PLL OFF)	-	0.56	1.2	
		20 MHz escape clock - 2 lanes (PLL OFF)	-	0.83	1.7	
I_{DD11_DSIHS}	DSI system (Host, PLL and D-PHY) current consumption on $V_{DD11DSI}$ in HS mode communication(3)	300 Mbit/s - 1 data lane (PLL ON)	-	6.45	8.5	
		300 Mbit/s - 2 data lanes (PLL ON)	-	7.8	10.3	
		500 Mbit/s - 1 data lane (PLL ON)	-	7.4	9.7	
		500 Mbit/s - 2 data lanes (PLL ON)	-	8.8	11.5	
	DSI system (Host, PLL and D-PHY) current consumption on $V_{DD11DSI}$ in HS mode with CLK like payload	500 Mbit/s - 2 data lanes (PLL ON)	-	10.1	13.3	

1. Evaluated by characterization. Not tested in production.
2. Values based on an average traffic in LP command mode.
3. Values based on an average traffic (3/4 HS traffic and 1/4 LP) in video mode.

5.3.34 Timer characteristics

The parameters given in the following tables are specified by design, not tested in production.

Refer to *Section 5.3.15: I/O port characteristics* for details on the input/output alternate function characteristics (output compare, input capture, external clock, PWM output).

Table 131. TIMx(1) characteristics

Symbol	Parameter	Conditions	Min	Max	Unit
$t_{res(TIM)}$	Timer resolution time	-	1	-	$t_{TIMxCLK}$
		$f_{TIMxCLK}$ = 160 MHz	6.25	-	ns
f_{EXT}	Timer external clock frequency on CH1 to CH4	-	0	$f_{TIMxCLK}/2$	MHz
		$f_{TIMxCLK}$ = 160 MHz	0	80	
Res_{TIM}	Timer resolution	TIMx (except TIM2/3/4/5)	-	16	bit
		TIM2/3/4/5	-	32	
$t_{COUNTER}$	16-bit counter clock period	-	1	65536	$t_{TIMxCLK}$
		$f_{TIMxCLK}$ = 160 MHz	0.007	409.6	µs

Table 131. TIMx(1) characteristics (continued)

Symbol	Parameter	Conditions	Min	Max	Unit
t_{MAX_COUNT}	Maximum possible count with 32-bit counter	-	-	65536 × 65536	$t_{TIMxCLK}$
		$f_{TIMxCLK}$ = 160 MHz	-	26.843	s

1. TIMx is used as a general term in which x stands for 1, 2, 3, 4, 5, 6, 7, 8, 15, 16, or 17.

Table 132. IWDG min/max timeout period at 32 kHz (LSI)(1)

Prescaler divider	PR[2:0] bits	Min timeout RL[11:0] = 0x000	Max timeout RL[11:0] = 0xFFF	Unit
/4	0	0.125	512	ms
/8	1	0.250	1024	
/16	2	0.500	2048	
/32	3	1.0	4096	
/64	4	2.0	8192	
/128	5	4.0	16384	
/256	6 or 7	8.0	32768	

1. The exact timings still depend on the phasing of the APB interface clock versus the LSI clock, so that there is always a full RC period of uncertainty.

Table 133. WWDG min/max timeout value at 160 MHz (PCLK)

Prescaler	WDGTB	Min timeout value	Max timeout value	Unit
1	0	0.025	1.638	ms
2	1	0.051	3.276	
4	2	0.102	6.553	
8	3	0.204	13.107	
16	4	0.409	26.214	
32	5	0.819	52.428	
64	6	1.638	104.858	
128	7	3.276	209.715	

5.3.35 FSMC characteristics

Unless otherwise specified, the parameters given in the tables below are derived from tests performed under the ambient temperature, f_{HCLK} frequency and V_{DD} supply voltage conditions summarized in *Table 33*, with the following configuration:

- Output speed set to OSPEEDRy[1:0] = 10
- Capacitive load C_L = 30 pF, unless otherwise specified
- Measurement points done at 0.5 × V_{DD} level
- I/O compensation cell activated
- HSLV activated when $V_{DD} \leq 2.7$ V
- Voltage scaling range 1

Refer to *Section 5.3.15: I/O port characteristics* for more details on the input/output characteristics.

Asynchronous waveforms and timings

Figure 48 to *Figure 51* represent asynchronous waveforms and *Table 134* to *Table 141* provide the corresponding timings. The results shown in these tables are obtained with the following FMC configuration:

- AddressSetupTime (ADDSET) = 0x1
- AddressHoldTime (ADDHLD) = 0x1
- ByteLaneSetup (NBLSET) = 0x1
- DataSetupTime (DATAST) = 0x1 (except for asynchronous NWAIT mode, DataSetupTime = 0x5)
- DataHoldTime (DATAHLD) = 0x1 (0x0 for write operation)
- BusTurnAroundDuration = 0x0
- Capacitive load C_L = 30 pF

In all timing tables, the T_{HCLK} is the HCLK clock period.

Figure 48. Asynchronous non-multiplexed SRAM/PSRAM/NOR read waveforms

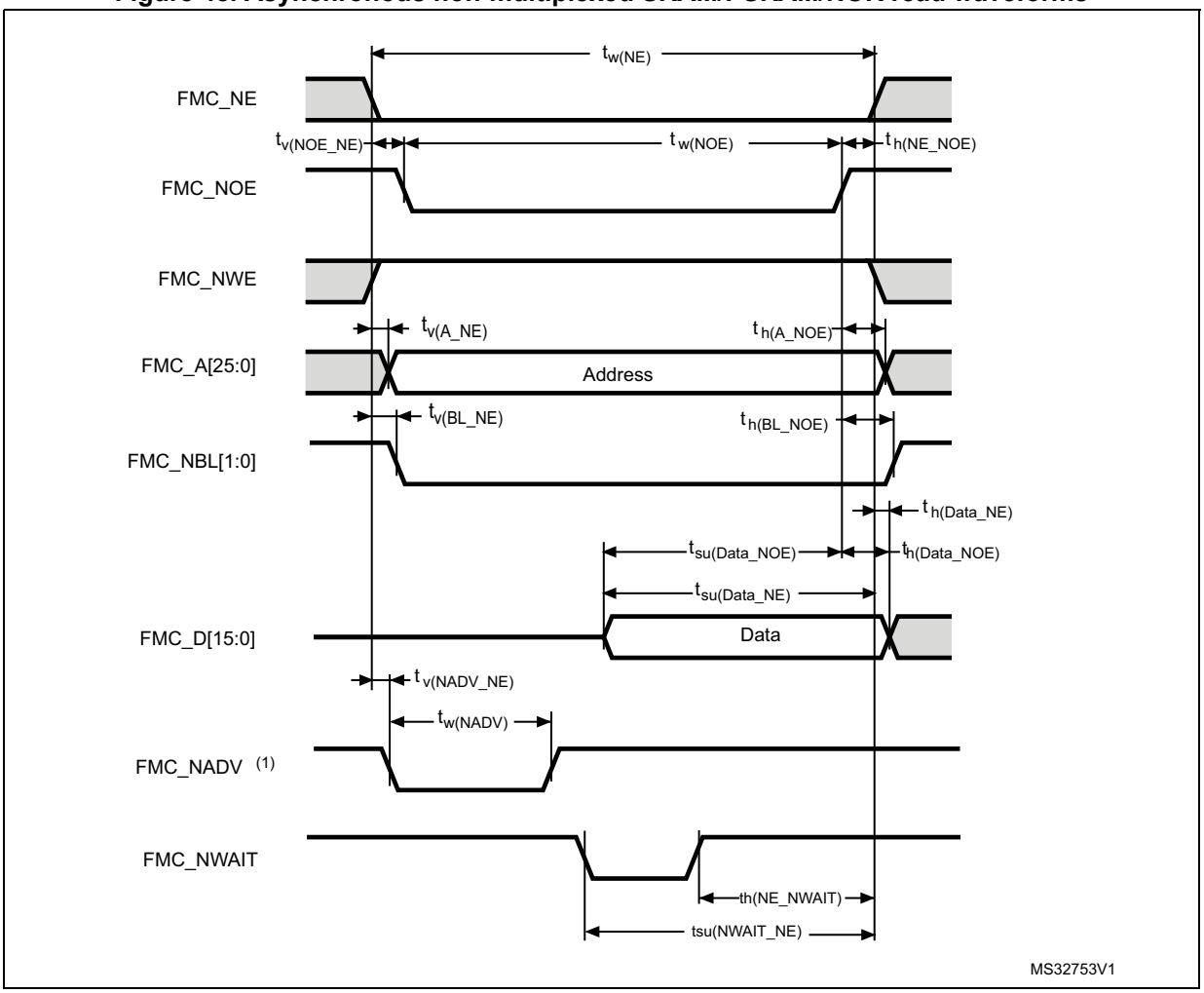

Table 134. Asynchronous non-multiplexed SRAM/PSRAM/NOR read timings(1)

Symbol	Parameter	Min	Max	Unit
$t_{w(NE)}$	FMC_NE low time	$3 \times t_{HCLK} - 1$	$3 \times t_{HCLK} + 1$	ns
$t_{v(NOE_NE)}$	FMC_NEx low to FMC_NOE low	0	5	
$t_{w(NOE)}$	FMC_NOE low time	$2 \times t_{HCLK} - 1$	$2 \times t_{HCLK} + 1$	
$t_{h(NE_NOE)}$	FMC_NOE high to FMC_NE high hold time	T_{HCLK}	-	
$t_{v(A_NE)}$	FMC_NEx low to FMC_A valid	-	2	
$t_{h(A_NOE)}$	Address hold time after FMC_NOE high	$2 \times t_{HCLK} - 1$	-	
$t_{su(Data_NE)}$	Data to FMC_NEx high setup time	$t_{HCLK} + 15$	-	
$t_{su(Data_NOE)}$	Data to FMC_NOEx high setup time	15	-	
$t_{h(Data_NOE)}$	Data hold time after FMC_NOE high	0	-	
$t_{h(Data_NE)}$	Data hold time after FMC_NEx high	0	-	
$t_{v(NADV_NE)}$	FMC_NEx low to FMC_NADV low	-	1.5	
$t_{w(NADV)}$	FMC_NADV low time	-	$T_{HCLK} + 1$	

1. Evaluated by characterization. Not tested in production.

Table 135. Asynchronous non-multiplexed SRAM/PSRAM/NOR read-NWAIT timings(1)

Symbol	Parameter	Min	Max	Unit
$t_{w(NE)}$	FMC_NE low time	$8 \times t_{HCLK} - 1$	$8 \times t_{HCLK} + 1$	ns
$t_{w(NOE)}$	FMC_NWE low time	$7 \times t_{HCLK} - 1$	$7 \times t_{HCLK} + 1$	
$t_{w(NWAIT)}$	FMC_NWAIT(2) low time	t_{HCLK}	-	
$t_{su(NWAIT_NE)}$	FMC_NWAIT valid before FMC_NEx high	$5 \times t_{HCLK} + 9.5$	-	
$t_{h(NE_NWAIT)}$	FMC_NEx hold time after FMC_NWAIT invalid	$4 \times t_{HCLK} + 10$	-	

1. Evaluated by characterization. Not tested in production.
2. NWAIT pulse is equal to one HCLK cycle.

Figure 49. Asynchronous non-multiplexed SRAM/PSRAM/NOR write waveforms

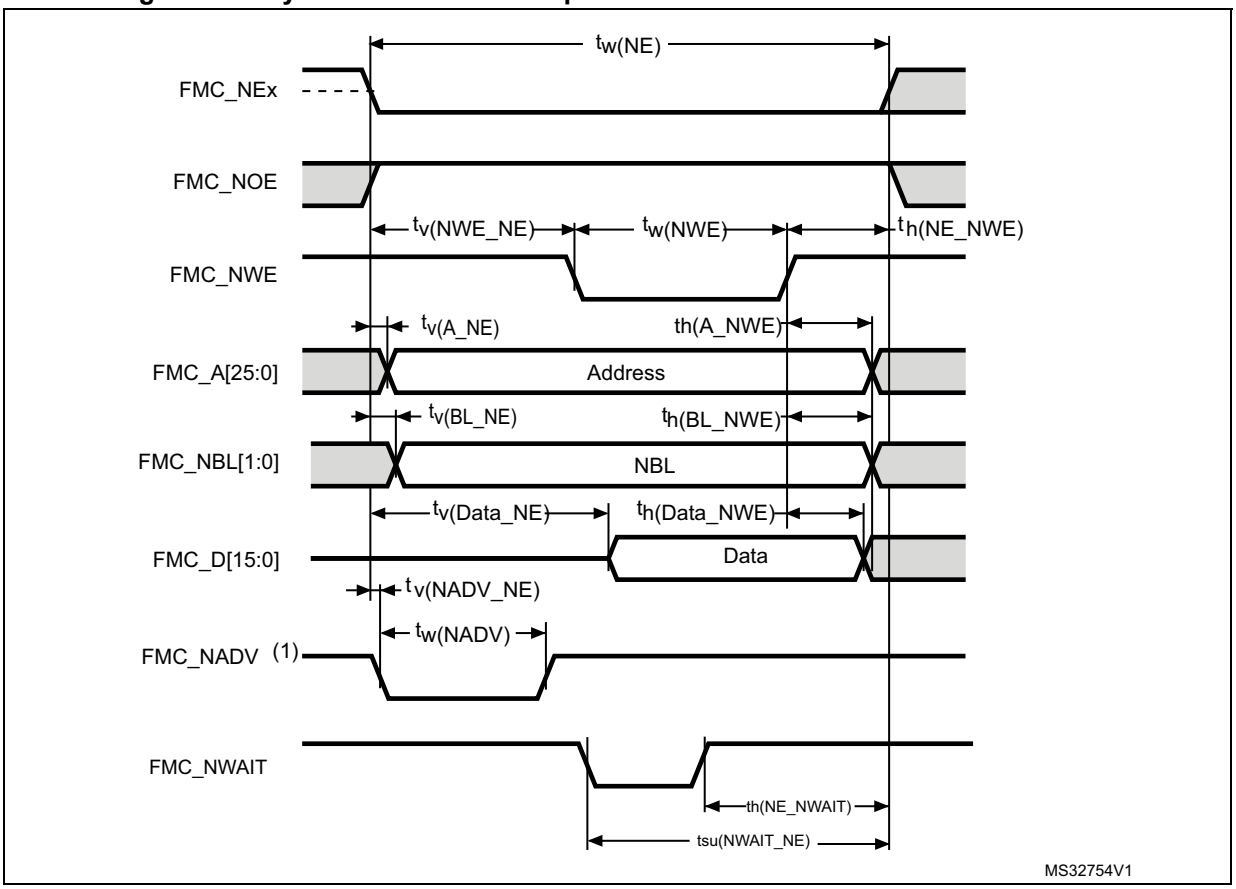

Table 136. Asynchronous non-multiplexed SRAM/PSRAM/NOR write timings(1)

Symbol	Parameter	Min	Max	Unit
$t_{w(NE)}$	FMC_NE low time	$3 \times t_{HCLK} - 1$	$3 \times t_{HCLK} + 1$	ns
$t_{v(NWE_NE)}$	FMC_NEx low to FMC_NWE low	$t_{HCLK} - 1$	t_{HCLK}	
$t_{w(NWE)}$	FMC_NWE low time	$t_{HCLK} - 0.5$	$t_{HCLK} + 0.5$	
$t_{h(NE_NWE)}$	FMC_NWE high to FMC_NE high hold time	t_{HCLK}	-	
$t_{v(A_NE)}$	FMC_NEx low to FMC_A valid	-	1	
$t_{h(A_NWE)}$	Address hold time after FMC_NWE high	$t_{HCLK} - 0.5$	-	
$t_{v(BL_NE)}$	FMC_NEx low to FMC_BL valid	-	0.5	
$t_{h(BL_NWE)}$	FMC_BL hold time after FMC_NWE high	$t_{HCLK} - 0.5$	-	
$t_{v(Data_NE)}$	FMC_NEx low to Data valid	-	$t_{HCLK} + 2$	
$t_{h(Data_NWE)}$	Data hold time after FMC_NWE high	t_{HCLK}	-	
$t_{v(NADV_NE)}$	FMC_NEx low to FMC_NADV low	-	2	
$t_{w(NADV)}$	FMC_NADV low time	-	$t_{HCLK} + 1$	

1. Evaluated by characterization. Not tested in production.

Table 137. Asynchronous non-multiplexed SRAM/PSRAM/NOR write-NWAIT timings(1)

Symbol	Parameter	Min	Max	Unit
$t_{w(NE)}$	FMC_NE low time	$8 \times t_{HCLK} - 1$	$8 \times t_{HCLK} + 1$	ns
$t_{w(NWE)}$	FMC_NWE low time	$6 \times t_{HCLK} - 1$	$6 \times t_{HCLK} + 1$	
$t_{su(NWAIT_NE)}$	FMC_NWAIT(2) valid before FMC_NEx high	$5 \times t_{HCLK} + 13$	-	
$t_{h(NE_NWAIT)}$	FMC_NEx hold time after FMC_NWAIT invalid	$4 \times t_{HCLK} + 12$	-	

1. Evaluated by characterization. Not tested in production.
2. NWAIT pulse is equal to one HCLK cycle.

Figure 50. Asynchronous multiplexed PSRAM/NOR read waveforms

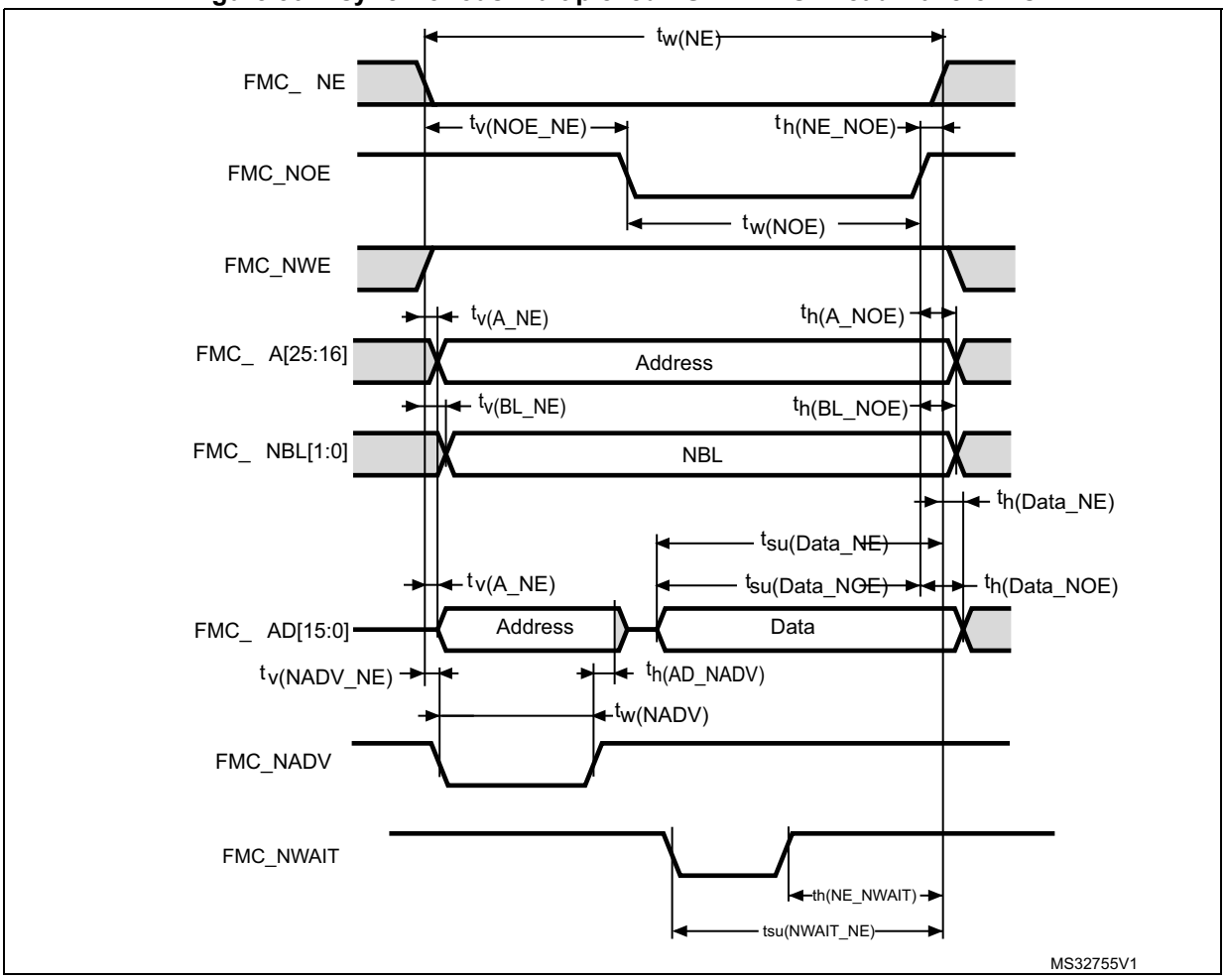

Table 138. Asynchronous multiplexed PSRAM/NOR read timings(1)

Symbol	Parameter	Min	Max	Unit
$t_{w(NE)}$	FMC_NE low time	$3 \times t_{HCLK} - 1$	$3 \times t_{HCLK} + 1$	ns
$t_{v(NOE_NE)}$	FMC_NEx low to FMC_NOE low	0	5	
$t_{w(NOE)}$	FMC_NOE low time	$2 \times t_{HCLK} - 0.5$	$2 \times t_{HCLK} + 0.5$	
$t_{h(NE_NOE)}$	FMC_NOE high to FMC_NE high hold time	t_{HCLK}	-	
$t_{v(A_NE)}$	FMC_NEx low to FMC_A valid	-	1.5	
$t_{v(NADV_NE)}$	FMC_NEx low to FMC_NADV low	0	1.5	
$t_{w(NADV)}$	FMC_NADV low time	$t_{HCLK} - 0.5$	$t_{HCLK} + 1$	
$t_{h(AD_NADV)}$	FMC_AD(address) valid hold time after FMC_NADV high)	$t_{HCLK} - 4$	-	
$t_{h(A_NOE)}$	Address hold time after FMC_NOE high	$t_{HCLK} - 1$	-	
$t_{su(Data_NE)}$	Data to FMC_NEx high setup time	$t_{HCLK} + 15$	-	
$t_{su(Data_NOE)}$	Data to FMC_NOE high setup time	15	-	
$t_{h(Data_NE)}$	Data hold time after FMC_NEx high	0	-	
$t_{h(Data_NOE)}$	Data hold time after FMC_NOE high	0	-	

1. Evaluated by characterization. Not tested in production.

Table 139. Asynchronous multiplexed PSRAM/NOR read-NWAIT timings(1)

Symbol	Parameter	Min	Max	Unit
$t_{w(NE)}$	FMC_NE low time	$8 \times t_{HCLK} - 1$	$8 \times t_{HCLK} + 1$	ns
$t_{w(NOE)}$	FMC_NOE low time	$7 \times t_{HCLK} - 1$	$7 \times t_{HCLK} + 1$	
$t_{su(NWAIT_NE)}$	FMC_NWAIT(2) valid before FMC_NEx high	$4 \times t_{HCLK} + 9.5$	-	
$t_{h(NE_NWAIT)}$	FMC_NEx hold time after FMC_NWAIT invalid	$3 \times t_{HCLK} + 10$	-	

1. Evaluated by characterization. Not tested in production.
2. NWAIT pulse is equal to one HCLK cycle.

Figure 51. Asynchronous multiplexed PSRAM/NOR write waveforms

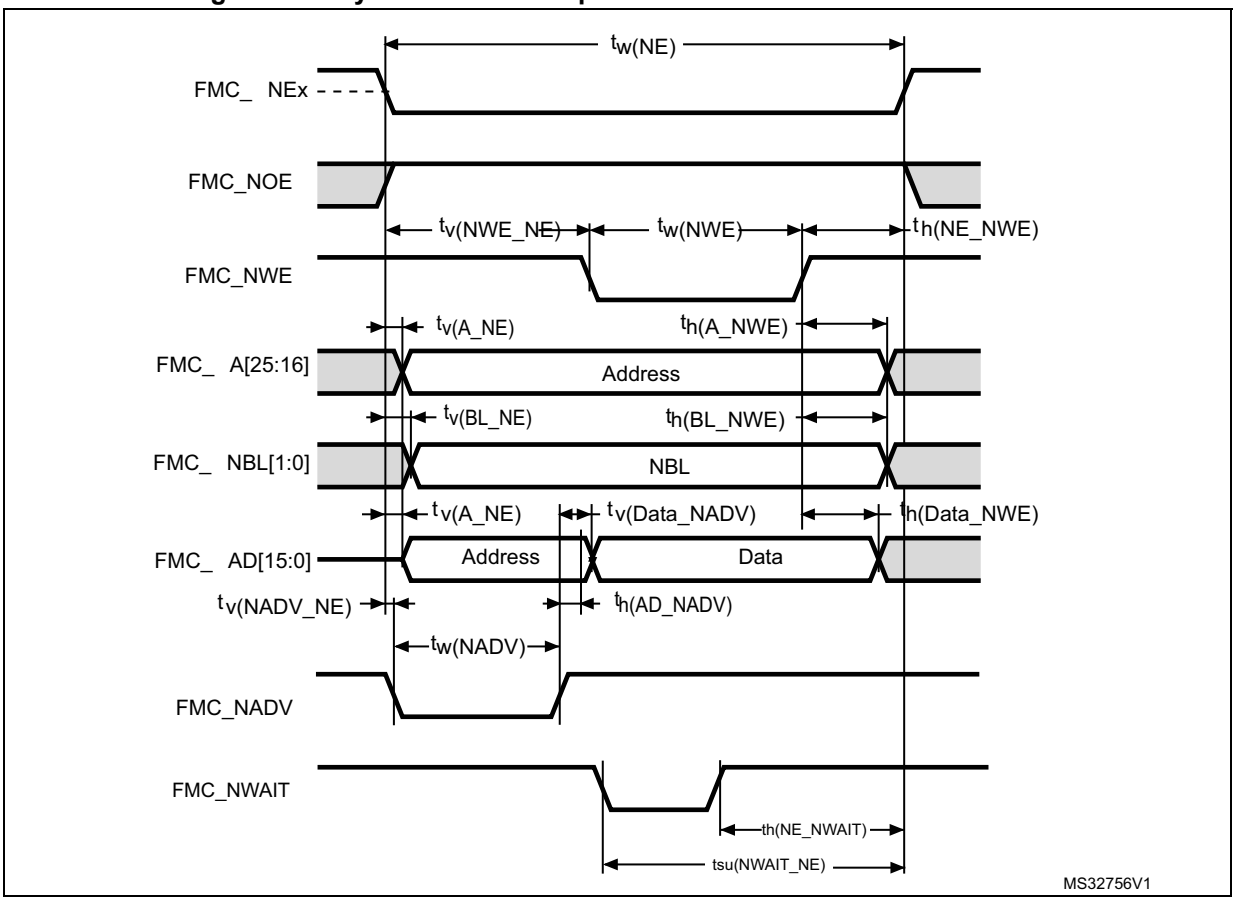

Table 140. Asynchronous multiplexed PSRAM/NOR write timings(1)

Symbol	Parameter	Min	Max	Unit
$t_{w(NE)}$	FMC_NE low time	$3 \times t_{HCLK} - 1$	$3 \times t_{HCLK}$	ns
$t_{v(NWE_NE)}$	FMC_NEx low to FMC_NWE low	$t_{HCLK} - 1$	t_{HCLK}	
$t_{w(NWE)}$	FMC_NWE low time	$2 \times t_{HCLK} - 0.5$	$2 \times t_{HCLK} + 1$	
$t_{h(NE_NWE)}$	FMC_NWE high to FMC_NE high hold time	t_{HCLK}	-	
$t_{v(A_NE)}$	FMC_NEx low to FMC_A valid	-	1	
$t_{v(NADV_NE)}$	FMC_NEx low to FMC_NADV low	0	2	
$t_{w(NADV)}$	FMC_NADV low time	$t_{HCLK} - 0.5$	$t_{HCLK} + 1$	
$t_{h(AD_NADV)}$	FMC_AD(adress) valid hold time after FMC_NADV high)	$t_{HCLK} - 4.5$	-	
$t_{h(A_NWE)}$	Address hold time after FMC_NWE high	$t_{HCLK} - 0.5$	-	
$t_{h(BL_NWE)}$	FMC_BL hold time after FMC_NWE high	$t_{HCLK} - 0.5$	-	
$t_{v(BL_NE)}$	FMC_NEx low to FMC_BL valid	-	0.5	
$t_{v(Data_NADV)}$	FMC_NADV high to Data valid	-	$t_{HCLK} + 2$	
$t_{h(Data_NWE)}$	Data hold time after FMC_NWE high	t_{HCLK}	-	

1. Evaluated by characterization. Not tested in production.

Table 141. Asynchronous multiplexed PSRAM/NOR write-NWAIT timings(1)

Symbol	Parameter	Min	Max	Unit
$t_{w(NE)}$	FMC_NE low time	$8 \times t_{HCLK} - 1$	$8 \times t_{HCLK} + 1$	ns
$t_{w(NWE)}$	FMC_NWE low time	$6 \times t_{HCLK} - 1$	$6 \times t_{HCLK} + 1$	
$t_{su(NWAIT_NE)}$	FMC_NWAIT(2) valid before FMC_NEx high	$5 \times t_{HCLK} + 13$	-	
$t_{h(NE_NWAIT)}$	FMC_NEx hold time after FMC_NWAIT invalid	$4 \times t_{HCLK} + 12$	-	

1. Evaluated by characterization. Not tested in production.
2. NWAIT pulse is equal to one HCLK cycle.

Synchronous waveforms and timings

Figure 52 to *Figure 55* represent synchronous waveforms and *Table 142* to *Table 145* provide the corresponding timings. The results shown in these tables are obtained with the following FMC configuration:

- BurstAccessMode = FMC_BurstAccessMode_Enable
- MemoryType = FMC_MemoryType_CRAM
- WriteBurst = FMC_WriteBurst_Enable
- CLKDivision = 1
- DataLatency = 1 for NOR Flash; DataLatency = 0 for PSRAM

In all timing tables, the T_{HCLK} is the HCLK clock period.

- Maximum FMC_CLK = 80 MHz for 2.7 V ≤ V_{DD} ≤ 3.6 V, with C_L = 15pF and with C_L = 20 pF
- Maximum FMC_CLK = 80 MHz for 1.71 V ≤ V_{DD} ≤ 1.9 V with C_L = 15pF and with C_L = 20 pF

Figure 52. Synchronous multiplexed NOR/PSRAM read timings

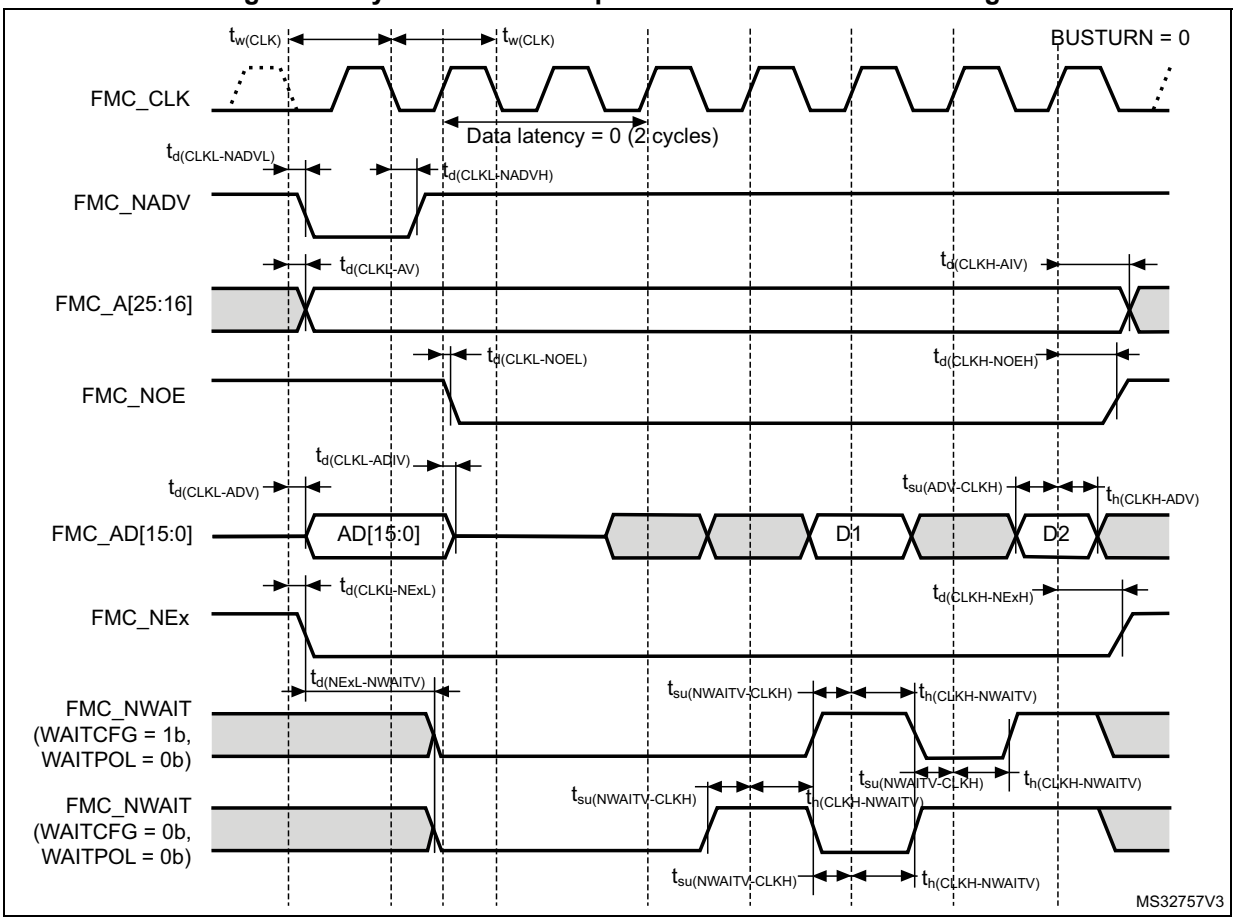

Table 142. Synchronous multiplexed NOR/PSRAM read timings(1)(2)

Symbol	Parameter	Min	Max	Unit
$t_{w(CLK)}$	FMC_CLK period	$2 \times t_{HCLK}$ - 0.5	-	ns
$t_{d(CLKL-NExL)}$	FMC_CLK low to FMC_NEx low (x = 0..2)	-	3	
$t_{d(CLKH_NExH)}$	FMC_CLK high to FMC_NEx high (x = 0..2)	t_{HCLK} - 0.5	-	
$t_{d(CLKL-NADVL)}$	FMC_CLK low to FMC_NADV low	-	2.5	
$t_{d(CLKL-NADVH)}$	FMC_CLK low to FMC_NADV high	2	-	
$t_{d(CLKL-AV)}$	FMC_CLK low to FMC_Ax valid (x = 16..25)	-	2.5	
$t_{d(CLKH-AIV)}$	FMC_CLK high to FMC_Ax invalid (x = 16..25)	t_{HCLK} - 0.5	-	

Table 142. Synchronous multiplexed NOR/PSRAM read timings(1)(2) (continued)

Symbol	Parameter	Min	Max	Unit
$t_{d(CLKL-NOEL)}$	FMC_CLK low to FMC_NOE low	-	1.5	ns
$t_{d(CLKH-NOEH)}$	FMC_CLK high to FMC_NOE high	t_{HCLK} + 1	-	
$t_{d(CLKL-ADV)}$	FMC_CLK low to FMC_AD[15:0] valid	-	2	
$t_{d(CLKL-ADIV)}$	FMC_CLK low to FMC_AD[15:0] invalid	0	-	
$t_{su(ADV-CLKH)}$	FMC_A/D[15:0] valid data before FMC_CLK high	3	-	
$t_{h(CLKH-ADV)}$	FMC_A/D[15:0] valid data after FMC_CLK high	4	-	
$t_{su(NWAIT-CLKH)}$	FMC_NWAIT valid before FMC_CLK high	1	-	
$t_{h(CLKH-NWAIT)}$	FMC_NWAIT valid after FMC_CLK high	2.5	-	

1. Evaluated by characterization. Not tested in production.
2. Clock ratio R = (HCLK period /FMC_CLK period).

Figure 53. Synchronous multiplexed PSRAM write timings

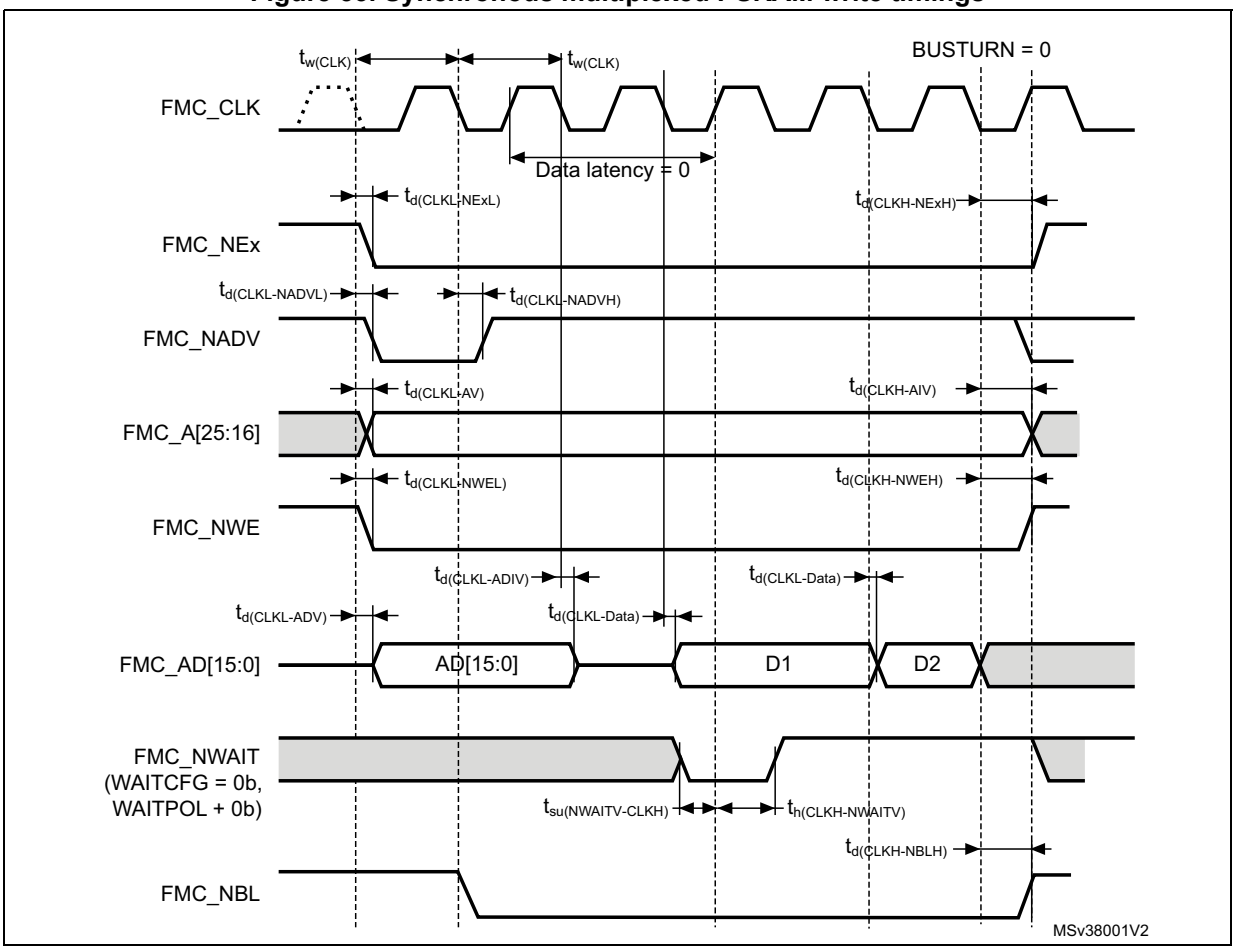

Table 143. Synchronous multiplexed PSRAM write timings[1]

Symbol	Parameter	Min	Max	Unit
$t_{w(CLK)}$	FMC_CLK period, 2.7 V ≤ VDD ≤ 3.6 V	2 × t_{HCLK} - 0.5	-	ns
$t_{d(CLKL-NExL)}$	FMC_CLK low to FMC_NEx low (x = 0..2)	-	2	
$t_{d(CLKH-NExH)}$	FMC_CLK high to FMC_NEx high (x= 0..2)	t_{HCLK} + 1.5	-	
$t_{d(CLKL-NADVL)}$	FMC_CLK low to FMC_NADV low	-	2	
$t_{d(CLKL-NADVH)}$	FMC_CLK low to FMC_NADV high	2	-	
$t_{d(CLKL-AV)}$	FMC_CLK low to FMC_Ax valid (x = 16..25)	-	3	
$t_{d(CLKH-AIV)}$	FMC_CLK high to FMC_Ax invalid (x = 16..25)	t_{HCLK}	-	
$t_{d(CLKL-NWEL)}$	FMC_CLK low to FMC_NWE low	-	2.5	
$t_{d(CLKH-NWEH)}$	FMC_CLK high to FMC_NWE high	t_{HCLK} + 1	-	
$t_{d(CLKL-ADV)}$	FMC_CLK low to FMC_AD[15:0] valid	-	2	
$t_{d(CLKL-ADIV)}$	FMC_CLK low to FMC_AD[15:0] invalid	0	-	
$t_{d(CLKL-DATA)}$	FMC_A/D[15:0] valid data after FMC_CLK low	-	3	
$t_{d(CLKL-NBLL)}$	FMC_CLK low to FMC_NBL low	-	2	
$t_{d(CLKH-NBLH)}$	FMC_CLK high to FMC_NBL high	t_{HCLK} + 0.5	-	
$t_{su(NWAIT-CLKH)}$	FMC_NWAIT valid before FMC_CLK high	3	-	
$t_{h(CLKH-NWAIT)}$	FMC_NWAIT valid after FMC_CLK high	2.5	-	

1. Evaluated by characterization. Not tested in production.

Figure 54. Synchronous non-multiplexed NOR/PSRAM read timings

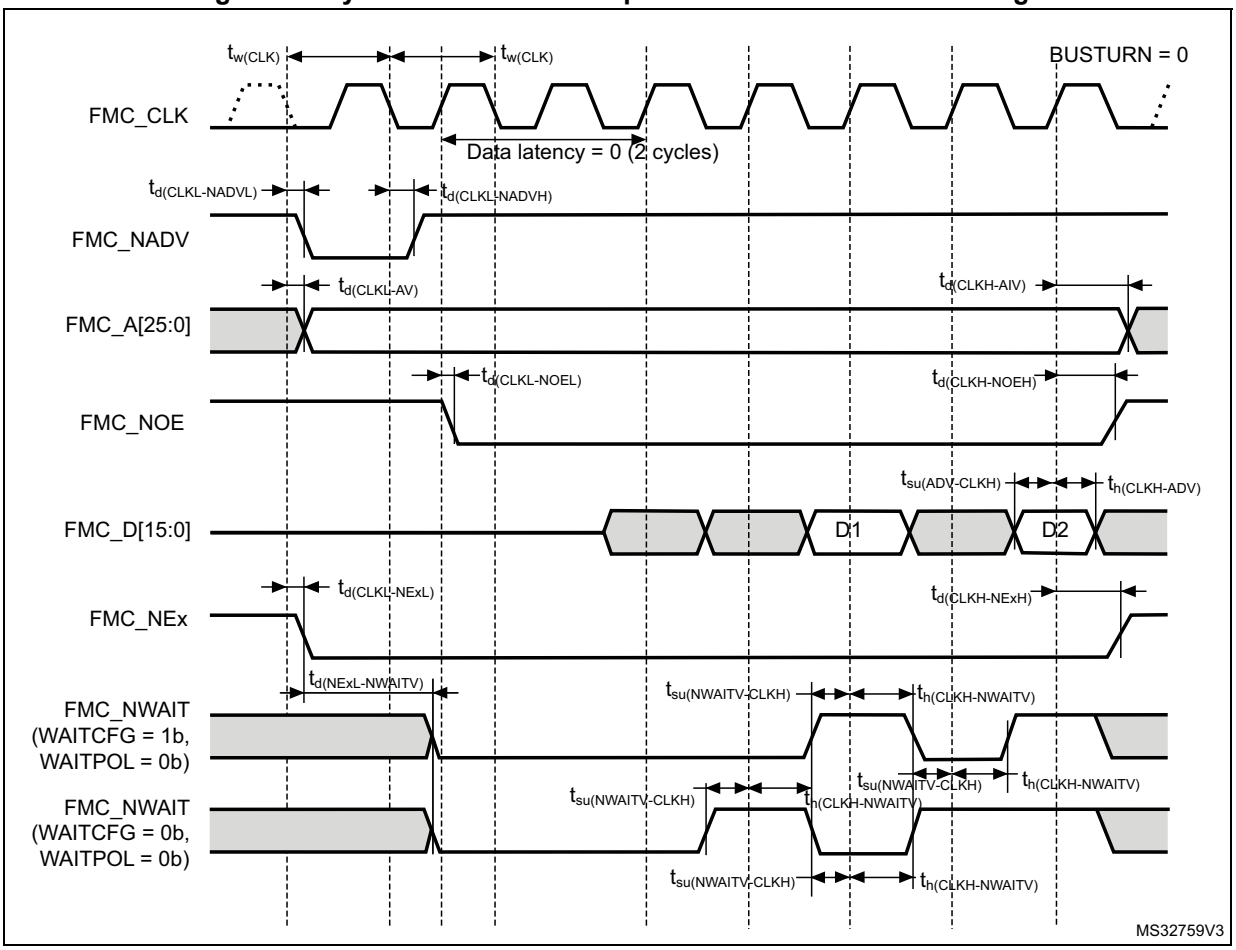

Table 144. Synchronous non-multiplexed NOR/PSRAM read timings(1)

Symbol	Parameter	Min	Max	Unit
$t_{w(CLK)}$	FMC_CLK period	2 × t_{HCLK} - 0.5	-	ns
$t_{d(CLKL-NExL)}$	FMC_CLK low to FMC_NEx low (x=0..2)	-	3	
$t_{d(CLKH-NExH)}$	FMC_CLK high to FMC_NEx high (x= 0…2)	t_{HCLK} - 0.5	-	
$t_{d(CLKL-NADVL)}$	FMC_CLK low to FMC_NADV low	-	2.5	
$t_{d(CLKL-NADVH)}$	FMC_CLK low to FMC_NADV high	2	-	
$t_{d(CLKL-AV)}$	FMC_CLK low to FMC_Ax valid (x=0…25)	-	2.5	
$t_{d(CLKH-AIV)}$	FMC_CLK high to FMC_Ax invalid (x=0…25)	t_{HCLK} - 0.5	-	
$t_{d(CLKL-NOEL)}$	FMC_CLK low to FMC_NOE low	-	1.5	
$t_{d(CLKH-NOEH)}$	FMC_CLK high to FMC_NOE high	t_{HCLK} + 1	-	
$t_{su(DV-CLKH)}$	FMC_D[15:0] valid data before FMC_CLK high	4	-	
$t_{h(CLKH-DV)}$	FMC_D[15:0] valid data after FMC_CLK high	4	-	
$t_{su(NWAIT-CLKH)}$	FMC_NWAIT valid before FMC_CLK high	1	-	
$t_{h(CLKH-NWAIT)}$	FMC_NWAIT valid after FMC_CLK high	2.5	-	

1. Evaluated by characterization. Not tested in production.

Figure 55. Synchronous non-multiplexed PSRAM write timings

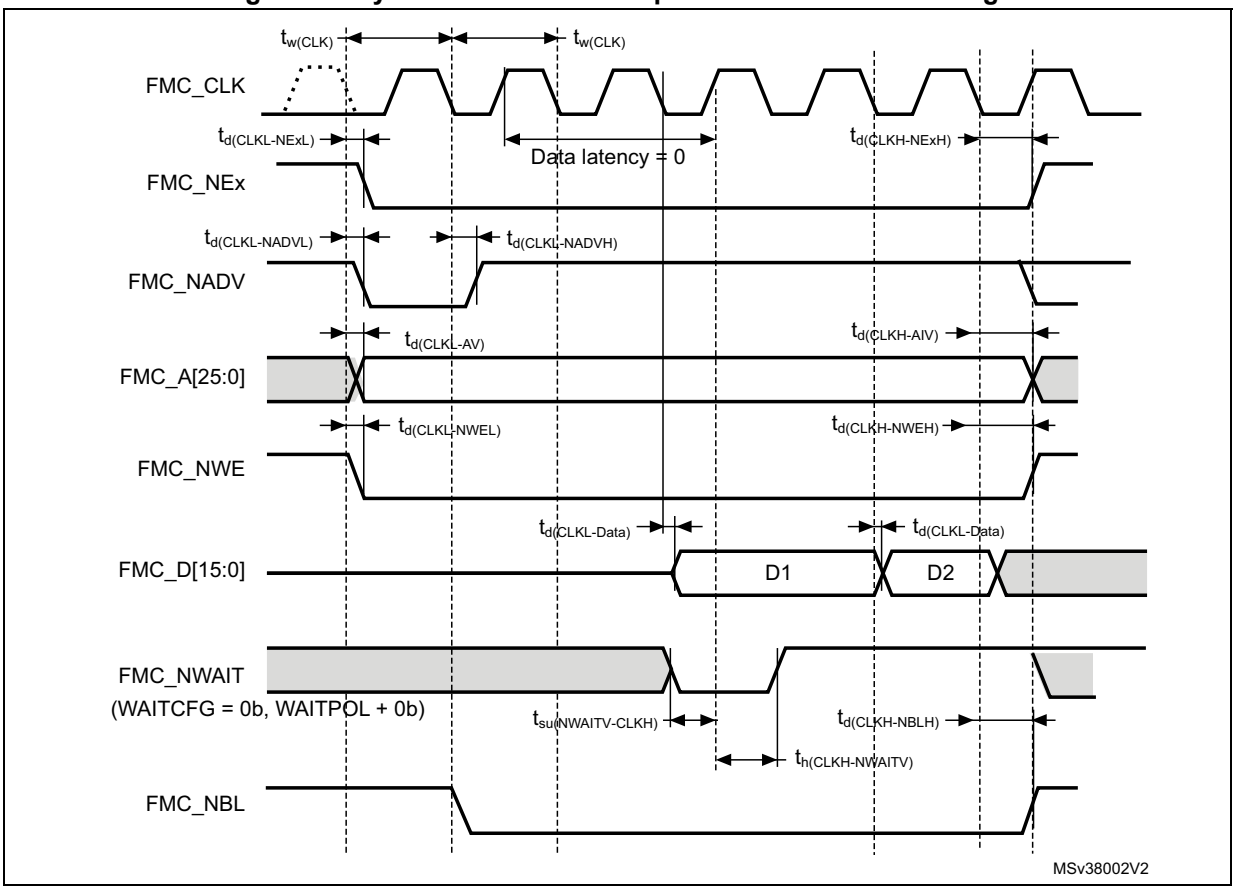

Table 145. Synchronous non-multiplexed PSRAM write timings[1]

Symbol	Parameter	Min	Max	Unit
$t_{w(CLK)}$	FMC_CLK period	$2 \times t_{HCLK}$ - 0.5	-	ns
$t_{d(CLKL-NExL)}$	FMC_CLK low to FMC_NEx low (x = 0..2)	-	3	
$t_{d(CLKH-NExH)}$	FMC_CLK high to FMC_NEx high (x = 0..2)	t_{HCLK} + 1.5	-	
$t_{d(CLKL-NADVL)}$	FMC_CLK low to FMC_NADV low	-	2	
$t_{d(CLKL-NADVH)}$	FMC_CLK low to FMC_NADV high	2	-	
$t_{d(CLKL-AV)}$	FMC_CLK low to FMC_Ax valid (x = 16..25)	-	3	
$t_{d(CLKH-AIV)}$	FMC_CLK high to FMC_Ax invalid (x = 16..25)	t_{HCLK}	-	
$t_{d(CLKL-NWEL)}$	FMC_CLK low to FMC_NWE low	-	2.5	
$t_{d(CLKH-NWEH)}$	FMC_CLK high to FMC_NWE high	t_{HCLK} + 1	-	
$t_{d(CLKL-Data)}$	FMC_D[15:0] valid data after FMC_CLK low	-	3	
$t_{d(CLKL-NBLL)}$	FMC_CLK low to FMC_NBL low	-	2	
$t_{d(CLKH-NBLH)}$	FMC_CLK high to FMC_NBL high	t_{HCLK} + 0.5	-	
$t_{su(NWAIT-CLKH)}$	FMC_NWAIT valid before FMC_CLK high	3	-	ns
$t_{h(CLKH-NWAIT)}$	FMC_NWAIT valid after FMC_CLK high	2.5	-	

1. Evaluated by characterization. Not tested in production.

NAND controller waveforms and timings

Figure 56 to *Figure 59* represent synchronous waveforms, and *Table 146*/*Table 147* provide the corresponding timings. The results shown in these tables are obtained with the following FMC configuration:

- COM.FMC_SetupTime = 0x01
- COM.FMC_WaitSetupTime = 0x03
- COM.FMC_HoldSetupTime = 0x02
- COM.FMC_HiZSetupTime = 0x01
- ATT.FMC_SetupTime = 0x01
- ATT.FMC_WaitSetupTime = 0x03
- ATT.FMC_HoldSetupTime = 0x02
- ATT.FMC_HiZSetupTime = 0x01
- Bank = FMC_Bank_NAND
- MemoryDataWidth = FMC_MemoryDataWidth_16b
- ECC = FMC_ECC_Enable
- ECCPageSize = FMC_ECCPageSize_512Bytes
- TCLRSetupTime = 0
- TARSetupTime = 0

In all timing tables, the T_{HCLK} is the HCLK clock period.

Figure 56. NAND controller waveforms for read access

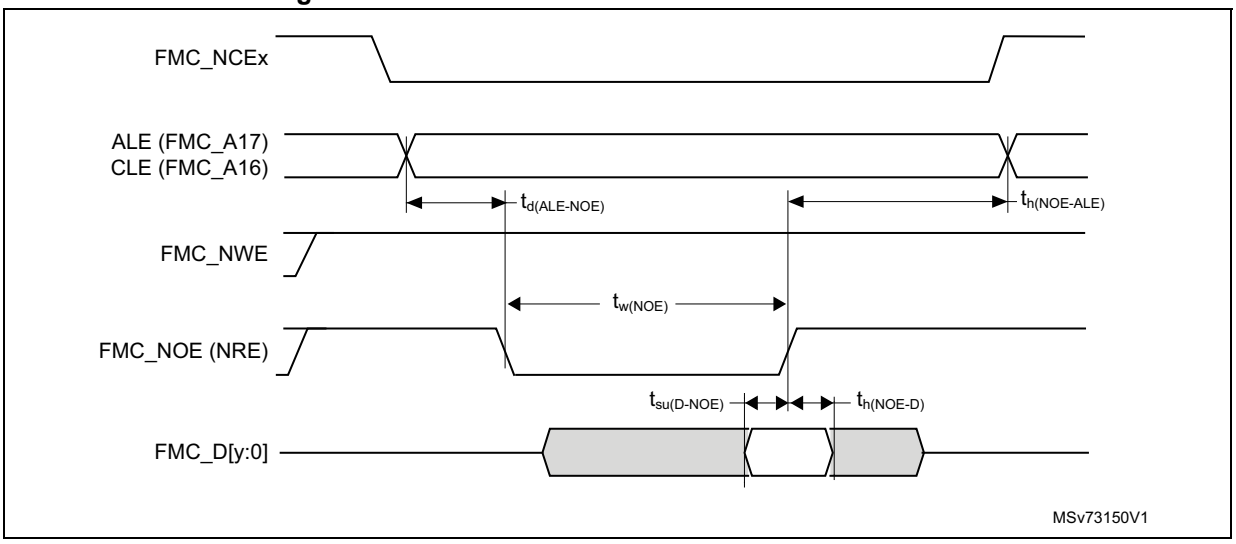

1. y = 7 or 15 depending on the NAND flash memory interface.

Figure 57. NAND controller waveforms for write access

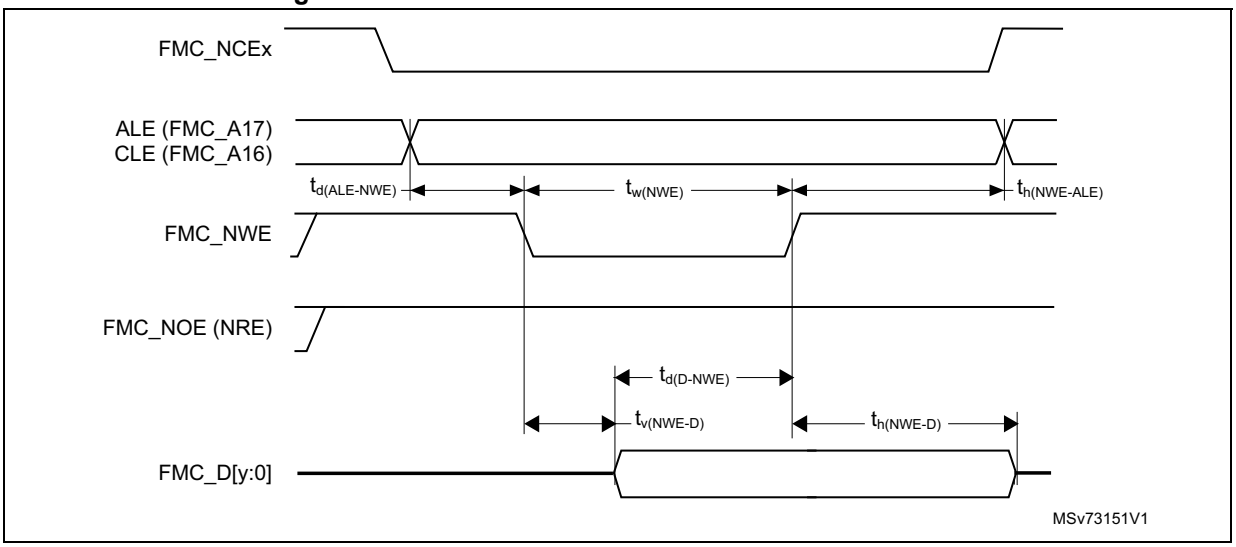

1. y = 7 or 15 depending on the NAND flash memory interface.

Figure 58. NAND controller waveforms for common memory read access

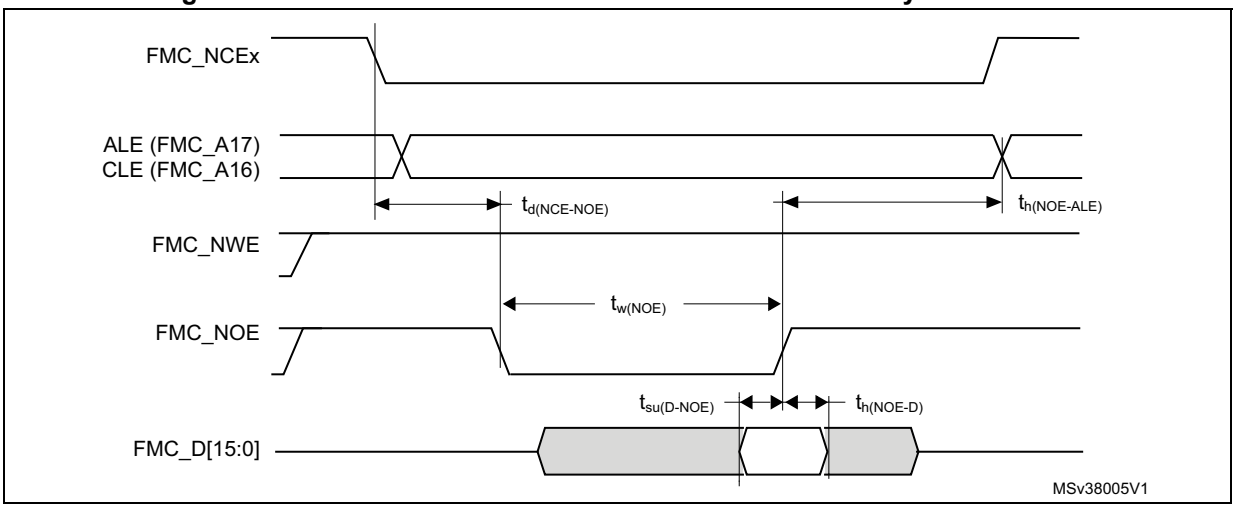

Figure 59. NAND controller waveforms for common memory write access

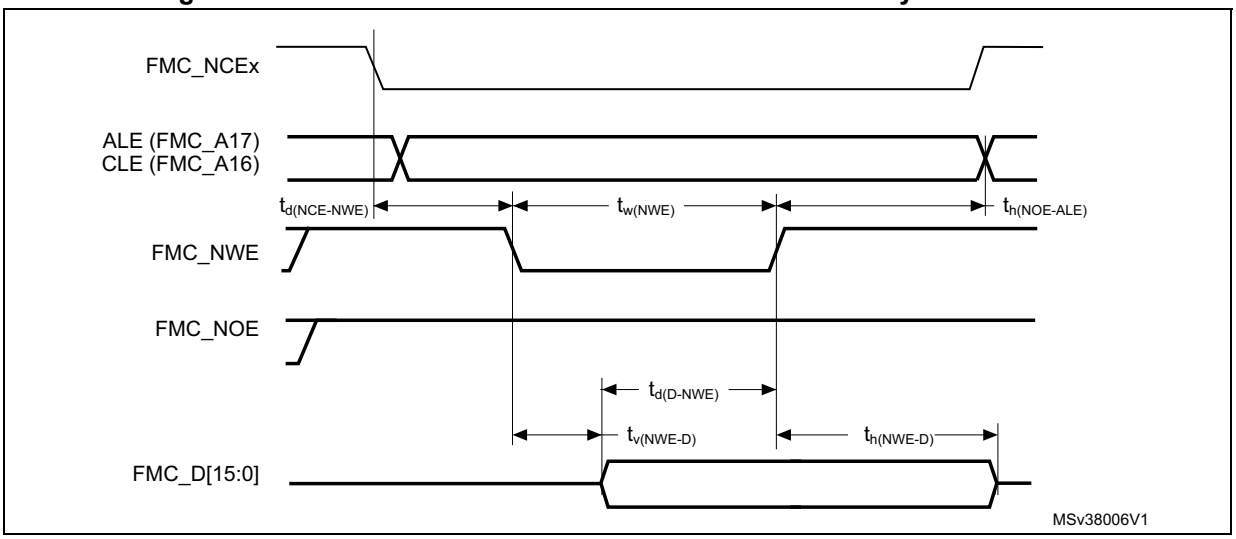

Table 146. Switching characteristics for NAND Flash read cycles(1)

Symbol	Parameter	Min	Max	Unit
$t_{w(NOE)}$	FMC_NOE low width	$4 \times t_{HCLK} - 0.5$	$4 \times t_{HCLK} + 0.5$	ns
$t_{su(D-NOE)}$	FMC_D[15-0] valid data before FMC_NOE high	13	-	
$t_{h(NOE-D)}$	FMC_D[15-0] valid data after FMC_NOE high	0	-	
$t_{d(ALE-NOE)}$	FMC_ALE valid before FMC_NOE low	-	$3 \times t_{HCLK} + 0.5$	
$t_{h(NOE-ALE)}$	FMC_NWE high to FMC_ALE invalid	$4 \times t_{HCLK} - 1$	-	

1. Evaluated by characterization. Not tested in production.

Table 147. Switching characteristics for NAND Flash write cycles(1)

Symbol	Parameter	Min	Max	Unit
$t_{w(NWE)}$	FMC_NWE low width	$4 \times t_{HCLK} - 0.5$	$4 \times t_{HCLK} + 0.5$	ns
$t_{v(NWE-D)}$	FMC_NWE low to FMC_D[15-0] valid	0	-	
$t_{h(NWE-D)}$	FMC_NWE high to FMC_D[15-0] invalid	$2 \times t_{HCLK} + 1$	-	
$t_{d(D-NWE)}$	FMC_D[15-0] valid before FMC_NWE high	$5 \times t_{HCLK} - 5$	-	
$t_{d(ALE_NWE)}$	FMC_ALE valid before FMC_NWE low	-	$3 \times t_{HCLK} + 0.5$	
$t_{h(NWE-ALE)}$	FMC_NWE high to FMC_ALE invalid	$2 \times t_{HCLK} - 0.5$	-	

1. Evaluated by characterization. Not tested in production.

5.3.36 OCTOSPI characteristics

Unless otherwise specified, the parameters given in *Table 148* to *Table 150* are derived from tests performed under the ambient temperature, f_{AHB} frequency and V_{DD} supply voltage conditions summarized in *Table 33*, with the following configuration:

- Output speed set to OSPEEDRy[1:0] = 10, unless otherwise specified
- Delay block enabled for DTR (with DQS)/HyperBus
- Measurement points done at $0.5 \times V_{DD}$ level
- I/O compensation cell activated
- HSLV activated when $V_{DD} \leq 2.7$ V
- Voltage scaling range 1 unless otherwise specified

Refer to *Section 5.3.15: I/O port characteristics* for more details on the input/output alternate function characteristics.

Table 148. OCTOSPI characteristics in SDR mode(1)(2)(3)

Symbol	Parameter	Conditions	Min	Typ	Max	Unit
$f_{(CLK)}$	OCTOSPI clock frequency	$1.71 \text{ V} \leq V_{DD} \leq 3.6$ V Voltage range 1 $C_L = 15$ pF	-	-	93	MHz
		$2.7 \text{ V} \leq V_{DD} \leq 3.6$ V Voltage range 1 $C_L = 15$ pF	-	-	100	
		$1.71 \text{ V} \leq V_{DD} \leq 3.6$ V Voltage range 4 $C_L = 15$ pF	-	-	25	

Table 148. OCTOSPI characteristics in SDR mode(1)(2)(3) (continued)

Symbol	Parameter	Conditions	Min	Typ	Max	Unit
$t_{w(CLKH)}$	OCTOSPI clock high and low time (even division)	PRESCALER[7:0] = n (n = 0 1, 3, 5,..255)	$t_{(CLK)}/2$ - 0.5	-	$t_{(CLK)}/2$	ns
$t_{w(CLKL)}$			$t_{(CLK)}/2$ - 0.5	-	$t_{(CLK)}/2$	
$t_{w(CLKH)}$	OCTOSPI clock high and low time (odd division)	PRESCALER[7:0] = n (n = 2, 4, 6,..254)	(n/2) × $t_{(CLK)}$ /(n+1) - 0.5	-	(n/2) × $t_{(CLK)}$ /(n+1)	
$t_{w(CLKL)}$			((n/2)+1) × $t_{(CLK)}$ /(n+1) - 0.5	-	((n/2)+1) × $t_{(CLK)}$ /(n+1)	
$t_{s(IN)}$	Data input setup time	Voltage range 1	2.5	-	-	
		Voltage range 4	6	-	-	
$t_{h(IN)}$	Data input hold time	Voltage range 1	0.5	-	-	
		Voltage range 4	1	-	-	
$t_{v(OUT)}$	Data output valid time	Voltage range 1	-	0.5	1	
		Voltage range 4	-	1.5	2.5	
$t_{h(OUT)}$	Data output hold time	Voltage range 1	-0.5	-	-	
		Voltage range 4	-0.25	-	-	

1. Evaluated by characterization. Not tested in production.
2. Measured values in this table apply to Octo- and Quad-SPI data modes.
3. Delay block bypassed.

Table 149. OCTOSPI characteristics in DTR mode (no DQS)(1)(2)(3)

Symbol	Parameter	Conditions	Min	Typ	Max	Unit
$f_{(CLK)}$	OCTOSPI clock frequency	1.71 V ≤ V_{DD} ≤ 3.6 V Voltage range 1 C_L = 15 pF	-	-	93(4)	MHz
		2.7 V ≤ V_{DD} ≤ 3.6 V Voltage range 1 C_L = 15 pF	-	-	100(4)	
		1.71 V ≤ V_{DD} ≤ 3.6 V Voltage range 4, C_L = 15 pF	-	-	25(4)	

Table 149. OCTOSPI characteristics in DTR mode (no DQS)(1)(2)(3) (continued)

Symbol	Parameter	Conditions	Min	Typ	Max	Unit
$t_{w(CLKH)}$	OCTOSPI clock high and low time (even division)	PRESCALER[7:0] = n (n = 0 1, 3, 5,..255)	$t_{(CLK)}/2$ - 0.5	-	$t_{(CLK)}/2$ + 0.5	ns
$t_{w(CLKL)}$			$t_{(CLK)}/2$ - 0.5	-	$t_{(CLK)}/2$ + 0.5	
$t_{w(CLKH)}$	OCTOSPI clock high and low time (odd division)	PRESCALER[7:0] = n (n = 2, 4, 6,..254)	(n/2) × $t_{(CLK)}$ /(n+1) - 0.5	-	(n/2) × $t_{(CLK)}$ /(n+1) + 0.5	
$t_{w(CLKL)}$			((n/2)+1) × $t_{(CLK)}$ /(n+1) - 0.5	-	((n/2)+1) × $t_{(CLK)}$ /(n+1) + 0.5	
$t_{sr(IN)}$ $t_{sf(IN)}$	Data input setup time	Voltage range 1	3.25	-	-	
		Voltage range 4	3.75	-	-	
$t_{hr(IN)}$ $t_{hf(IN)}$	Data input hold time	Voltage range 1	1	-	-	
		Voltage range 4	1.5	-	-	
$t_{vr(OUT)}$ $t_{vf(OUT)}$	Data output valid time, DHQC = 0	Voltage range 1	-	6	9.25	
		Voltage range 4	-	13.25	19.75	
	Data output valid time, DHQC = 1	Voltage range 1 All prescaler values (except 0)	-	$t_{(CLK)}/4$ + 0.75	$t_{(CLK)}/4$ + 1.5	
$t_{hr(OUT)}$ $t_{hf(OUT)}$	Data output hold time DHQC = 0	Voltage range 1	4	-	-	
		Voltage range 4	8	-	-	
	Data output hold time DHQC = 1	Voltage range 1 All prescaler values (except 0)	$t_{(CLK)}/4$ - 0.5	-	-	

1. Evaluated by characterization. Not tested in production.
2. Measured values in this table apply to Octo- and Quad-SPI data modes.
3. Delay block bypassed.
4. Activating DHQC is mandatory to reach this frequency.

Table 150. OCTOSPI characteristics in DTR mode (with DQS)/HyperBus(1)(2)

Symbol	Parameter	Conditions	Min	Typ	Max	Unit
$f_{(CLK)}$	OCTOSPI clock frequency	1.71 V ≤ V_{DD} ≤ 3.6 V Voltage range 1 C_L = 15 pF	-	-	93(3)(4)	MHz
		2.7 V ≤ V_{DD} ≤ 3.6 V Voltage range 1 C_L = 15 pF	-	-	100(3)(4)	
		1.71 V ≤ V_{DD} ≤ 3.6 V Voltage range 4 C_L = 15 pF	-	-	25(4)	

Table 150. OCTOSPI characteristics in DTR mode (with DQS)/HyperBus(1)(2) (continued)

Symbol	Parameter	Conditions	Min	Typ	Max	Unit
$t_{w(CLKH)}$	OCTOSPI clock high and low time (even division)	PRESCALER[7:0] = n (n = 0 1, 3, 5,..255)	$t_{(CLK)}/2$ - 0.5	-	$t_{(CLK)}/2$ + 0.5	ns
$t_{w(CLKL)}$			$t_{(CLK)}/2$ - 0.5	-	$t_{(CLK)}/2$ + 0.5	
$t_{w(CLKH)}$	OCTOSPI clock high and low time (odd division)	PRESCALER[7:0] = n (n = 2, 4, 6,..254)	(n/2) × $t_{(CLK)}$ /(n+1) - 0.5	-	(n/2) × $t_{(CLK)}$ /(n+1) + 0.5	
$t_{w(CLKL)}$			((n/2)+1) × $t_{(CLK)}$ /(n+1) - 0.5	-	((n/2)+1) × $t_{(CLK)}$ /(n+1) + 0.5	
$t_{v(CLK)}$	Clock valid time	-	-	-	$t_{(CLK)}$ + 2	
$t_{h(CLK)}$	Clock hold time	-	$t_{(CLK)}/2$ - 0.5	-	-	
$V_{ODr(CLK)}$ (5)	CLK, NCLK crossing level on CLK rising edge	V_{DD} = 1.8 V	845	-	1098	mV
$V_{ODf(CLK)}$ (5)	CLK, NCLK crossing level on CLK falling edge	V_{DD} = 1.8 V	725	-	1055	
$t_{w(CS)}$	Chip select high time	-	3 × $t_{(CLK)}$	-	-	ns
$t_{v(DQ)}$	Data input valid time	-	0	-	-	
$t_{v(DS)}$	Data strobe input valid time	-	0	-	-	
$t_{h(DS)}$	Data strobe input hold time	-	0	-	-	
$t_{v(RWDS)}$	Data strobe output valid time	-	-	-	3 × $t_{(CLK)}$	
$t_{sr(DQ)}$ $t_{sf(DQ)}$	Data input setup time	Voltage range 1	-0.25	-	-	
		Voltage range 4	0	-	-	
$t_{hr(DQ)}$ $t_{hf(DQ)}$	Data input hold time	Voltage range 1	1.25	-	-	
		Voltage range 4	1.75	-	-	
$t_{vr(OUT)}$ $t_{vf(OUT)}$	Data output valid time DHQC = 0	Voltage range 1	-	6	9.5	
		Voltage range 4	-	13	19.5	
	Data output valid time DHQC = 1	Voltage range 1 All prescaler values (except 0)	-	$t_{(CLK)}/4$ + 0.5	$t_{(CLK)}/4$ + 1.25	
$t_{hr(OUT)}$ $t_{hf(OUT)}$	Data output hold time DHQC = 0	Voltage range 1	4	-	-	
		Voltage range 4	7.75	-	-	
$t_{hr(OUT)}$	Data output hold time DHQC = 1	Voltage range 1 All prescaler values (except 0)	$t_{(CLK)}/4$ - 0.5	-	-	

1. Evaluated by characterization. Not tested in production.
2. Delay block activated.

3. Maximum frequency values are given for a RWDS to DQ skew of maximum ±1.0 ns.
4. Activating DHQC is mandatory to reach this frequency.
5. Crossing results are in line with specification, except for PA3/PB5 CLK that exceed slightly the specification.

Figure 60. OCTOSPI timing diagram - SDR mode

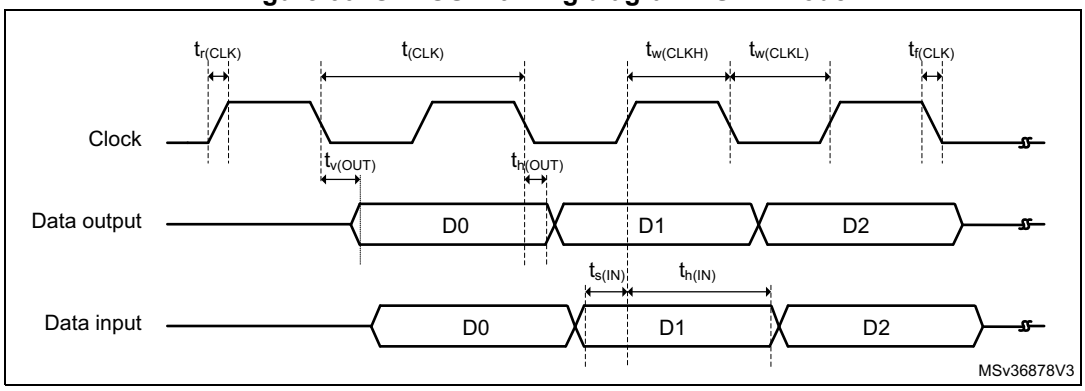

Figure 61. OCTOSPI timing diagram - DDR mode

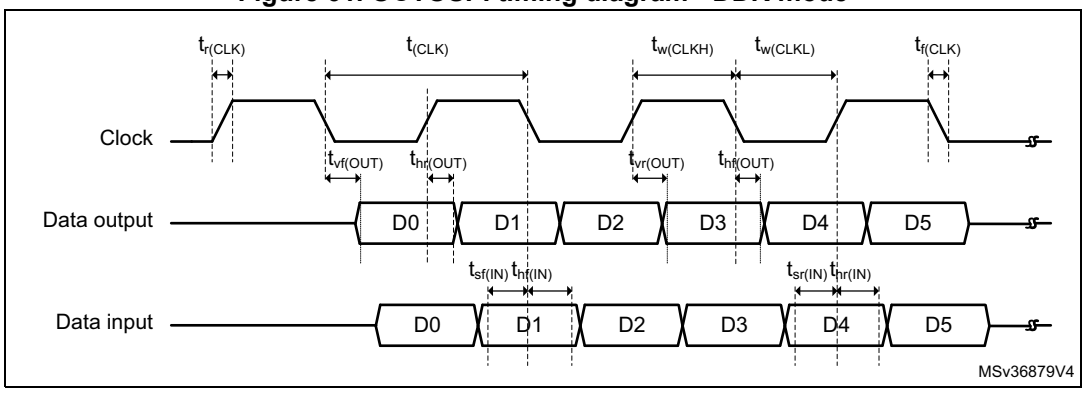

Figure 62. OCTOSPI HyperBus clock

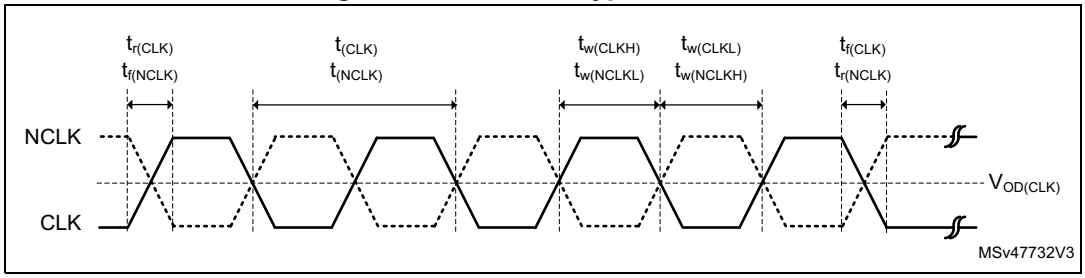

Figure 63. OCTOSPI HyperBus read

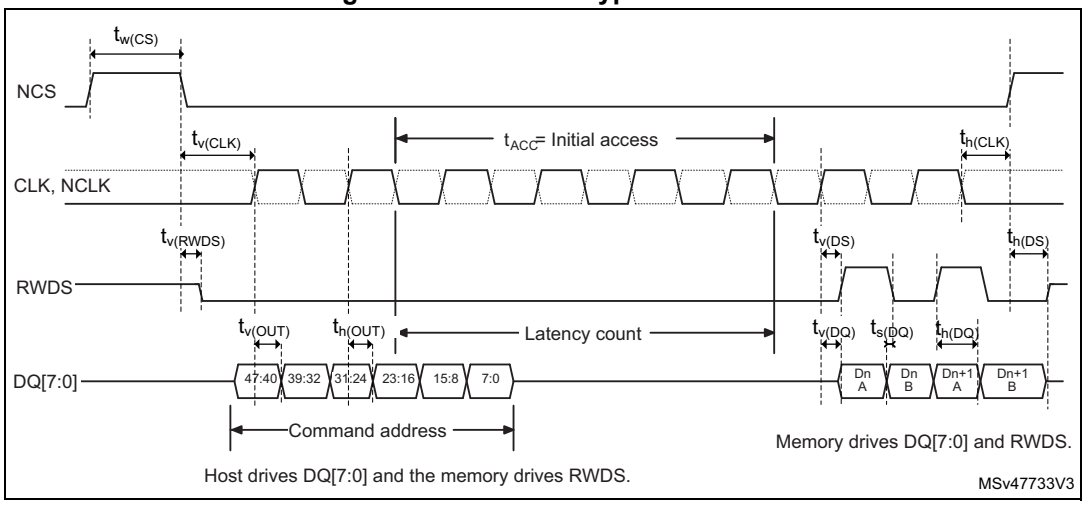

Figure 64. OCTOSPI HyperBus read with double latency

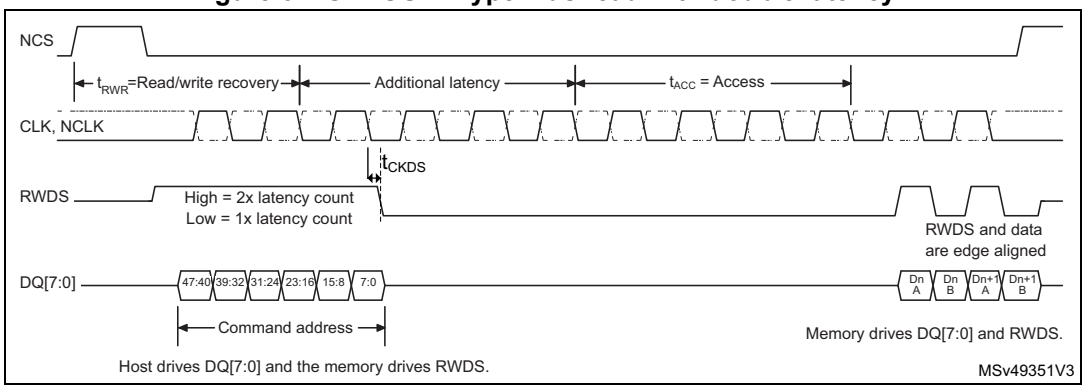

Figure 65. OCTOSPI HyperBus write

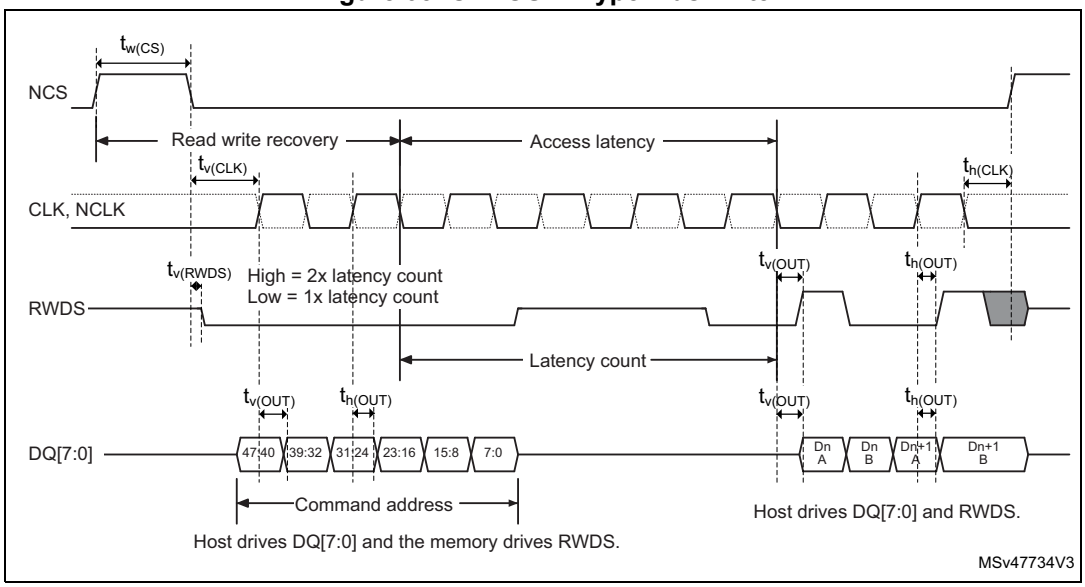

5.3.37 HSPI characteristics

Unless otherwise specified, the parameters given in the table below are derived from tests performed under the ambient temperature, f_{AHB} frequency and V_{DD} supply voltage conditions summarized in *Table 33*, with the following configuration:

- Output speed set to OSPEEDRy[1:0] = 11
- Measurement points done at 0.5 × V_{DD} level
- I/O compensation cell activated
- HSLV activated when V_{DD} ≤ 2.7 V
- Voltage scaling range 1 unless otherwise specified

Refer to *Section 5.3.15: I/O port characteristics* for more details on the input/output alternate function characteristics.

Table 151. HSPI characteristics in SDR mode(1)

Symbol	Parameter	Conditions	Min	Typ	Max	Unit
$f_{(CLK)}$	HSPI clock frequency	1.71 V ≤ V_{DD} ≤ 3.6 V Voltage range 1 C_L = 15 pF	-	-	160	MHz
		1.71 V ≤ V_{DD} ≤ 3.6 V Voltage range 4 C_L = 15 pF	-	-	25	
$t_{w(CLKH)}$	HSPI clock high and low time (even division)	PRESCALER[7:0] = n (n = 0, 1, 3, 5,..255)	$t_{(CLK)}/2$ - 0.5	-	$t_{(CLK)}/2$	ns
$t_{w(CLKL)}$			$t_{(CLK)}/2$ - 0.5	-	$t_{(CLK)}/2$	
$t_{w(CLKH)}$	HSPI clock high and low time (odd division)	PRESCALER[7:0] = n (n = 2, 4, 6,..254)	(n/2) × $t_{(CLK)}$ /(n+1) - 0.5	-	(n/2) × $t_{(CLK)}$ /(n+1)	
$t_{w(CLKL)}$			((n/2)+1) × $t_{(CLK)}$ /(n+1) - 0.5	-	((n/2)+1) × $t_{(CLK)}$ /(n+1)	
$t_{s(IN)}$	Data input setup time	Voltage range 1	2	-	-	
		Voltage range 4	2.5	-	-	
$t_{h(IN)}$	Data input hold time	Voltage range 1	0	-	-	
		Voltage range 4	0.5	-	-	
$t_{v(OUT)}$	Data output valid time	Voltage range 1	-	0.5	1	
		Voltage range 4	-	1.5	2.5	
$t_{h(OUT)}$	Data output hold time	Voltage range 1	0	-	-	
		Voltage range 4	1	-	-	

1. Evaluated by characterization. Not tested in production.

Table 152. HSPI characteristics in DTR mode (no DQS)(1)

Symbol	Parameter	Conditions	Min	Typ	Max	Unit
$f_{(CLK)}$	HSPI clock frequency	1.71 V ≤ V_{DD} ≤ 3.6 V Voltage range 1 C_L = 15 pF	-	-	160	MHz
		1.71 V ≤ V_{DD} ≤ 3.6 V Voltage range 4, C_L = 15 pF	-	-	25	
$t_{w(CLKH)}$	HSPI clock high and low time (even division)	PRESCALER[7:0] = n (n = 0, 1, 3, 5,..255)	$t_{(CLK)}/2$ - 0.5	-	$t_{(CLK)}/2$ + 0.5	ns
$t_{w(CLKL)}$			$t_{(CLK)}/2$ - 0.5	-	$t_{(CLK)}/2$ + 0.5	
$t_{w(CLKH)}$	HSPI clock high and low time (odd division)	PRESCALER[7:0] = n (n = 2, 4, 6,..254)	(n/2) × $t_{(CLK)}$ /(n+1) - 0.5	-	(n/2) × $t_{(CLK)}$ /(n+1) + 0.5	
$t_{w(CLKL)}$			((n/2)+1) × $t_{(CLK)}$ /(n+1) - 0.5	-	((n/2)+1) × $t_{(CLK)}$ /(n+1) + 0.5	
$t_{sr(IN)}$ $t_{sf(IN)}$	Data input setup time	Voltage range 1	2	-	-	
		Voltage range 4	3	-	-	
$t_{hr(IN)}$ $t_{hf(IN)}$	Data input hold time	Voltage range 1	0.5	-	-	
		Voltage range 4	1	-	-	
$t_{vr(OUT)}$ $t_{vf(OUT)}$	Data output valid time	Voltage range 1	-	$t_{(CLK)}/4$ + 0.5	$t_{(CLK)}/4$ + 1.5	
		Voltage range 1 (prescaler = 0) with F(CLK) < 50 MHz	-	5.5	6.5	
		Voltage range 4	-	$t_{(CLK)}/4$ + 0.75	$t_{(CLK)}/4$ + 3	
$t_{hr(OUT)}$ $t_{hf(OUT)}$	Data output hold time	Voltage range 1	$t_{(CLK)}/4$ - 1	-	-	
		Voltage range 1 (prescaler = 0) with F(CLK) < 50 MHz	4.75	-	-	
		Voltage range 4	$t_{(CLK)}/4$ - 2	-	-	

1. Evaluated by characterization. Not tested in production.

Table 153. HSPI characteristics in DTR mode (with DQS)/HyperBus(1)

Symbol	Parameter	Conditions	Min	Typ	Max	Unit
$f_{(CLK)}$	HSPI clock frequency	1.71 V ≤ V_{DD} ≤ 3.6 V Voltage range 1 C_L = 15 pF	-	-	160	MHz
		1.71 V ≤ V_{DD} ≤ 3.6 V Voltage range 4 C_L = 15 pF	-	-	25	
$t_{w(CLKH)}$	HSPI clock high and low time (even division)	PRESCALER[7:0] = n (n = 0, 1, 3, 5,..255)	$t_{(CLK)}/2$ - 0.5	-	$t_{(CLK)}/2$ + 0.5	ns
$t_{w(CLKL)}$			$t_{(CLK)}/2$ - 0.5	-	$t_{(CLK)}/2$ + 0.5	

Table 153. HSPI characteristics in DTR mode (with DQS)/HyperBus(1) (continued)

Symbol	Parameter	Conditions	Min	Typ	Max	Unit
$t_{w(CLKH)}$	HSPI clock high and low time (odd division)	PRESCALER[7:0] = n (n = 2, 4, 6,..254)	(n/2) × $t_{(CLK)}$ /(n+1) - 0.5	-	(n/2) × $t_{(CLK)}$ /(n+1) + 0.5	ns
$t_{w(CLKL)}$			((n/2)+1) × $t_{(CLK)}$ /(n+1) - 0.5	-	((n/2)+1) × $t_{(CLK)}$ /(n+1) + 0.5	
$t_{v(CLK)}$	Clock valid time	-	-	-	$t_{(CLK)}$ - 1.5	
$t_{h(CLK)}$	Clock hold time	-	$t_{(CLK)}$/2 + 1	-	-	
$V_{ODr(CLK)}$	CLK, NCLK crossing level on CLK rising edge	V_{DD} = 1.8 V	860	-	890	mV
$V_{ODf(CLK)}$	CLK, NCLK crossing level on CLK falling edge	V_{DD} = 1.8 V	720	-	740	
$t_{v(DQ)}$	Data input valid time	-	0	-	-	ns
$t_{v(DS)}$	Data strobe input valid time	-	0	-	-	
$t_{h(DS)}$	Data strobe input hold time	-	0	-	-	
$t_{v(RWDS)}$	Data strobe output valid time	-	-	-	$t_{(CLK)}$	
$t_{sr(DQ)}$ $t_{sf(DQ)}$	Data input setup time	Voltage range 1	1 - $t_{(CLK)}$/4	-	-	
		Voltage Range 1, (prescaler = 0) with F(CLK) < 50 MHz	- 6.5	-	-	
		Voltage range 4	0	-	-	
$t_{hr(DQ)}$ $t_{hf(DQ)}$	Data input hold time	Voltage range 1	0.5 + $t_{(CLK)}$/4	-	-	
		Voltage Range 1, (prescaler = 0) with F(CLK) < 50 MHz	6	-	-	
		Voltage range 4	11.5	-	-	
$t_{vr(OUT)}$ $t_{vf(OUT)}$	Data output valid time	Voltage range 1	-	$t_{(CLK)}$/4 + 0.5	$t_{(CLK)}$/4 + 1.5	
		Voltage Range 1, (prescaler = 0) with F(CLK) < 50 MHz	-	5	6.5	
		Voltage range 4	-	$t_{(CLK)}$/4 + 0.75	$t_{(CLK)}$/4 + 3	
$t_{hr(OUT)}$ $t_{hf(OUT)}$	Data output hold time	Voltage range 1	$t_{(CLK)}$/4 - 1	-	-	
		Voltage Range 1, (prescaler = 0) with F(CLK) < 50 MHz	4.75	-	-	
		Voltage range 4	$t_{(CLK)}$/4 - 2	-	-	

1. Evaluated by characterization. Not tested in production.

Figure 66. HSPI timing diagram - SDR mode

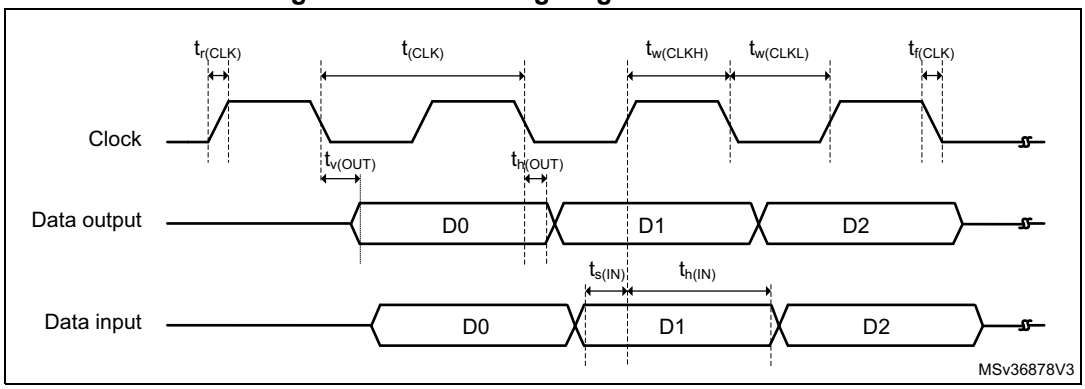

Figure 67. HSPI timing diagram - DTR mode

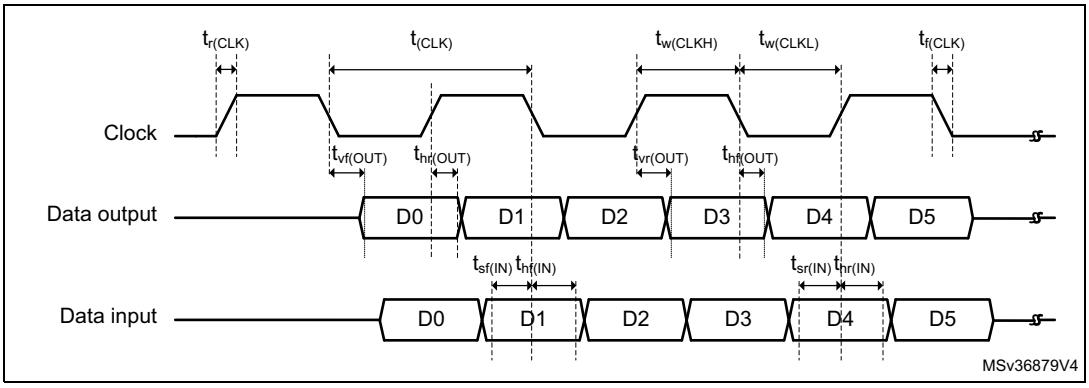

Figure 68. HSPI HyperBus clock

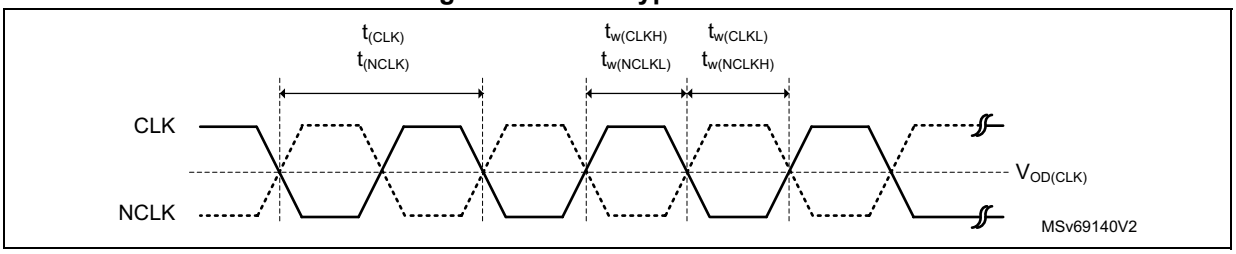

Figure 69. HSPI HyperBus read

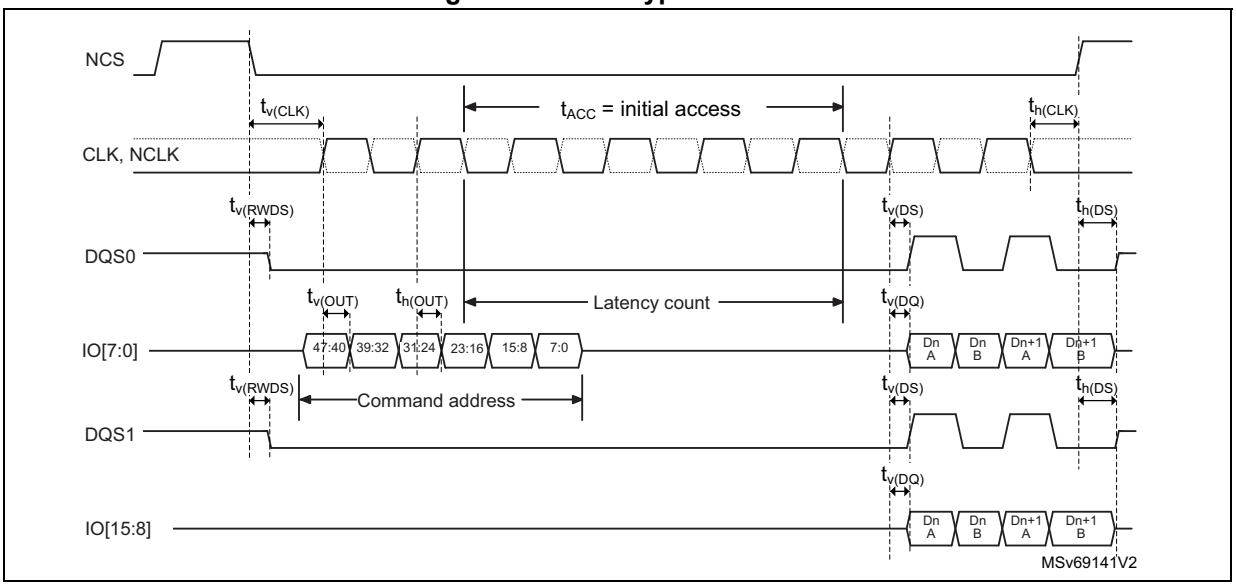

Figure 70. HSPI HyperBus write

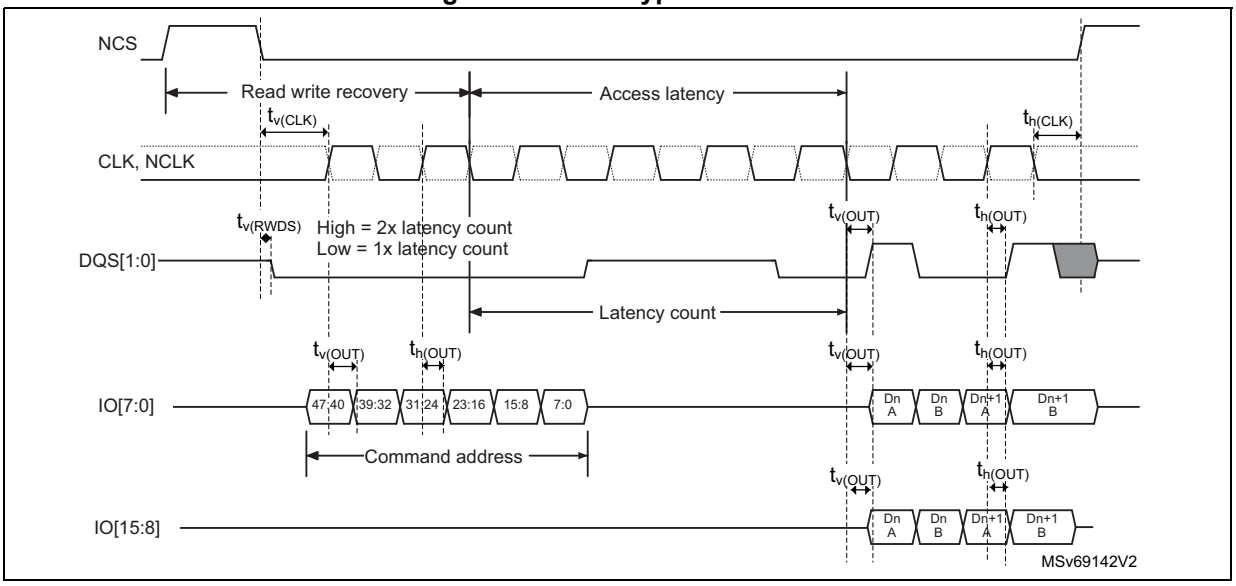

5.3.38 SD/SDIO/e•MMC card host interfaces (SDMMC) characteristics

Unless otherwise specified, the parameters given in *Table 154* and *Table 155* are derived from tests performed under the ambient temperature, f_{AHB} frequency and V_{DD} supply voltage conditions summarized in *Table 33*, with the following configuration:

- Output speed set to OSPEEDRy[1:0] = 10
- Capacitive load C_L = 30 pF, unless otherwise specified
- Measurement points done at 0.5 × V_{DD} level
- I/O compensation cell activated
- HSLV activated when V_{DD} ≤ 2.7 V
- Voltage scaling range 1

Refer to *Section 5.3.15: I/O port characteristics* for more details on the input/output characteristics.

Table 154. SD/*e*•MMC characteristics (V_{DD} = 2.7 V to 3.6 V)(1)(2)

Symbol	Parameter	Conditions	Min	Typ	Max	Unit
f_{PP}	Clock frequency in data transfer mode	-	0	-	100(3)	MHz
$t_{W(CKL)}$	Clock low time	f_{PP} = 52 MHz	8.5	9.5	-	ns
$t_{W(CKH)}$	Clock high time	f_{PP} = 52 MHz	8.5	9.5	-	
CMD, D inputs (referenced to CK) in *e*•MMC legacy/SDR/DDR and SD HS/SDR(4)/DDR(4) modes						
t_{ISU}	Input setup time HS	-	3.5	-	-	ns
t_{IH}	Input hold time HS	-	1.5	-	-	
t_{IDW}(5)	Input valid window (variable window)	-	4.5	-	-	
CMD, D outputs (referenced to CK) in *e*•MMC legacy/SDR/DDR and SD HS/SDR(4)/DDR(4) modes						
t_{OV}	Output valid time HS	-	-	6	7/9.5(6)	ns
t_{OH}	Output hold time HS	-	3	-	-	
CMD, D inputs (referenced to CK) in SD default mode						
t_{ISU}	Input setup time SD	-	3.5	-	-	ns
t_{IH}	Input hold time SD	-	1.5	-	-	
CMD, D outputs (referenced to CK) in SD default mode						
t_{OV}	Output valid default time SD	-	-	1.5	2/4.5(7)	ns
t_{OH}	Output hold default time SD	-	0	-	-	

1. Evaluated by characterization. Not tested in production.
2. In SD/*e*.MMC DDR mode, the clock OSPEEDRy[1:0] is set to 01 while data OSPEEDRy[1:0] remains at 10.
3. With capacitive load C_L = 20 pF.
4. For SD 1.8 V support, an external voltage converter is needed.
5. Minimum window of time where the data needs to be stable for proper sampling in tuning mode.
6. t_{OV} = 7 ns for SDMMC1 and SDMMC2, t_{OV} = 9.5 ns for SDMMC2 using PB15.
7. t_{OV} = 2 ns for SDMMC1 and SDMMC2, t_{OV} = 4.5 ns for SDMMC2 using PB15.

Table 155. *e*•MMC characteristics (V_{DD} = 1.71 V to 1.9 V)(1)(2)

Symbol	Parameter	Conditions	Min	Typ	Max	Unit
f_{PP}	Clock frequency in data transfer mode	-	-	-	84/40(3)	MHz
$t_{W(CKL)}$	Clock low time	f_{PP} = 52 MHz	8.5	9.5	-	ns
$t_{W(CKH)}$	Clock high time	f_{PP} = 52 MHz	8.5	9.5	-	
CMD, D inputs (referenced to CK) in *e*•MMC mode						
t_{ISU}	Input setup time HS	-	3	-	-	ns
t_{IH}	Input hold time HS	-	2	-	-	
t_{IDW}(4)	Input valid window (variable window)	-	4	-	-	
CMD, D outputs (referenced to CK) in *e*•MMC mode						
t_{OV}	Output valid time HS	-	-	6	6.5/16.5(5)	ns
t_{OH}	Output hold time HS	-	4	-	-	

1. Evaluated by characterization. Not tested in production.
2. With capacitive load C_L = 20 pF.
3. For DDR mode on SDMMC2 and using PB15, the maximum frequency is 40 MHz and HSLV must be OFF.
4. Minimum window of time where the data needs to be stable for proper sampling in tuning mode.
5. t_{OV} = 6.5 ns for SDMMC1 and SDMMC2, t_{OV} = 16.5 ns for SDMMC2 using PB15.

Figure 71. SD high-speed mode

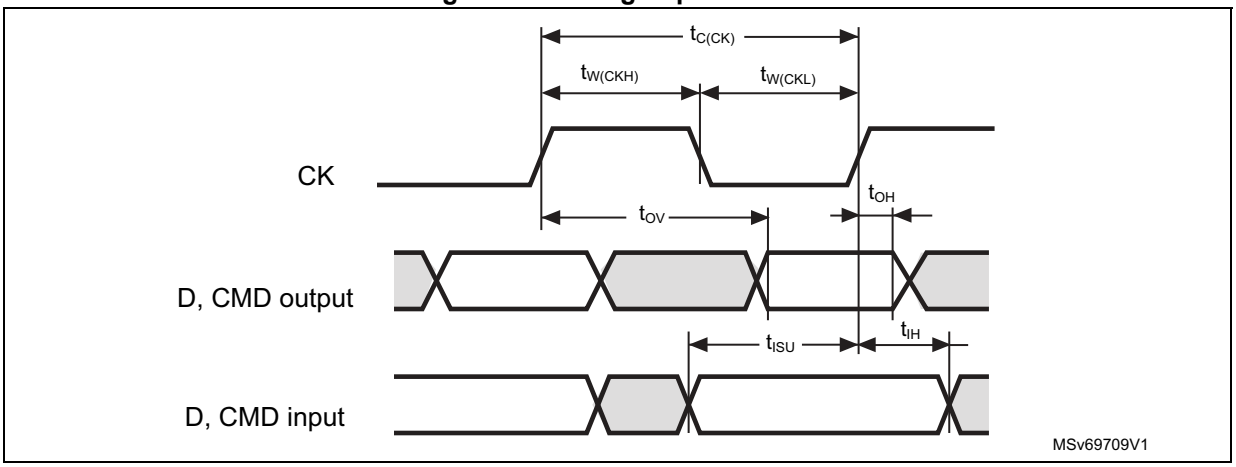

Figure 72. SD default mode

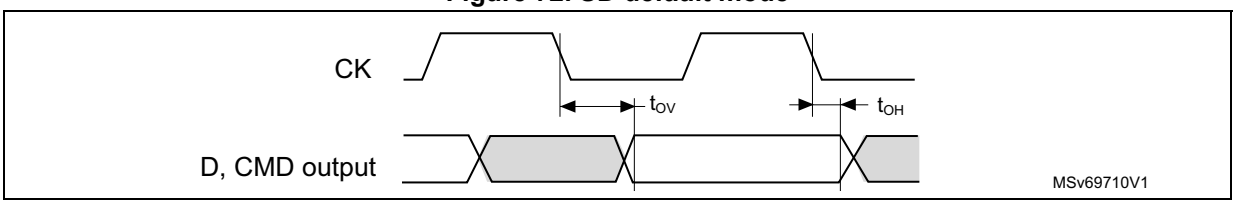

Figure 73. SDMMC DDR mode

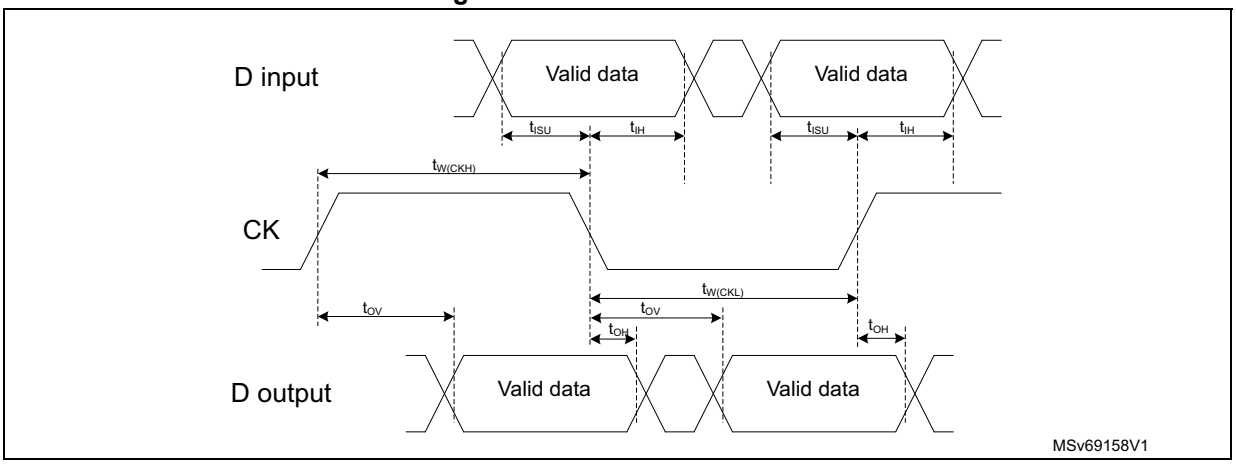

5.3.39 Delay block characteristics

Unless otherwise specified, the parameters given in the table below are derived from tests performed under the ambient temperature, f_{HCLK} frequency and V_{DD} supply voltage conditions summarized in *Table 33*.

Table 156. Delay block characteristics(1)

Symbol	Parameter	Conditions	Min	Typ	Max	Unit
t_{init}	Initial delay	-	900	1300	2100	ps
t_{Δ}	Unit delay	-	34	41	51	

1. Evaluated by characterization. Not tested in production.

5.3.40 I²C interface characteristics

The I²C interface meets the timings requirements of the I²C-bus specification and user manual rev. 03 for:

- Standard-mode (Sm): with a bitrate up to 100 Kbit/s
- Fast-mode (Fm): with a bitrate up to 400 Kbit/s
- Fast-mode Plus (Fm+): with a bitrate up to 1 Mbit/s

The I2C timings requirements are specified by design, not tested in production, when the I2C peripheral is properly configured (refer to the product reference manual).

The SDA and SCL I/O requirements are met with the following restrictions: the SDA and SCL I/O pins are not “true” open-drain. When configured as open-drain, the PMOS connected between the I/O pin and V_{DDIOx} is disabled, but is still present. Only FT_f I/O pins support Fm+ low-level output-current maximum requirement. Refer to *Section 5.3.15: I/O port characteristics* for the I2C I/Os characteristics.

All I2C SDA and SCL I/Os embed an analog filter. Refer to the table below for the analog filter characteristics.

Table 157. I2C analog filter characteristics(1)

Symbol	Parameter	Min	Max	Unit
t_{AF}	Maximum pulse width of spikes that are suppressed by the analog filter	50(2)	152(3)	ns

1. Specified by design. Not tested in production.
2. Spikes with widths below t_{AF} min are filtered.
3. Spikes with width above t_{AF} max are not filtered.

5.3.41 USART (SPI mode) characteristics

Unless otherwise specified, the parameters given in the table below are derived from tests performed under the ambient temperature, f_{PCLKx} frequency and V_{DD} supply voltage conditions summarized in *Table 33*, with the following configuration:

- Output speed set to OSPEEDRy[1:0] = 10
- Capacitive load C_L = 30 pF
- Measurement points done at 0.5 × V_{DD} level
- I/O compensation cell activated
- HSLV activated when $V_{DD} \leq 2.7$ V
- Voltage scaling range 1

Refer to *Section 5.3.15: I/O port characteristics* for more details on the input/output alternate function characteristics (NSS, CK, TX, RX for USART).

Table 158. USART (SPI mode) characteristics(1)

Symbol	Parameter	Conditions	Min	Typ	Max	Unit
f_{CK}	USART clock frequency	SPI master mode, 1.71 V ≤ V_{DD} ≤ 3.6 V	-	-	20	MHz
		SPI slave receiver, 1.71 V ≤ V_{DD} ≤ 3.6 V	-	-	53	
		SPI slave transmitter, 1.71 V ≤ V_{DD} ≤ 3.6 V	-	-	27	
		SPI slave transmitter, 2.7 V ≤ V_{DD} ≤ 3.6 V	-	-	30	

Table 158. USART (SPI mode) characteristics(1) (continued)

Symbol	Parameter	Conditions	Min	Typ	Max	Unit
$t_{su(NSS)}$	NSS setup time	SPI slave mode	T_{ker}(2) + 2	-	-	ns
$t_{h(NSS)}$	NSS hold time	SPI slave mode	2	-	-	
$t_{w(CKH)}$ $t_{w(CKL)}$	CK high and low time	SPI master mode	$1/f_{CK}$ / 2 - 1	$1/f_{CK}$ / 2	$1/f_{CK}$ / 2 + 1	
$t_{su(RX)}$	Data input setup time	SPI master mode	15	-	-	
$t_{su(TX)}$		SPI slave mode	2.5	-	-	
$t_{h(RX)}$	Data input hold time	SPI master mode	4	-	-	
$t_{h(RX)}$		SPI slave mode	1	-	-	
$t_{v(TX)}$	Data output valid time	SPI slave mode, 2.7 V ≤ V_{DD} ≤ 3.6 V	-	13	16.5	
		SPI slave mode, 1.71 V ≤ V_{DD} ≤ 3.6 V	-	13	18.5	
$t_{v(TX)}$		SPI master mode	-	2.5	6.5	
$t_{h(TX)}$	Data output hold time	SPI slave mode	8.5	-	-	
$t_{h(TX)}$		SPI master mode	0.5	-	-	

1. Evaluated by characterization. Not tested in production.
2. T_{ker} is the usart_ker_ck_pres clock period.

Figure 74. USART timing diagram in SPI master mode

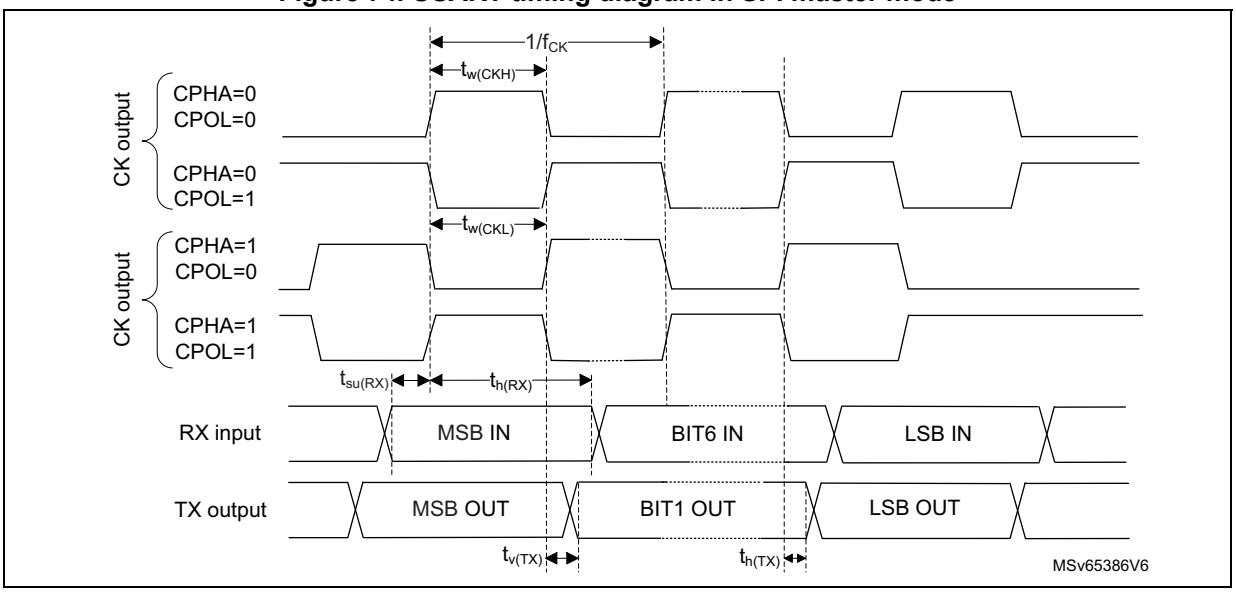

Figure 75. USART timing diagram in SPI slave mode

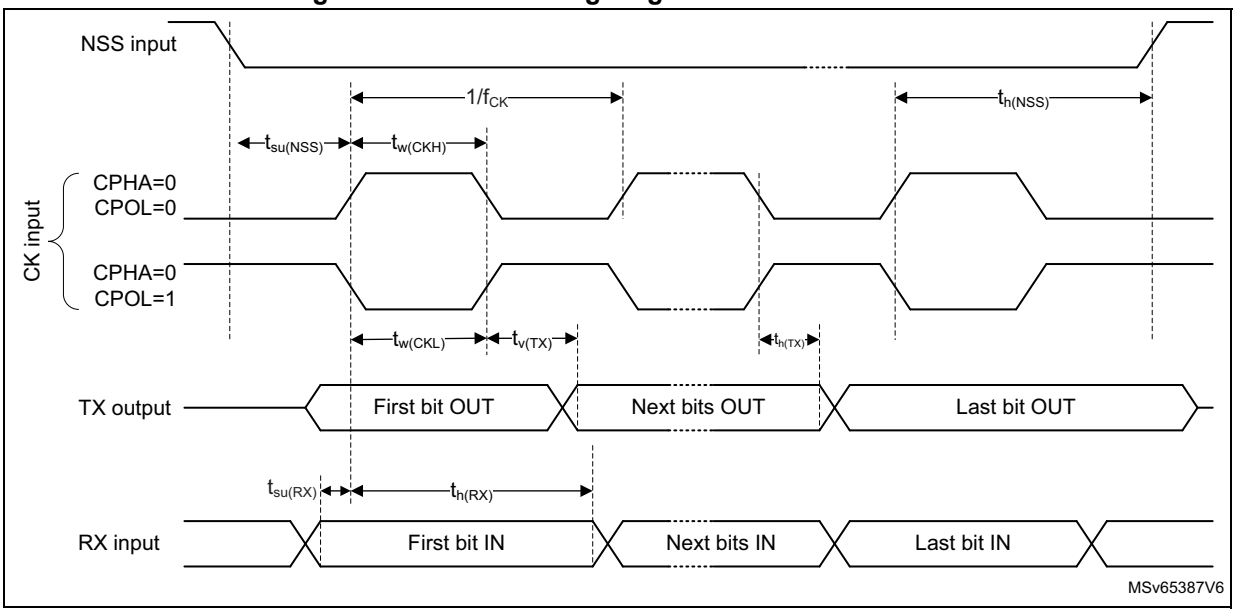

5.3.42 SPI characteristics

Unless otherwise specified, the parameters given in the table below are derived from tests performed under the ambient temperature, f_{PCLKx} frequency and supply voltage conditions summarized in *Table 33*.

- Output speed set to OSPEEDRy[1:0] = 10
- Capacitive load C_L = 30 pF
- Measurement points done at 0.5 × V_{DD} level
- I/O compensation cell activated
- HSLV activated when V_{DD} ≤ 2.7 V

Refer to *Section 5.3.15: I/O port characteristics* for more details on the input/output alternate function characteristics (NSS, SCK, MOSI, MISO for SPI).

Table 159. SPI characteristics[1]

Symbol	Parameter	Conditions	Min	Typ	Max	Unit
f_{SCK} $1/t_{c(SCK)}$	SPI clock frequency	Master mode, 2.7 V ≤ V_{DDIOX} ≤ 3.6 V, voltage range 1	-	-	80	MHz
		Master mode, 1.71 V ≤ V_{DDIOX} < 2.7 V voltage range 1	-	-	75 or 50[2]	
		Master transmitter mode, 2.7 V ≤ V_{DDIOX} ≤ 3.6 V, voltage range 1	-	-	80	
		Master transmitter mode, 1.71 V ≤ V_{DDIOX} ≤ 2.7 V, voltage range 1	-	-	75 or 50[2]	
		Slave receiver mode, 1.71 V ≤ V_{DDIOX} ≤ 3.6 V, voltage range 1	-	-	100	
		Slave mode transmitter/full duplex[3], 1.71 V ≤ V_{DDIOX} < 2.7 V, voltage range 1	-	-	37 or 25[4]	
		Slave mode transmitter/full duplex[3], 2.7 V ≤ V_{DDIOX} ≤ 3.6 V, voltage range 1	-	-	35.5	
		Master or slave mode, 1.71 V ≤ V_{DDIOX} ≤ 3.6 V, voltage range 4	-	-	12.5	
		Master or slave mode, 1.08 V ≤ V_{DDIO2} ≤ 1.32 V[5]	-	-	15	
$t_{su(NSS)}$	NSS setup time	Slave mode	4	-	-	ns
$t_{h(NSS)}$	NSS hold time	Slave mode	3	-	-	
$t_{w(SCKH)}$ $t_{w(SCKL)}$	SCK high and low time	Master mode	t_{SCK}[6]/2 - 1	$t_{SCK}/2$	$t_{SCK}/2 + 1$	
$t_{su(MI)}$	Data input setup time	Master mode	4.5	-	-	
$t_{su(SI)}$		Slave mode	2.5	-	-	
$t_{h(MI)}$	Data input hold time	Master mode	3	-	-	
$t_{h(SI)}$		Slave mode	1	-	-	
$t_{a(SO)}$	Data output access time	Slave mode	9	12	34	

Table 159. SPI characteristics(1) (continued)

Symbol	Parameter	Conditions	Min	Typ	Max	Unit
$t_{dis(SO)}$	Data output disable time	Slave mode	9	10	16	ns
$t_{v(SO)}$	Data output valid time	Slave mode, 2.7 V ≤ V_{DDIOX} ≤ 3.6 V, voltage range 1	-	11.5	14	
		Slave mode, 1.71 V ≤ V_{DDIOX} < 2.7 V, voltage range 1	-	11.5	13.5 or 20(4)	
		Slave mode, 1.71 V ≤ V_{DDIOX} ≤ 3.6 V, voltage range 4	-	17	19.5 or 27(4)	
		Slave mode, 1.08 V ≤ V_{DDIO2} ≤ 1.32 V(5)	-	23	25	
$t_{v(MO)}$	Data output valid time	Master mode	-	2.5	3 or 9.5(7) or 12.5(8)	
$t_{h(SO)}$	Data output hold time	Slave mode, 1.71 V ≤ V_{DDIOX} ≤ 3.6 V	7	-	-	
		Slave mode, 1.08 V ≤ V_{DDIO2} ≤ 1.32 V(5)	15	-	-	
$t_{h(MO)}$		Master mode	0.5	-	-	

1. Evaluated by characterization. Not tested in production.
2. When using PA5, PA9, PC10, PB3, PB13.
3. The maximum frequency in slave transmitter mode is determined by the sum of $t_{v(SO)}$ and $t_{su(MI)}$ that has to fit into SCK low or high phase preceding the SCK sampling edge. This value can be achieved when the SPI communicates with a master having $t_{su(MI)}$ = 0 while Duty(SCK) = 50%.
4. When using PA11, PB4, PB14.
5. The SPI is mapped on port G I/Os, that is supplied by VDDIO2 specified down to 1.08V. The SPI is tested at this value.
6. t_{SCK} = tspi_ker_ck × baudrate prescaler.
7. When using PA12.
8. When using PB15.

Figure 76. SPI timing diagram - slave mode and CPHA = 0

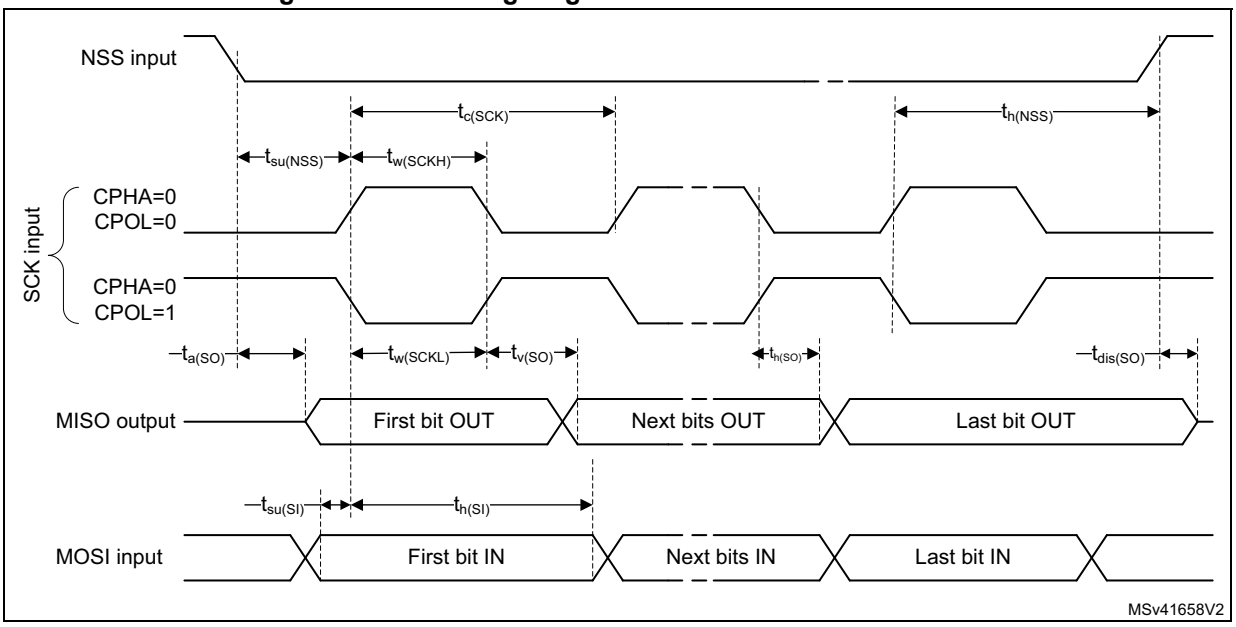

Figure 77. SPI timing diagram - slave mode and CPHA = 1

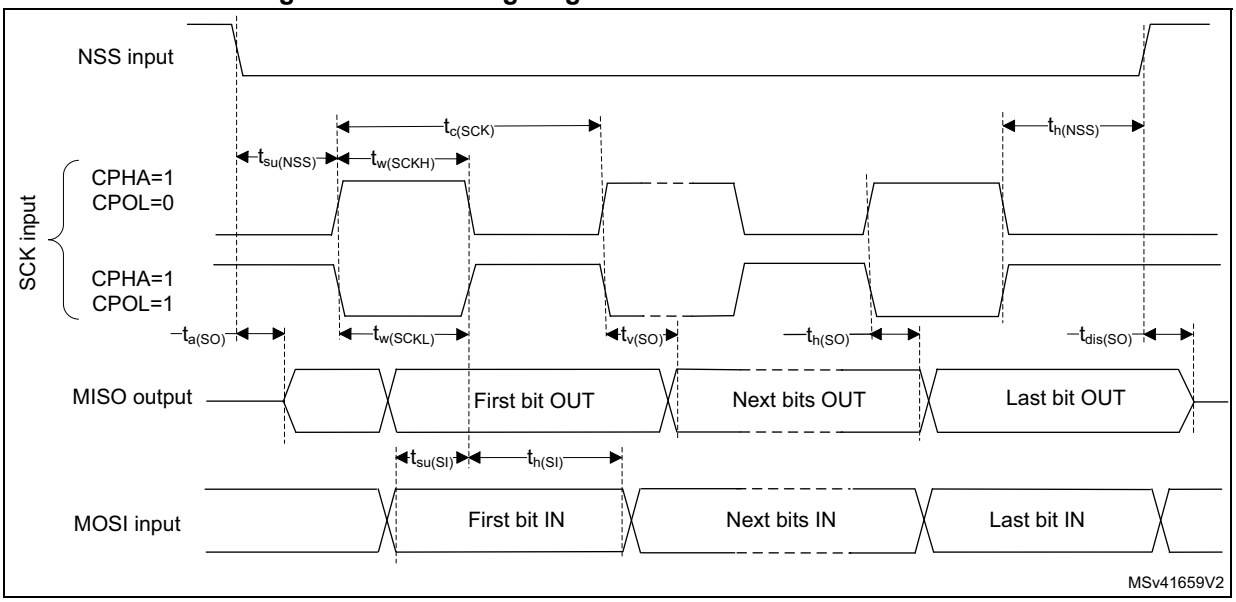

Figure 78. SPI timing diagram - master mode

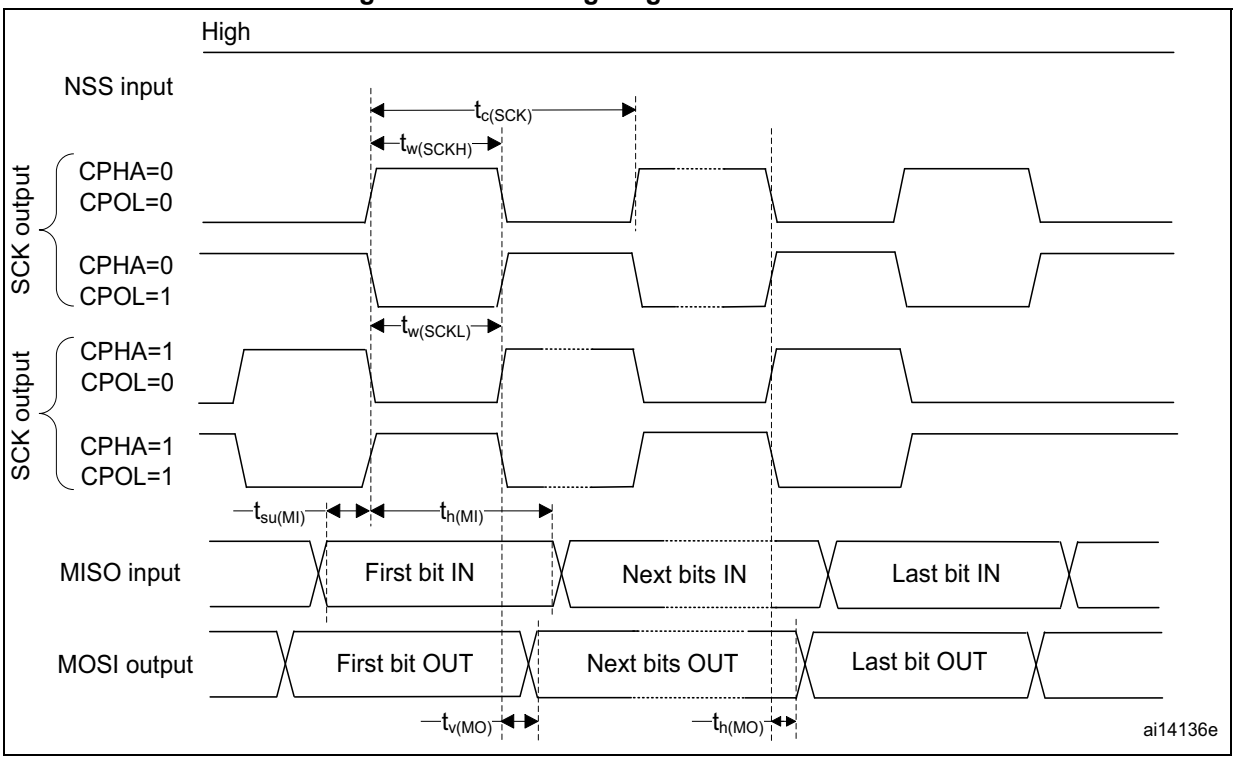

5.3.43 SAI characteristics

Unless otherwise specified, the parameters given in the table below are derived from tests performed under the ambient temperature, f_{PCLKx} frequency and V_{DD} supply voltage conditions summarized in *Table 33*, with the following configuration:

- Output speed set to OSPEEDRy[1:0] = 10
- Capacitive load C_L = 30 pF
- Measurement points done at 0.5 × V_{DD} level
- I/O compensation cell activated
- HSLV activated when V_{DD} ≤ 2.7 V
- Voltage scaling range 1

Refer to *Section 5.3.15: I/O port characteristics* for more details on the input/output alternate function characteristics (SCK, SD, FS).

Table 160. SAI characteristics[1]

Symbol	Parameter	Conditions	Min	Max	Unit
f_{MCK}	SAI main clock output	-	-	50	MHz
f_{SCK}	SAI clock frequency[2]	Master transmitter, 2.7 V ≤ V_{DDIOX} ≤ 3.6 V	-	26	
		Master transmitter, 1.71 V ≤ V_{DDIOX} ≤ 3.6 V	-	18	
		Master receiver, 1.71 V ≤ V_{DDIOX} ≤ 3.6 V	-	21.5	
		Slave transmitter, 2.7 V ≤ V_{DDIOX} ≤ 3.6 V	-	27.5	
		Slave transmitter, 1.71 V ≤ V_{DDIOX} ≤ 3.6 V	-	18	
		Slave receiver, 1.71 V ≤ V_{DDIOX} ≤ 3.6 V	-	50	
$t_{v(FS)}$	FS valid time	Master mode, 2.7 V ≤ V_{DDIOX} ≤ 3.6 V	-	16	ns
		Master mode 1.71 V ≤ V_{DDIOX} ≤ 3.6 V	-	23	
$t_{h(FS)}$	FS hold time	Master mode	7	-	
$t_{su(FS)}$	FS setup time	Slave mode	2.5	-	
$t_{h(FS)}$	FS hold time	Slave mode	1	-	
$t_{su(SD_A_MR)}$	Data input setup time	Master receiver	4	-	
$t_{su(SD_B_SR)}$		Slave receiver	3	-	
$t_{h(SD_A_MR)}$	Data input hold time	Master receiver	2	-	
$t_{h(SD_B_SR)}$		Slave receiver	1	-	
$t_{v(SD_B_ST)}$	Data output valid time	Slave transmitter (after enable edge), 2.7 V ≤ V_{DDIOX} ≤ 3.6 V	-	18	
		Slave transmitter (after enable edge), 1.71 V ≤ V_{DDIOX} ≤ 3.6 V	-	27.5	
$t_{h(SD_B_ST)}$	Data output hold time	Slave transmitter (after enable edge)	8	-	
$t_{v(SD_A_MT)}$	Data output valid time	Master transmitter (after enable edge), 2.7 V ≤ V_{DDIOX} ≤ 3.6 V	-	19	
		Master transmitter (after enable edge), 1.71 V ≤ V_{DDIOX} ≤ 3.6 V	-	27.5	
$t_{h(SD_A_MT)}$	Data output hold time	Master transmitter (after enable edge)	8	-	

1. Evaluated by characterization. Not tested in production.
2. APB clock frequency that must be at least twice SAI clock frequency.

Figure 79. SAI master timing diagram

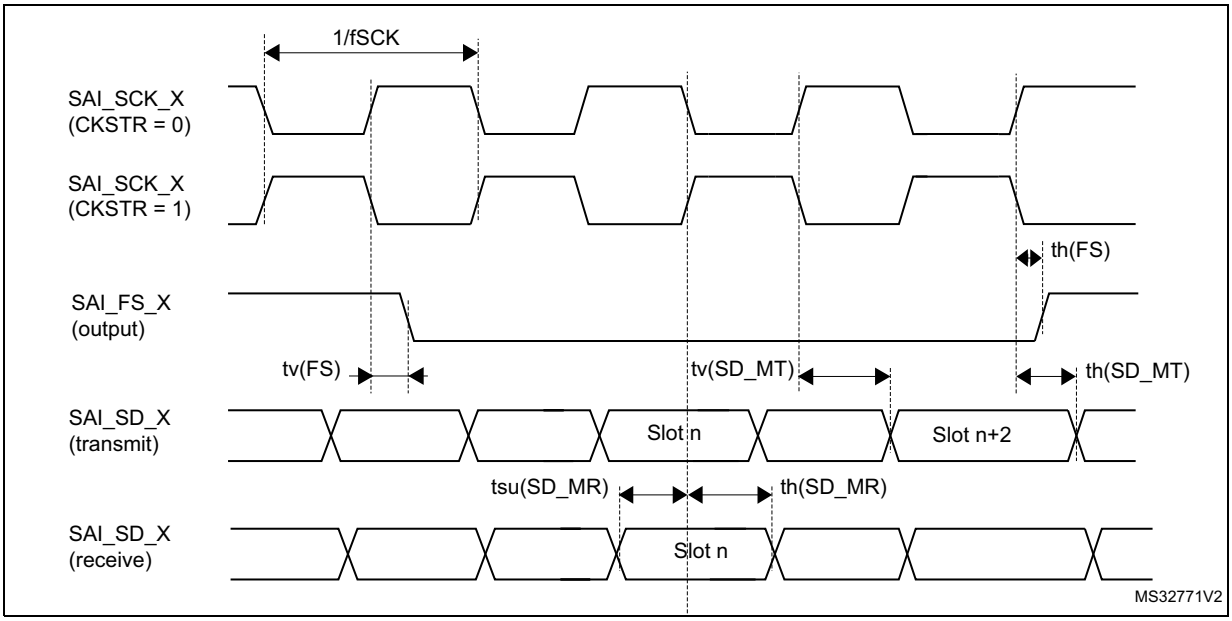

Figure 80. SAI slave timing diagram

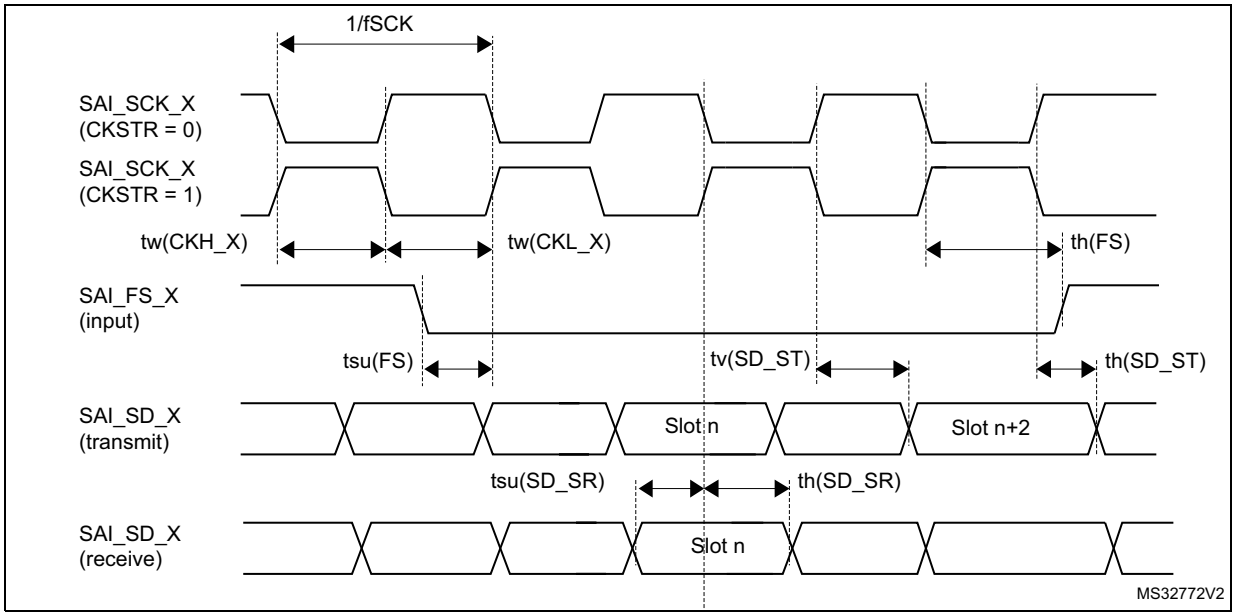

5.3.44 OTG_HS characteristics

The OTG_HS controller complies with the following specifications:

- USB On-The-Go supplement, revision 2.0
- Universal Serial Bus revision 2.0 specification
- Battery charging specification, revision 1.2

The parameters given in tables below are derived from tests performed under temperature and V_{DD} supply voltage conditions summarized in *Table 33: General operating conditions*.

Table 161. OTG_HS electrical characteristics(1)

Symbol	Parameter	Condition	Min	Typ	Max	Unit
V_{DDUSB}	USB transceiver operating voltage	-	3.12(2)	-	3.6	V
f_{HCLK}	f_{HCLK} value to guarantee proper operation of the OTG_HS interface	-	30(3)	-	-	MHz
R_{PUI}	Embedded USB_DP pull-up value during idle	-	900	1250	1575	Ω
R_{PUR}	Embedded USB_DP pull-up value during reception	-	1425(3)	2250	3090(3)	
R_{PD}	Embedded USB_DP and USB_DM pull-down value	-	14250	-	24800	
Z_{DRV}	Output driver impedance(4)	Driving high or low	40.5(3)	45	49.5(3)	
t_{lr}	Rise time	CL < 5 pF	0.5(3)	-	-	ns
t_{lf}	Fall time	CL < 5 pF	0.5(3)	-	-	
t_{lrfm}	Rise/fall time matching	-	80(3)	-	125(3)	%

1. Evaluated by characterization. Not tested in production, unless otherwise specified.
2. The USB functionality is ensured down to 3 V but not the full USB electrical characteristics which are degraded in 3.0 to 3.12 V voltage range.
3. Specified by design. Not tested in production.
4. No external termination series resistors are required on USB_DP (D+) and USB_DM (D-). The matching impedance is already included in the embedded driver.

Table 162. OTG_HS DC electrical characteristics(1)

Symbol	Parameter	Condition	Min	Typ	Max	Unit
V_{hssq}	High-speed squelch detection threshold	-	100(2)	-	150	mV
V_{hsdsc}	High-speed disconnect detection threshold	-	525	-	625	
V_{hsdif}	High-speed differential detection threshold	-	100	-	-	
V_{hscm}	High-speed data signaling common mode voltage range	-	-50	-	500	
V_{hsoi}	High-speed idle level	-	-10	-	10	
V_{hsoh}	High-speed data signaling high	-	360	-	440	
V_{hsol}	High-speed data signaling low	-	-10	-	10	
$V_{hchirpj}$	Chirp J level	-	700	-	1100	
$V_{hchirpk}$	Chirp K level	-	-900	-	-500	

1. Evaluated by characterization. Not tested in production.
2. 50 mV test waivers from usb.org have been applied.

Table 163. OTG_HS PHY BCD electrical characteristics(1)

Symbol	Parameter	Conditions	Min	Typ	Max	Unit
$I_{DD(USBBCD)}$	Primary detection mode consumption on V_{DDUSB}	-	-	4.9	5.7	mA
	Secondary detection mode consumption on V_{DDUSB}	-	-	4.8		
$I_{DD11(USBBCD)}$	Primary detection mode consumption on $V_{DD11USB}$	-	-	5.2	7.4	
	Secondary detection mode consumption on $V_{DD11USB}$	-	-	5.3		
R_{DAT_LKG}	Data line leakage resistance	-	300(2)	-	-	kΩ
V_{DAT_LKG}	Data line leakage voltage	-	0.0	-	3.6(2)	V
R_{DCP_DAT}	Dedicated charging port resistance across D+/D-	-	-	-	200(2)	Ω
V_{LGC_HI}	Logic high	-	2.0	-	3.6	V
V_{LGC_LOW}	Logic low	-	-	-	0.8	
V_{LGC}	Logic threshold	-	0.8	-	2.0	
V_{DAT_REF}	Data detect voltage	-	0.25(2)	-	0.4(2)	
V_{DP_SRC}	D+ source voltage	-	0.5	-	0.7	
V_{DM_SRC}	D- source voltage	-	0.5	-	0.7	
I_{DM_SINK}	D- sink current	-	25	-	175	µA
I_{DP_SINK}	D+ sink current	-	25	-	175	
I_{DP_SRC}	Data contact detect current source	-	7.0	-	13	

1. Evaluated by characterization. Not tested in production, unless otherwise specified.
2. Specified by design. Not tested in production.

5.3.45 UCPD characteristics

UCPD controller complies with USB Type-C Rev 1.2 and USB Power Delivery Rev 3.0 specifications.

Table 164. UCPD characteristics

Symbol	Parameter	Conditions	Min	Typ	Max	Unit
V_{DD}	UCPD operating supply voltage	Sink mode only	3.0	3.3	3.6	V
		Sink and source mode	3.135	3.3	3.465	

5.3.46 JTAG/SWD interface characteristics

Unless otherwise specified, the parameters given in the tables below are derived from tests performed under the ambient temperature, f_{HCLKx} frequency and V_{DD} supply voltage conditions summarized in *Table 33*, with the following configuration:

- Output speed set to OSPEEDRy[1:0] = 10
- Capacitive load C_L = 30 pF
- Measurement points done at 0.5 × V_{DD} level

Refer to *Section 5.3.15: I/O port characteristics* for more details on the input/output characteristics.

Table 165. JTAG characteristics(1)

Symbol	Parameter	Conditions	Min	Typ	Max	Unit
F_{TCK}	TCK clock frequency	2.7 V ≤ V_{DD} ≤ 3.6 V	-	-	27.5	MHz
		1.71 V ≤ V_{DD} ≤ 3.6 V	-	-	20.5	
$ti_{su(TMS)}$	TMS input setup time	-	2	-	-	ns
$ti_{h(TMS)}$	TMS input hold time	-	3	-	-	
$ti_{su(TDI)}$	TDI input setup time	-	3	-	-	
$ti_{h(TDI)}$	TDI input hold time	-	1	-	-	
$t_{ov(TDO)}$	TDO output valid time	2.7 V ≤ V_{DD} ≤ 3.6 V	-	14	18	
		1.71 V ≤ V_{DD} ≤ 3.6 V	-	14	24	
$t_{oh(TDO)}$	TDO output hold time	-	10	-	-	

1. Evaluated by characterization. Not tested in production.

Table 166. SWD characteristics(1)

Symbol	Parameter	Conditions	Min	Typ	Max	Unit
F_{SWCLK}	SWCLK clock frequency	2.7 V ≤ V_{DD} ≤ 3.6 V	-	-	60.5	MHz
		1.71 V ≤ V_{DD} ≤ 3.6 V	-	-	43	
$ti_{su(SWDIO)}$	SWDIO input setup time	-	1	-	-	ns
$ti_{h(SWDIO)}$	SWDIO input hold time	-	2.5	-	-	
$t_{ov(SWDIO)}$	SWDIO output valid time	2.7 V ≤ V_{DD} ≤ 3.6 V	-	10.5	16.5	
		1.71 V ≤ V_{DD} ≤ 3.6 V	-	10.5	23	
$t_{oh(SWDIO)}$	SWDIO output hold time	-	7.5	-	-	

1. Evaluated by characterization. Not tested in production.

Figure 81. JTAG timing diagram

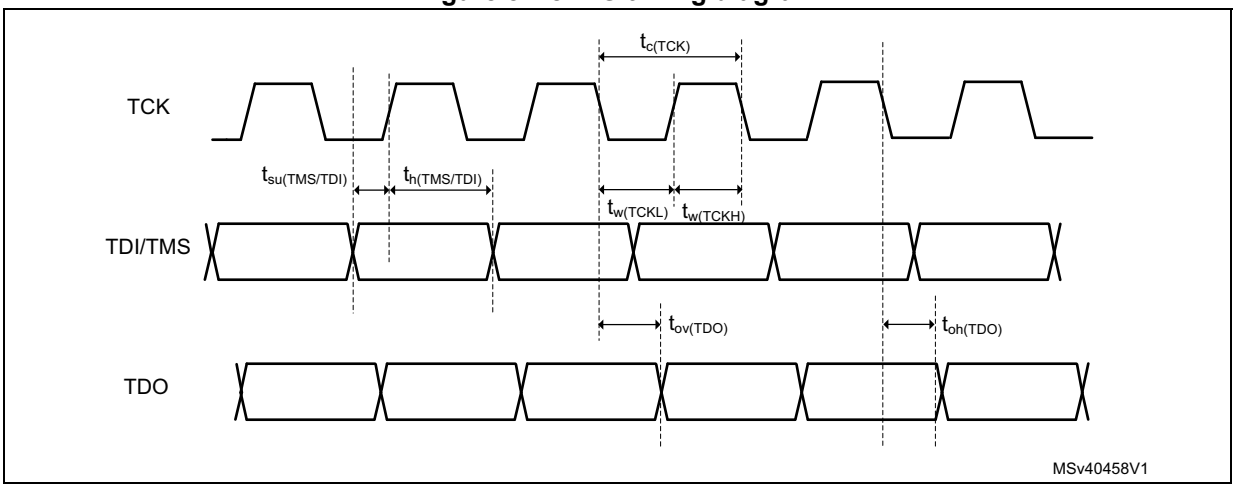

Figure 82. SWD timing diagram

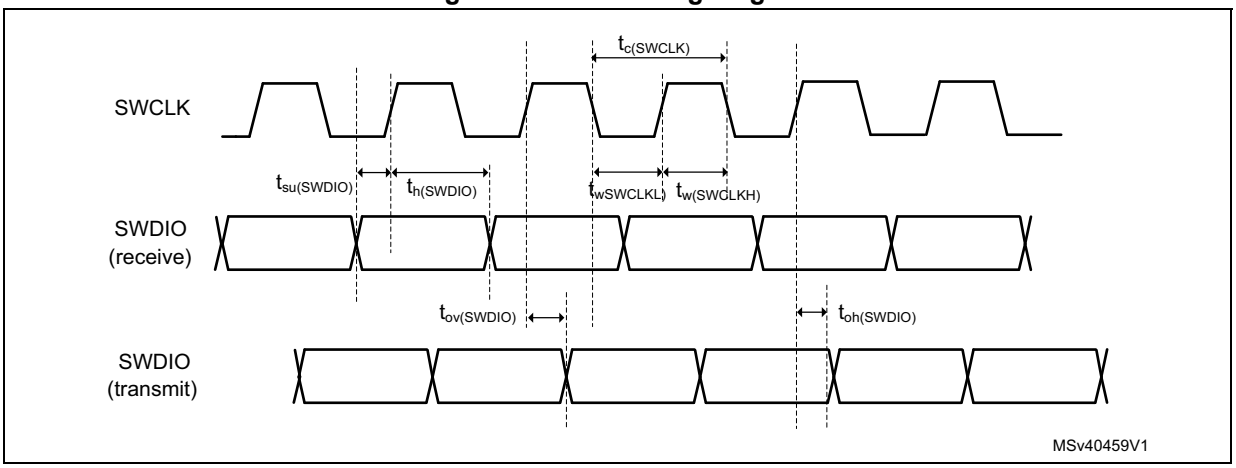

6 Package information

In order to meet environmental requirements, ST offers these devices in different grades of ECOPACK packages, depending on their level of environmental compliance. ECOPACK specifications, grade definitions and product status are available at: *www.st.com*. ECOPACK is an ST trademark.

6.1 Device marking

Refer to technical note "Reference device marking schematics for STM32 microcontrollers and microprocessors" (TN1433) available on *www.st.com*, for the location of pin 1 / ball A1 as well as the location and orientation of the marking areas versus pin 1 / ball A1.

Parts marked as "ES", "E" or accompanied by an engineering sample notification letter, are not yet qualified and therefore not approved for use in production. ST is not responsible for any consequences resulting from such use.

In no event will ST be liable for the customer using any of these engineering samples in production. ST's Quality department must be contacted prior to any decision to use these engineering samples to run a qualification activity.

A WLCSP simplified marking example (if any) is provided in the corresponding package information subsection.

6.2 LQFP100 package information (1L)

This LQFP is 100 lead, 14 x 14 mm low-profile quad flat package.

Note: See list of notes in the notes section.

Figure 83. LQFP100 - Outline(15)

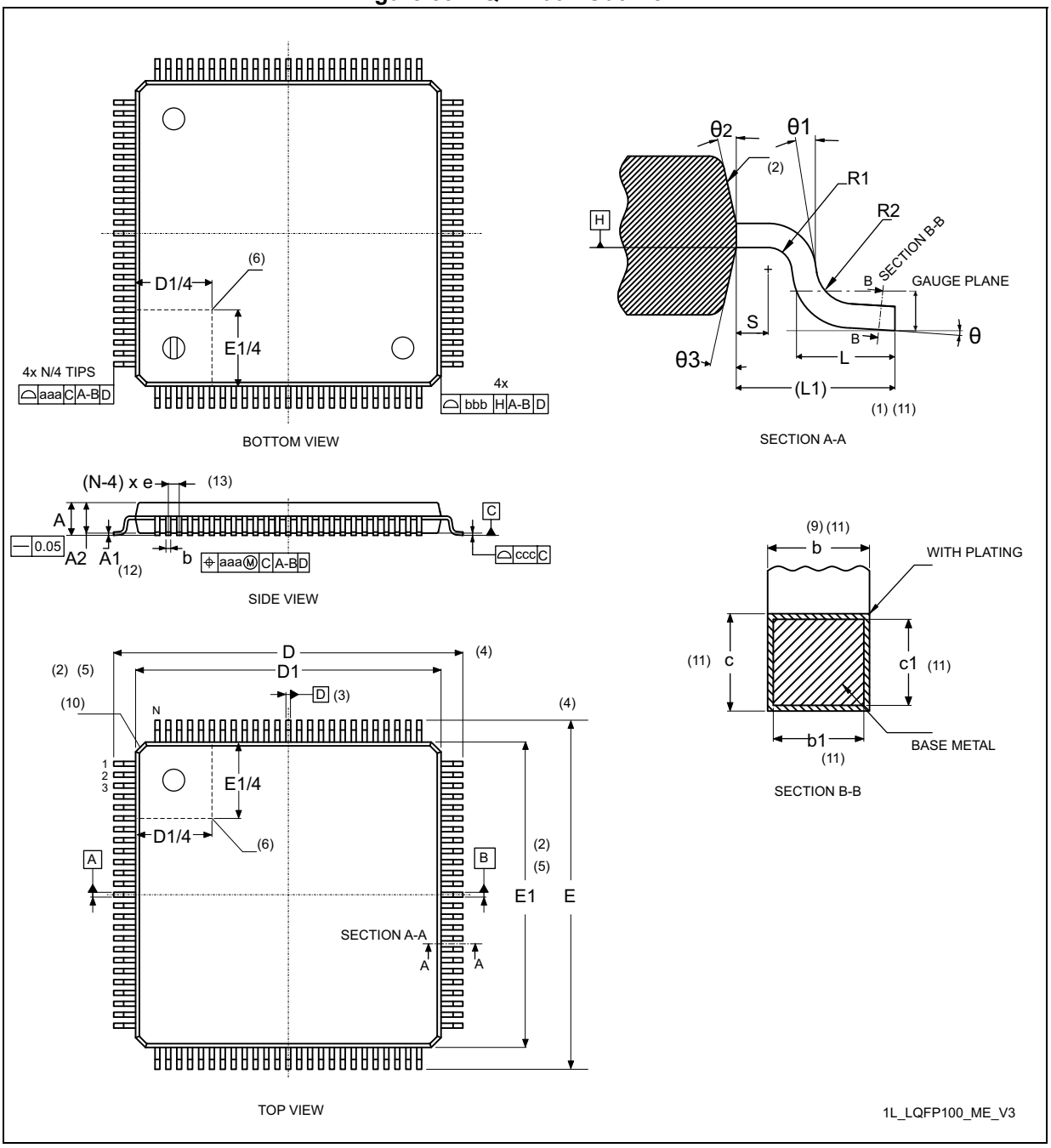

Table 167. LQFP100 - Mechanical data

Symbol	millimeters			inches[14]		
	Min	Typ	Max	Min	Typ	Max
A	-	1.50	1.60	-	0.0590	0.0630
A1[12]	0.05	-	0.15	0.0019	-	0.0059
A2	1.35	1.40	1.45	0.0531	0.0551	0.0570
b[9][11]	0.17	0.22	0.27	0.0067	0.0087	0.0106
b1[11]	0.17	0.20	0.23	0.0067	0.0079	0.0090
c[11]	0.09	-	0.20	0.0035	-	0.0079
c1[11]	0.09	-	0.16	0.0035	-	0.0063
D[4]	16.00 BSC			0.6299 BSC		
D1[2][5]	14.00 BSC			0.5512 BSC		
E[4]	16.00 BSC			0.6299 BSC		
E1[2][5]	14.00 BSC			0.5512 BSC		
e	0.50 BSC			0.0197 BSC		
L	0.45	0.60	0.75	0.177	0.0236	0.0295
L1[1][11]	1.00			-	0.0394	-
N[13]	100					
θ	0°	3.5°	7°	0°	3.5°	7°
θ1	0°	-	-	0°	-	-
θ2	10°	12°	14°	10°	12°	14°
θ3	10°	12°	14°	10°	12°	14°
R1	0.08	-	-	0.0031	-	-
R2	0.08	-	0.20	0.0031	-	0.0079
S	0.20	-	-	0.0079	-	-
aaa[1]	0.20			0.0079		
bbb[1]	0.20			0.0079		
ccc[1]	0.08			0.0031		
ddd[1]	0.08			0.0031		

Notes:

1. Dimensioning and tolerancing schemes conform to ASME Y14.5M-1994.
2. The Top package body size may be smaller than the bottom package size by as much as 0.15 mm.
3. Datums A-B and D to be determined at datum plane H.
4. To be determined at seating datum plane C.
5. Dimensions D1 and E1 do not include mold flash or protrusions. Allowable mold flash or protrusions is “0.25 mm” per side. D1 and E1 are Maximum plastic body size dimensions including mold mismatch.
6. Details of pin 1 identifier are optional but must be located within the zone indicated.
7. All Dimensions are in millimeters.
8. No intrusion allowed inwards the leads.
9. Dimension “b” does not include dambar protrusion. Allowable dambar protrusion shall not cause the lead width to exceed the maximum “b” dimension by more than 0.08 mm. Dambar cannot be located on the lower radius or the foot. Minimum space between protrusion and an adjacent lead is 0.07 mm for 0.4 mm and 0.5 mm pitch packages.
10. Exact shape of each corner is optional.
11. These dimensions apply to the flat section of the lead between 0.10 mm and 0.25 mm from the lead tip.
12. A1 is defined as the distance from the seating plane to the lowest point on the package body.
13. “N” is the number of terminal positions for the specified body size.
14. Values in inches are converted from mm and rounded to 4 decimal digits.
15. Drawing is not to scale.

Figure 84. LQFP100 - Footprint example

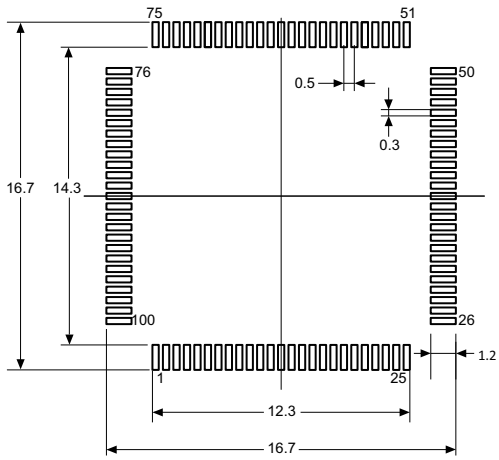

1. Dimensions are expressed in millimeters.

6.3 UFBGA144 package information (A02Y)

This UFBGA is a 144-pin, 10 x 10 mm, 0.80 mm pitch, ultra fine pitch ball grid array package.

Note: See list of notes in the notes section.

Figure 85. UFBGA144 - Outline(13)

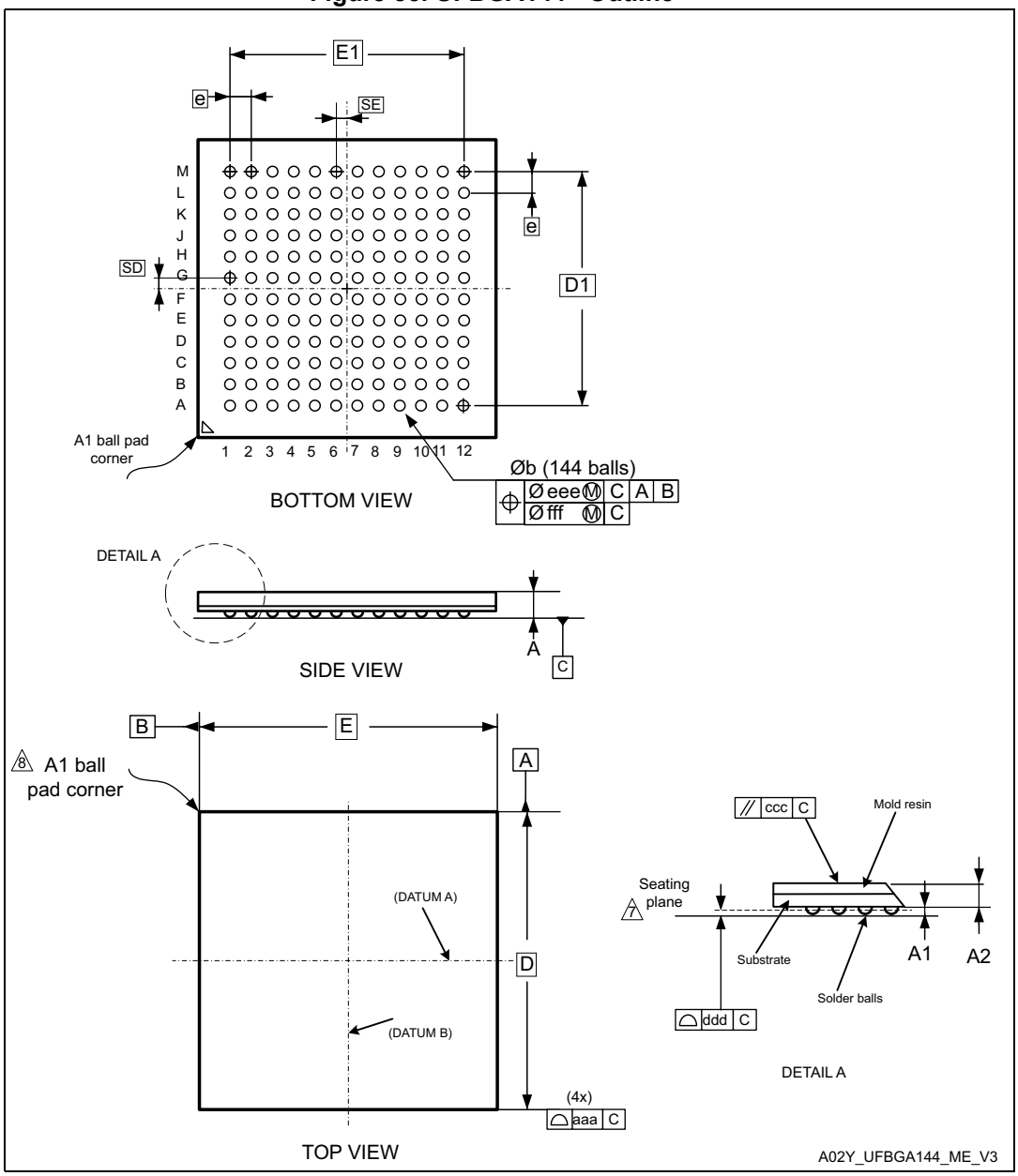

Table 168. UFBGA144 - Mechanical data

Symbol	millimeters[1]			inches[12]		
	Min.	Typ.	Max.	Min.	Typ.	Max.
A[2][3]	-	-	0.60	-	-	0.0236
A1[4]	0.05	-	-	0.0020	-	-
A2	-	0.43	-	-	0.0169	-
b[5]	0.35	0.40	0.45	0.0138	0.0157	0.0177
D	10.00 BSC[6]			0.3937 BSC		
D1	8.80 BSC			0.3465 BSC		
E	10.00 BSC			0.3937 BSC		
E1	8.80 BSC			0.3465 BSC		
e[9]	0.80 BSC			0.0315 BSC		
N[10]	144					
SD[11]	0.40 BSC			0.0157 BSC		
SE[11]	0.40 BSC			0.0157 BSC		
aaa	0.15			0.0059		
ccc	0.20			0.0079		
ddd	0.10			0.0039		
eee	0.15			0.0059		
fff	0.08			0.0031		

Notes:

1. Dimensioning and tolerancing schemes conform to ASME Y14.5M-2009 apart European projection.
2. UFBGA stands for ulta profile fine pitch ball grid array: 0.50 mm < A ≤ 0.65 mm / fine pitch e < 1.00 mm.
3. The profile height, A, is the distance from the seating plane to the highest point on the package. It is measured perpendicular to the seating plane.
4. A1 is defined as the distance from the seating plane to the lowest point on the package body.
5. Dimension b is measured at the maximum diameter of the terminal (ball) in a plane parallel to primary datum C.
6. BSC stands for BASIC dimensions. It corresponds to the nominal value and has no tolerance. For tolerances refer to form and position table. On the drawing these dimensions are framed.
7. Primary datum C is defined by the plane established by the contact points of three or more solder balls that support the device when it is placed on top of a planar surface.
8. The terminal (ball) A1 corner must be identified on the top surface of the package by using a corner chamfer, ink or metalized markings, or other feature of package body or

integral heat slug. A distinguish feature is allowable on the bottom surface of the package to identify the terminal A1 corner. Exact shape of each corner is optional.

9. e represents the solder ball grid pitch.
10. N represents the total number of balls on the BGA.
11. Basic dimensions SD and SE are defined with respect to datums A and B. It defines the position of the centre ball(s) in the outer row or column of a fully populated matrix.
12. Values in inches are converted from mm and rounded to 4 decimal digits.
13. Drawing is not to scale.

Figure 86. UFBGA144 - Footprint example

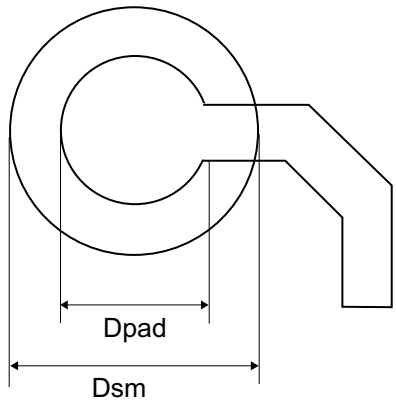

Table 169. UFBGA144 - Example of PCB design rules (0.80 mm pitch BGA)

Dimension	Values
Pitch	0.80 mm
Dpad	0.400 mm
Dsm	0.550 mm typ. (depends on the soldermask registration tolerance)
Stencil opening	0.400 mm
Stencil thickness	Between 0.100 mm and 0.125 mm
Pad trace width	0.120 mm

6.4 WLCSP208 package information (B0KC)

This WLCSP is a 208-ball, 5.8 x 5.6 mm, 0.35 mm pitch, wafer level chip scale array package.

Figure 87. WLCSP208- Outline

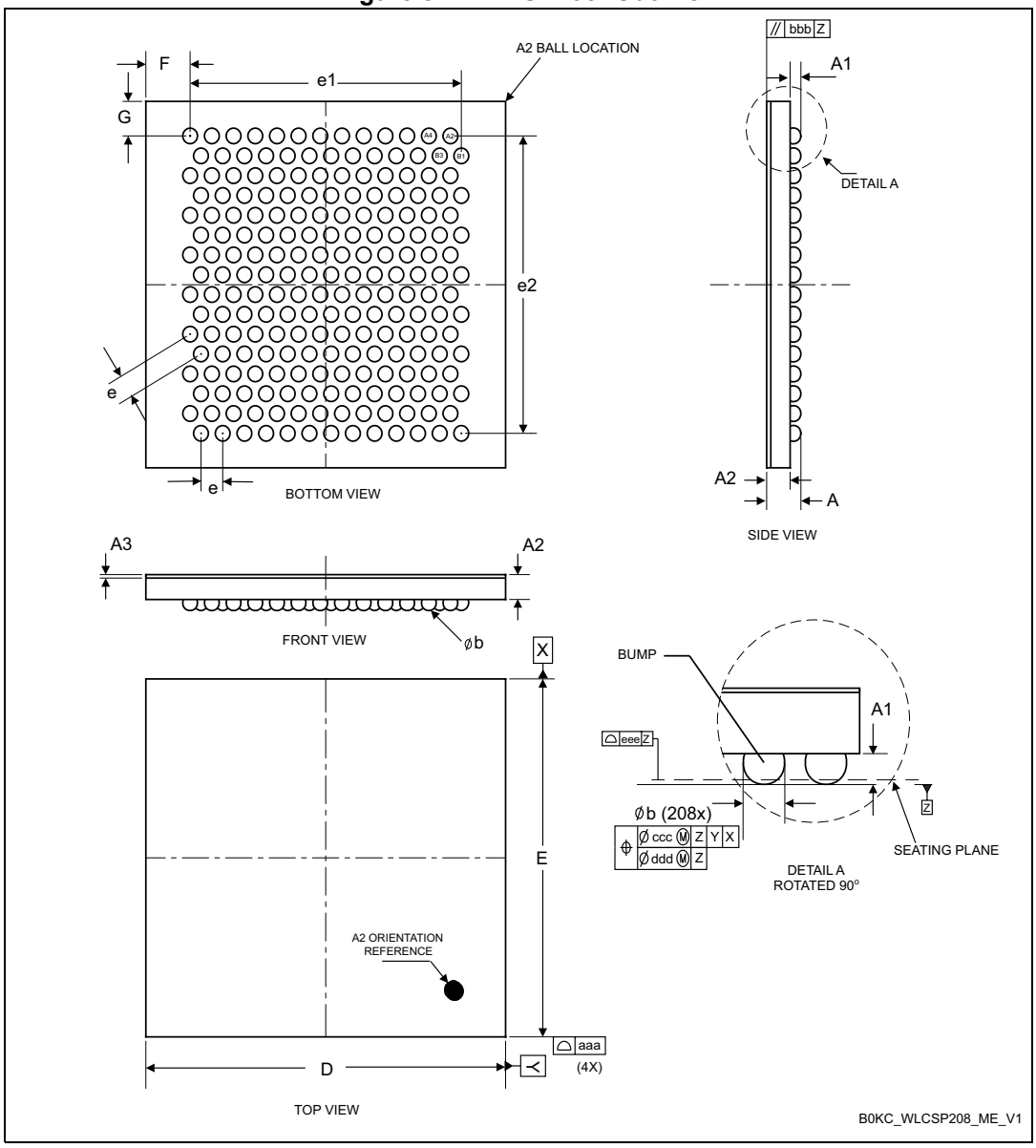

1. Drawing is not to scale.
2. Dimension is measured at the maximum bump diameter parallel to primary datum Z.
3. Primary datum Z and seating plane are defined by the spherical crowns of the bump.
4. Bump position designation per JESD 95-1, SPP-010. The tolerance of position that controls the location of the pattern of balls with respect to datums X and Y. For each ball there is a cylindrical tolerance zone ccc perpendicular to datum Z and located on true position with respect to datums X and Y as defined by e. The axis perpendicular to datum Z of each ball must lie within this tolerance zone.

Table 170. WLCSP208 - Mechanical data

Symbol	millimeters			inches[1]		
	Min	Typ	Max	Min	Typ	Max
A[2]	-	-	0.58	-	-	0.0229
A1	-	0.17	-	-	0.0067	-
A2	-	0.38	-	-	0.0149	-
A3[3]	-	0.025	-	-	0.0010	-
b[4]	0.22	0.24	0.27	0.0087	0.0094	0.0106
D	5.78	5.80	5.82	0.2275	0.2283	0.2291
E	5.58	5.60	5.62	0.2196	0.2204	0.2212
e	-	0.35	-	-	0.0138	-
e1	-	4.38	-	-	0.1724	-
e2	-	4.55	-	-	0.1791	-
F[5]	-	0.713	-	-	0.0281	-
G[5]	-	0.527	-	-	0.0207	-
N[6]	208					
aaa	-	-	0.10	-	-	0.0039
bbb	-	-	0.10	-	-	0.0039
ccc[7]	-	-	0.10	-	-	0.0039
ddd[8]	-	-	0.05	-	-	0.0020
eee	-	-	0.05	-	-	0.0020

1. Values in inches are converted from mm and rounded to 4 decimal digits.
2. The maximum total package height is calculated by the RSS method (root sum square) using nominal and tolerances values of A1 and A2.
3. Back side coating. The nominal dimension is rounded to the third decimal place resulting from process capability.
4. Dimension is measured at the maximum bump diameter parallel to primary datum Z.
5. Calculated dimensions are rounded to the third decimal place.
6. N is the total number of terminals.
7. Bump position designation per JESD 95-1, SPP-010. The tolerance of position that controls the location of the pattern of balls with respect to datums X and Y. For each ball, there is a cylindrical tolerance zone ccc perpendicular to datum Z and located on true position with respect to datums X and Y as defined by e. The axis perpendicular to datum Z of each ball must lie within this tolerance zone.
8. The tolerance of position that controls the location of the balls within the matrix with respect to each other. For each ball there is a cylindrical tolerance zone ddd perpendicular to datum Z and located on true position as defined by e. The axis perpendicular to datum Z of each ball must lie within this tolerance zone. Each tolerance zone ddd in the array is contained entirely in the respective zone ccc above. The axis of each ball must lie simultaneously in both tolerance zones.

Figure 88. WLCSP208 - Recommended footprint

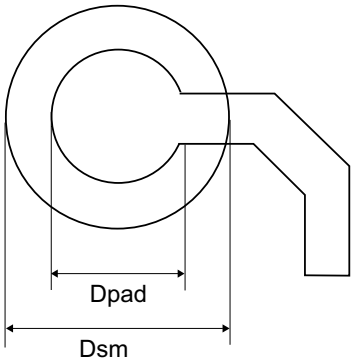

Table 171. WLCSP208 - Recommended PCB design rules

Dimension	Recommended values
Pitch	0.35 mm
Dpad	0.200 mm
Dsm	0.275 mm typ. (depends on soldermask registration tolerance)
Stencil opening	0.230 mm
Stencil thickness	0.080 mm

Device marking for WLCSP208

The following figure gives an example of topside marking orientation versus ball A1 identifier location.

The printed markings may differ depending on the supply chain.

Other optional marking or inset/upset marks, which also depend on supply chain operations, are not indicated below.

Figure 89. WLCSP208 marking example (package top view)

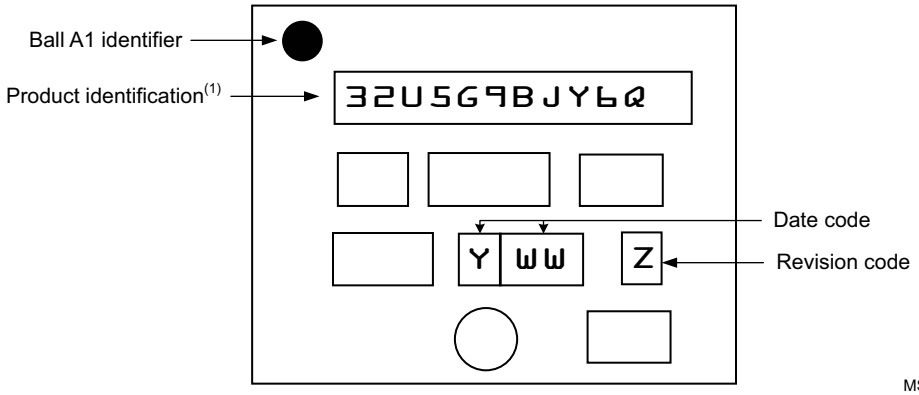

1. Parts marked as ES or E or accompanied by an Engineering Sample notification letter are not yet qualified

and therefore not approved for use in production. ST is not responsible for any consequences resulting from such use. In no event will ST be liable for the customer using any of these engineering samples in production. ST's Quality department must be contacted prior to any decision to use these engineering samples to run a qualification activity.

6.5 TFBGA216 package information (A0L2)

This TFBGA is a 216-ball, 13 x 13 mm, 0.8 mm pitch, fine pitch ball grid array package.

Figure 90. TFBGA216 - Outline

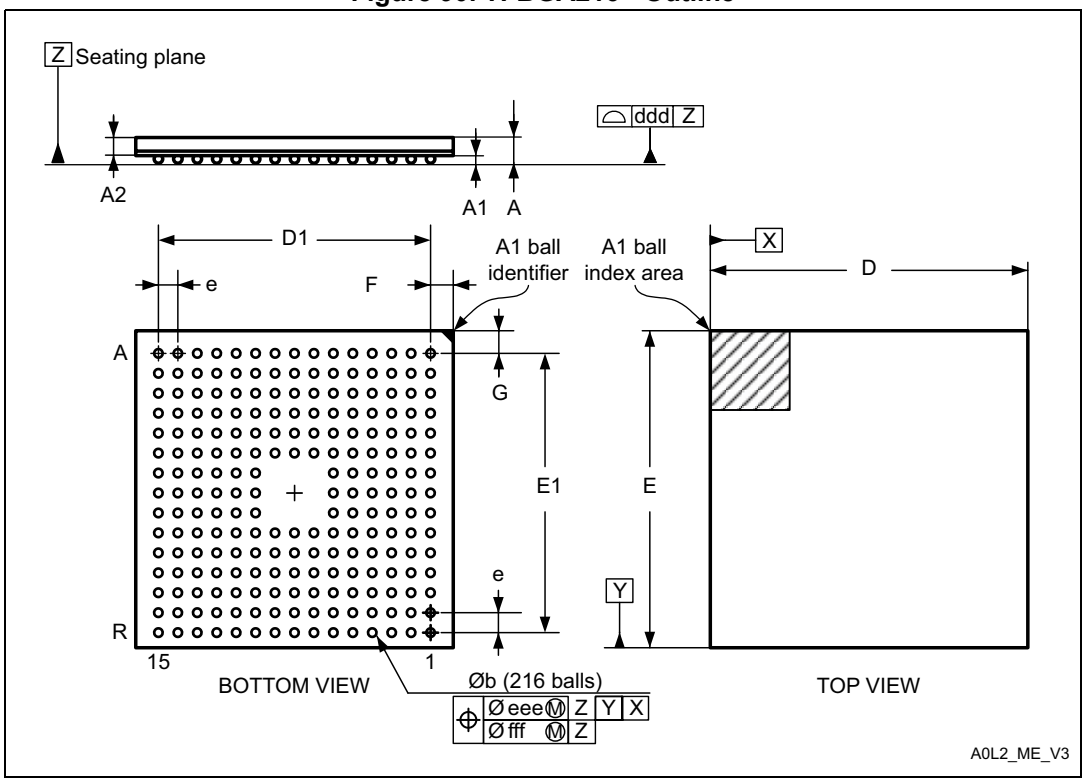

1. Drawing is not to scale.
2. • The terminal A1 corner must be identified on the top surface by using a corner chamfer, ink or metalized markings, or other feature of package body or integral heat slug.
   • A distinguishing feature is allowable on the bottom surface of the package to identify the terminal A1 corner. Exact shape of each corner is optional

Table 172. TFBGA216 - Mechanical data

Symbol	millimeters			inches[1]		
	Min	Typ	Max	Min	Typ	Max
A	-	-	1.200	-	-	0.0472
A1[2]	0.150	-	-	0.0059	-	-
A2	-	0.760	-	-	0.0299	-
b[3]	0.350	0.400	0.450	0.0138	0.0157	0.0177
D	12.850	13.000	13.150	0.5059	0.5118	0.5177
D1	-	11.200	-	-	0.4409	-
E	12.850	13.000	13.150	0.5059	0.5118	0.5177
E1	-	11.200	-	-	0.4409	-
e	-	0.800	-	-	0.0315	-
F	-	0.900	-	-	0.0354	-
G	-	0.900	-	-	0.0354	-
ddd	-	-	0.100	-	-	0.0039
eee[4]	-	-	0.150	-	-	0.0059
fff[5]	-	-	0.080	-	-	0.0031

1. Values in inches are converted from mm and rounded to four decimal digits.
2. • The terminal A1 corner must be identified on the top surface by using a corner chamfer, ink or metallized markings, or other feature of package body or integral heat slug.
   • A distinguishing feature is allowable on the bottom surface of the package to identify the terminal A1 corner. Exact shape of each corner is optional.
3. Initial ball equal 0.350 mm.
4. The tolerance of position that controls the location of the pattern of balls with respect to datums A and B. For each ball there is a cylindrical tolerance zone eee perpendicular to datum C and located on true position with respect to datums A and B as defined by e. The axis perpendicular to datum C of each ball must lie within this tolerance zone.
5. The tolerance of position that controls the location of the balls within the matrix with respect to each other. For each ball there is a cylindrical tolerance zone fff perpendicular to datum C and located on true position as defined by e. The axis perpendicular to datum C of each ball must lie within this tolerance zone. Each tolerance zone fff in the array is contained entirely in the respective zone eee above The axis of each ball must lie simultaneously in both tolerance zones.

Figure 91. TFBGA216 - Footprint example

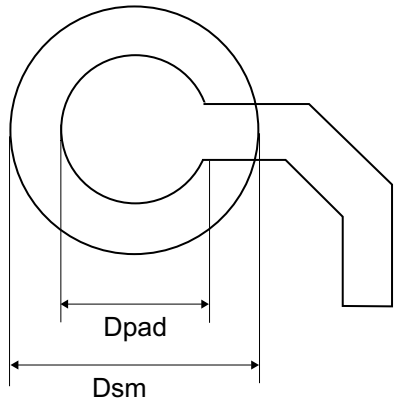

Table 173. TFBGA216 - Example of PCB design rules (0.8 mm pitch)

Dimension	Values
Pitch	0.8 mm
Dpad	0.400 mm
Dsm	0.470 mm typ. (depends on the soldermask registration tolerance)
Stencil opening	0.400 mm
Stencil thickness	Between 0.100 mm and 0.125 mm
Pad trace width	0.120 mm

6.6 Package thermal characteristics

The maximum chip-junction temperature, T_J max, in degrees Celsius, can be calculated using the following equation:

T_J max = T_A max + (P_D max * Θ_{JA})

where:

- T_A max is the maximum ambient temperature in °C.
- Θ_{JA} is the package junction-to-ambient thermal resistance in °C/W.
- P_D max is the sum of P_{INT} max and $P_{I/O}$ max (P_D max = P_{INT} max + $P_{I/O}$ max).
- P_{INT} max is the product of I_{DD} and V_{DD}, expressed in Watts. This is the maximum chip internal power.

$P_{I/O}$ max represents the maximum power dissipation on output pins:

$P_{I/O}$ max = $\sum(V_{OL} * I_{OL}) + \sum((V_{DDIOx} - V_{OH}) * I_{OH})$

taking into account the actual V_{OL}/I_{OL} and V_{OH}/I_{OH} of the I/Os at low and high level in the application.

Table 174. Package thermal characteristics

Symbol	Parameter	Package	Value	Unit
Θ_{JA}	Thermal resistance junction-ambient	LQFP100 14 x 14 mm	31.7	°C/W
		UFBGA144 10 x 10 mm	26.5	
		LQFP144 20 x 20 mm	33.3	
		WLCSP208 5.8 x 5.6 mm	31.1	
		TFBGA216 3 x 13 mm	25.5	
Θ_{JB}	Thermal resistance junction-board	LQFP100 14 x 14 mm	17.6	
		UFBGA144 10 x 10 mm	14.3	
		LQFP144 20 x 20 mm	22.1	
		WLCSP208 5.8 x 5.6 mm	13.2	
		TFBGA216 3 x 13 mm	14.6	
Θ_{JC}	Thermal resistance junction-case	LQFP100 14 x 14 mm	5.6	
		UFBGA144 10 x 10 mm	4.9	
		LQFP144 20 x 20 mm	5.7	
		WLCSP208 5.8 x 5.6 mm	0.8	
		TFBGA216 3 x 13 mm	6.8	

6.6.1 Reference documents

- JESD51-2 Integrated Circuits Thermal Test Method Environment Conditions - Natural Convection (Still Air) available on www.jedec.org.
- For information on thermal management, refer to application note “Guidelines for thermal management on STM32 applications” (AN5036) available on www.st.com.

7 Ordering information

Example: STM32 U 5G9 B J Y 6 Q TR

Device family

STM32 = Arm® based 32-bit microcontroller

Product type

U = ultra-low-power

Device subfamily

5G9 = STM32U5G9xx with USB HS, DSI, and AES hardware encryption

5G7 = STM32U5G7xx with USB HS, and AES hardware encryption

Pin/ball count

V = 100
Z = 144
B = 208
N= 216

Flash memory size

J = 4 Mbytes

Package

J = UFBGA (10 x 10 mm)
T = LQFP
H = TFBGA (13 x 13 mm)
Y = WLCSP

Temperature range

6 = Industrial temperature range, -40 to 85 °C (105 °C junction)

Dedicated pinout

Q = Dedicated pinout supporting SMPS step-down converter

Packing

TR = tape and reel

xxx = programmed parts

For a list of available options (such as speed or package) or for further information on any aspect of this device, contact the nearest ST sales office.

8 Important security notice

The STMicroelectronics group of companies (ST) places a high value on product security, which is why the ST product(s) identified in this documentation may be certified by various security certification bodies and/or may implement our own security measures as set forth herein. However, no level of security certification and/or built-in security measures can guarantee that ST products are resistant to all forms of attacks. As such, it is the responsibility of each of ST's customers to determine if the level of security provided in an ST product meets the customer needs both in relation to the ST product alone, as well as when combined with other components and/or software for the customer end product or application. In particular, take note that:

- ST products may have been certified by one or more security certification bodies, such as Platform Security Architecture (www.psacertified.org) and/or Security Evaluation standard for IoT Platforms (www.trustcb.com). For details concerning whether the ST product(s) referenced herein have received security certification along with the level and current status of such certification, either visit the relevant certification standards website or go to the relevant product page on www.st.com for the most up to date information. As the status and/or level of security certification for an ST product can change from time to time, customers should re-check security certification status/level as needed. If an ST product is not shown to be certified under a particular security standard, customers should not assume it is certified.
- Certification bodies have the right to evaluate, grant and revoke security certification in relation to ST products. These certification bodies are therefore independently responsible for granting or revoking security certification for an ST product, and ST does not take any responsibility for mistakes, evaluations, assessments, testing, or other activity carried out by the certification body with respect to any ST product.
- Industry-based cryptographic algorithms (such as AES, DES, or MD5) and other open standard technologies which may be used in conjunction with an ST product are based on standards which were not developed by ST. ST does not take responsibility for any flaws in such cryptographic algorithms or open technologies or for any methods which have been or may be developed to bypass, decrypt or crack such algorithms or technologies.
- While robust security testing may be done, no level of certification can absolutely guarantee protections against all attacks, including, for example, against advanced attacks which have not been tested for, against new or unidentified forms of attack, or against any form of attack when using an ST product outside of its specification or intended use, or in conjunction with other components or software which are used by customer to create their end product or application. ST is not responsible for resistance against such attacks. As such, regardless of the incorporated security features and/or any information or support that may be provided by ST, each customer is solely responsible for determining if the level of attacks tested for meets their needs, both in relation to the ST product alone and when incorporated into a customer end product or application.
- All security features of ST products (inclusive of any hardware, software, documentation, and the like), including but not limited to any enhanced security features added by ST, are provided on an "AS IS" BASIS. AS SUCH, TO THE EXTENT PERMITTED BY APPLICABLE LAW, ST DISCLAIMS ALL WARRANTIES, EXPRESS OR IMPLIED, INCLUDING BUT NOT LIMITED TO THE IMPLIED WARRANTIES OF MERCHANTABILITY OR FITNESS FOR A PARTICULAR PURPOSE, unless the applicable written and signed contract terms specifically provide otherwise.

9 Revision history

Table 175. Document revision history

Date	Revision	Changes
17-Oct-2023	1	Initial release.
27-Nov-2024	2	Updated: – *Section 3.9.1: Power supply schemes* – *Table 26: STM32U5Gxxx pin/ball definitions* – Notes in *Section 5.2: Absolute maximum ratings* – *Figure 56: NAND controller waveforms for read access* – *Figure 57: NAND controller waveforms for write access* – *Figure 74: USART timing diagram in SPI master mode* – *Figure 75: USART timing diagram in SPI slave mode* – *Table 78: Low-speed external user clock characteristics* – *Table 101: NRST pin characteristics* – Master/slave terminology into “Controller/target” for I2C Added: – *Sustainable technology logo in Features* – *Figure 25: HSI16 frequency versus temperature and V_{DD}* – *SPI mode in Table 22: USART, UART, and LPUART features, Section 3.52.1: Universal synchronous/asynchronous receiver transmitter (USART/UART), and Section 5.3.41: USART (SPI mode) characteristics*
31-Mar-2025	3	Updated *Table 2: STM32U5Gxxx features and peripheral counts*. Updated *Figure 3: Power-up /down sequence*. Updated *Table 26: STM32U5Gxxx pin/ball definitions*. Updated *Table 27: Alternate function AF0 to AF7*. Updated *Table 28: Alternate function AF8 to AF15*. Updated *Table 77: High-speed external user clock characteristics*. Updated *Table 79: HSE oscillator characteristics*. Updated *Figure 29: Recommended NRST pin protection*. Updated *Figure 52: Synchronous multiplexed NOR/PSRAM read timings*. Updated *Figure 54: Synchronous non-multiplexed NOR/PSRAM read timings*. Added *Section 6.1: Device marking* and suppressed corresponding information from the package description sections.
3-Nov-2025	4	Updated *Table 133: WWDG min/max timeout value at 160 MHz (PCLK)* Updated *Table 2: STM32U5Gxxx features and peripheral counts* Updated *Table 111: Temperature sensor characteristics* Updated *Figure 27: I/O input characteristics (all I/Os except FT_c)* title

IMPORTANT NOTICE – READ CAREFULLY

STMicroelectronics NV and its subsidiaries (“ST”) reserve the right to make changes, corrections, enhancements, modifications, and improvements to ST products and/or to this document at any time without notice. Purchasers should obtain the latest relevant information on ST products before placing orders. ST products are sold pursuant to ST’s terms and conditions of sale in place at the time of order acknowledgment.

Purchasers are solely responsible for the choice, selection, and use of ST products and ST assumes no liability for application assistance or the design of purchasers’ products.

No license, express or implied, to any intellectual property right is granted by ST herein.

Resale of ST products with provisions different from the information set forth herein shall void any warranty granted by ST for such product.

ST and the ST logo are trademarks of ST. For additional information about ST trademarks, refer to www.st.com/trademarks. All other product or service names are the property of their respective owners.

Information in this document supersedes and replaces information previously supplied in any prior versions of this document.

© 2025 STMicroelectronics – All rights reserved