STM32F777xx STM32F778Ax STM32F779xx

Arm® Cortex®-M7 32b MCU+FPU, 462DMIPS, up to 2 MB flash, 512+16+4KB RAM, crypto, USB OTG HS/FS, 28 com IF, LCD, DSI

Datasheet - production data

Features

- Includes ST state-of-the-art patented technology
- Core: Arm® 32-bit Cortex®-M7 CPU with DPFPU, ART Accelerator and L1-cache: 16 Kbytes I/D cache, allowing 0-wait state execution from embedded flash memory and external memories, up to 216 MHz, MPU, 462 DMIPS/2.14 DMIPS/MHz (Dhrystone 2.1), and DSP instructions.
- Memories
  - Up to 2 Mbytes of flash memory, organized into two banks allowing read-while-write
  - SRAM: 512 Kbytes (including 128 Kbytes of data TCM RAM for critical real-time data) + 16 Kbytes of instruction TCM RAM (for critical real-time routines) + 4 Kbytes of backup
  - Flexible external memory controller with up to 32-bit data bus: SRAM, PSRAM, SDRAM/LPSDR SDRAM, NOR/NAND memories
- Dual mode Quad-SPI
- Graphics
  - Chrom-ART Accelerator (DMA2D), graphical hardware accelerator enabling enhanced graphical user interface
  - Hardware JPEG codec
  - LCD-TFT controller supporting up to XGA resolution
  - MIPI® DSI host controller supporting up to 720p 30 Hz resolution
- Clock, reset and supply management
  - 1.7 to 3.6 V application supply and I/Os
  - POR, PDR, PVD and BOR
  - Dedicated USB power
  - 4-to-26 MHz crystal oscillator
  - Internal 16 MHz factory-trimmed RC (1% accuracy)

LQFP100 (14 × 14 mm)	UFBGA176 (10 x 10 mm)	WLCSP180 (0.4 mm pitch)
LQFP144 (20 × 20 mm)	TFBGA216 (13 x 13 mm)	
LQFP176 (24 × 24 mm)	TFBGA100 (8 x 8 mm)	
LQFP208 (28 x 28 mm)		

  - 32 kHz oscillator for RTC with calibration
  - Internal 32 kHz RC with calibration
- Low-power
  - Sleep, Stop and Standby modes
  - V_{BAT} supply for RTC, 32×32 bit backup registers + 4 Kbytes backup SRAM
- 3×12-bit, 2.4 MSPS ADC: up to 24 channels
- Digital filters for sigma delta modulator (DFSDM), 8 channels / 4 filters
- 2×12-bit D/A converters
- General-purpose DMA: 16-stream DMA controller with FIFOs and burst support
- Up to 18 timers: up to thirteen 16-bit (1x low-power 16-bit timer available in Stop mode) and two 32-bit timers, each with up to four IC/OC/PWM or pulse counter and quadrature (incremental) encoder input. All 15 timers running up to 216 MHz. 2x watchdogs, SysTick timer
- Debug mode
  - SWD and JTAG interfaces
  - Cortex®-M7 Trace Macrocell™
- Up to 168 I/O ports with interrupt capability
  - Up to 164 fast I/Os up to 108 MHz
  - Up to 166 5 V-tolerant I/Os

This is information on a product in full production. www.st.com

- Up to 28 communication interfaces
  - Up to four I^2C interfaces (SMBus/PMBus)
  - Up to four USARTs/4 UARTs (12.5 Mbit/s, ISO7816 interface, LIN, IrDA, modem control)
  - Up to six SPIs (up to 54 Mbit/s), three with muxed simplex I^2S for audio
  - 2 x SAIs (serial audio interface)
  - 3 × CANs (2.0B Active) and 2x SDMMCs
  - SPDIFRX interface
  - HDMI-CEC
  - MDIO slave interface
- Advanced connectivity
  - USB 2.0 full-speed device/host/OTG controller with on-chip PHY
  - USB 2.0 high-speed/full-speed device/host/OTG controller with dedicated DMA, on-chip full-speed PHY and ULPI
  - 10/100 Ethernet MAC with dedicated DMA: supports IEEE 1588v2 hardware, MII/RMII
- 8- to 14-bit camera interface, up to 54 Mbyte/s
- Cryptographic acceleration: hardware acceleration for AES 128, 192, 256, triple DES, HASH (MD5, SHA-1, SHA-2), and HMAC
- True random number generator (RNG).
- CRC calculation unit
- RTC: subsecond accuracy, hardware calendar
- 96-bit unique ID
- All packages are ECOPACK2 compliant

Table 1. Device summary

Reference	Part number
STM32F777xx	STM32F777BI, STM32F777II, STM32F777NI, STM32F777VI, STM32F777ZI
STM32F778Ax	STM32F778AI
STM32F779xx	STM32F779AI, STM32F779BI, STM32F779II, STM32F779NI

Contents

1 Introduction 14

2 Description 15

3 Functional overview 21

3.1 Arm® Cortex®-M7 with FPU 21
3.2 Memory protection unit 21
3.3 Embedded flash memory 22
3.4 CRC (cyclic redundancy check) calculation unit 22
3.5 Embedded SRAM 22
3.6 AXI-AHB bus matrix 22
3.7 DMA controller (DMA) 24
3.8 Flexible memory controller (FMC) 25
3.9 Quad-SPI memory interface (QUADSPI) 25
3.10 LCD-TFT controller 26
3.11 Chrom-ART Accelerator (DMA2D) 26
3.12 Nested vectored interrupt controller (NVIC) 26
3.13 JPEG codec (JPEG) 27
3.14 External interrupt/event controller (EXTI) 27
3.15 Clocks and startup 27
3.16 Boot modes 28
3.17 Power supply schemes 28
3.18 Power supply supervisor 30
3.18.1 Internal reset ON 30
3.18.2 Internal reset OFF 31
3.19 Voltage regulator 32
3.19.1 Regulator ON 32
3.19.2 Regulator OFF 33
3.19.3 Regulator ON/OFF and internal reset ON/OFF availability 36
3.20 Real-time clock (RTC), backup SRAM and backup registers 36
3.21 Low-power modes 37
3.22 V_{BAT} operation 38

3.23 Timers and watchdogs 38
3.23.1 Advanced-control timers (TIM1, TIM8) 40
3.23.2 General-purpose timers (TIMx) 40
3.23.3 Basic timers TIM6 and TIM7 40
3.23.4 Low-power timer (LPTIM1) 41
3.23.5 Independent watchdog 41
3.23.6 Window watchdog 41
3.23.7 SysTick timer 41
3.24 Inter-integrated circuit interface (I^2C) 42
3.25 Universal synchronous/asynchronous receiver transmitters (USART) . . 43
3.26 Serial peripheral interface (SPI)/inter- integrated sound interfaces (I2S) . 44
3.27 Serial audio interface (SAI) 44
3.28 SPDIFRX Receiver Interface (SPDIFRX) 45
3.29 Audio PLL (PLLI2S) 45
3.30 Audio and LCD PLL (PLLSAI) 45
3.31 SD/SDIO/MMC card host interface (SDMMC) 46
3.32 Ethernet MAC interface with dedicated DMA and IEEE 1588 support . . . 46
3.33 Controller area network (bxCAN) 47
3.34 Universal serial bus on-the-go full-speed (OTG_FS) 47
3.35 Universal serial bus on-the-go high-speed (OTG_HS) 47
3.36 High-definition multimedia interface (HDMI) - consumer electronics control (CEC) 48
3.37 Digital camera interface (DCMI) 48
3.38 Management Data Input/Output (MDIO) slaves 49
3.39 Cryptographic acceleration 49
3.40 True random number generator (RNG) 49
3.41 General-purpose input/outputs (GPIOs) 50
3.42 Analog-to-digital converters (ADCs) 50
3.43 Digital filter for Sigma-Delta Modulators (DFSDM) 50
3.44 Temperature sensor 52
3.45 Digital-to-analog converter (DAC) 52
3.46 Serial wire JTAG debug port (SWJ-DP) 52
3.47 Embedded Trace Macrocell™ 52
3.48 DSI Host (DSIHOST) 53

4 Pinouts and pin description 55

5 Memory mapping 103

6 Electrical characteristics 104

6.1 Parameter conditions 104

6.1.1 Minimum and maximum values 104

6.1.2 Typical values 104

6.1.3 Typical curves 104

6.1.4 Loading capacitor 104

6.1.5 Pin input voltage 104

6.1.6 Power supply scheme 105

6.1.7 Current consumption measurement 107

6.2 Absolute maximum ratings 107

6.3 Operating conditions 109

6.3.1 General operating conditions 109

6.3.2 VCAP1/VCAP2 external capacitor 111

6.3.3 Operating conditions at power-up / power-down (regulator ON) 112

6.3.4 Operating conditions at power-up / power-down (regulator OFF) 112

6.3.5 Reset and power control block characteristics 112

6.3.6 Over-drive switching characteristics 114

6.3.7 Supply current characteristics 114

6.3.8 Wakeup time from low-power modes 133

6.3.9 External clock source characteristics 134

6.3.10 Internal clock source characteristics 139

6.3.11 PLL characteristics 141

6.3.12 PLL spread spectrum clock generation (SSCG) characteristics 143

6.3.13 MIPI D-PHY characteristics 145

6.3.14 MIPI D-PHY PLL characteristics 148

6.3.15 MIPI D-PHY regulator characteristics 149

6.3.16 Memory characteristics 150

6.3.17 EMC characteristics 153

6.3.18 Absolute maximum ratings (electrical sensitivity) 155

6.3.19 I/O current injection characteristics 155

6.3.20 I/O port characteristics 156

6.3.21 NRST pin characteristics 162

6.3.22 TIM timer characteristics 163

6.3.23 RTC characteristics 164
6.3.24 12-bit ADC characteristics 164
6.3.25 Temperature sensor characteristics 170
6.3.26 V_{BAT} monitoring characteristics 170
6.3.27 Reference voltage 170
6.3.28 DAC electrical characteristics 171
6.3.29 Communications interfaces 173
6.3.30 FMC characteristics 190
6.3.31 Quad-SPI interface characteristics 209
6.3.32 Camera interface (DCMI) timing specifications 212
6.3.33 LCD-TFT controller (LTDC) characteristics 213
6.3.34 Digital filter for Sigma-Delta Modulators (DFSDM) characteristics . . . 215
6.3.35 DFSDM timing diagrams 217
6.3.36 SD/SDIO MMC card host interface (SDMMC) characteristics 218

7 Package information 220
7.1 Device marking 220
7.2 LQFP100 package information (1L) 221
7.3 TFBGA100 package information (A08Q) 224
7.4 LQFP144 package information (1A) 227
7.5 LQFP176 package information (1T) 231
7.6 UFBGA(176+25) package information (A0E7) 235
7.7 WLCSP package information (A05G) 237
7.8 LQFP208 package information (UH) 240
7.9 TFBGA216 package information (A0L2) 243
7.10 Thermal characteristics 246

8 Ordering information 247

Appendix A Recommendations when using internal reset OFF 249
A.1 Operating conditions 249

Important security notice 250

Revision history 251

List of tables

Table 1. Device summary . . . 2
Table 2. STM32F777xx, STM32F778Ax and STM32F779xx features and peripheral counts . . . 17
Table 3. Voltage regulator configuration mode versus device operating mode . . . 33
Table 4. Regulator ON/OFF and internal reset ON/OFF availability . . . 36
Table 5. Voltage regulator modes in stop mode . . . 37
Table 6. Timer feature comparison . . . 39
Table 7. I2C implementation . . . 42
Table 8. USART implementation . . . 43
Table 9. DFSDM implementation . . . 51
Table 10. Legend/abbreviations used in the pinout table . . . 66
Table 11. STM32F777xx, STM32F778Ax and STM32F779xx pin and ball definitions . . . 66
Table 12. FMC pin definition . . . 86
Table 13. STM32F777xx, STM32F778Ax and STM32F779xx alternate function mapping . . . 89
Table 14. Voltage characteristics . . . 107
Table 15. Current characteristics . . . 108
Table 16. Thermal characteristics . . . 108
Table 17. General operating conditions . . . 109
Table 18. Limitations depending on the operating power supply range . . . 111
Table 19. VCAP1/VCAP2 operating conditions . . . 112
Table 20. Operating conditions at power-up / power-down (regulator ON) . . . 112
Table 21. Operating conditions at power-up / power-down (regulator OFF) . . . 112
Table 22. Reset and power control block characteristics . . . 113
Table 23. Over-drive switching characteristics . . . 114
Table 24. Typical and maximum current consumption in Run mode, code with data processing running from ITCM RAM, regulator ON . . . 115
Table 25. Typical and maximum current consumption in Run mode, code with data processing running from flash memory (Single bank mode, ART ON except prefetch / L1-cache ON) or SRAM on AXI (L1-cache ON), regulator ON . . . 116
Table 26. Typical and maximum current consumption in Run mode, code with data processing running from flash memory (Dual bank mode, ART ON except prefetch / L1-cache ON), regulator ON . . . 117
Table 27. Typical and maximum current consumption in Run mode, code with data processing running from flash memory (Single bank mode) or SRAM on AXI (L1-cache disabled), regulator ON . . . 118
Table 28. Typical and maximum current consumption in Run mode, code with data processing running from flash memory (Dual bank mode), regulator ON . . . 119
Table 29. Typical and maximum current consumption in Run mode, code with data processing running from flash memory (Single bank mode) on ITCM interface (ART disabled), regulator ON . . . 120
Table 30. Typical and maximum current consumption in Run mode, code with data processing running from flash memory (Dual bank mode) on ITCM interface (ART disabled), regulator ON . . . 121
Table 31. Typical and maximum current consumption in Run mode, code with data processing running from flash memory (Single bank mode, ART ON except prefetch / L1-cache ON) or SRAM on AXI (L1-cache ON), regulator OFF . . . 122
Table 32. Typical and maximum current consumption in Run mode, code with data processing

running from flash memory (Dual bank mode, ART ON except prefetch / L1-cache ON) or SRAM on AXI (L1-cache ON), regulator OFF. . . . 122
Table 33. Typical and maximum current consumption in Sleep mode, regulator ON. . . . 123
Table 34. Typical and maximum current consumption in Sleep mode, regulator OFF. . . . 124
Table 35. Typical and maximum current consumptions in Stop mode . . . 124
Table 36. Typical and maximum current consumptions in Standby mode . . . 125
Table 37. Typical and maximum current consumptions in V_{BAT} mode. . . . 126
Table 38. Switching output I/O current consumption . . . 128
Table 39. Peripheral current consumption . . . 130
Table 40. Low-power mode wakeup timings . . . 133
Table 41. High-speed external user clock characteristics. . . . 134
Table 42. Low-speed external user clock characteristics . . . 135
Table 43. HSE 4-26 MHz oscillator characteristics. . . . 136
Table 44. LSE oscillator characteristics (f_{LSE} = 32.768 kHz) . . . 137
Table 45. HSI oscillator characteristics . . . 139
Table 46. LSI oscillator characteristics . . . 140
Table 47. Main PLL characteristics. . . . 141
Table 48. PLLI2S characteristics . . . 142
Table 49. PLLISAI characteristics. . . . 142
Table 50. SSCG parameters constraint . . . 143
Table 51. MIPI D-PHY characteristics . . . 145
Table 52. MIPI D-PHY AC characteristics LP mode and HS/LP transitions . . . 146
Table 53. DSI-PLL characteristics . . . 148
Table 54. DSI regulator characteristics. . . . 149
Table 55. Flash memory characteristics . . . 150
Table 56. Flash memory programming (single bank configuration nDBANK=1) . . . 150
Table 57. Flash memory programming (dual bank configuration nDBANK=0) . . . 151
Table 58. Flash memory programming with VPP . . . 152
Table 59. Flash memory endurance and data retention . . . 152
Table 60. EMS characteristics . . . 153
Table 61. EMI characteristics for fHSE= 8 MHz and fCPU= 200MHz (Setting 1). . . . 154
Table 62. EMI characteristics for fHSE= 8 MHz and fCPU= 200MHz (Setting 2). . . . 154
Table 63. ESD absolute maximum ratings . . . 155
Table 64. Electrical sensitivities . . . 155
Table 65. I/O current injection susceptibility . . . 156
Table 66. I/O static characteristics . . . 156
Table 67. Output voltage characteristics . . . 159
Table 68. I/O AC characteristics . . . 160
Table 69. NRST pin characteristics . . . 162
Table 70. TIMx characteristics . . . 163
Table 71. RTC characteristics . . . 164
Table 72. ADC characteristics . . . 164
Table 73. ADC static accuracy at f_{ADC} = 18 MHz. . . . 166
Table 74. ADC static accuracy at f_{ADC} = 30 MHz. . . . 166
Table 75. ADC static accuracy at f_{ADC} = 36 MHz. . . . 166
Table 76. ADC dynamic accuracy at f_{ADC} = 18 MHz - limited test conditions . . . 166
Table 77. ADC dynamic accuracy at f_{ADC} = 36 MHz - limited test conditions . . . 167
Table 78. Temperature sensor characteristics . . . 170
Table 79. Temperature sensor calibration values. . . . 170

Table 80. V_{BAT} monitoring characteristics . . . 170
Table 81. internal reference voltage . . . 170
Table 82. Internal reference voltage calibration values . . . 171
Table 83. DAC characteristics . . . 171
Table 84. Minimum I2CCLK frequency in all I2C modes . . . 174
Table 85. I2C analog filter characteristics. . . . 174
Table 86. SPI dynamic characteristics . . . 175
Table 87. I^2S dynamic characteristics . . . 178
Table 88. Dynamics characteristics: JTAG characteristics. . . . 180
Table 89. Dynamics characteristics: SWD characteristics . . . 181
Table 90. SAI characteristics . . . 182
Table 91. USB OTG full speed startup time . . . 184
Table 92. USB OTG full speed DC electrical characteristics . . . 184
Table 93. USB OTG full speed electrical characteristics . . . 185
Table 94. USB HS DC electrical characteristics. . . . 186
Table 95. USB HS clock timing parameters . . . 186
Table 96. Dynamic characteristics: USB ULPI . . . 187
Table 97. Dynamics characteristics: Ethernet MAC signals for SMI. . . . 188
Table 98. Dynamics characteristics: Ethernet MAC signals for RMII . . . 189
Table 99. Dynamics characteristics: Ethernet MAC signals for MII . . . 189
Table 100. MDIO Slave timing parameters. . . . 190
Table 101. Asynchronous non-multiplexed SRAM/PSRAM/NOR read timings . . . 192
Table 102. Asynchronous non-multiplexed SRAM/PSRAM/NOR read - NWAIT timings . . . 192
Table 103. Asynchronous non-multiplexed SRAM/PSRAM/NOR write timings . . . 193
Table 104. Asynchronous non-multiplexed SRAM/PSRAM/NOR write - NWAIT timings. . . . 194
Table 105. Asynchronous multiplexed PSRAM/NOR read timings. . . . 195
Table 106. Asynchronous multiplexed PSRAM/NOR read-NWAIT timings . . . 195
Table 107. Asynchronous multiplexed PSRAM/NOR write timings . . . 196
Table 108. Asynchronous multiplexed PSRAM/NOR write-NWAIT timings . . . 197
Table 109. Synchronous multiplexed NOR/PSRAM read timings . . . 199
Table 110. Synchronous multiplexed PSRAM write timings. . . . 201
Table 111. Synchronous non-multiplexed NOR/PSRAM read timings. . . . 202
Table 112. Synchronous non-multiplexed PSRAM write timings . . . 204
Table 113. Switching characteristics for NAND flash read cycles . . . 205
Table 114. Switching characteristics for NAND flash write cycles . . . 206
Table 115. SDRAM read timings . . . 207
Table 116. LPSDR SDRAM read timings . . . 207
Table 117. SDRAM write timings . . . 208
Table 118. LPSDR SDRAM write timings. . . . 209
Table 119. QUADSPI characteristics in SDR mode . . . 210
Table 120. QUADSPI characteristics in DDR mode . . . 210
Table 121. DCMI characteristics. . . . 212
Table 122. LTDC characteristics . . . 213
Table 123. DFSDM measured timing 1.71-3.6V. . . . 215
Table 124. Dynamic characteristics: SD / MMC characteristics, VDD=2.7V to 3.6V . . . 219
Table 125. Dynamic characteristics: eMMC characteristics, VDD=1.71V to 1.9V . . . 219
Table 126. LQFP100 - Mechanical data . . . 222
Table 127. TFBGA100 - Mechanical data . . . 225
Table 128. TFBGA100 - Example of PCB design rules (0.8 mm pitch BGA) . . . 226
Table 129. LQFP144 - Mechanical data . . . 228
Table 130. LQFP176 - Mechanical data . . . 232
Table 131. UFBGA(176+25) - Mechanical data . . . 235

Table 132. UFBGA(176+25) - Example of PCB design rules (0.65 mm pitch BGA) 236
Table 133. WLCSP 180-bump, 5.5 x 6 mm, 0.4 mm pitch wafer level chip scale package mechanical data 237
Table 134. WLCSP 180-bump, 5.5 x 6 mm, recommended PCB design rules (0.4 mm pitch) 238
Table 135. LQFP208 - Mechanical data 241
Table 136. TFBGA216 - Mechanical data 244
Table 137. TFBGA216 - Example of PCB design rules (0.8 mm pitch) 245
Table 138. Package thermal characteristics 246
Table 139. Ordering information scheme 247
Table 140. Limitations depending on the operating power supply range 249
Table 141. Document revision history 251

List of figures

Figure 1. Compatible board design for LQFP100 package . . . 19
Figure 2. STM32F777xx, STM32F778Ax and STM32F779xx block diagram . . . 20
Figure 3. STM32F777xx, STM32F778Ax and STM32F779xx AXI-AHB bus matrix architecture(1) . . . 23
Figure 4. VDDUSB connected to VDD power supply . . . 29
Figure 5. VDDUSB connected to external power supply . . . 30
Figure 6. Power supply supervisor interconnection with internal reset OFF . . . 31
Figure 7. PDR_ON control with internal reset OFF . . . 32
Figure 8. Regulator OFF . . . 34
Figure 9. Startup in regulator OFF: slow V_{DD} slope - power-down reset risen after V_{CAP_1},V_{CAP_2} stabilization . . . 35
Figure 10. Startup in regulator OFF mode: fast V_{DD} slope - power-down reset risen before V_{CAP_1},V_{CAP_2} stabilization . . . 35
Figure 11. STM32F77xxx LQFP100 pinout . . . 55
Figure 12. STM32F77xxx TFBGA100 ballout . . . 56
Figure 13. STM32F77xxx LQFP144 pinout . . . 57
Figure 14. STM32F77xxx LQFP176 pinout . . . 58
Figure 15. STM32F779xx LQFP176 pinout . . . 59
Figure 16. STM32F77xxx UFBGA176 ballout . . . 60
Figure 17. STM32F779Ax/STM32F778Ax WLCSP180 ballout . . . 61
Figure 18. STM32F77xxx LQFP208 pinout . . . 62
Figure 19. STM32F779xx LQFP208 pinout . . . 63
Figure 20. STM32F77xxx TFBGA216 ballout . . . 64
Figure 21. STM32F779xx TFBGA216 ballout . . . 65
Figure 22. Pin loading conditions . . . 104
Figure 23. Pin input voltage . . . 104
Figure 24. STM32F769xx/STM32F779xx power supply scheme . . . 105
Figure 25. STM32F765xx/STM32F767xx/STM32F777xx power supply scheme . . . 106
Figure 26. Current consumption measurement scheme . . . 107
Figure 27. External capacitor C_{EXT} . . . 111
Figure 28. High-speed external clock source AC timing diagram . . . 135
Figure 29. Low-speed external clock source AC timing diagram . . . 136
Figure 30. Typical application with an 8 MHz crystal . . . 137
Figure 31. Typical application with a 32.768 kHz crystal . . . 138
Figure 32. ACCHSI versus temperature . . . 139
Figure 33. LSI deviation versus temperature . . . 140
Figure 34. PLL output clock waveforms in center spread mode . . . 144
Figure 35. PLL output clock waveforms in down spread mode . . . 145
Figure 36. MIPI D-PHY HS/LP clock lane transition timing diagram . . . 148
Figure 37. MIPI D-PHY HS/LP data lane transition timing diagram . . . 148
Figure 38. FT I/O input characteristics . . . 158
Figure 39. I/O AC characteristics definition . . . 162
Figure 40. Recommended NRST pin protection . . . 163
Figure 41. ADC accuracy characteristics . . . 167
Figure 42. Typical connection diagram when using the ADC with FT/TT pins featuring analog switch function . . . 168
Figure 43. Power supply and reference decoupling (V_{REF+} not connected to V_{DDA}) . . . 169
Figure 44. Power supply and reference decoupling (V_{REF+} connected to V_{DDA}) . . . 169

Figure 45. 12-bit buffered /non-buffered DAC . . . 173
Figure 46. SPI timing diagram - slave mode and CPHA = 0 . . . 176
Figure 47. SPI timing diagram - slave mode and CPHA = 1 . . . 177
Figure 48. SPI timing diagram - master mode . . . 177
Figure 49. I^2S slave timing diagram (Philips protocol)(1) . . . 179
Figure 50. I^2S master timing diagram (Philips protocol)(1) . . . 179
Figure 51. JTAG timing diagram . . . 181
Figure 52. SWD timing diagram . . . 182
Figure 53. SAI master timing waveforms . . . 183
Figure 54. SAI slave timing waveforms . . . 184
Figure 55. USB OTG full speed timings: definition of data signal rise and fall time . . . 185
Figure 56. ULPI timing diagram . . . 187
Figure 57. Ethernet SMI timing diagram . . . 188
Figure 58. Ethernet RMII timing diagram . . . 188
Figure 59. Ethernet MII timing diagram . . . 189
Figure 60. MDIO Slave timing diagram . . . 190
Figure 61. Asynchronous non-multiplexed SRAM/PSRAM/NOR read waveforms . . . 191
Figure 62. Asynchronous non-multiplexed SRAM/PSRAM/NOR write waveforms . . . 193
Figure 63. Asynchronous multiplexed PSRAM/NOR read waveforms . . . 194
Figure 64. Asynchronous multiplexed PSRAM/NOR write waveforms . . . 196
Figure 65. Synchronous multiplexed NOR/PSRAM read timings . . . 198
Figure 66. Synchronous multiplexed PSRAM write timings . . . 200
Figure 67. Synchronous non-multiplexed NOR/PSRAM read timings . . . 202
Figure 68. Synchronous non-multiplexed PSRAM write timings . . . 203
Figure 69. NAND controller waveforms for read access . . . 205
Figure 70. NAND controller waveforms for write access . . . 205
Figure 71. SDRAM read access waveforms (CL = 1) . . . 206
Figure 72. SDRAM write access waveforms . . . 208
Figure 73. Quad-SPI timing diagram - SDR mode . . . 211
Figure 74. Quad-SPI timing diagram - DDR mode . . . 211
Figure 75. DCMI timing diagram . . . 212
Figure 76. LCD-TFT horizontal timing diagram . . . 214
Figure 77. LCD-TFT vertical timing diagram . . . 214
Figure 78. Channel transceiver timing diagrams . . . 217
Figure 79. SDIO high-speed mode . . . 218
Figure 80. SD default mode . . . 218
Figure 81. LQFP100 - Outline(15) . . . 221
Figure 82. LQFP100 - Footprint example . . . 223
Figure 83. TFBGA100 - Outline(13) . . . 224
Figure 84. TFBGA100 - Footprint example . . . 226
Figure 85. LQFP144 - Outline(15) . . . 227
Figure 86. LQFP144 - Footprint example . . . 230
Figure 87. LQFP176 - Outline(15) . . . 231
Figure 88. LQFP176 - Footprint example . . . 234
Figure 89. UFBGA(176+25) - Outline . . . 235
Figure 90. UFBGA(176+25) - Footprint example . . . 236
Figure 91. WLCSP 180-bump, 5.5 x 6 mm, 1.27 mm pitch wafer level chip scale package outline . . . 237
Figure 92. WLCSP 180-bump, 5.5 x 6 mm, 0.4 mm pitch wafer level chip scale package recommended footprint . . . 238
Figure 93. WLCSP180 top view example . . . 239
Figure 94. LQFP208 - Outline(15) . . . 240

Figure 95. LQFP208 - footprint example 242
Figure 96. TFBGA216 - Outline 243
Figure 97. TFBGA216 - Footprint example 245

1 Introduction

This document provides information on STM32F777xx, STM32F778Ax and STM32F779xx microcontrollers, such as description, functional overview, pin assignment and definition, electrical characteristics, packaging, and ordering information.

This document must be read in conjunction with the reference manual (RM0410) and the device errata sheet (ES0334), available from the STMicroelectronics website *www.st.com*.

For information on the Arm®[a] Cortex®-M7 core, refer to the Cortex®-M7 Technical Reference Manual, available from the http://www.arm.com website.

a. Arm is a registered trademark of Arm Limited (or its subsidiaries) in the US and/or elsewhere.

2 Description

The STM32F777xx, STM32F778Ax and STM32F779xx devices are based on the high-performance Arm® Cortex®-M7 32-bit RISC core operating at up to 216 MHz frequency. The Cortex®-M7 core features a floating point unit (FPU), which supports Arm® double-precision and single-precision data-processing instructions and data types. It also implements a full set of DSP instructions and a memory protection unit (MPU), which enhances the application security.

The STM32F777xx, STM32F778Ax and STM32F779xx devices incorporate high-speed embedded memories with a flash up to 2 Mbytes, 512 Kbytes of SRAM (including 128 Kbytes of Data TCM RAM for critical real-time data), 16 Kbytes of instruction TCM RAM (for critical real-time routines), 4 Kbytes of backup SRAM available in the lowest power modes, and an extensive range of enhanced I/Os and peripherals connected to two APB buses, two AHB buses, a 32-bit multi-AHB bus matrix, and a multi layer AXI interconnect supporting internal and external memories access.

The devices offer three 12-bit ADCs, two DACs, a low-power RTC, twelve general-purpose 16-bit timers including two PWM timers for motor control, two general-purpose 32-bit timers, a true random number generator (RNG), and a cryptographic acceleration cell. They also feature standard and advanced communication interfaces.

- Up to four I2Cs.
- Six SPIs, three I2Ss in half-duplex mode. To achieve audio class accuracy, the I2S peripherals can be clocked via a dedicated internal audio PLL or via an external clock to allow synchronization.
- Four USARTs plus four UARTs.
- An USB OTG full-speed and a USB OTG high-speed with full-speed capability (with the ULPI).
- Three CANs.
- Two SAI serial audio interfaces.
- Two SDMMC host interfaces.
- Ethernet and camera interfaces.
- LCD-TFT display controller.
- Chrom-ART Accelerator.
- SPDIFRX interface.
- HDMI-CEC.

Advanced peripherals include two SDMMC interfaces, a flexible memory control (FMC) interface, a Quad-SPI flash memory interface, a camera interface for CMOS sensors and a cryptographic acceleration cell.

The STM32F777xx, STM32F778Ax and STM32F779xx devices operate in the –40 to +105 °C temperature range from a 1.7 to 3.6 V power supply. Dedicated supply inputs for USB (OTG_FS and OTG_HS) and SDMMC2 (clock, command and 4-bit data) are available on all the packages except LQFP100 for a greater power supply choice.

The supply voltage can drop to 1.7 V with the use of an external power supply supervisor. A comprehensive set of power-saving mode allows the design of low-power applications.

The STM32F777xx, STM32F778Ax and STM32F779xx devices offer devices in 11 packages ranging from 100 pins to 216 pins. The set of included peripherals changes with the device chosen.

These features make the STM32F777xx, STM32F778Ax and STM32F779xx microcontrollers suitable for a wide range of applications.

- Motor drive and application control
- Medical equipment
- Industrial applications: PLC, inverters, circuit breakers
- Printers, and scanners
- Alarm systems, video intercom, and HVAC
- Home audio appliances
- Mobile applications, Internet of Things
- Wearable devices: smartwatches

The following table lists the peripherals available on each part number.

Table 2. STM32F777xx, STM32F778Ax and STM32F779xx features and peripheral counts

Peripherals		STM32F77xVx		STM32F77xZx		STM32F779Ax		STM32F778Ax	STM32F77xIx		STM32F77xBx		STM32F77xNx	
Flash memory in Kbytes		1024	2048	1024	2048	1024	2048	2048	1024	2048	1024	2048	1024	2048
SRAM in Kbytes	System	512(368+16+128)												
	Instruction	16												
	Backup	4												
FMC memory controller		Yes(1)												
Quad-SPI		Yes												
Ethernet		Yes				No			Yes					
Timers	General-purpose	10												
	Advanced-control	2												
	Basic	2												
	Low-power	1												
Random number generator		Yes												
Communication interfaces	SPI / I^2S	4/3 (simplex)(2)		6/3 (simplex)(2)										
	I^2C	4												
	USART/UART	4/4												
	USB OTG FS	Yes												
	USB OTG HS	Yes												
	CAN	3												
	SAI	2												
	SPDIFRX	4 inputs												
	SDMMC1	Yes												
	SDMMC2	Yes(3)												
Camera interface		Yes												
MIPI-DSI Host(4)		No				Yes								
LCD-TFT		Yes												
Chrom-ART Accelerator™ (DMA2D)		Yes												
JPEG codec		Yes												
Cryptography		Yes												

Table 2. STM32F777xx, STM32F778Ax and STM32F779xx features and peripheral counts (continued)

Peripherals	STM32F77xVx	STM32F77xZx	STM32F779Ax	STM32F778Ax	STM32F77xIx	STM32F77xBx	STM32F77xNx
GPIOs	82	114	128		132	159	
DFSDM1	Yes (4 filters)						
12-bit ADC	3						
Number of channels	16	24					
12-bit DAC Number of channels	Yes 2						
Maximum CPU frequency	216 MHz(5)						
Operating voltage	1.7 to 3.6 V(6)						
Operating temperatures	Ambient temperatures: –40 to +85 °C /–40 to +105 °C(7)						
	Junction temperature: –40 to + 125 °C						
Package	LQFP100 TFBGA100	LQFP144	WLCSP180		UFBGA176(8) LQFP176	LQFP208	TFBGA216

1. For the LQFP100 package, only FMC Bank1 is available. Bank1 can only support a multiplexed NOR/PSRAM memory using the NE1 Chip Select.
2. The SPI1, SPI2 and SPI3 interfaces give the flexibility to work in an exclusive way in either the SPI mode or the I2S audio mode.
3. SDMMC2 supports a dedicated power rail for clock, command and data 0..4 lines, feature available starting from 144 pin package.
4. DSI host interface is only available on STM32F779x sales types.
5. 216 MHz maximum frequency for - 40°C to + 85°C ambient temperature range (200 MHz maximum frequency for - 40°C to + 105°C ambient temperature range).
6. V_{DD}/V_{DDA} minimum value of 1.7 V is obtained when the internal reset is OFF (refer to *Section 3.18.2: Internal reset OFF*).
7. The range -40° to +105°C is not available for WLCSP packages.
8. UFBGA176 is not available for STM32F779x sales types.

Full compatibility throughout the family

The STM32F777xx, STM32F778Ax and STM32F779xx devices are fully pin-to-pin, compatible with the STM32F4xxxx devices, allowing the user to try different peripherals, and reaching higher frequency for a greater degree of freedom during the development cycle.

Figure 1 gives compatible board designs between the STM32F7xx and STM32F4xx families.

Figure 1. Compatible board design for LQFP100 package

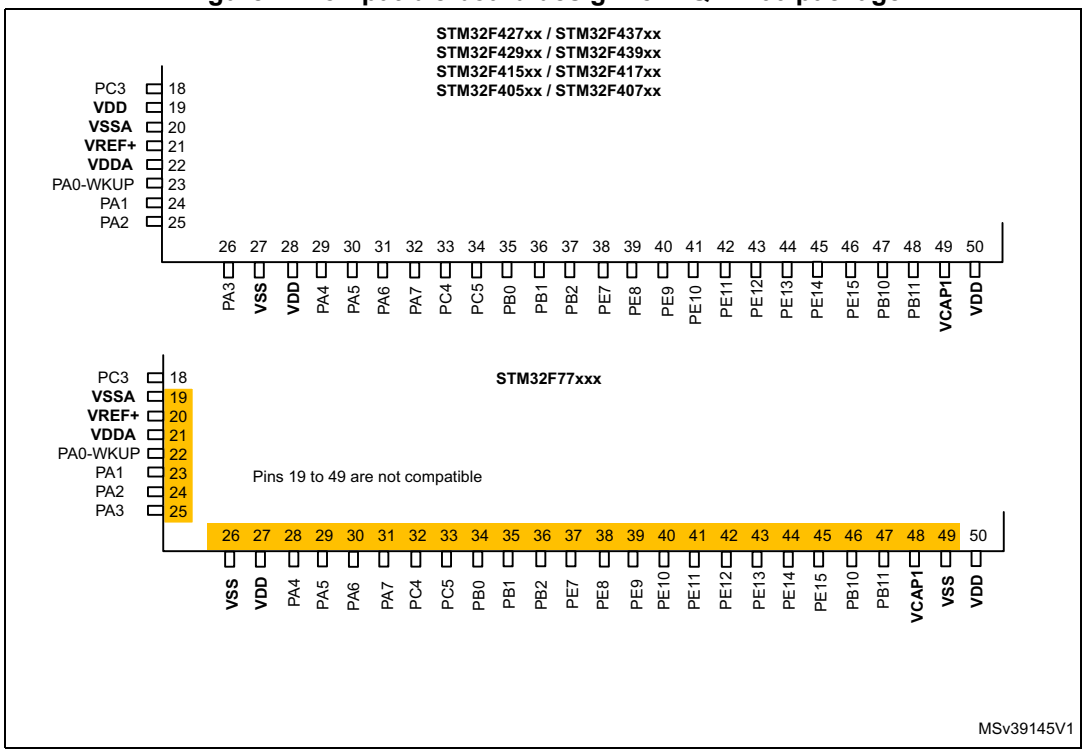

The STM32F77x LQFP144, LQFP176, LQFP208, TFBGA216, UFBGA176 packages are fully pin to pin compatible with STM32F4xx devices.

Figure 2. STM32F777xx, STM32F778Ax and STM32F779xx block diagram

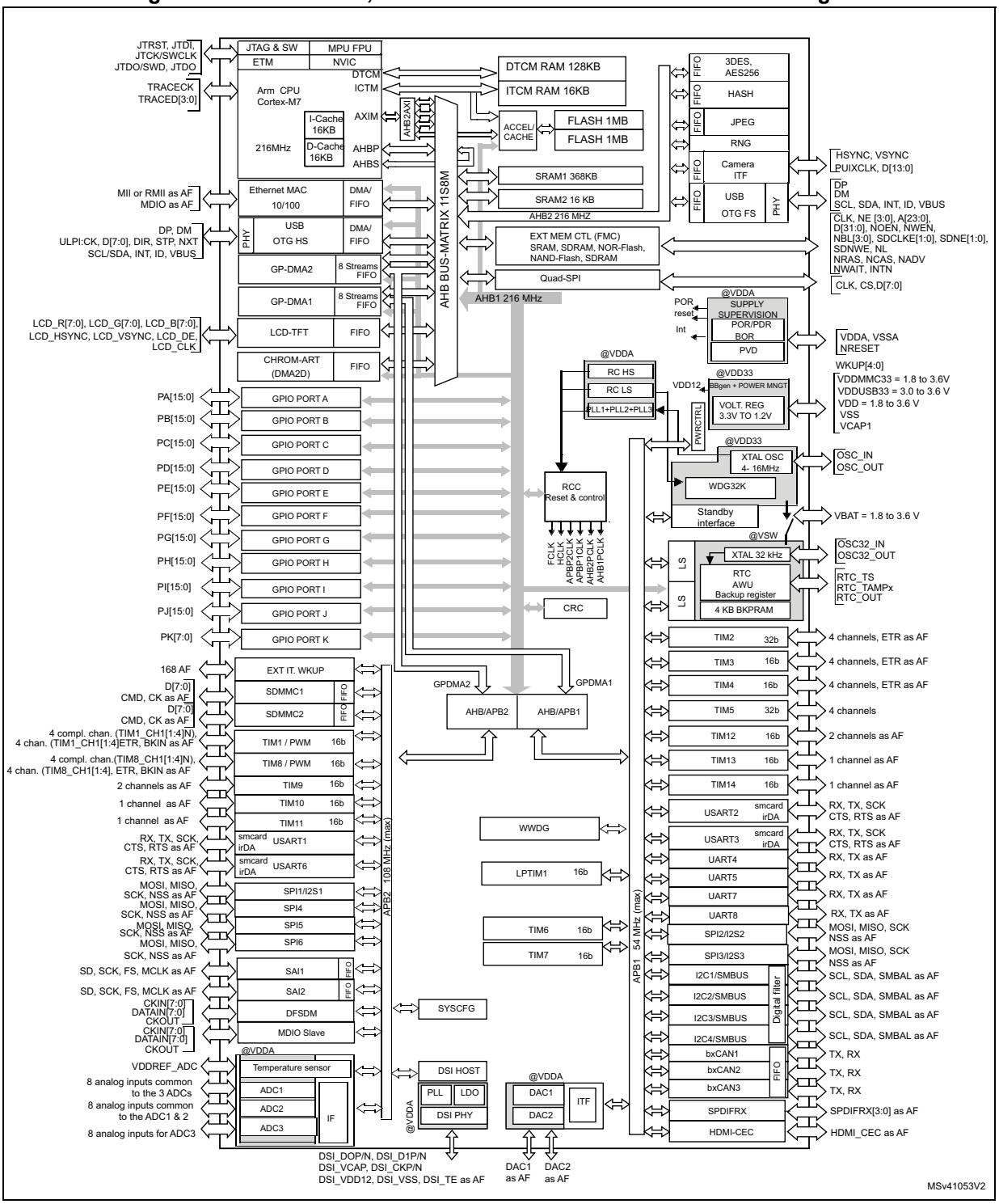

1. The timers connected to APB2 are clocked from TIMxCLK up to 216 MHz, while the timers connected to APB1 are clocked from TIMxCLK either up to 108 MHz or 216 MHz depending on TIMPRE bit configuration in the RCC_DCKCFGR register.

3 Functional overview

3.1 Arm® Cortex®-M7 with FPU

The Arm® Cortex®-M7 with FPU processor is the latest generation of Arm processors for embedded systems. It was developed to provide a low-cost platform that meets the needs of MCU implementation, with a reduced pin count and low-power consumption, while delivering an outstanding computational performance and low interrupt latency.

The Cortex®-M7 processor is a highly efficient high-performance featuring:

- Six-stage dual-issue pipeline
- Dynamic branch prediction
- Harvard caches (16 Kbytes of I-cache and 16 Kbytes of D-cache)
- 64-bit AXI4 interface
- 64-bit ITCM interface
- 2x32-bit DTCM interfaces

The processor supports the following memory interfaces:

- Tightly Coupled Memory (TCM) interface.
- Harvard instruction and data caches and AXI master (AXIM) interface.
- Dedicated low-latency AHB-Lite peripheral (AHBP) interface.

The processor supports a set of DSP instructions which allow an efficient signal processing and a complex algorithm execution.

It supports single and double precision FPU (floating point unit), speeds up software development by using metalanguage development tools, while avoiding saturation.

Figure 2 shows the general block diagram of the STM32F77xxx family.

Note: The Cortex®-M7 with FPU core is binary compatible with the Cortex®-M4 core.

3.2 Memory protection unit

The memory protection unit (MPU) is used to manage the CPU accesses to memory to prevent one task to accidentally corrupt the memory or resources used by any other active task. This memory area is organized into up to 8 protected areas that can in turn be divided up into 8 subareas. The protection area sizes are between 32 bytes and the whole 4 gigabytes of addressable memory.

The MPU is especially helpful for applications where some critical or certified code has to be protected against the misbehavior of other tasks. It is usually managed by an RTOS (real-time operating system). If a program accesses a memory location that is prohibited by the MPU, the RTOS can detect it and take action. In an RTOS environment, the kernel can dynamically update the MPU area setting, based on the process to be executed.

The MPU is optional and can be bypassed for applications that do not need it.

3.3 Embedded flash memory

The STM32F777xx, STM32F778Ax and STM32F779xx devices embed a flash memory of up to 2 Mbytes available for storing programs and data. The flash interface features:

- Single /or Dual bank operating modes,
- Read-While-Write (RWW) in Dual bank mode.

3.4 CRC (cyclic redundancy check) calculation unit

The CRC (cyclic redundancy check) calculation unit is used to get a CRC code using a configurable generator polynomial value and size.

Among other applications, CRC-based techniques are used to verify data transmission or storage integrity. In the scope of the EN/IEC 60335-1 standard, they offer a means of verifying the flash memory integrity. The CRC calculation unit helps compute a signature of the software during runtime, to be compared with a reference signature generated at link-time and stored at a given memory location.

3.5 Embedded SRAM

All the devices feature:

- System SRAM up to 512 Kbytes:
  - SRAM1 on AHB bus Matrix: 368 Kbytes
  - SRAM2 on AHB bus Matrix: 16 Kbytes
  - DTCM-RAM on TCM interface (Tighly Coupled Memory interface): 128 Kbytes for critical real-time data.
- Instruction RAM (ITCM-RAM) 16 Kbytes:
  - It is mapped on TCM interface and reserved only for CPU Execution/Instruction useful for critical real-time routines.

The Data TCM RAM is accessible by the GP-DMAs and peripherals DMAs through specific AHB slave of the CPU.The instruction TCM RAM is reserved only for CPU. It is accessed at CPU clock speed with 0 wait states.

- 4 Kbytes of backup SRAM

  This area is accessible only from the CPU. Its content is protected against possible unwanted write accesses, and is retained in Standby or V_{BAT} mode.

3.6 AXI-AHB bus matrix

The STM32F777xx, STM32F778Ax and STM32F779xx system architecture is based on 2 sub-systems:

- An AXI to multi AHB bridge converting AXI4 protocol to AHB-Lite protocol:
  - 3x AXI to 32-bit AHB bridges connected to AHB bus matrix
  - 1x AXI to 64-bit AHB bridge connected to the embedded flash memory
- A multi-AHB Bus-Matrix
  - The 32-bit multi-AHB bus matrix interconnects all the masters (CPU, DMAs, Ethernet, USB HS, LCD-TFT, and DMA2D) and the slaves (flash memory, RAM,

FMC, Quad-SPI, AHB and APB peripherals) and ensures a seamless and efficient operation even when several high-speed peripherals work simultaneously.

Figure 3. STM32F777xx, STM32F778Ax and STM32F779xx AXI-AHB bus matrix architecture(1)

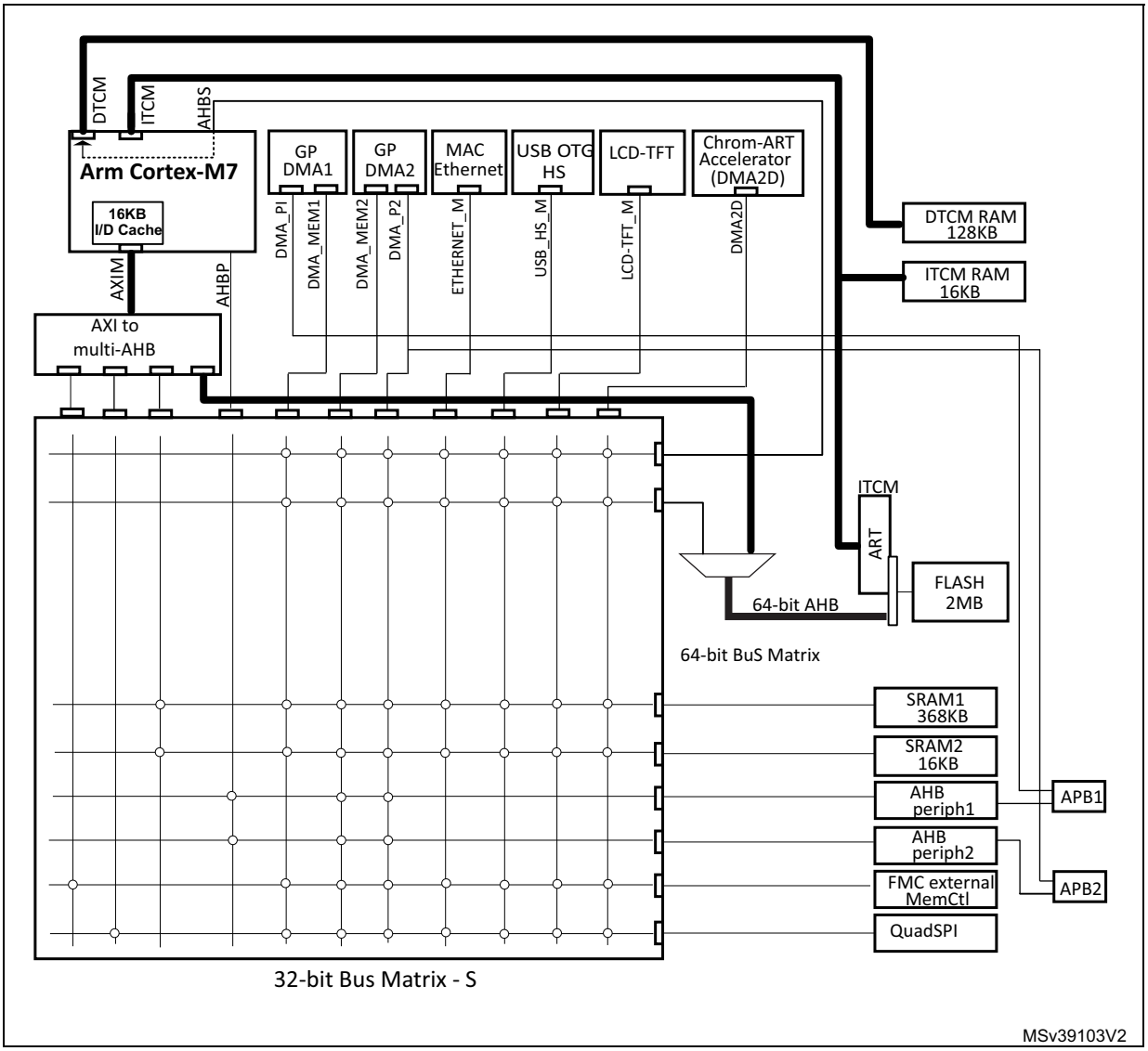

1. The above figure has large wires for 64-bits bus and thin wires for 32-bits bus.

3.7 DMA controller (DMA)

The devices feature two general-purpose dual-port DMAs (DMA1 and DMA2) with 8 streams each. They are able to manage memory-to-memory, peripheral-to-memory and memory-to-peripheral transfers. They feature dedicated FIFOs for APB/AHB peripherals, support burst transfer and are designed to provide the maximum peripheral bandwidth (AHB/APB).

The two DMA controllers support circular buffer management, so that no specific code is needed when the controller reaches the end of the buffer. The two DMA controllers also have a double buffering feature, which automates the use and switching of two memory buffers without requiring any special code.

Each stream is connected to dedicated hardware DMA requests, with support for software trigger on each stream. The configuration is made by software and the transfer sizes between the source and the destination are independent.

The DMA can be used with the main peripherals:

- SPI and I^2S
- I^2C
- USART
- General-purpose, basic and advanced-control timers TIMx
- DAC
- SDMMC
- Cryptographic acceleration
- Camera interface (DCMI)
- ADC
- SAI
- SPDIFRX
- Quad-SPI
- HDMI-CEC
- JPEG codec
- DFSDM1

3.8 Flexible memory controller (FMC)

The Flexible memory controller (FMC) includes three memory controllers:

- The NOR/PSRAM memory controller
- The NAND/memory controller
- The Synchronous DRAM (SDRAM/Mobile LPSDR SDRAM) controller

The main features of the FMC controller are the following:

- Interface with static-memory mapped devices including:
  - Static random access memory (SRAM)
  - NOR flash memory/OneNAND flash memory
  - PSRAM (4 memory banks)
  - NAND flash memory with ECC hardware to check up to 8 Kbytes of data
- Interface with synchronous DRAM (SDRAM/Mobile LPSDR SDRAM) memories
- 8-,16-,32-bit data bus width
- Independent Chip Select control for each memory bank
- Independent configuration for each memory bank
- Write FIFO
- Read FIFO for SDRAM controller
- The maximum FMC_CLK/FMC_SDCLK frequency for synchronous accesses is HCLK/2

LCD parallel interface

The FMC can be configured to interface seamlessly with most graphic LCD controllers. It supports the Intel 8080 and Motorola 6800 modes, and is flexible enough to adapt to specific LCD interfaces. This LCD parallel interface capability makes it easy to build cost-effective graphic applications using LCD modules with embedded controllers or high performance solutions using external controllers with dedicated acceleration.

3.9 Quad-SPI memory interface (QUADSPI)

All the devices embed a Quad-SPI memory interface, which is a specialized communication interface targetting Single, Dual or Quad-SPI flash memories. It can work in:

- Direct mode through registers
- External flash status register polling mode
- Memory mapped mode.

Up to 256 Mbytes external flash are memory mapped, supporting 8, 16 and 32-bit access. Code execution is supported.

The opcode and the frame format are fully programmable. The communication can be either in Single Data Rate or Dual Data Rate.

3.10 LCD-TFT controller

The LCD-TFT display controller provides a 24-bit parallel digital RGB (Red, Green, Blue) and delivers all signals to interface directly to a broad range of LCD and TFT panels up to XGA (1024x768) resolution with the following features:

- 2 display layers with dedicated FIFO (64x32-bit)
- Color Look-Up table (CLUT) up to 256 colors (256x24-bit) per layer
- Up to 8 input color formats selectable per layer
- Flexible blending between two layers using alpha value (per pixel or constant)
- Flexible programmable parameters for each layer
- Color keying (transparency color)
- Up to 4 programmable interrupt events

3.11 Chrom-ART Accelerator (DMA2D)

The Chrom-Art Accelerator (DMA2D) is a graphic accelerator which offers advanced bit blitting, row data copy and pixel format conversion. It supports the following functions:

- Rectangle filling with a fixed color
- Rectangle copy
- Rectangle copy with pixel format conversion
- Rectangle composition with blending and pixel format conversion

Various image format codings are supported, from indirect 4bpp color mode up to 32bpp direct color. It embeds dedicated memory to store color lookup tables.

An interrupt can be generated when an operation is complete or at a programmed watermark.

All the operations are fully automatized and are running independently from the CPU or the DMAs.

3.12 Nested vectored interrupt controller (NVIC)

The devices embed a nested vectored interrupt controller able to manage 16 priority levels, and handle up to 110 maskable interrupt channels plus the 16 interrupt lines of the Cortex®-M7 with FPU core.

- Closely coupled NVIC gives low-latency interrupt processing
- Interrupt entry vector table address passed directly to the core
- Allows early processing of interrupts
- Processing of late arriving, higher-priority interrupts
- Support tail chaining
- Processor state automatically saved
- Interrupt entry restored on interrupt exit with no instruction overhead

This hardware block provides flexible interrupt management features with minimum interrupt latency.

3.13 JPEG codec (JPEG)

The JPEG codec provides an fast and simple hardware compressor and decompressor of JPEG images with full management of JPEG headers.

The JPEG codec main features:

- 8-bit/channel pixel depths
- Single clock per pixel encoding and decoding
- Support for JPEG header generation and parsing
- Up to four programmable quantization tables
- Fully programmable Huffman tables (two AC and two DC)
- Fully programmable minimum coded unit (MCU)
- Encode/decode support (non simultaneous)
- Single clock Huffman coding and decoding
- Two-channel interface: Pixel/Compress In, Pixel/Compressed Out
- Stallable design
- Support for single, greyscale component
- Functionality to enable/disable header processing
- Internal register interface
- Fully synchronous design
- Configured for high-speed decode mode

3.14 External interrupt/event controller (EXTI)

The external interrupt/event controller consists of 25 edge-detector lines used to generate interrupt/event requests. Each line can be independently configured to select the trigger event (rising edge, falling edge, both) and can be masked independently. A pending register maintains the status of the interrupt requests. The EXTI can detect an external line with a pulse width shorter than the Internal APB2 clock period. Up to 168 GPIOs can be connected to the 16 external interrupt lines.

3.15 Clocks and startup

On reset the 16 MHz internal HSI RC oscillator is selected as the default CPU clock. The 16 MHz internal RC oscillator is factory-trimmed to offer 1% accuracy. The application can then select as system clock either the RC oscillator or an external 4-26 MHz clock source. This clock can be monitored for failure. If a failure is detected, the system automatically switches back to the internal RC oscillator and a software interrupt is generated (if enabled). This clock source is input to a PLL thus allowing to increase the frequency up to 216 MHz. Similarly, full interrupt management of the PLL clock entry is available when necessary (for example if an indirectly used external oscillator fails).

Several prescalers allow the configuration of the two AHB buses, the high-speed APB (APB2) and the low-speed APB (APB1) domains. The maximum frequency of the two AHB buses is 216 MHz while the maximum frequency of the high-speed APB domains is 108 MHz. The maximum allowed frequency of the low-speed APB domain is 54 MHz.

The devices embed two dedicated PLL (PLLI2S and PLLSAI) which allow to achieve audio class performance. In this case, the I^2S and SAI master clock can generate all standard sampling frequencies from 8 kHz to 192 kHz.

3.16 Boot modes

At startup, the boot memory space is selected by the BOOT pin and BOOT_ADDx option bytes, allowing to program any boot memory address from 0x0000 0000 to 0x3FFF FFFF which includes:

- All flash address space mapped on ITCM or AXIM interface
- All RAM address space: ITCM, DTCM RAMs and SRAMs mapped on AXIM interface
- The System memory bootloader

The boot loader is located in system memory. It is used to reprogram the flash memory through a serial interface. Refer to *STM32 microcontroller system memory boot mode* application note (AN2606) for details.

3.17 Power supply schemes

- V_{DD} = 1.7 to 3.6 V: external power supply for I/Os and the internal regulator (when enabled), provided externally through V_{DD} pins.
- V_{SSA}, V_{DDA} = 1.7 to 3.6 V: external analog power supplies for ADC, DAC, Reset blocks, RCs and PLL. V_{DDA} and V_{SSA} must be connected to V_{DD} and V_{SS}, respectively.
- V_{BAT} = 1.65 to 3.6 V: power supply for RTC, external clock 32 kHz oscillator and backup registers (through power switch) when V_{DD} is not present.

Note: V_{DD}/V_{DDA} minimum value of 1.7 V is obtained when the internal reset is OFF (refer to Section 3.18.2: Internal reset OFF). Refer to Table 3: Voltage regulator configuration mode versus device operating mode to identify the packages supporting this option.

- $V_{DDSDMMC}$ can be connected either to V_{DD} or an external independent power supply (1.8 to 3.6V) for SDMMC2 pins (clock, command, and 4-bit data). For example, when the device is powered at 1.8V, an independent power supply 2.7V can be connected to $V_{DDSDMMC}$.When the $V_{DDSDMMC}$ is connected to a separated power supply, it is independent from V_{DD} or V_{DDA} but it must be the last supply to be provided and the first to disappear. The following conditions $V_{DDSDMMC}$ must be respected:
  - During the power-on phase ($V_{DD} < V_{DD_MIN}$), $V_{DDSDMMC}$ should be always lower than V_{DD}
  - During the power-down phase ($V_{DD} < V_{DD_MIN}$), $V_{DDSDMMC}$ should be always lower than V_{DD}
  - The $V_{DDSDMMC}$ rising and falling time rate specifications must be respected
  - In operating mode phase, $V_{DDSDMMC}$ could be lower or higher than V_{DD}: All associated GPIOs powered by $V_{DDSDMMC}$ are operating between $V_{DDSDMMC_MIN}$ and $V_{DDSDMMC_MAX}$.
- V_{DDUSB} can be connected either to V_{DD} or an external independent power supply (3.0 to 3.6V) for USB transceivers (refer to *Figure 4* and *Figure 5*). For example, when the device is powered at 1.8V, an independent power supply 3.3V can be connected to V_{DDUSB}. When the V_{DDUSB} is connected to a separated power supply, it is independent from V_{DD} or V_{DDA} but it must be the last supply to be provided and the first to

disappear. The following conditions V_{DDUSB} must be respected:

– During the power-on phase ($V_{DD} < V_{DD_MIN}$), V_{DDUSB} should be always lower than V_{DD}
– During the power-down phase ($V_{DD} < V_{DD_MIN}$), V_{DDUSB} should be always lower than V_{DD}
– The V_{DDUSB} rising and falling time rate specifications must be respected
– In operating mode phase, V_{DDUSB} could be lower or higher than V_{DD}:
  - If USB (USB OTG_HS/OTG_FS) is used, the associated GPIOs powered by V_{DDUSB} are operating between V_{DDUSB_MIN} and V_{DDUSB_MAX}.
  - The V_{DDUSB} supply both USB transceiver (USB OTG_HS and USB OTG_FS). If only one USB transceiver is used in the application, the GPIOs associated to the other USB transceiver are still supplied by V_{DDUSB}.
  - If USB (USB OTG_HS/OTG_FS) is not used, the associated GPIOs powered by V_{DDUSB} are operating between V_{DD_MIN} and V_{DD_MAX}.

Figure 4. V_{DDUSB} connected to V_{DD} power supply

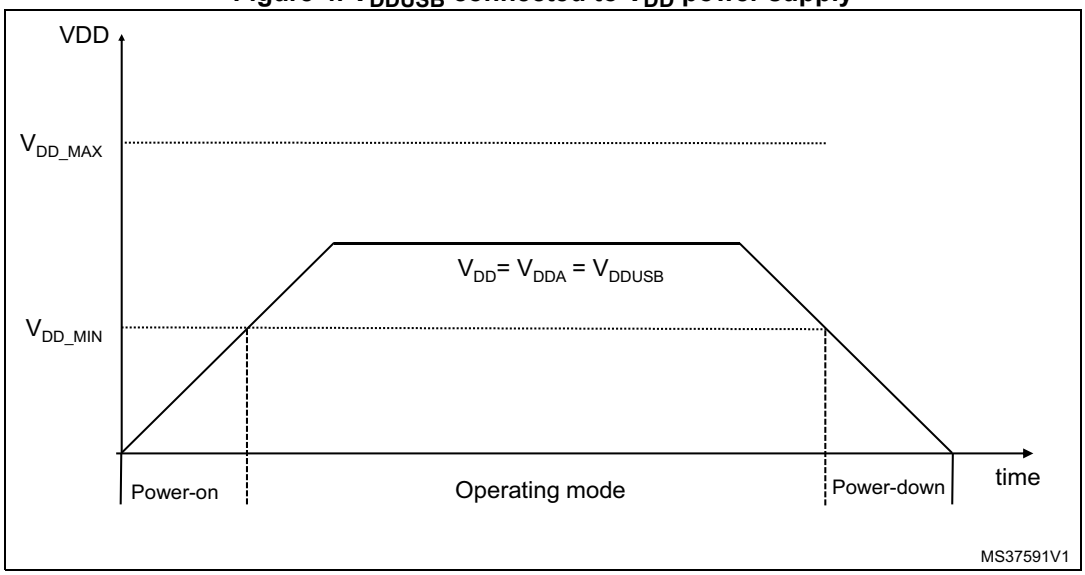

Figure 5. V_{DDUSB} connected to external power supply

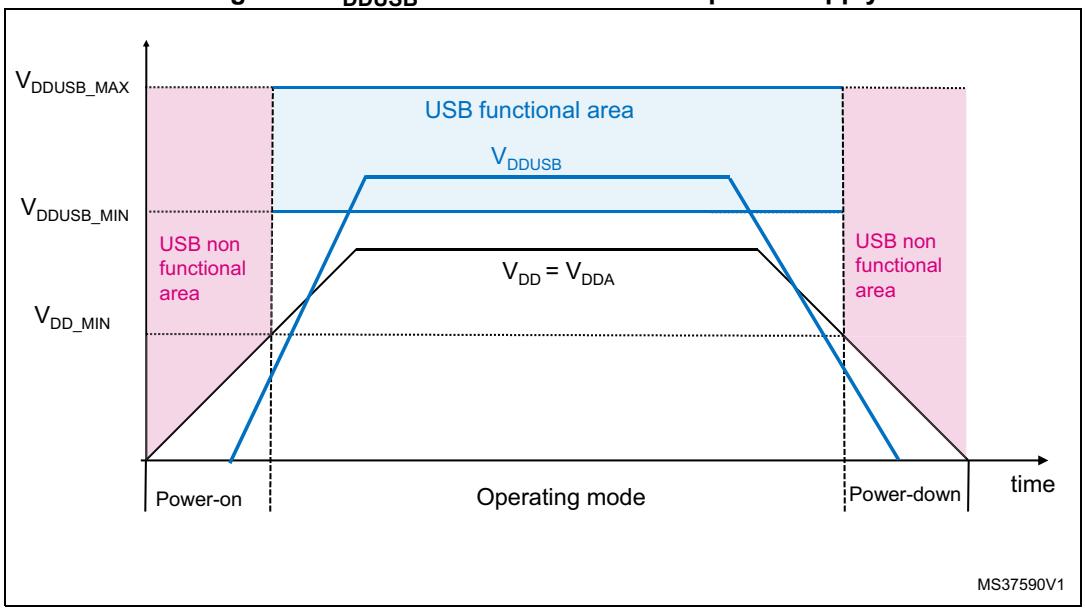

The DSI (Display Serial Interface) sub-system uses several power supply pins which are independent from the other supply pins:

- V_{DDDSI} is an independent DSI power supply dedicated for DSI Regulator and MIPI D-PHY. This supply must be connected to global V_{DD}.
- The V_{CAPDSI} pin is the output of DSI Regulator (1.2V) which must be connected externally to $V_{DD12DSI}$.
- The $V_{DD12DSI}$ pin is used to supply the MIPI D-PHY, and to supply the clock and data lanes pins. An external capacitor of 2.2 uF must be connected on the $V_{DD12DSI}$ pin.
- The V_{SSDSI} pin is an isolated supply ground used for DSI sub-system.
- If the DSI functionality is not used at all, then:
  - The V_{DDDSI} pin must be connected to global V_{DD}.
  - The V_{CAPDSI} pin must be connected externally to $V_{DD12DSI}$ but the external capacitor is no more needed.
  - The V_{SSDSI} pin must be grounded.

3.18 Power supply supervisor

3.18.1 Internal reset ON

On packages embedding the PDR_ON pin, the power supply supervisor is enabled by holding PDR_ON high. On the other packages, the power supply supervisor is always enabled.

The device has an integrated power-on reset (POR)/ power-down reset (PDR) circuitry coupled with a Brownout reset (BOR) circuitry. At power-on, POR/PDR is always active and ensures proper operation starting from 1.8 V. After the 1.8 V POR threshold level is reached, the option byte loading process starts, either to confirm or modify default BOR thresholds, or to disable BOR permanently. Three BOR thresholds are available through

option bytes. The device remains in reset mode when V_{DD} is below a specified threshold, $V_{POR/PDR}$ or V_{BOR}, without the need for an external reset circuit.

The device also features an embedded programmable voltage detector (PVD) that monitors the V_{DD}/V_{DDA} power supply and compares it to the V_{PVD} threshold. An interrupt can be generated when V_{DD}/V_{DDA} drops below the V_{PVD} threshold and/or when V_{DD}/V_{DDA} is higher than the V_{PVD} threshold. The interrupt service routine can then generate a warning message and/or put the MCU into a safe state. The PVD is enabled by software.

3.18.2 Internal reset OFF

This feature is available only on packages featuring the PDR_ON pin. The internal power-on reset (POR) / power-down reset (PDR) circuitry is disabled through the PDR_ON pin.

An external power supply supervisor should monitor V_{DD} and NRST and should maintain the device in reset mode as long as V_{DD} is below a specified threshold. PDR_ON should be connected to V_{SS}. Refer to *Figure 6: Power supply supervisor interconnection with internal reset OFF*.

Figure 6. Power supply supervisor interconnection with internal reset OFF

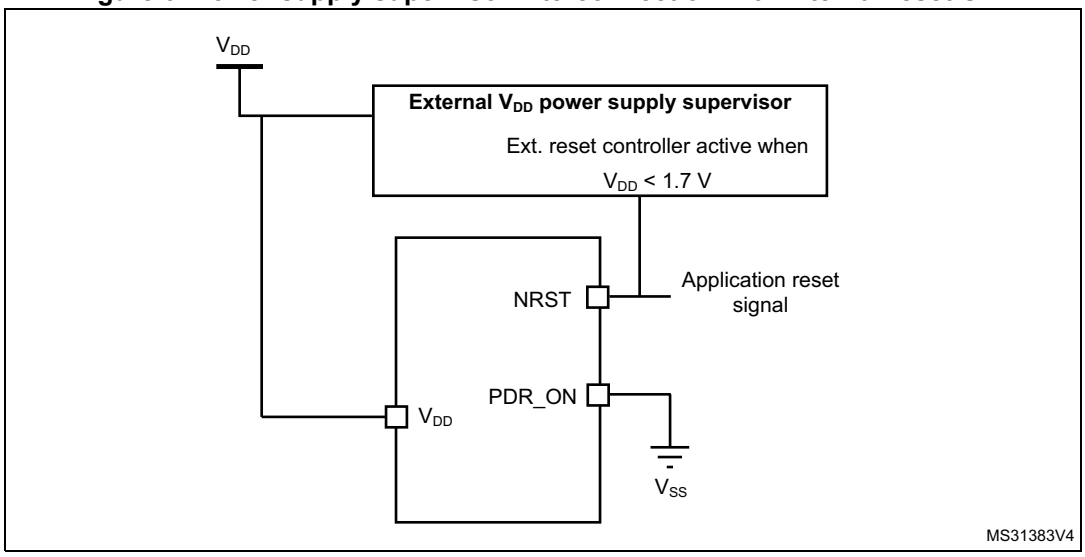

The V_{DD} specified threshold, below which the device must be maintained under reset, is 1.7 V (see *Figure 7*).

A comprehensive set of power-saving mode allows to design low-power applications.

When the internal reset is OFF, the following integrated features are no more supported:

- The integrated power-on reset (POR) / power-down reset (PDR) circuitry is disabled
- The brownout reset (BOR) circuitry must be disabled
- The embedded programmable voltage detector (PVD) is disabled
- V_{BAT} functionality is no more available and V_{BAT} pin should be connected to V_{DD}.

All the packages, except for the LQFP100, allow to disable the internal reset through the PDR_ON signal when connected to V_{SS}.

Figure 7. PDR_ON control with internal reset OFF

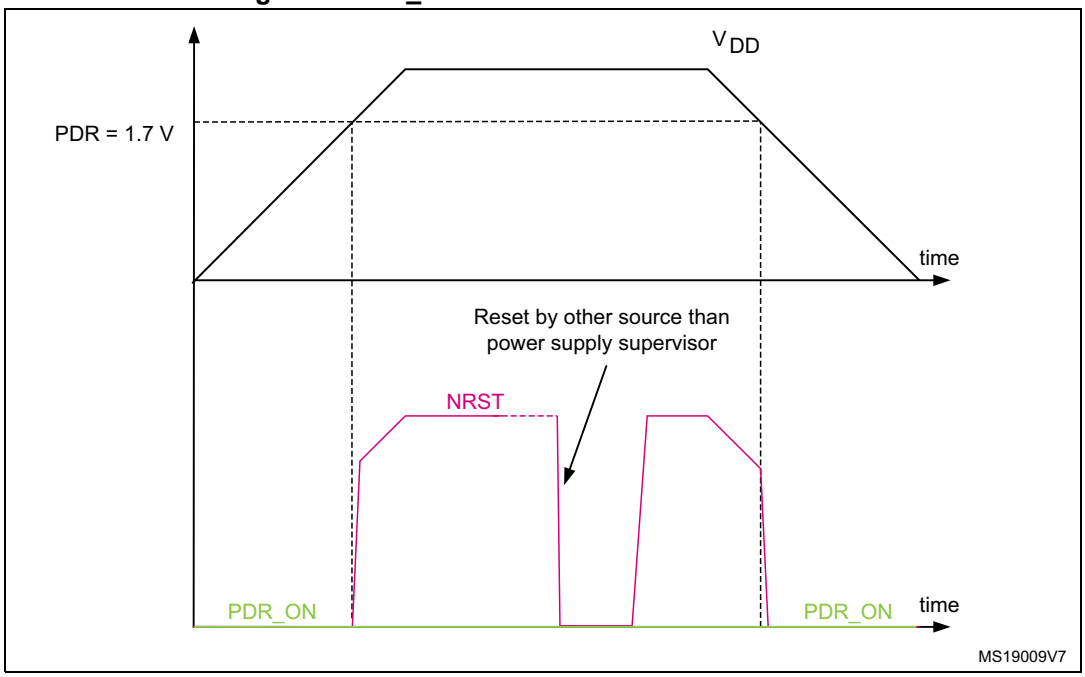

3.19 Voltage regulator

The regulator has four operating modes:

- Regulator ON
  - Main regulator mode (MR)
  - Low power regulator (LPR)
  - Power-down
- Regulator OFF

3.19.1 Regulator ON

On packages embedding the BYPASS_REG pin, the regulator is enabled by holding BYPASS_REG low. On all other packages, the regulator is always enabled.

There are three power modes configured by software when the regulator is ON:

- MR mode used in Run/sleep modes or in Stop modes
  - In Run/Sleep modes

    The MR mode is used either in the normal mode (default mode) or the over-drive mode (enabled by software). Different voltages scaling are provided to reach the best compromise between maximum frequency and dynamic power consumption. The over-drive mode allows operating at a higher frequency than the normal mode for a given voltage scaling.
  - In Stop modes

    The MR can be configured in two ways during stop mode:

    MR operates in normal mode (default mode of MR in stop mode)

    MR operates in under-drive mode (reduced leakage mode).

- LPR is used in the Stop modes:
  The LP regulator mode is configured by software when entering Stop mode.
  Like the MR mode, the LPR can be configured in two ways during stop mode:
  – LPR operates in normal mode (default mode when LPR is ON)
  – LPR operates in under-drive mode (reduced leakage mode).
- Power-down is used in Standby mode.
  The Power-down mode is activated only when entering in Standby mode. The regulator output is in high impedance and the kernel circuitry is powered down, inducing zero consumption. The contents of the registers and SRAM are lost.

Refer to *Table 3* for a summary of voltage regulator modes versus device operating modes.

Two external ceramic capacitors should be connected on V_{CAP_1} and V_{CAP_2} pin.

All packages have the regulator ON feature.

Table 3. Voltage regulator configuration mode versus device operating mode(1)

Voltage regulator configuration	Run mode	Sleep mode	Stop mode	Standby mode
Normal mode	MR	MR	MR or LPR	-
Over-drive mode(2)	MR	MR	-	-
Under-drive mode	-	-	MR or LPR	-
Power-down mode	-	-	-	Yes

1. '-' means that the corresponding configuration is not available.
2. The over-drive mode is not available when V_{DD} = 1.7 to 2.1 V.

3.19.2 Regulator OFF

This feature is available only on packages featuring the BYPASS_REG pin. The regulator is disabled by holding BYPASS_REG high. The regulator OFF mode allows to supply externally a V_{12} voltage source through V_{CAP_1} and V_{CAP_2} pins.

Since the internal voltage scaling is not managed internally, the external voltage value must be aligned with the targeted maximum frequency.The two 2.2 µF ceramic capacitors should be replaced by two 100 nF decoupling capacitors.

When the regulator is OFF, there is no more internal monitoring on V_{12}. An external power supply supervisor should be used to monitor the V_{12} of the logic power domain. PA0 pin should be used for this purpose, and act as power-on reset on V_{12} power domain.

In the regulator OFF mode, the following features are no more supported:

- PA0 cannot be used as a GPIO pin since it allows to reset a part of the V_{12} logic power domain which is not reset by the NRST pin.
- As long as PA0 is kept low, the debug mode cannot be used under power-on reset. As a consequence, PA0 and NRST pins must be managed separately if the debug connection under reset or pre-reset is required.
- The over-drive and under-drive modes are not available.
- The Standby mode is not available.

Figure 8. Regulator OFF

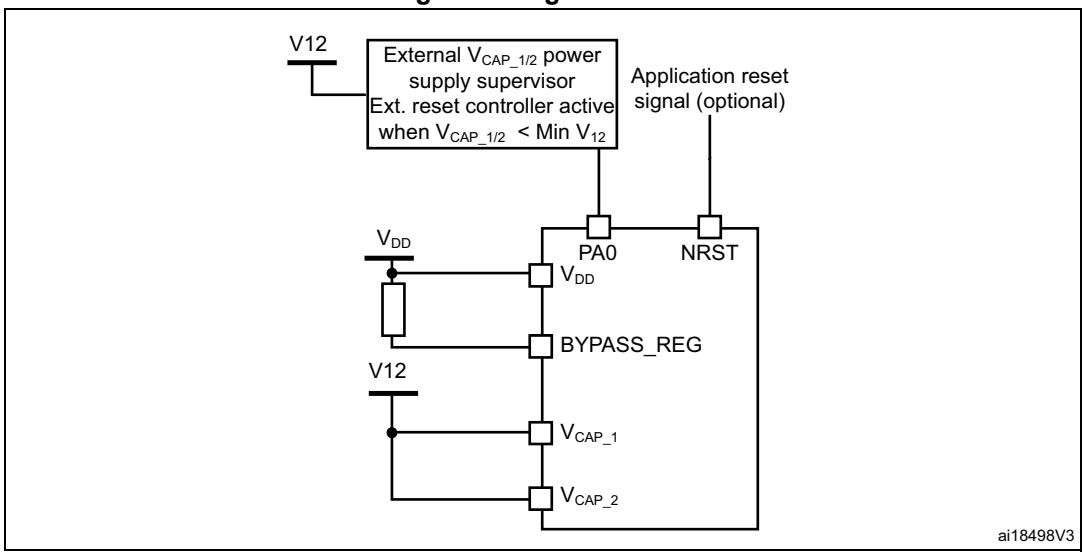

The following conditions must be respected:

- V_{DD} should always be higher than V_{CAP_1} and V_{CAP_2} to avoid current injection between power domains.
- If the time for V_{CAP_1} and V_{CAP_2} to reach V_{12} minimum value is faster than the time for V_{DD} to reach 1.7 V, then PA0 should be kept low to cover both conditions: until V_{CAP_1} and V_{CAP_2} reach V_{12} minimum value and until V_{DD} reaches 1.7 V (see *Figure 9*).
- Otherwise, if the time for V_{CAP_1} and V_{CAP_2} to reach V_{12} minimum value is slower than the time for V_{DD} to reach 1.7 V, then PA0 could be asserted low externally (see *Figure 10*).
- If V_{CAP_1} and V_{CAP_2} go below V_{12} minimum value and V_{DD} is higher than 1.7 V, then a reset must be asserted on PA0 pin.

Note: The minimum value of V_{12} depends on the maximum frequency targeted in the application.

Figure 9. Startup in regulator OFF: slow V_{DD} slope - power-down reset risen after V_{CAP_1},V_{CAP_2} stabilization

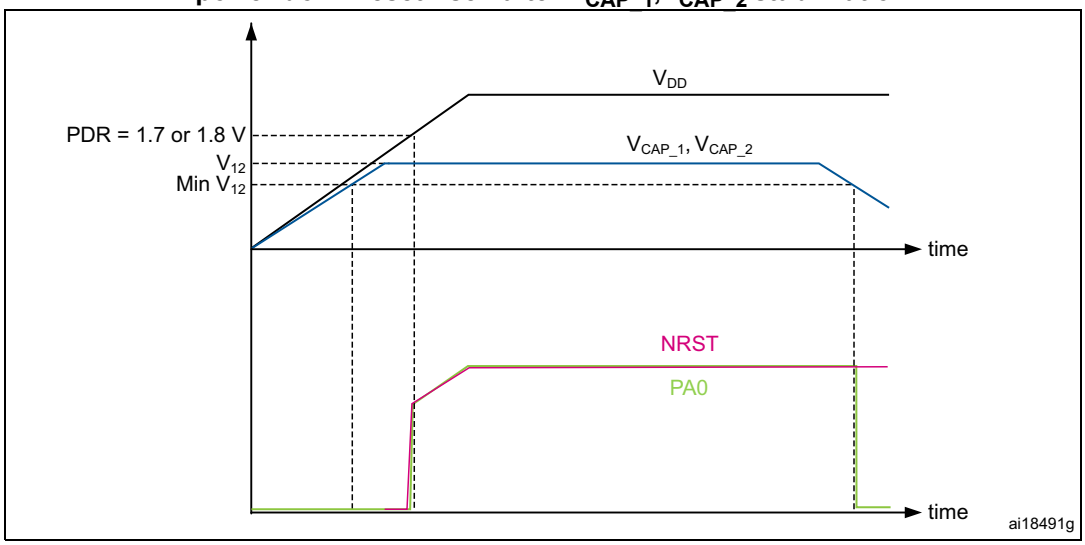

1. This figure is valid whatever the internal reset mode (ON or OFF).

Figure 10. Startup in regulator OFF mode: fast V_{DD} slope - power-down reset risen before V_{CAP_1},V_{CAP_2} stabilization

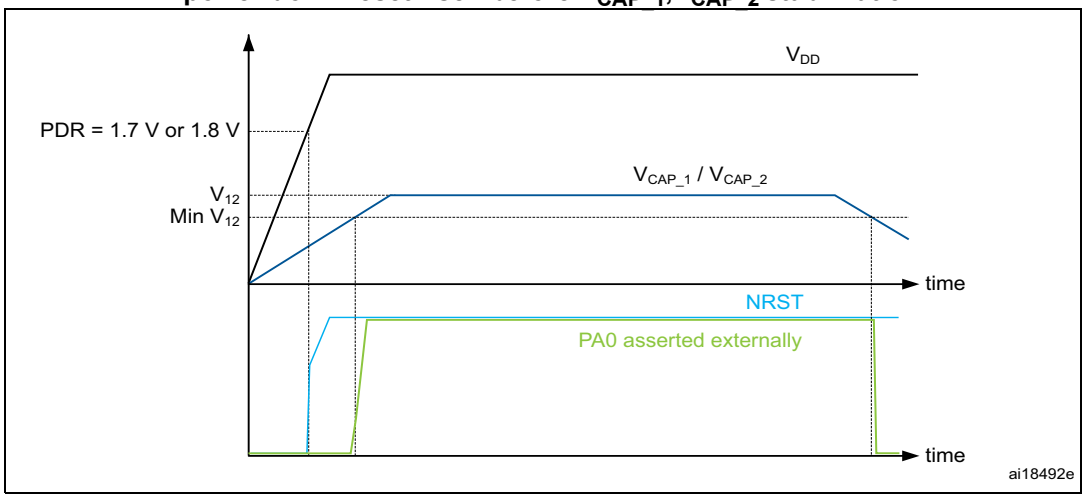

1. This figure is valid whatever the internal reset mode (ON or OFF).

3.19.3 Regulator ON/OFF and internal reset ON/OFF availability

Table 4. Regulator ON/OFF and internal reset ON/OFF availability

Package	Regulator ON	Regulator OFF	Internal reset ON	Internal reset OFF
LQFP100	Yes	No	Yes	No
LQFP144, LQFP208			Yes PDR_ON set to V_{DD}	Yes PDR_ON set to V_{SS}
LQFP176, UFBGA176, TFBGA100, TFBGA216	Yes BYPASS_REG set to V_{SS}	Yes BYPASS_REG set to V_{DD}		
WLCSP180	Yes(1)			

1. Available only on dedicated part number. Refer to *Section 8: Ordering information*.

3.20 Real-time clock (RTC), backup SRAM and backup registers

The RTC is an independent BCD timer/counter. It supports the following features:

- Calendar with subsecond, seconds, minutes, hours (12 or 24 format), week day, date, month, year, in BCD (binary-coded decimal) format.
- Automatic correction for 28, 29 (leap year), 30, and 31 days of the month.
- Two programmable alarms.
- On-the-fly correction from 1 to 32767 RTC clock pulses. This can be used to synchronize it with a master clock.
- Reference clock detection: a more precise second source clock (50 or 60 Hz) can be used to enhance the calendar precision.
- Digital calibration circuit with 0.95 ppm resolution, to compensate for quartz crystal inaccuracy.
- Three anti-tamper detection pins with programmable filter.
- Timestamp feature which can be used to save the calendar content. This function can be triggered by an event on the timestamp pin, or by a tamper event, or by a switch to V_{BAT} mode.
- 17-bit auto-reload wakeup timer (WUT) for periodic events with programmable resolution and period.

The RTC and the 32 backup registers are supplied through a switch that takes power either from the V_{DD} supply when present or from the V_{BAT} pin.

The backup registers are 32-bit registers used to store 128 bytes of user application data when VDD power is not present. They are not reset by a system or power reset, or when the device wakes up from Standby mode.

The RTC clock sources can be:

- A 32.768 kHz external crystal (LSE)
- An external resonator or oscillator(LSE)
- The internal low power RC oscillator (LSI, with typical frequency of 32 kHz)
- The high-speed external clock (HSE) divided by 32

The RTC is functional in V_{BAT} mode and in all low-power modes when it is clocked by the LSE. When clocked by the LSI, the RTC is not functional in V_{BAT} mode, but is functional in all low-power modes.

All RTC events (Alarm, WakeUp Timer, Timestamp or Tamper) can generate an interrupt and wakeup the device from the low-power modes.

3.21 Low-power modes

The devices support three low-power modes to achieve the best compromise between low power consumption, short startup time and available wakeup sources:

- **Sleep mode**

  In Sleep mode, only the CPU is stopped. All peripherals continue to operate and can wake up the CPU when an interrupt/event occurs.

- **Stop mode**

  The Stop mode achieves the lowest power consumption while retaining the contents of SRAM and registers. All clocks in the 1.2 V domain are stopped, the PLL, the HSI RC and the HSE crystal oscillators are disabled.

  The voltage regulator can be put either in main regulator mode (MR) or in low-power mode (LPR). Both modes can be configured as follows (see *Table 5: Voltage regulator modes in stop mode*):

  – Normal mode (default mode when MR or LPR is enabled)

  – Under-drive mode.

  The device can be woken up from the Stop mode by any of the EXTI line (the EXTI line source can be one of the 16 external lines, the PVD output, the RTC alarm / wakeup / tamper / time stamp events, the USB OTG FS/HS wakeup or the Ethernet wakeup and LPTIM1 asynchronous interrupt).

Table 5. Voltage regulator modes in stop mode

Voltage regulator configuration	Main regulator (MR)	Low-power regulator (LPR)
Normal mode	MR ON	LPR ON
Under-drive mode	MR in under-drive mode	LPR in under-drive mode

- **Standby mode**

  The Standby mode is used to achieve the lowest power consumption. The internal voltage regulator is switched off so that the entire 1.2 V domain is powered off. The PLL, the HSI RC and the HSE crystal oscillators are also switched off. After entering

Standby mode, the SRAM and register contents are lost except for registers in the backup domain and the backup SRAM when selected.

The device exits the Standby mode when an external reset (NRST pin), an IWDG reset, a rising or falling edge on one of the 6 WKUP pins (PA0, PA2, PC1, PC13, PI8, PI11), or an RTC alarm / wakeup / tamper /time stamp event occurs.

The Standby mode is not supported when the embedded voltage regulator is bypassed and the 1.2 V domain is controlled by an external power.

3.22 V_{BAT} operation

The V_{BAT} pin allows to power the device V_{BAT} domain from an external battery, an external supercapacitor, or from V_{DD} when no external battery and an external supercapacitor are present.

V_{BAT} operation is activated when V_{DD} is not present.

The V_{BAT} pin supplies the RTC, the backup registers and the backup SRAM.

Note: When the microcontroller is supplied from V_{BAT}, external interrupts and RTC alarm/events do not exit it from V_{BAT} operation.

When the PDR_ON pin is connected to V_{SS} (Internal Reset OFF), the V_{BAT} functionality is no more available and the V_{BAT} pin should be connected to V_{DD}.

3.23 Timers and watchdogs

The devices include two advanced-control timers, eight general-purpose timers, two basic timers and two watchdog timers.

All timer counters can be frozen in debug mode.

Table 6 compares the features of the advanced-control, general-purpose and basic timers.

Table 6. Timer feature comparison

Timer type	Timer	Counter resolution	Counter type	Prescaler factor	DMA request generation	Capture/ compare channels	Complementary output	Max interface clock (MHz)	Max timer clock (MHz)(1)
Advanced-control	TIM1, TIM8	16-bit	Up, Down, Up/down	Any integer between 1 and 65536	Yes	4	Yes	108	216
General purpose	TIM2, TIM5	32-bit	Up, Down, Up/down	Any integer between 1 and 65536	Yes	4	No	54	108/216
	TIM3, TIM4	16-bit	Up, Down, Up/down	Any integer between 1 and 65536	Yes	4	No	54	108/216
	TIM9	16-bit	Up	Any integer between 1 and 65536	No	2	No	108	216
	TIM10, TIM11	16-bit	Up	Any integer between 1 and 65536	No	1	No	108	216
	TIM12	16-bit	Up	Any integer between 1 and 65536	No	2	No	54	108/216
	TIM13, TIM14	16-bit	Up	Any integer between 1 and 65536	No	1	No	54	108/216
Basic	TIM6, TIM7	16-bit	Up	Any integer between 1 and 65536	Yes	0	No	54	108/216

1. The maximum timer clock is either 108 or 216 MHz depending on TIMPRE bit configuration in the RCC_DCKCFGR register.

3.23.1 Advanced-control timers (TIM1, TIM8)

The advanced-control timers (TIM1, TIM8) can be seen as three-phase PWM generators multiplexed on 6 channels. They have complementary PWM outputs with programmable inserted dead times. They can also be considered as complete general-purpose timers. Their 4 independent channels can be used for:

- Input capture
- Output compare
- PWM generation (edge- or center-aligned modes)
- One-pulse mode output

If configured as standard 16-bit timers, they have the same features as the general-purpose TIMx timers. If configured as 16-bit PWM generators, they have full modulation capability (0-100%).

The advanced-control timer can work together with the TIMx timers via the Timer Link feature for synchronization or event chaining.

TIM1 and TIM8 support independent DMA request generation.

3.23.2 General-purpose timers (TIMx)

There are ten synchronizable general-purpose timers embedded in the STM32F77xxx devices (see *Table 6* for differences).

- **TIM2, TIM3, TIM4, TIM5**

  The STM32F77xxx include 4 full-featured general-purpose timers: TIM2, TIM5, TIM3, and TIM4.The TIM2 and TIM5 timers are based on a 32-bit auto-reload up/downcounter and a 16-bit prescaler. The TIM3 and TIM4 timers are based on a 16-bit auto-reload up/downcounter and a 16-bit prescaler. They all feature 4 independent channels for input capture/output compare, PWM or one-pulse mode output. This gives up to 16 input capture/output compare/PWMs on the largest packages.

  The TIM2, TIM3, TIM4, TIM5 general-purpose timers can work together, or with the other general-purpose timers and the advanced-control timers TIM1 and TIM8 via the Timer Link feature for synchronization or event chaining.

  Any of these general-purpose timers can be used to generate PWM outputs.

  TIM2, TIM3, TIM4, TIM5 all have independent DMA request generation. They are capable of handling quadrature (incremental) encoder signals and the digital outputs from 1 to 4 hall-effect sensors.

- **TIM9, TIM10, TIM11, TIM12, TIM13, and TIM14**

  These timers are based on a 16-bit auto-reload upcounter and a 16-bit prescaler. TIM10, TIM11, TIM13, and TIM14 feature one independent channel, whereas TIM9 and TIM12 have two independent channels for input capture/output compare, PWM or one-pulse mode output. They can be synchronized with the TIM2, TIM3, TIM4, TIM5 full-featured general-purpose timers. They can also be used as simple time bases.

3.23.3 Basic timers TIM6 and TIM7

These timers are mainly used for DAC trigger and waveform generation. They can also be used as a generic 16-bit time base.

TIM6 and TIM7 support independent DMA request generation.

3.23.4 Low-power timer (LPTIM1)

The low-power timer has an independent clock and is running also in Stop mode if it is clocked by LSE, LSI or an external clock. It is able to wakeup the devices from Stop mode.

This low-power timer supports the following features:

- 16-bit up counter with 16-bit autoreload register
- 16-bit compare register
- Configurable output: pulse, PWM
- Continuous / one-shot mode
- Selectable software / hardware input trigger
- Selectable clock source:
- Internal clock source: LSE, LSI, HSI or APB clock
- External clock source over LPTIM input (working even with no internal clock source running, used by the Pulse Counter Application)
- Programmable digital glitch filter
- Encoder mode

3.23.5 Independent watchdog

The independent watchdog is based on a 12-bit downcounter and 8-bit prescaler. It is clocked from an independent 32 kHz internal RC and as it operates independently from the main clock, it can operate in Stop and Standby modes. It can be used either as a watchdog to reset the device when a problem occurs, or as a free-running timer for application timeout management. It is hardware- or software-configurable through the option bytes.

3.23.6 Window watchdog

The window watchdog is based on a 7-bit downcounter that can be set as free-running. It can be used as a watchdog to reset the device when a problem occurs. It is clocked from the main clock. It has an early warning interrupt capability and the counter can be frozen in debug mode.

3.23.7 SysTick timer

This timer is dedicated to real-time operating systems, but could also be used as a standard downcounter. It features:

- A 24-bit downcounter
- Autoreload capability
- Maskable system interrupt generation when the counter reaches 0
- Programmable clock source

3.24 Inter-integrated circuit interface (I^2C)

The devices embed four I2Cs. Refer to table *Table 7: I2C implementation* for the features implementation.

The I^2C bus interface handles communications between the microcontroller and the serial I^2C bus. It controls all I^2C bus-specific sequencing, protocol, arbitration and timing.

The I2C peripheral supports:

- I^2C-bus specification and user manual rev. 5 compatibility:
  - Target and controller modes, multicontroller capability
  - Standard-mode (Sm), with a bitrate up to 100 kbit/s
  - Fast-mode (Fm), with a bitrate up to 400 kbit/s
  - Fast-mode Plus (Fm+), with a bitrate up to 1 Mbit/s and 20 mA output drive I/Os
  - 7-bit and 10-bit addressing mode, multiple 7-bit slave addresses
  - Programmable setup and hold times
  - Optional clock stretching
- System Management Bus (SMBus) specification rev 2.0 compatibility:
  - Hardware PEC (Packet Error Checking) generation and verification with ACK control
  - Address resolution protocol (ARP) support
  - SMBus alert
- Power System Management Protocol (PMBus™) specification rev 1.1 compatibility
- Independent clock: a choice of independent clock sources allowing the I2C communication speed to be independent from the PCLK reprogramming
- Programmable analog and digital noise filters
- 1-byte buffer with DMA capability

Table 7. I2C implementation

I2C features(1)	I2C1	I2C2	I2C3	I2C4
Standard-mode (up to 100 kbit/s)	X	X	X	X
Fast-mode (up to 400 kbit/s)	X	X	X	X
Fast-mode Plus with 20 mA output drive I/Os (up to 1 Mbit/s)	X	X	X	X
Programmable analog and digital noise filters	X	X	X	X
SMBus/PMBus hardware support	X	X	X	X
Independent clock	X	X	X	X

1. X: supported.

3.25 Universal synchronous/asynchronous receiver transmitters (USART)

The devices embed USART. Refer to *Table 8: USART implementation* for the features implementation.

The universal synchronous asynchronous receiver transmitter (USART) offers a flexible means of full-duplex data exchange with external equipment requiring an industry standard NRZ asynchronous serial data format.

The USART peripheral supports:

- Full-duplex asynchronous communications
- Configurable oversampling method by 16 or 8 to give flexibility between speed and clock tolerance
- Dual clock domain allowing convenient baud rate programming independent from the PCLK reprogramming
- A common programmable transmit and receive baud rate of up to 27 Mbit/s when the USART clock source is system clock frequency (max is 216 MHz) and oversampling by 8 is used.
- Auto baud rate detection
- Programmable data word length (7 or 8 or 9 bits) word length
- Programmable data order with MSB-first or LSB-first shifting
- Programmable parity (odd, even, no parity)
- Configurable stop bits (1 or 1.5 or 2 stop bits)
- Synchronous mode and clock output for synchronous communications
- Single-wire half-duplex communications
- Separate signal polarity control for transmission and reception
- Swappable Tx/Rx pin configuration
- Hardware flow control for modem and RS-485 transceiver
- Multiprocessor communications
- LIN master synchronous break send capability and LIN slave break detection capability
- IrDA SIR encoder decoder supporting 3/16 bit duration for normal mode
- Smartcard mode (T = 0 and T = 1 asynchronous protocols for Smartcards as defined in the ISO/IEC 7816-3 standard)
- Support for Modbus communication

Table 8 summarizes the implementation of all U(S)ARTs instances

Table 8. USART implementation

features(1)	USART1/2/3/6	UART4/5/7/8
Data Length	7, 8 and 9 bits	
Hardware flow control for modem	X	X
Continuous communication using DMA	X	X
Multiprocessor communication	X	X
Synchronous mode	X	-

Table 8. USART implementation (continued)

features[1]	USART1/2/3/6	UART4/5/7/8
Smartcard mode	X	-
Single-wire half-duplex communication	X	X
IrDA SIR ENDEC block	X	X
LIN mode	X	X
Dual clock domain	X	X
Receiver timeout interrupt	X	X
Modbus communication	X	X
Auto baud rate detection	X	X
Driver Enable	X	X

1. X: supported.

3.26 Serial peripheral interface (SPI)/inter- integrated sound interfaces (I2S)

The devices feature up to six SPIs in slave and master modes in full-duplex and simplex communication modes. SPI1, SPI4, SPI5, and SPI6 can communicate at up to 54 Mbits/s, SPI2 and SPI3 can communicate at up to 27 Mbit/s. The 3-bit prescaler gives 8 master mode frequencies and the frame is configurable from 4 to 16 bits. The SPI interfaces support NSS pulse mode, TI mode and Hardware CRC calculation. All the SPIs can be served by the DMA controller.

Three standard I^2S interfaces (multiplexed with SPI1, SPI2 and SPI3) are available. They can be operated in master or slave mode, in simplex communication modes, and can be configured to operate with a 16-/32-bit resolution as an input or output channel. Audio sampling frequencies from 8 kHz up to 192 kHz are supported. When either or both of the I^2S interfaces is/are configured in master mode, the master clock can be output to the external DAC/CODEC at 256 times the sampling frequency.

All I2Sx can be served by the DMA controller.

3.27 Serial audio interface (SAI)

The devices embed two serial audio interfaces.

The serial audio interface is based on two independent audio subblocks which can operate as transmitter or receiver with their FIFO. Many audio protocols are supported by each block: I2S standards, LSB or MSB-justified, PCM/DSP, TDM, AC’97 and SPDIF output, supporting audio sampling frequencies from 8 kHz up to 192 kHz. Both subblocks can be configured in master or in slave mode.

In master mode, the master clock can be output to the external DAC/CODEC at 256 times of the sampling frequency.

The two sub-blocks can be configured in synchronous mode when full-duplex mode is required.

SAI1 and SAI2 can be served by the DMA controller

3.28 SPDIFRX Receiver Interface (SPDIFRX)

The SPDIFRX peripheral, is designed to receive an S/PDIF flow compliant with IEC-60958 and IEC-61937. These standards support simple stereo streams up to high sample rate, and compressed multi-channel surround sound, such as those defined by Dolby or DTS (up to 5.1).

The main features of the SPDIFRX are the following:

- Up to 4 inputs available
- Automatic symbol rate detection
- Maximum symbol rate: 12.288 MHz
- Stereo stream from 32 to 192 kHz supported
- Supports Audio IEC-60958 and IEC-61937, consumer applications
- Parity bit management
- Communication using DMA for audio samples
- Communication using DMA for control and user channel information
- Interrupt capabilities

The SPDIFRX receiver provides all the necessary features to detect the symbol rate, and decode the incoming data stream. The user can select the wanted SPDIF input, and when a valid signal is available, the SPDIFRX re-samples the incoming signal, decodes the manchester stream, recognizes frames, sub-frames and blocks elements. It delivers to the CPU decoded data, and associated status flags.

The SPDIFRX also offers a signal named spdif_frame_sync, which toggles at the S/PDIF sub-frame rate that is used to compute the exact sample rate for clock drift algorithms.

3.29 Audio PLL (PLLI2S)

The devices feature an additional dedicated PLL for audio I^2S and SAI applications. It allows to achieve error-free I^2S sampling clock accuracy without compromising on the CPU performance, while using USB peripherals.

The PLLI2S configuration can be modified to manage an I^2S/SAI sample rate change without disabling the main PLL (PLL) used for CPU, USB and Ethernet interfaces.

The audio PLL can be programmed with very low error to obtain sampling rates ranging from 8 KHz to 192 KHz.

In addition to the audio PLL, a master clock input pin can be used to synchronize the I^2S/SAI flow with an external PLL (or Codec output).

3.30 Audio and LCD PLL (PLLSAI)

An additional PLL dedicated to audio and LCD-TFT is used for SAI1 peripheral in case the PLLI2S is programmed to achieve another audio sampling frequency (49.152 MHz or 11.2896 MHz) and the audio application requires both sampling frequencies simultaneously.

The PLLSAI is also used to generate the LCD-TFT clock.

3.31 SD/SDIO/MMC card host interface (SDMMC)

SDMMC host interfaces are available, that support the MultiMediaCard System Specification Version 4.2 in three different databus modes: 1-bit (default), 4-bit and 8-bit.

The interface allows data transfer at up to 50 MHz, and is compliant with the SD Memory Card Specification Version 2.0.

The SDMMC Card Specification Version 2.0 is also supported with two different databus modes: 1-bit (default) and 4-bit.

The current version supports only one SD/SDMMC/MMC4.2 card at any one time and a stack of MMC4.1 or previous.

The SDMMC can be served by the DMA controller

3.32 Ethernet MAC interface with dedicated DMA and IEEE 1588 support

The devices provide an IEEE-802.3-2002-compliant media access controller (MAC) for ethernet LAN communications through an industry-standard medium-independent interface (MII) or a reduced medium-independent interface (RMII). The microcontroller requires an external physical interface device (PHY) to connect to the physical LAN bus (twisted-pair, fiber, etc.). The PHY is connected to the device MII port using 17 signals for MII or 9 signals for RMII, and can be clocked using the 25 MHz (MII) from the microcontroller.

The devices include the following features:

- Supports 10 and 100 Mbit/s rates
- Dedicated DMA controller allowing high-speed transfers between the dedicated SRAM and the descriptors
- Tagged MAC frame support (VLAN support)
- Half-duplex (CSMA/CD) and full-duplex operation
- MAC control sublayer (control frames) support
- 32-bit CRC generation and removal
- Several address filtering modes for physical and multicast address (multicast and group addresses)
- 32-bit status code for each transmitted or received frame
- Internal FIFOs to buffer transmit and receive frames. The transmit FIFO and the receive FIFO are both 2 Kbytes.
- Supports hardware PTP (precision time protocol) in accordance with IEEE 1588 2008 (PTP V2) with the time stamp comparator connected to the TIM2 input
- Triggers interrupt when system time becomes greater than target time

3.33 Controller area network (bxCAN)

The three CANs are compliant with the 2.0A and B (active) specifications with a bit rate up to 1 Mbit/s. They can receive and transmit standard frames with 11-bit identifiers as well as extended frames with 29-bit identifiers. Each CAN has three transmit mailboxes, two receive FIFOS with 3 stages and 28 shared scalable filter banks (all of them can be used even if one CAN is used). 256 bytes of SRAM are allocated for CAN1 and CAN2. 512 bytes of SRAM are dedicated for CAN3.

3.34 Universal serial bus on-the-go full-speed (OTG_FS)

The devices embed an USB OTG full-speed device/host/OTG peripheral with integrated transceivers. The USB OTG FS peripheral is compliant with the USB 2.0 specification and with the OTG 2.0 specification. It has software-configurable endpoint setting and supports suspend/resume. The USB OTG controller requires a dedicated 48 MHz clock that is generated by a PLL connected to the HSE oscillator.

The major features are:

- Combined Rx and Tx FIFO size of 1.28 Kbytes with dynamic FIFO sizing
- Supports the session request protocol (SRP) and host negotiation protocol (HNP)
- 1 bidirectional control endpoint + 5 IN endpoints + 5 OUT endpoints
- 12 host channels with periodic OUT support
- Software configurable to OTG1.3 and OTG2.0 modes of operation
- USB 2.0 LPM (Link Power Management) support
- Battery Charging Specification Revision 1.2 support
- Internal FS OTG PHY support
- HNP/SNP/IP inside (no need for any external resistor)

For the OTG/Host modes, a power switch is needed in case bus-powered devices are connected

3.35 Universal serial bus on-the-go high-speed (OTG_HS)

The devices embed a USB OTG high-speed (up to 480 Mbit/s) device/host/OTG peripheral. The USB OTG HS supports both full-speed and high-speed operations. It integrates the transceivers for full-speed operation (12 Mbit/s) and features a UTMI low-pin interface (ULPI) for high-speed operation (480 Mbit/s). When using the USB OTG HS in HS mode, an external PHY device connected to the ULPI is required.

The USB OTG HS peripheral is compliant with the USB 2.0 specification and with the OTG 2.0 specification. It has software-configurable endpoint setting and supports suspend/resume. The USB OTG controller requires a dedicated 48 MHz clock that is generated by a PLL connected to the HSE oscillator.

The major features are:

- Combined Rx and Tx FIFO size of 4 Kbytes with dynamic FIFO sizing
- Supports the session request protocol (SRP) and host negotiation protocol (HNP)
- 8 bidirectional endpoints
- 16 host channels with periodic OUT support

- Software configurable to OTG1.3 and OTG2.0 modes of operation
- USB 2.0 LPM (Link Power Management) support
- Battery Charging Specification Revision 1.2 support
- Internal FS OTG PHY support
- External HS or HS OTG operation supporting ULPI in SDR mode. The OTG PHY is connected to the microcontroller ULPI port through 12 signals. It can be clocked using the 60 MHz output.
- Internal USB DMA
- HNP/SNP/IP inside (no need for any external resistor)
- for OTG/Host modes, a power switch is needed in case bus-powered devices are connected

3.36 High-definition multimedia interface (HDMI) - consumer electronics control (CEC)

The devices embed a HDMI-CEC controller that provides hardware support for the Consumer Electronics Control (CEC) protocol (Supplement 1 to the HDMI standard).

This protocol provides high-level control functions between all audiovisual products in an environment. It is specified to operate at low speeds with minimum processing and memory overhead. It has a clock domain independent from the CPU clock, allowing the HDMI-CEC controller to wakeup the MCU from Stop mode on data reception.

3.37 Digital camera interface (DCMI)

The devices embed a camera interface that can connect with camera modules and CMOS sensors through an 8-bit to 14-bit parallel interface, to receive video data. The camera interface can sustain a data transfer rate up to 54 Mbytes/s in 8-bit mode at 54 MHz. It features:

- Programmable polarity for the input pixel clock and synchronization signals
- Parallel data communication can be 8-, 10-, 12- or 14-bit
- Supports 8-bit progressive video monochrome or raw bayer format, YCbCr 4:2:2 progressive video, RGB 565 progressive video or compressed data (like JPEG)
- Supports continuous mode or snapshot (a single frame) mode
- Capability to automatically crop the image

3.38 Management Data Input/Output (MDIO) slaves

The devices embed a MDIO slave interface it includes the following features:

- 32 MDIO Registers addresses, each of which is managed using separate input and output data registers:
  - 32 x 16-bit firmware read/write, MDIO read-only output data registers
  - 32 x 16-bit firmware read-only, MDIO write-only input data registers
- Configurable slave (port) address
- Independently maskable interrupts/events:
  - MDIO Register write
  - MDIO Register read
  - MDIO protocol error
- Able to operate in and wake up from STOP mode

3.39 Cryptographic acceleration

The devices embed a cryptographic accelerator. This cryptographic accelerator provides a set of hardware acceleration for the advanced cryptographic algorithms usually needed to provide confidentiality, authentication, data integrity and non repudiation when exchanging messages with a peer.

- These algorithms consist of:

  Encryption/Decryption
  - DES/TDES (data encryption standard/triple data encryption standard): ECB (electronic codebook) and CBC (cipher block chaining) chaining algorithms, 64-, 128- or 192-bit key
  - AES (advanced encryption standard): ECB, CBC, GCM, CCM, and CTR (counter mode) chaining algorithms, 128, 192 or 256-bit key

  Universal hash
  - SHA-1 and SHA-2 (secure hash algorithms)
  - MD5
  - HMAC

The cryptographic accelerator supports DMA request generation.

3.40 True random number generator (RNG)

The RNG is a true random number generator that provides full entropy outputs to the application as 32-bit samples. It is composed of a live entropy source (analog) and an internal conditioning component.

All the devices embed an RNG that delivers 32-bit random numbers generated by an integrated analog circuit.

3.41 General-purpose input/outputs (GPIOs)

Each of the GPIO pins can be configured by software as output (push-pull or open-drain, with or without pull-up or pull-down), as input (floating, with or without pull-up or pull-down) or as peripheral alternate function. Most of the GPIO pins are shared with digital or analog alternate functions. All GPIOs are high-current-capable and have speed selection to better manage internal noise, power consumption and electromagnetic emission.

The I/O configuration can be locked if needed by following a specific sequence in order to avoid spurious writing to the I/Os registers.

A fast I/O handling allows a maximum I/O toggling up to 108 MHz.

3.42 Analog-to-digital converters (ADCs)

Three 12-bit analog-to-digital converters are embedded and each ADC shares up to 16 external channels, performing conversions in the single-shot or scan mode. In scan mode, automatic conversion is performed on a selected group of analog inputs.

Additional logic functions embedded in the ADC interface allow:

- Simultaneous sample and hold
- Interleaved sample and hold

The ADC can be served by the DMA controller. An analog watchdog feature allows very precise monitoring of the converted voltage of one, some or all selected channels. An interrupt is generated when the converted voltage is outside the programmed thresholds.

To synchronize A/D conversion and timers, the ADCs could be triggered by any of TIM1, TIM2, TIM3, TIM4, TIM5, or TIM8 timer.

3.43 Digital filter for Sigma-Delta Modulators (DFSDM)

The devices embed one DFSDM with 4 digital filters modules and 8 external input serial channels (transceivers) or alternately 8 internal parallel inputs support. The DFSDM peripheral is dedicated to interface the external ΣΔ modulators to microcontroller and then to perform digital filtering of the received data streams (which represent analog value on ΣΔ modulators inputs). The DFSDM can also interface PDM (Pulse Density Modulation) microphones and perform PDM to PCM conversion and filtering in hardware. The DFSDM features optional parallel data stream inputs from microcontrollers memory (through DMA/CPU transfers into DFSDM). The DFSDM transceivers support several serial interface formats (to support various ΣΔ modulators). The DFSDM digital filter modules perform digital processing according user selected filter parameters with up to 24-bit final ADC resolution.

The DFSDM peripheral supports:

- 8 multiplexed input digital serial channels:
  - Configurable SPI interface to connect various SD modulator(s)
  - Configurable Manchester coded 1 wire interface support
  - PDM (Pulse Density Modulation) microphone input support
  - Maximum input clock frequency up to 20 MHz (10 MHz for Manchester coding)
  - Clock output for SD modulator(s): 0..20 MHz

- Alternative inputs from 8 internal digital parallel channels (up to 16 bit input resolution):
  - internal sources: device memory data streams (DMA)
- 4 digital filter modules with adjustable digital signal processing:
  - Sincxfilter: filter order/type (1..5), oversampling ratio (up to 1..1024)
  - integrator: oversampling ratio (1..256)
- Up to 24-bit output data resolution, signed output data format
- Automatic data offset correction (offset stored in register by user)
- Continuous or single conversion
- Start-of-conversion triggered by:
  - Software trigger
  - Internal timers
  - External events
  - Start-of-conversion synchronously with first digital filter module (DFSDM0)
- Analog watchdog feature:
  - Low value and high value data threshold registers
  - Dedicated configurable Sincx digital filter (order = 1..3, oversampling ratio = 1..32)
  - Input from final output data or from selected input digital serial channels
  - Continuous monitoring independently from standard conversion
- Short circuit detector to detect saturated analog input values (bottom and top range):
  - Up to 8-bit counter to detect 1..256 consecutive 0's or 1's on serial data stream
  - Monitoring continuously each input serial channel
- Break signal generation on analog watchdog event or on short circuit detector event
- Extremes detector:
  - Storage of minimum and maximum values of final conversion data
  - Refreshed by software
- DMA capability to read the final conversion data
- Interrupts: end of conversion, overrun, analog watchdog, short circuit, input serial channel clock absence
- "regular" or "injected" conversions:
  - "regular" conversions can be requested at any time or even in continuous mode without having any impact on the timing of "injected" conversions
  - "injected" conversions for precise timing and with high conversion priority

Table 9. DFSDM implementation

DFSDM features	DFSDM1
Number of filters: x (DFSDM_FLTx)	4
Number of input transceivers/channels: y (DFSDM_CHy)	8
Internal ADC parallel input support	-
Number of external triggers (JEXTSEL size)	32
ID register support	-

3.44 Temperature sensor

The temperature sensor has to generate a voltage that varies linearly with the temperature. The conversion range is between 1.7 V and 3.6 V. The temperature sensor is internally connected to the same input channel as V_{BAT}, ADC1_IN18, which is used to convert the sensor output voltage into a digital value. When the temperature sensor and V_{BAT} conversion are enabled at the same time, only V_{BAT} conversion is performed.

As the offset of the temperature sensor varies from chip to chip due to process variation, the internal temperature sensor is mainly suitable for applications that detect temperature changes instead of absolute temperatures. If an accurate temperature reading is needed, then an external temperature sensor part should be used.

3.45 Digital-to-analog converter (DAC)

The two 12-bit buffered DAC channels can be used to convert two digital signals into two analog voltage signal outputs.

This dual digital Interface supports the following features:

- Two DAC converters: one for each output channel
- 8-bit or 12-bit monotonic output
- Left or right data alignment in 12-bit mode
- Synchronized update capability
- Noise-wave generation
- Triangular-wave generation
- Dual DAC channel independent or simultaneous conversions
- DMA capability for each channel
- External triggers for conversion
- Input voltage reference V_{REF+}

Eight DAC trigger inputs are used in the device. The DAC channels are triggered through the timer update outputs that are also connected to different DMA streams.

3.46 Serial wire JTAG debug port (SWJ-DP)

The Arm SWJ-DP interface is embedded, and is a combined JTAG and serial wire debug port that enables either a serial wire debug or a JTAG probe to be connected to the target.

The debug is performed using 2 pins only instead of 5 required by the JTAG (JTAG pins could be re-use as GPIO with alternate function): the JTAG TMS and TCK pins are shared with SWDIO and SWCLK, respectively, and a specific sequence on the TMS pin is used to switch between JTAG-DP and SW-DP.

3.47 Embedded Trace Macrocell™

The Arm embedded trace Macrocell provides a greater visibility of the instruction and data flow inside the CPU core by streaming compressed data at a very high rate from the STM32F77xxx through a small number of ETM pins to an external hardware trace port analyzer (TPA) device. The TPA is connected to a host computer using USB, Ethernet, or

any other high-speed channel. Real-time instruction and data flow activity can be recorded and then formatted for display on the host computer that runs the debugger software. TPA hardware is commercially available from common development tool vendors.

The Embedded Trace Macrocell operates with third party debugger software tools.

3.48 DSI Host (DSIHOST)

The DSI Host is a dedicated peripheral for interfacing with MIPI® DSI compliant displays. It includes a dedicated video interface internally connected to the LTDC and a generic APB interface that can be used to transmit information to the display.

These interfaces are as follows:

- LTDC interface:
  - Used to transmit information in Video mode, in which the transfers from the host processor to the peripheral take the form of a real-time pixel stream (DPI).
  - Through a customized for mode, this interface can be used to transmit information in full bandwidth in the Adapted Command mode (DBI).
- APB slave interface:
  - Allows the transmission of generic information in Command mode, and follows a proprietary register interface.
  - Can operate concurrently with either LTDC interface in either Video mode or Adapted Command mode.
- Video mode pattern generator:
  - Allows the transmission of horizontal/vertical color bar and D-PHY BER testing pattern without any kind of stimuli.

The DSI Host main features:

- Compliant with MIPI® Alliance standards
- Interface with MIPI® D-PHY
- Supports all commands defined in the MIPI® Alliance specification for DCS:
  - Transmission of all Command mode packets through the APB interface
  - Transmission of commands in low-power and high-speed during Video mode
- Supports up to two D-PHY data lanes
- Bidirectional communication and escape mode support through data lane 0
- Supports non-continuous clock in D-PHY clock lane for additional power saving
- Supports Ultra Low-power mode with PLL disabled
- ECC and Checksum capabilities
- Support for End of Transmission Packet (EoTp)
- Fault recovery schemes
- 3D transmission support
- Configurable selection of system interfaces:
  - AMBA APB for control and optional support for Generic and DCS commands
  - Video Mode interface through LTDC
  - Adapted Command mode interface through LTDC
- Independently programmable Virtual Channel ID in

  - Video mode
  - Adapted Command mode
  - APB Slave

Video Mode interfaces features:

- LTDC interface color coding mappings into 24-bit interface:
  - 16-bit RGB, configurations 1, 2, and 3
  - 18-bit RGB, configurations 1 and 2
  - 24-bit RGB
- Programmable polarity of all LTDC interface signals
- Maximum resolution is limited by available DSI physical link bandwidth:
  - Number of lanes: 2
  - Maximum speed per lane: 500 Mbps1Gbps

Adapted interface features

Support for sending large amounts of data through the memory_write_start(WMS) and memory_write_continue(WMC) DCS commands

- LTDC interface color coding mappings into 24-bit interface:
  - 16-bit RGB, configurations 1, 2, and 3
  - 18-bit RGB, configurations 1 and 2
  - 24-bit RGB

Video mode pattern generator:

- Vertical and horizontal color bar generation without LTDC stimuli
- BER pattern without LTDC stimuli

4 Pinouts and pin description

Figure 11. STM32F77xxx LQFP100 pinout

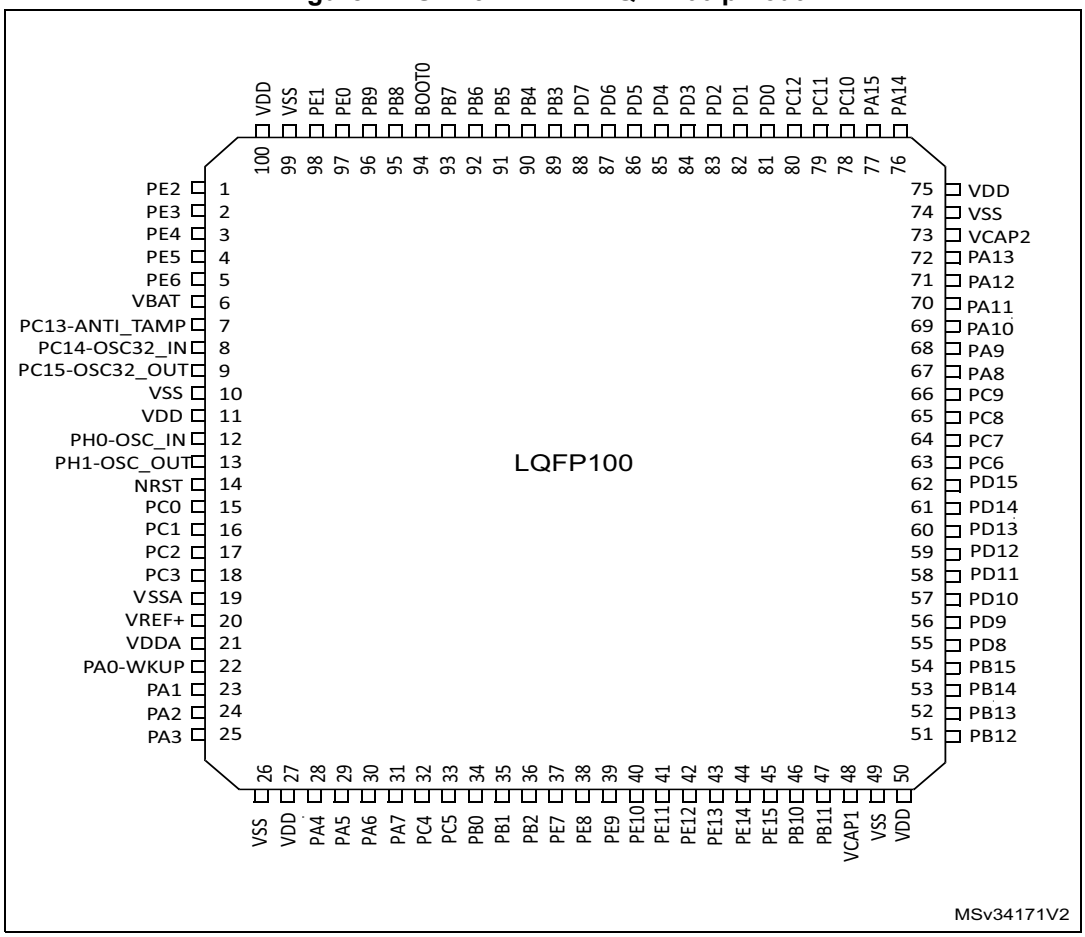

1. The above figure shows the package top view.

Figure 12. STM32F77xxx TFBGA100 ballout

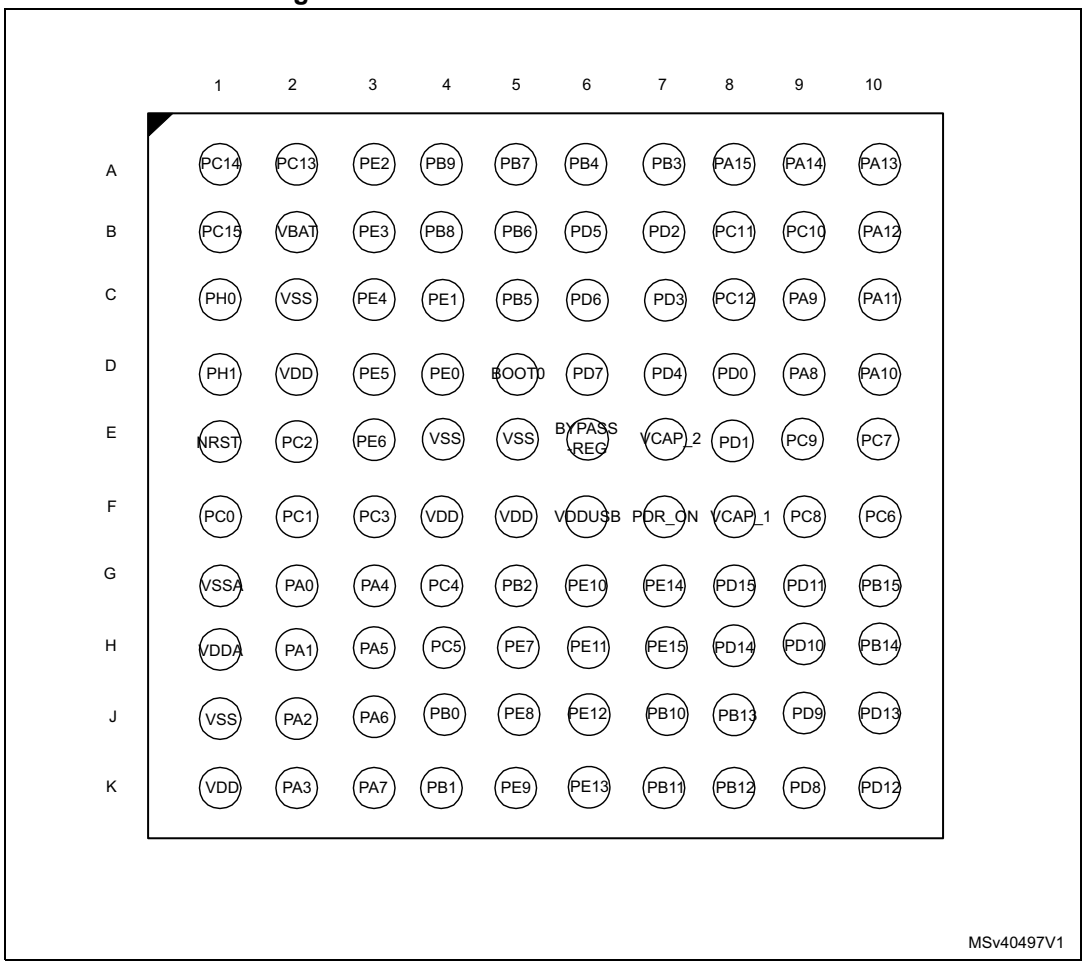

1. The above figure shows the package top view.

Figure 13. STM32F77xxx LQFP144 pinout

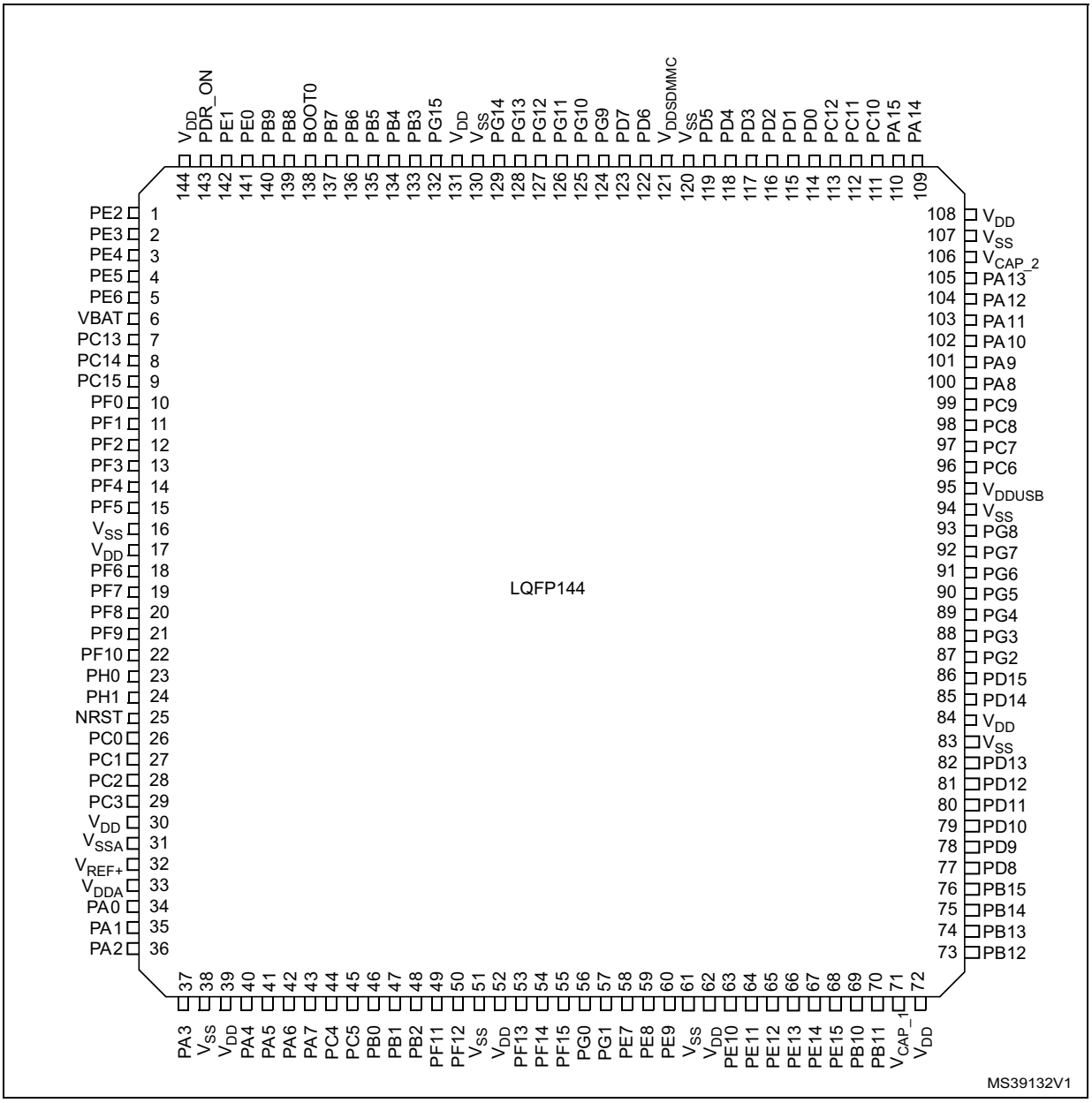

1. The above figure shows the package top view.

Figure 14. STM32F77xxx LQFP176 pinout

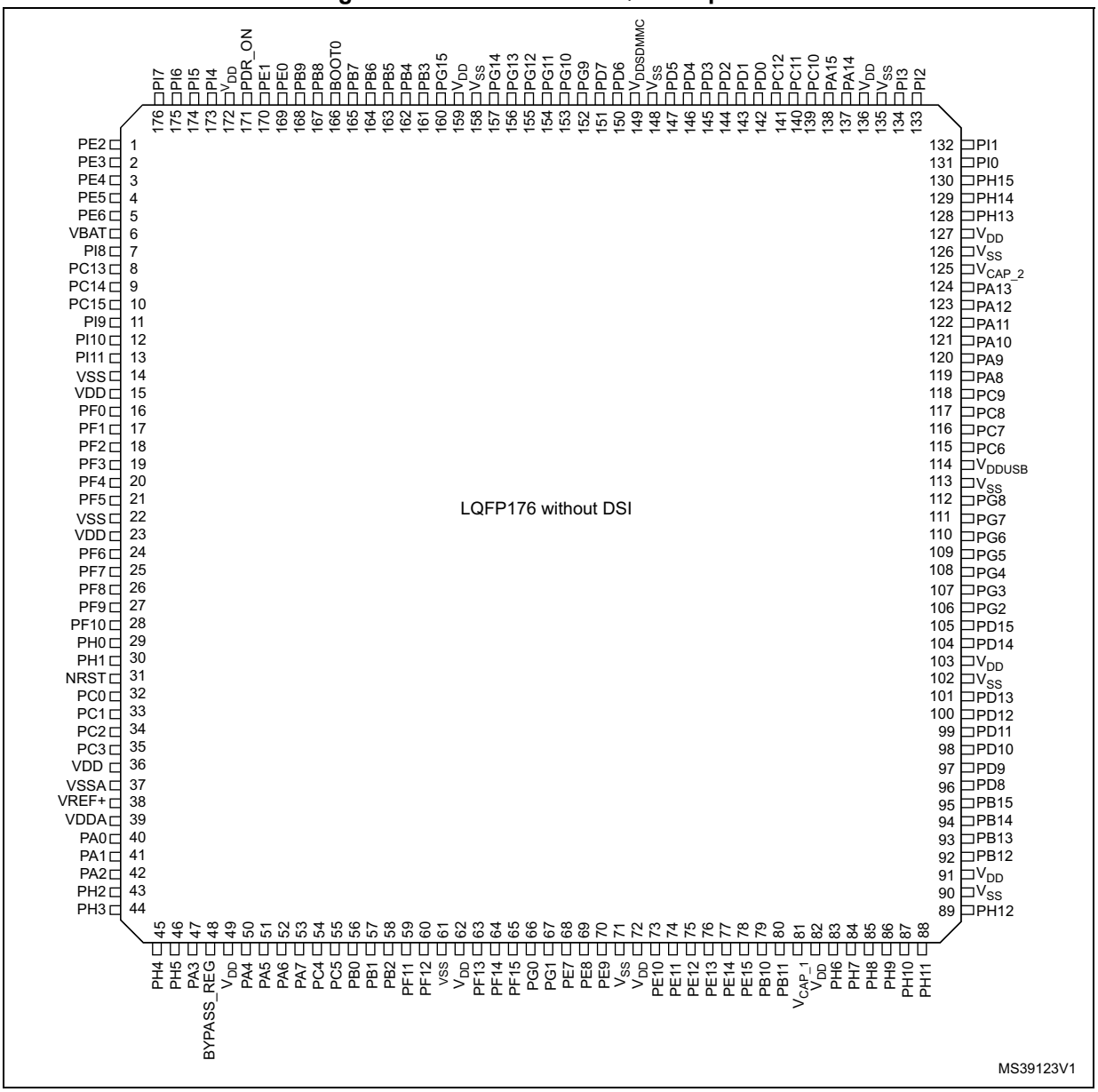

1. The above figure shows the package top view.

Figure 15. STM32F779xx LQFP176 pinout

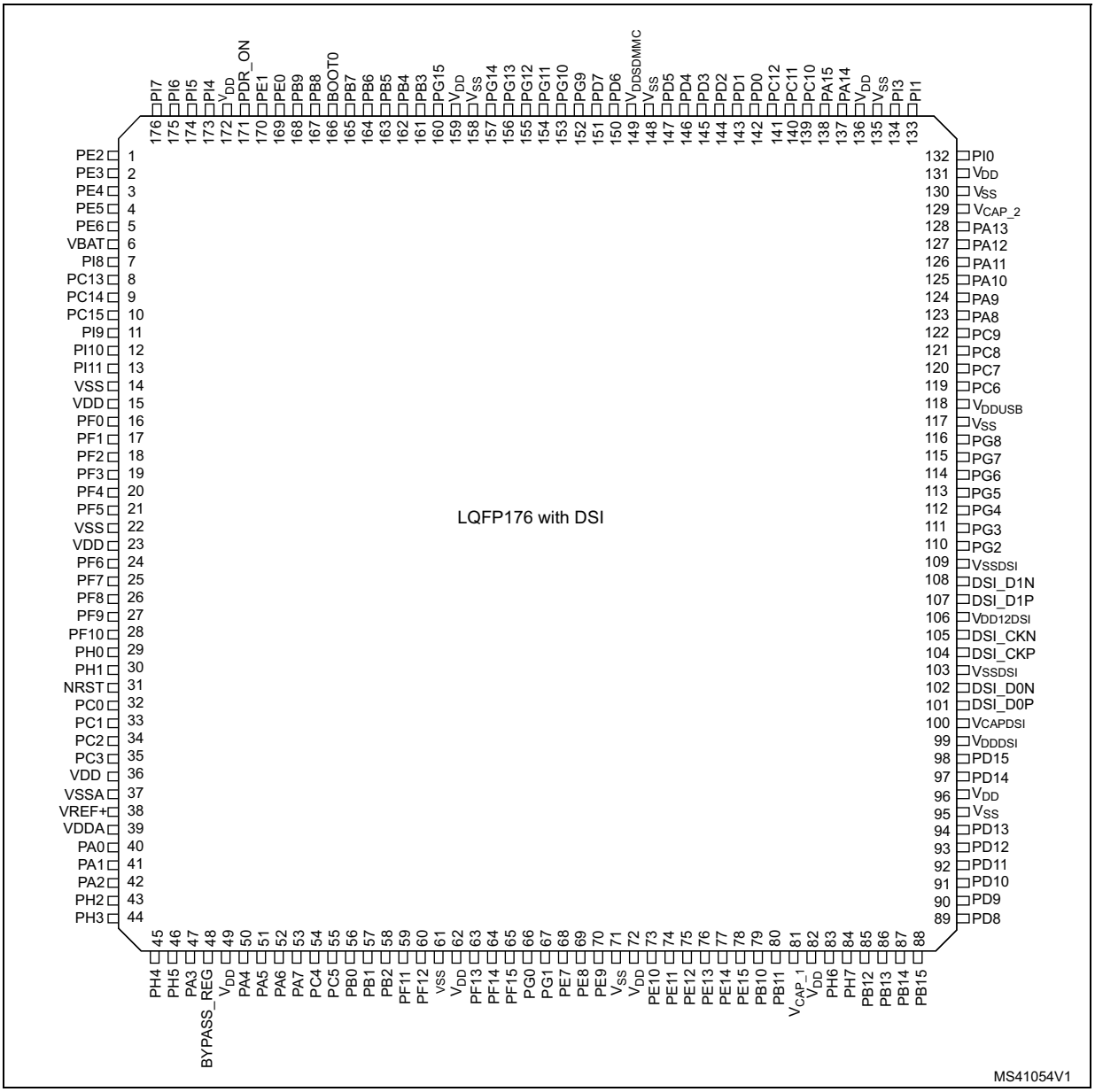

1. The above figure shows the package top view.

Figure 16. STM32F77xxx UFBGA176 ballout

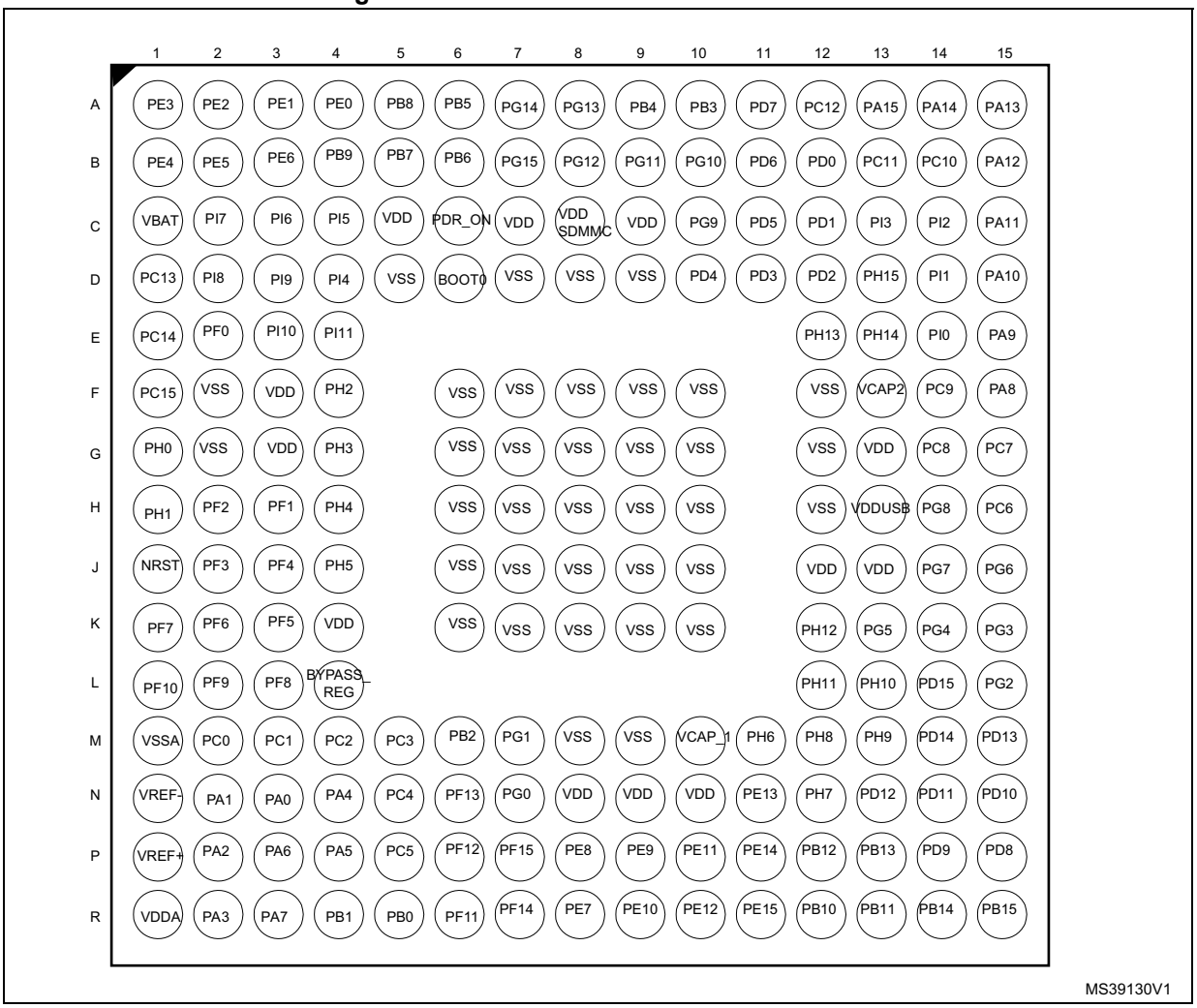

1. The above figure shows the package top view.

Note: On the UFBGA176 package, the following balls are connected to VSS for package mechanical stability and for heat dissipation purposes:

F6, F7, F8, F9, F10, G6, G7, G8, G9, G10, H6, H7, H8, H9, H10, J6, J7, J8, J9, J10, K6, K7, K8, K9, K10.

Figure 17. STM32F779Ax/STM32F778Ax WLCSP180 ballout

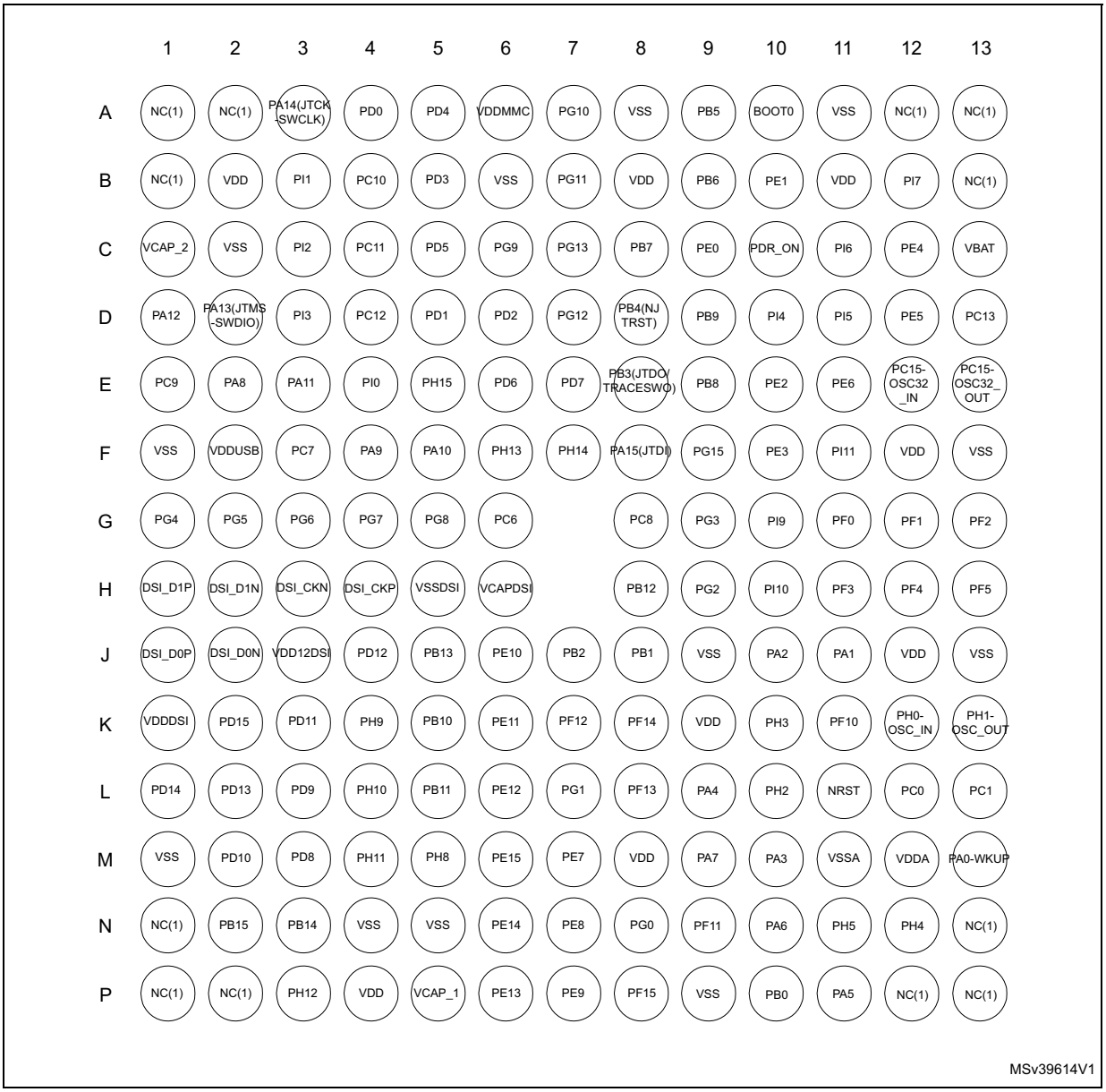

1. NC ball must not be connected to GND nor to VDD.
2. The above figure shows the package top view.

Figure 18. STM32F77xxx LQFP208 pinout

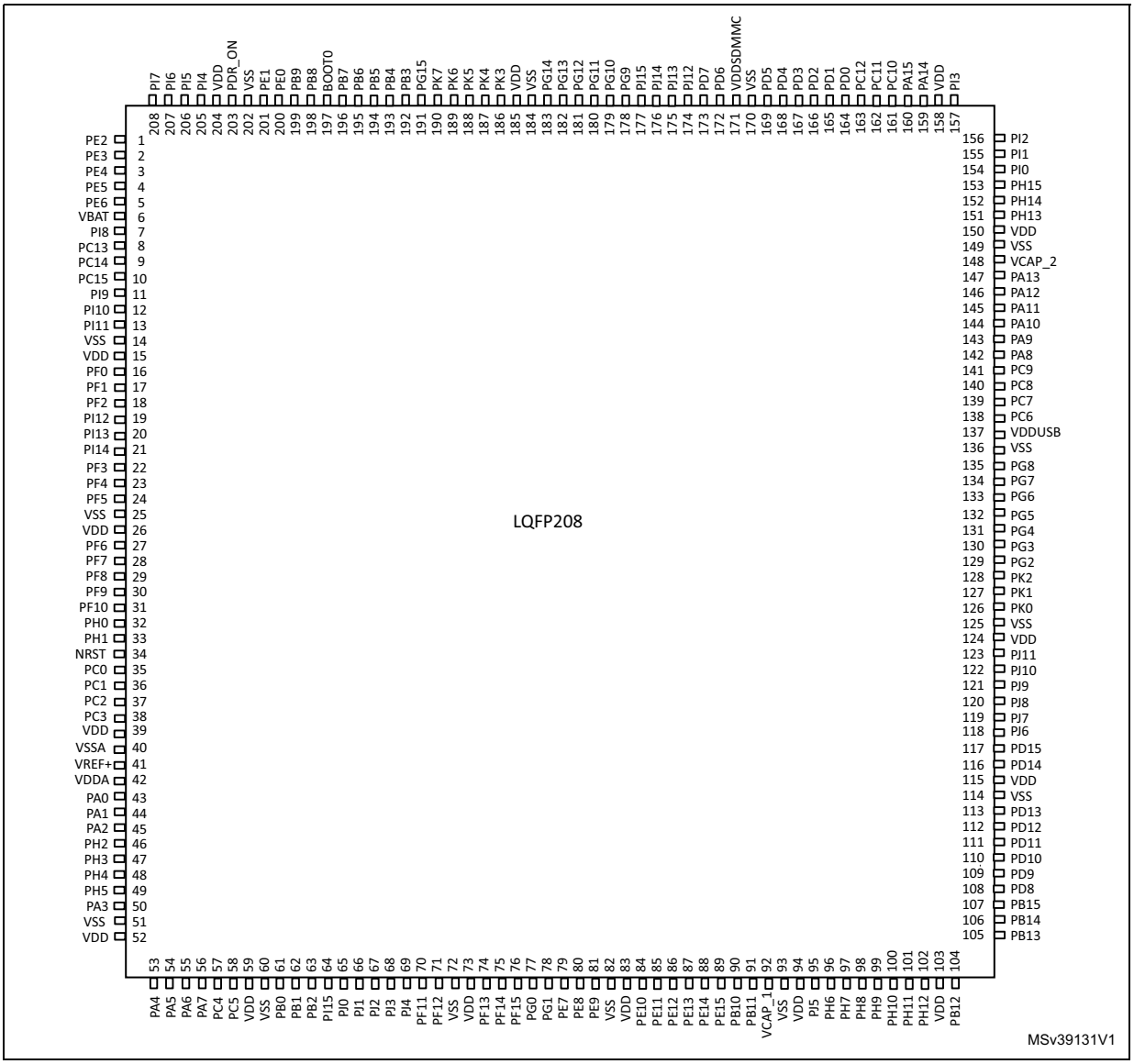

1. The above figure shows the package top view.

Figure 19. STM32F779xx LQFP208 pinout

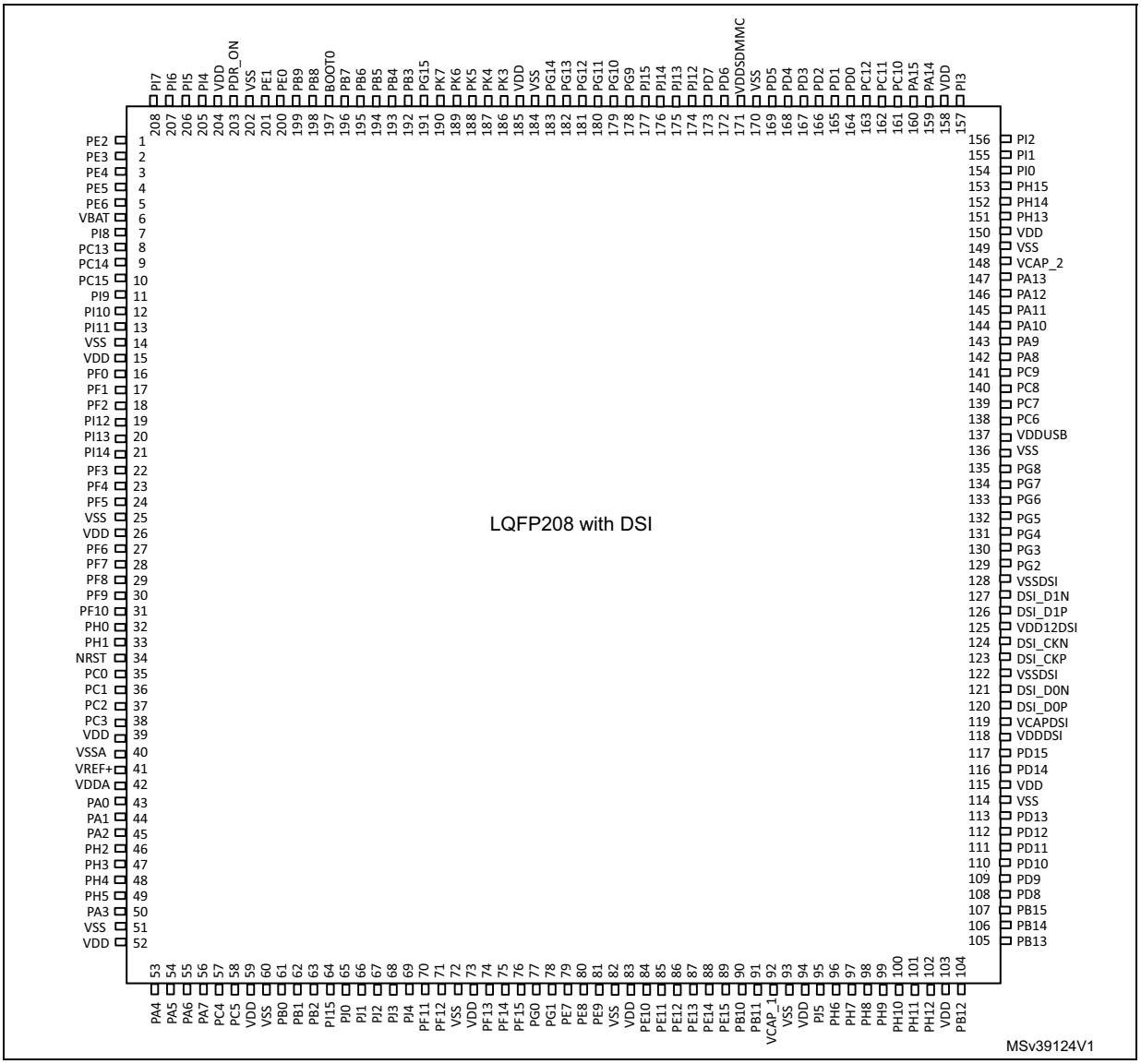

1. The above figure shows the package top view.

Figure 20. STM32F77xxx TFBGA216 ballout

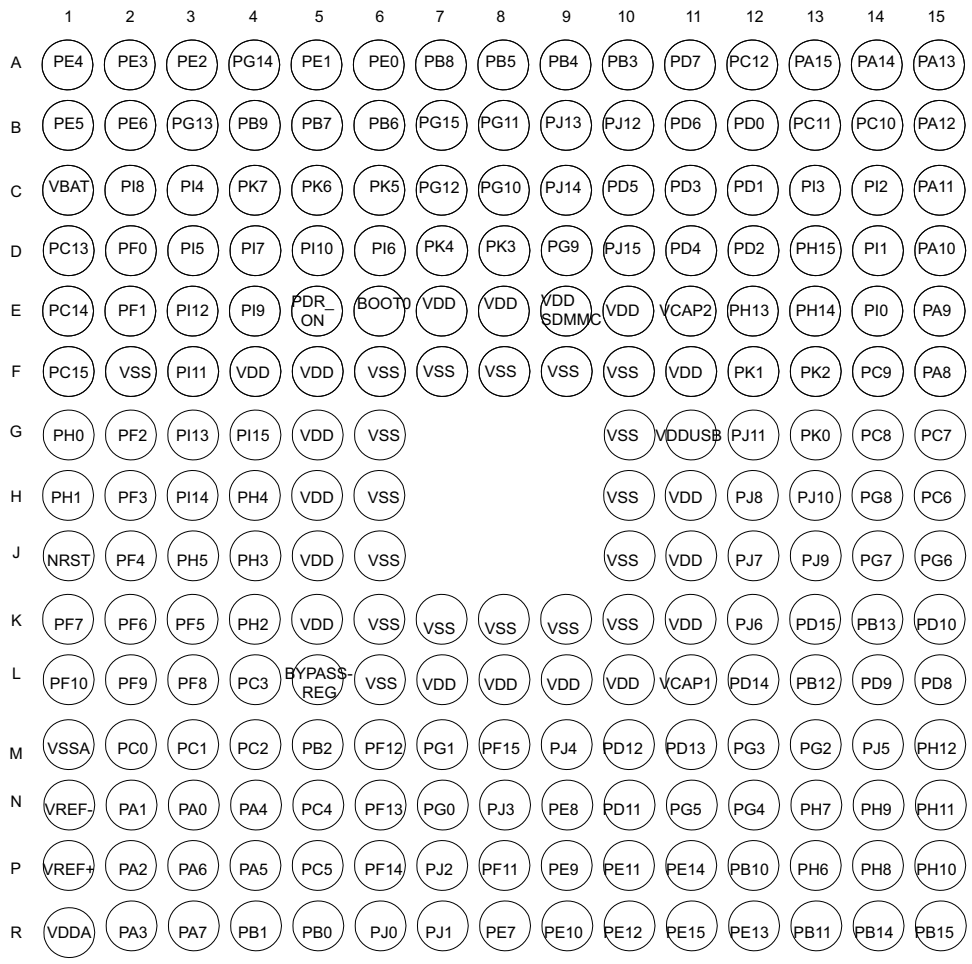

1. The above figure shows the package top view.

Figure 21. STM32F779xx TFBGA216 ballout

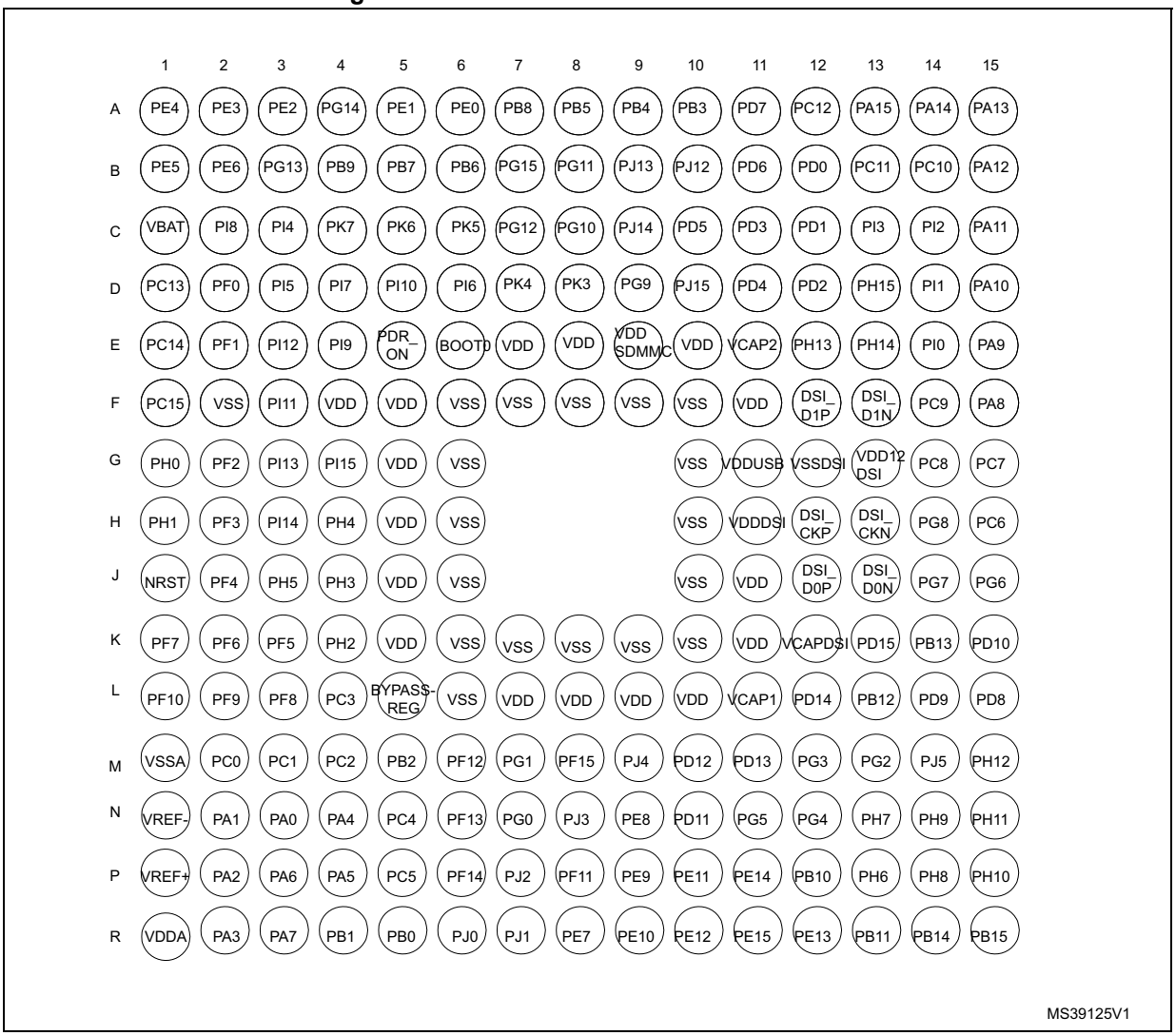

1. The above figure shows the package top view.

Table 10. Legend/abbreviations used in the pinout table

Name	Abbreviation	Definition
Pin name	Unless otherwise specified in brackets below the pin name, the pin function during and after reset is the same as the actual pin name	
Pin type	S	Supply pin
	I	Input only pin
	I/O	Input / output pin
I/O structure	FT	5 V tolerant I/O
	TTa	3.3 V tolerant I/O directly connected to ADC
	B	Dedicated BOOT pin
	RST	Bidirectional reset pin with weak pull-up resistor
Notes	Unless otherwise specified by a note, all I/Os are set as floating inputs during and after reset	
Alternate functions	Functions selected through GPIOx_AFR registers	
Additional functions	Functions directly selected/enabled through peripheral registers	

Table 11. STM32F777xx, STM32F778Ax and STM32F779xx pin and ball definitions

Pin Number											Pin name (function after reset	Pin type	I/O structure	Notes	Alternate functions	Additional functions
STM32F777xx							STM32F778Ax STM32F779xx									
TFBGA100	LQFP100	LQFP144	UFBGA176	LQFP176	LQFP208	TFBGA216	WLCSP180(1)	LQFP176	LQFP208	TFBGA216						
A3	1	1	A2	1	1	A3	E10	1	1	A3	PE2	I/O	FT	-	TRACECLK, SPI4_SCK, SAI1_MCLK_A, QUADSPI_BK1_IO2, ETH_MII_TXD3, FMC_A23, EVENTOUT	-
B3	2	2	A1	2	2	A2	F10	2	2	A2	PE3	I/O	FT	-	TRACED0, SAI1_SD_B, FMC_A19, EVENTOUT	-

Table 11. STM32F777xx, STM32F778Ax and STM32F779xx pin and ball definitions (continued)

Pin Number											Pin name (function after reset	Pin type	I/O structure	Notes	Alternate functions	Additional functions
STM32F777xx							STM32F778Ax STM32F779xx									
TFBGA100	LQFP100	LQFP144	UFBGA176	LQFP176	LQFP208	TFBGA216	WLCSP180(1)	LQFP176	LQFP208	TFBGA216						
C3	3	3	B1	3	3	A1	C12	3	3	A1	PE4	I/O	FT	-	TRACED1, SPI4_NSS, SAI1_FS_A, DFSDM1_DATIN3, FMC_A20, DCMI_D4, LCD_B0, EVENTOUT	-
D3	4	4	B2	4	4	B1	D12	4	4	B1	PE5	I/O	FT	-	TRACED2, TIM9_CH1, SPI4_MISO, SAI1_SCK_A, DFSDM1_CKIN3, FMC_A21, DCMI_D6, LCD_G0, EVENTOUT	-
E3	5	5	B3	5	5	B2	E11	5	5	B2	PE6	I/O	FT	-	TRACED3, TIM1_BKIN2, TIM9_CH2, SPI4_MOSI, SAI1_SD_A, SAI2_MCLK_B, FMC_A22, DCMI_D7, LCD_G1, EVENTOUT	-
-	-	-	-	-	-	G6	-	-	-	G6	VSS	S	-	-	-	-
-	-	-	-	-	-	F5	-	-	-	F5	VDD	S	-	-	-	-
B2	6	6	C1	6	6	C1	C13	6	6	C1	VBAT	S	-	-	-	-
-	-	-	D2	7	7	C2	NC	7	7	C2	PI8	I/O	FT	(2)	EVENTOUT	RTC_TAMP2/ RTC_TS/ WKUP5
A2	7	7	D1	8	8	D1	D13	8	8	D1	PC13	I/O	FT	(2)	EVENTOUT	RTC_TAMP1/ RTC_TS/ RTC_OUT/ WKUP4
A1	8	8	E1	9	9	E1	E12	9	9	E1	PC14-OSC32_IN	I/O	FT	(2) (3)	EVENTOUT	OSC32_IN
B1	9	9	F1	10	10	F1	E13	10	10	F1	PC15-OSC32_OUT	I/O	FT	(2) (3)	EVENTOUT	OSC32_OUT
-	-	-	-	-	-	G5	-	-	-	G5	VDD	S	-	-	-	-
-	-	-	D3	11	11	E4	G10	11	11	E4	PI9	I/O	FT	-	UART4_RX, CAN1_RX, FMC_D30, LCD_VSYNC, EVENTOUT	-
-	-	-	E3	12	12	D5	H10	12	12	D5	PI10	I/O	FT	-	ETH_MII_RX_ER, FMC_D31, LCD_HSYNC, EVENTOUT	-
-	-	-	E4	13	13	F3	F11	13	13	F3	PI11	I/O	FT	-	LCD_G6, OTG_HS_ULPI_DIR, EVENTOUT	WKUP6
-	-	-	F2	14	14	F2	F13	14	14	F2	VSS	S	-	-	-	-

Table 11. STM32F777xx, STM32F778Ax and STM32F779xx pin and ball definitions (continued)

Pin Number											Pin name (function after reset	Pin type	I/O structure	Notes	Alternate functions	Additional functions
STM32F777xx							STM32F778Ax STM32F779xx									
TFBGA100	LQFP100	LQFP144	UFBGA176	LQFP176	LQFP208	TFBGA216	WLCSP180(1)	LQFP176	LQFP208	TFBGA216						
-	-	-	F3	15	15	F4	F12	15	15	F4	VDD	S	-	-	-	-
-	-	10	E2	16	16	D2	G11	16	16	D2	PF0	I/O	FT	-	I2C2_SDA, FMC_A0, EVENTOUT	-
-	-	11	H3	17	17	E2	G12	17	17	E2	PF1	I/O	FT	-	I2C2_SCL, FMC_A1, EVENTOUT	-
-	-	12	H2	18	18	G2	G13	18	18	G2	PF2	I/O	FT	-	I2C2_SMBA, FMC_A2, EVENTOUT	-
-	-	-	-	-	19	E3	NC	-	19	E3	PI12	I/O	FT	-	LCD_HSYNC, EVENTOUT	-
-	-	-	-	-	20	G3	NC	-	20	G3	PI13	I/O	FT	-	LCD_VSYNC, EVENTOUT	-
-	-	-	-	-	21	H3	NC	-	21	H3	PI14	I/O	FT	-	LCD_CLK, EVENTOUT	-
-	-	13	J2	19	22	H2	H11	19	22	H2	PF3	I/O	FT	-	FMC_A3, EVENTOUT	ADC3_IN9
-	-	14	J3	20	23	J2	H12	20	23	J2	PF4	I/O	FT	-	FMC_A4, EVENTOUT	ADC3_IN14
-	-	15	K3	21	24	K3	H13	21	24	K3	PF5	I/O	FT	-	FMC_A5, EVENTOUT	ADC3_IN15
C2	10	16	G2	22	25	H6	J13	22	25	H6	VSS	S	-	-	-	-
D2	11	17	G3	23	26	H5	J12	23	26	H5	VDD	S	-	-	-	-
-	-	18	K2	24	27	K2	NC	24	27	K2	PF6	I/O	FT	-	TIM10_CH1, SPI5_NSS, SAI1_SD_B, UART7_RX, QUADSPI_BK1_IO3, EVENTOUT	ADC3_IN4
-	-	19	K1	25	28	K1	NC	25	28	K1	PF7	I/O	FT	-	TIM11_CH1, SPI5_SCK, SAI1_MCLK_B, UART7_TX, QUADSPI_BK1_IO2, EVENTOUT	ADC3_IN5
-	-	20	L3	26	29	L3	NC	26	29	L3	PF8	I/O	FT	-	SPI5_MISO, SAI1_SCK_B, UART7_RTS, TIM13_CH1, QUADSPI_BK1_IO0, EVENTOUT	ADC3_IN6
-	-	21	L2	27	30	L2	NC	27	30	L2	PF9	I/O	FT	-	SPI5_MOSI, SAI1_FS_B, UART7_CTS, TIM14_CH1, QUADSPI_BK1_IO1, EVENTOUT	ADC3_IN7
-	-	22	L1	28	31	L1	K11	28	31	L1	PF10	I/O	FT	-	QUADSPI_CLK, DCMI_D11, LCD_DE, EVENTOUT	ADC3_IN8
C1	12	23	G1	29	32	G1	K12	29	32	G1	PH0-OSC_IN	I/O	FT	(3)	EVENTOUT	OSC_IN

Table 11. STM32F777xx, STM32F778Ax and STM32F779xx pin and ball definitions (continued)

Pin Number											Pin name (function after reset	Pin type	I/O structure	Notes	Alternate functions	Additional functions
STM32F777xx							STM32F778Ax STM32F779xx									
TFBGA100	LQFP100	LQFP144	UFBGA176	LQFP176	LQFP208	TFBGA216	WLCSP180(1)	LQFP176	LQFP208	TFBGA216						
D1	13	24	H1	30	33	H1	K13	30	33	H1	PH1-OSC_OUT	I/O	FT	(3)	EVENTOUT	OSC_OUT
E1	14	25	J1	31	34	J1	L11	31	34	J1	NRST	I/O	RST	-	-	-
F1	15	26	M2	32	35	M2	L12	32	35	M2	PC0	I/O	FT	-	DFSDM1_CKIN0, DFSDM1_DATIN4, SAI2_FS_B, OTG_HS_ULPI_STP, FMC_SDNWE, LCD_R5, EVENTOUT	ADC1_IN10, ADC2_IN10, ADC3_IN10
F2	16	27	M3	33	36	M3	L13	33	36	M3	PC1	I/O	FT	-	TRACED0, DFSDM1_DATIN0, SPI2_MOSI/I2S2_SD, SAI1_SD_A, DFSDM1_CKIN4, ETH_MDC, MDIOS_MDC, EVENTOUT	ADC1_IN11, ADC2_IN11, ADC3_IN11, RTC_TAMP3/WKUP3
E2	17	28	M4	34	37	M4	NC	34	37	M4	PC2	I/O	FT	-	DFSDM1_CKIN1, SPI2_MISO, DFSDM1_CKOUT, OTG_HS_ULPI_DIR, ETH_MII_TXD2, FMC_SDNE0, EVENTOUT	ADC1_IN12, ADC2_IN12, ADC3_IN12
F3	18	29	M5	35	38	L4	NC	35	38	L4	PC3	I/O	FT	-	DFSDM1_DATIN1, SPI2_MOSI/I2S2_SD, OTG_HS_ULPI_NXT, ETH_MII_TX_CLK, FMC_SDCKE0, EVENTOUT	ADC1_IN13, ADC2_IN13, ADC3_IN13
-	-	30	-	36	39	J5	-	36	39	J5	VDD	S	-	-	-	-
-	-	-	-	-	-	J6	-	-	-	J6	VSS	S	-	-	-	-
G1	19	31	M1	37	40	M1	M11	37	40	M1	VSSA	S	-	-	-	-
-	-	-	N1	-	-	N1	-	-	-	N1	VREF-	S	-	-	-	-
-	20	32	P1	38	41	P1	-	38	41	P1	VREF+	S	-	-	-	-
H1	21	33	R1	39	42	R1	M12	39	42	R1	VDDA	S	-	-	-	-
G2	22	34	N3	40	43	N3	M13	40	43	N3	PA0-WKUP	I/O	FT	(4)	TIM2_CH1/TIM2_ETR, TIM5_CH1, TIM8_ETR, USART2_CTS, UART4_TX, SAI2_SD_B, ETH_MII_CRS, EVENTOUT	ADC1_IN0, ADC2_IN0, ADC3_IN0, WKUP1

Table 11. STM32F777xx, STM32F778Ax and STM32F779xx pin and ball definitions (continued)

Pin Number											Pin name (function after reset	Pin type	I/O structure	Notes	Alternate functions	Additional functions
STM32F777xx							STM32F778Ax STM32F779xx									
TFBGA100	LQFP100	LQFP144	UFBGA176	LQFP176	LQFP208	TFBGA216	WLCSP180(1)	LQFP176	LQFP208	TFBGA216						
H2	23	35	N2	41	44	N2	J11	41	44	N2	PA1	I/O	FT	-	TIM2_CH2, TIM5_CH2, USART2_RTS, UART4_RX, QUADSPI_BK1_IO3, SAI2_MCLK_B, ETH_MII_RX_CLK/ETH_RMII_REF_CLK, LCD_R2, EVENTOUT	ADC1_IN1, ADC2_IN1, ADC3_IN1
J2	24	36	P2	42	45	P2	J10	42	45	P2	PA2	I/O	FT	-	TIM2_CH3, TIM5_CH3, TIM9_CH1, USART2_TX, SAI2_SCK_B, ETH_MDIO, MDIOS_MDIO, LCD_R1, EVENTOUT	ADC1_IN2, ADC2_IN2, ADC3_IN2, WKUP2
-	-	-	F4	43	46	K4	L10	43	46	K4	PH2	I/O	FT	-	LPTIM1_IN2, QUADSPI_BK2_IO0, SAI2_SCK_B, ETH_MII_CRS, FMC_SDCKE0, LCD_R0, EVENTOUT	-
-	-	-	G4	44	47	J4	K10	44	47	J4	PH3	I/O	FT	-	QUADSPI_BK2_IO1, SAI2_MCLK_B, ETH_MII_COL, FMC_SDNE0, LCD_R1, EVENTOUT	-
-	-	-	H4	45	48	H4	N12	45	48	H4	PH4	I/O	FT	-	I2C2_SCL, LCD_G5, OTG_HS_ULPI_NXT,LCD_G4, EVENTOUT	-
-	-	-	J4	46	49	J3	N11	46	49	J3	PH5	I/O	FT	-	I2C2_SDA, SPI5_NSS, FMC_SDNWE, EVENTOUT	-
K2	25	37	R2	47	50	R2	M10	47	50	R2	PA3	I/O	FT	-	TIM2_CH4, TIM5_CH4, TIM9_CH2, USART2_RX, LCD_B2, OTG_HS_ULPI_D0, ETH_MII_COL, LCD_B5, EVENTOUT	ADC1_IN3, ADC2_IN3, ADC3_IN3
J1	26	38	-	-	51	K6	J9	-	51	K6	VSS	S	-	-	-	-
E6	-	-	L4	48	-	L5	-(5)	48	-	L5	BYPASS_REG	I	FT	-	-	-
K1	27	39	K4	49	52	K5	K9	49	52	K5	VDD	S	-	-	-	-
G3	28	40	N4	50	53	N4	L9	50	53	N4	PA4	I/O	TTa	-	SPI1_NSS/I2S1_WS, SPI3_NSS/I2S3_WS, USART2_CK, SPI6_NSS, OTG_HS_SOF, DCMI_HSYNC, LCD_VSYNC, EVENTOUT	ADC1_IN4, ADC2_IN4, DAC_OUT1

Table 11. STM32F777xx, STM32F778Ax and STM32F779xx pin and ball definitions (continued)

Pin Number											Pin name (function after reset	Pin type	I/O structure	Notes	Alternate functions	Additional functions
STM32F777xx							STM32F778Ax STM32F779xx									
TFBGA100	LQFP100	LQFP144	UFBGA176	LQFP176	LQFP208	TFBGA216	WLCSP180(1)	LQFP176	LQFP208	TFBGA216						
H3	29	41	P4	51	54	P4	P11	51	54	P4	PA5	I/O	TTa	-	TIM2_CH1/TIM2_ETR, TIM8_CH1N, SPI1_SCK/I2S1_CK, SPI6_SCK, OTG_HS_ULPI_CK, LCD_R4, EVENTOUT	ADC1_IN5, ADC2_IN5, DAC_OUT2
J3	30	42	P3	52	55	P3	N10	52	55	P3	PA6	I/O	FT	-	TIM1_BKIN, TIM3_CH1, TIM8_BKIN, SPI1_MISO, SPI6_MISO, TIM13_CH1, MDIOS_MDC, DCMI_PIXCLK, LCD_G2, EVENTOUT	ADC1_IN6, ADC2_IN6
K3	31	43	R3	53	56	R3	M9	53	56	R3	PA7	I/O	FT	-	TIM1_CH1N, TIM3_CH2, TIM8_CH1N, SPI1_MOSI/I2S1_SD, SPI6_MOSI, TIM14_CH1, ETH_MII_RX_DV/ETH_RMII_CRS_DV, FMC_SDNWE, EVENTOUT	ADC1_IN7, ADC2_IN7
G4	32	44	N5	54	57	N5	NC	54	57	N5	PC4	I/O	FT	-	DFSDM1_CKIN2, I2S1_MCK, SPDIF_RX2, ETH_MII_RXD0/ETH_RMII_RXD0, FMC_SDNE0, EVENTOUT	ADC1_IN14, ADC2_IN14
H4	33	45	P5	55	58	P5	NC	55	58	P5	PC5	I/O	FT	-	DFSDM1_DATIN2, SPDIF_RX3, ETH_MII_RXD1/ETH_RMII_RXD1, FMC_SDCKE0, EVENTOUT	ADC1_IN15, ADC2_IN15
-	-	-	-	-	59	L7	-	-	59	L7	VDD	S	-	-	-	-
-	-	-	-	-	60	L6	-	-	60	L6	VSS	S	-	-	-	-
J4	34	46	R5	56	61	R5	P10	56	61	R5	PB0	I/O	FT	-	TIM1_CH2N, TIM3_CH3, TIM8_CH2N, DFSDM1_CKOUT, UART4_CTS, LCD_R3, OTG_HS_ULPI_D1, ETH_MII_RXD2, LCD_G1, EVENTOUT	ADC1_IN8, ADC2_IN8
K4	35	47	R4	57	62	R4	J8	57	62	R4	PB1	I/O	FT	-	TIM1_CH3N, TIM3_CH4, TIM8_CH3N, DFSDM1_DATIN1, LCD_R6, OTG_HS_ULPI_D2, ETH_MII_RXD3, LCD_G0, EVENTOUT	ADC1_IN9, ADC2_IN9

Table 11. STM32F777xx, STM32F778Ax and STM32F779xx pin and ball definitions (continued)

Pin Number											Pin name (function after reset	Pin type	I/O structure	Notes	Alternate functions	Additional functions
STM32F777xx							STM32F778Ax STM32F779xx									
TFBGA100	LQFP100	LQFP144	UFBGA176	LQFP176	LQFP208	TFBGA216	WLCSP180(1)	LQFP176	LQFP208	TFBGA216						
G5	36	48	M6	58	63	M5	J7	58	63	M5	PB2	I/O	FT	-	SAI1_SD_A, SPI3_MOSI/I2S3_SD, QUADSPI_CLK, DFSDM1_CKIN1, EVENTOUT	-
-	-	-	-	-	64	G4	NC	-	64	G4	PI15	I/O	FT	-	LCD_G2, LCD_R0, EVENTOUT	-
-	-	-	-	-	65	R6	NC	-	65	R6	PJ0	I/O	FT	-	LCD_R7, LCD_R1, EVENTOUT	-
-	-	-	-	-	66	R7	NC	-	66	R7	PJ1	I/O	FT	-	LCD_R2, EVENTOUT	-
-	-	-	-	-	67	P7	NC	-	67	P7	PJ2	I/O	FT	-	DSI_TE, LCD_R3, EVENTOUT	-
-	-	-	-	-	68	N8	NC	-	68	N8	PJ3	I/O	FT	-	LCD_R4, EVENTOUT	-
-	-	-	-	-	69	M9	NC	-	69	M9	PJ4	I/O	FT	-	LCD_R5, EVENTOUT	-
-	-	49	R6	59	70	P8	N9	59	70	P8	PF11	I/O	FT	-	SPI5_MOSI, SAI2_SD_B, FMC_SDNRAS, DCMI_D12, EVENTOUT	-
-	-	50	P6	60	71	M6	K7	60	71	M6	PF12	I/O	FT	-	FMC_A6, EVENTOUT	-
-	-	51	M8	61	72	K7	P9	61	72	K7	VSS	S	-	-	-	-
-	-	52	N8	62	73	L8	M8	62	73	L8	VDD	S	-	-	-	-
-	-	53	N6	63	74	N6	L8	63	74	N6	PF13	I/O	FT	-	I2C4_SMBA, DFSDM1_DATIN6, FMC_A7, EVENTOUT	-
-	-	54	R7	64	75	P6	K8	64	75	P6	PF14	I/O	FT	-	I2C4_SCL, DFSDM1_CKIN6, FMC_A8, EVENTOUT	-
-	-	55	P7	65	76	M8	P8	65	76	M8	PF15	I/O	FT	-	I2C4_SDA, FMC_A9, EVENTOUT	-
-	-	56	N7	66	77	N7	N8	66	77	N7	PG0	I/O	FT	-	FMC_A10, EVENTOUT	-
-	-	57	M7	67	78	M7	L7	67	78	M7	PG1	I/O	FT	-	FMC_A11, EVENTOUT	-
H5	37	58	R8	68	79	R8	M7	68	79	R8	PE7	I/O	FT	-	TIM1_ETR, DFSDM1_DATIN2, UART7_RX, QUADSPI_BK2_IO0, FMC_D4, EVENTOUT	-
J5	38	59	P8	69	80	N9	N7	69	80	N9	PE8	I/O	FT	-	TIM1_CH1N, DFSDM1_CKIN2, UART7_TX, QUADSPI_BK2_IO1, FMC_D5, EVENTOUT	-

Table 11. STM32F777xx, STM32F778Ax and STM32F779xx pin and ball definitions (continued)

Pin Number											Pin name (function after reset	Pin type	I/O structure	Notes	Alternate functions	Additional functions
STM32F777xx							STM32F778Ax STM32F779xx									
TFBGA100	LQFP100	LQFP144	UFBGA176	LQFP176	LQFP208	TFBGA216	WLCSP180(1)	LQFP176	LQFP208	TFBGA216						
K5	39	60	P9	70	81	P9	P7	70	81	P9	PE9	I/O	FT	-	TIM1_CH1, DFSDM1_CKOUT, UART7_RTS, QUADSPI_BK2_IO2, FMC_D6, EVENTOUT	-
-	-	61	M9	71	82	K8	-	71	82	K8	VSS	S	-	-	-	-
-	-	62	N9	72	83	L9	-	72	83	L9	VDD	S	-	-	-	-
G6	40	63	R9	73	84	R9	J6	73	84	R9	PE10	I/O	FT	-	TIM1_CH2N, DFSDM1_DATIN4, UART7_CTS, QUADSPI_BK2_IO3, FMC_D7, EVENTOUT	-
H6	41	64	P10	74	85	P10	K6	74	85	P10	PE11	I/O	FT	-	TIM1_CH2, SPI4_NSS, DFSDM1_CKIN4, SAI2_SD_B, FMC_D8, LCD_G3, EVENTOUT	-
J6	42	65	R10	75	86	R10	L6	75	86	R10	PE12	I/O	FT	-	TIM1_CH3N, SPI4_SCK, DFSDM1_DATIN5, SAI2_SCK_B, FMC_D9, LCD_B4, EVENTOUT	-
K6	43	66	N11	76	87	R12	P6	76	87	R12	PE13	I/O	FT	-	TIM1_CH3, SPI4_MISO, DFSDM1_CKIN5, SAI2_FS_B, FMC_D10, LCD_DE, EVENTOUT	-
G7	44	67	P11	77	88	P11	N6	77	88	P11	PE14	I/O	FT	-	TIM1_CH4, SPI4_MOSI, SAI2_MCLK_B, FMC_D11, LCD_CLK, EVENTOUT	-
H7	45	68	R11	78	89	R11	M6	78	89	R11	PE15	I/O	FT	-	TIM1_BKIN, FMC_D12, LCD_R7, EVENTOUT	-
J7	46	69	R12	79	90	P12	K5	79	90	P12	PB10	I/O	FT	-	TIM2_CH3, I2C2_SCL, SPI2_SCK/I2S2_CK, DFSDM1_DATIN7, USART3_TX, QUADSPI_BK1_NCS, OTG_HS_ULPI_D3, ETH_MII_RX_ER, LCD_G4, EVENTOUT	-

Table 11. STM32F777xx, STM32F778Ax and STM32F779xx pin and ball definitions (continued)

Pin Number											Pin name (function after reset	Pin type	I/O structure	Notes	Alternate functions	Additional functions
STM32F777xx							STM32F778Ax STM32F779xx									
TFBGA100	LQFP100	LQFP144	UFBGA176	LQFP176	LQFP208	TFBGA216	WLCSP180(1)	LQFP176	LQFP208	TFBGA216						
K7	47	70	R13	80	91	R13	L5	80	91	R13	PB11	I/O	FT	-	TIM2_CH4, I2C2_SDA, DFSDM1_CKIN7, USART3_RX, OTG_HS_ULPI_D4, ETH_MII_TX_EN/ETH_RMII_TX_EN, DSI_TE, LCD_G5, EVENTOUT	-
F8	48	71	M10	81	92	L11	P5	81	92	L11	VCAP_1	S	-	-	-	-
-	49	-	-	-	93	K9	N5	-	93	K9	VSS	S	-	-	-	-
-	50	72	N10	82	94	L10	P4	82	94	L10	VDD	S	-	-	-	-
-	-	-	-	-	95	M14	NC	-	95	M14	PJ5	I/O	FT	-	LCD_R6, EVENTOUT	-
-	-	-	M11	83	96	P13	NC	83	96	P13	PH6	I/O	FT	-	I2C2_SMBA, SPI5_SCK, TIM12_CH1, ETH_MII_RXD2, FMC_SDNE1, DCMI_D8, EVENTOUT	-
-	-	-	N12	84	97	N13	NC	84	97	N13	PH7	I/O	FT	-	I2C3_SCL, SPI5_MISO, ETH_MII_RXD3, FMC_SDCKE1, DCMI_D9, EVENTOUT	-
-	-	-	M12	85	98	P14	M5	-	98	P14	PH8	I/O	FT	-	I2C3_SDA, FMC_D16, DCMI_HSYNC, LCD_R2, EVENTOUT	-
-	-	-	M13	86	99	N14	K4	-	99	N14	PH9	I/O	FT	-	I2C3_SMBA, TIM12_CH2, FMC_D17, DCMI_D0, LCD_R3, EVENTOUT	-
-	-	-	L13	87	100	P15	L4	-	100	P15	PH10	I/O	FT	-	TIM5_CH1, I2C4_SMBA, FMC_D18, DCMI_D1, LCD_R4, EVENTOUT	-
-	-	-	L12	88	101	N15	M4	-	101	N15	PH11	I/O	FT	-	TIM5_CH2, I2C4_SCL, FMC_D19, DCMI_D2, LCD_R5, EVENTOUT	-
-	-	-	K12	89	102	M15	P3	-	102	M15	PH12	I/O	FT	-	TIM5_CH3, I2C4_SDA, FMC_D20, DCMI_D3, LCD_R6, EVENTOUT	-
-	-	-	H12	90	-	K10	N4	-	-	K10	VSS	S	-	-	-	-
-	-	-	J12	91	103	K11	-	-	103	K11	VDD	S	-	-	-	-

Table 11. STM32F777xx, STM32F778Ax and STM32F779xx pin and ball definitions (continued)

Pin Number											Pin name (function after reset	Pin type	I/O structure	Notes	Alternate functions	Additional functions
STM32F777xx							STM32F778Ax STM32F779xx									
TFBGA100	LQFP100	LQFP144	UFBGA176	LQFP176	LQFP208	TFBGA216	WLCSP180(1)	LQFP176	LQFP208	TFBGA216						
K8	51	73	P12	92	104	L13	H8	85	104	L13	PB12	I/O	FT	-	TIM1_BKIN, I2C2_SMBA, SPI2_NSS/I2S2_WS, DFSDM1_DATIN1, USART3_CK, UART5_RX, CAN2_RX, OTG_HS_ULPI_D5, ETH_MII_TXD0/ETH_RMII_TXD0, OTG_HS_ID, EVENTOUT	-
J8	52	74	P13	93	105	K14	J5	86	105	K14	PB13	I/O	FT	-	TIM1_CH1N, SPI2_SCK/I2S2_CK, DFSDM1_CKIN1, USART3_CTS, UART5_TX, CAN2_TX, OTG_HS_ULPI_D6, ETH_MII_TXD1/ETH_RMII_TXD1, EVENTOUT	OTG_HS_VBUS
H10	53	75	R14	94	106	R14	N3	87	106	R14	PB14	I/O	FT	-	TIM1_CH2N, TIM8_CH2N, USART1_TX, SPI2_MISO, DFSDM1_DATIN2, USART3_RTS, UART4_RTS, TIM12_CH1, SDMMC2_D0, OTG_HS_DM, EVENTOUT	-
G10	54	76	R15	95	107	R15	N2	88	107	R15	PB15	I/O	FT	-	RTC_REFIN, TIM1_CH3N, TIM8_CH3N, USART1_RX, SPI2_MOSI/I2S2_SD, DFSDM1_CKIN2, UART4_CTS, TIM12_CH2, SDMMC2_D1, OTG_HS_DP, EVENTOUT	-
K9	55	77	P15	96	108	L15	M3	89	108	L15	PD8	I/O	FT	-	DFSDM1_CKIN3, USART3_TX, SPDIF_RX1, FMC_D13, EVENTOUT	-
J9	56	78	P14	97	109	L14	L3	90	109	L14	PD9	I/O	FT	-	DFSDM1_DATIN3, USART3_RX, FMC_D14, EVENTOUT	-
H9	57	79	N15	98	110	K15	M2	91	110	K15	PD10	I/O	FT	-	DFSDM1_CKOUT, USART3_CK, FMC_D15, LCD_B3, EVENTOUT	-
G9	58	80	N14	99	111	N10	K3	92	111	N10	PD11	I/O	FT	-	I2C4_SMBA, USART3_CTS, QUADSPI_BK1_IO0, SAI2_SD_A, FMC_A16/FMC_CLE, EVENTOUT	-

Table 11. STM32F777xx, STM32F778Ax and STM32F779xx pin and ball definitions (continued)

Pin Number											Pin name (function after reset	Pin type	I/O structure	Notes	Alternate functions	Additional functions
STM32F777xx							STM32F778Ax STM32F779xx									
TFBGA100	LQFP100	LQFP144	UFBGA176	LQFP176	LQFP208	TFBGA216	WLCSP180(1)	LQFP176	LQFP208	TFBGA216						
K10	59	81	N13	100	112	M10	J4	93	112	M10	PD12	I/O	FT	-	TIM4_CH1, LPTIM1_IN1, I2C4_SCL, USART3_RTS, QUADSPI_BK1_IO1, SAI2_FS_A, FMC_A17/FMC_ALE, EVENTOUT	-
J10	60	82	M15	101	113	M11	L2	94	113	M11	PD13	I/O	FT	-	TIM4_CH2, LPTIM1_OUT, I2C4_SDA, QUADSPI_BK1_IO3, SAI2_SCK_A, FMC_A18, EVENTOUT	-
-	-	83	-	102	114	J10	M1	95	114	J10	VSS	S	-	-	-	-
-	-	84	J13	103	115	J11	-	96	115	J11	VDD	S	-	-	-	-
H8	61	85	M14	104	116	L12	L1	97	116	L12	PD14	I/O	FT	-	TIM4_CH3, UART8_CTS, FMC_D0, EVENTOUT	-
G8	62	86	L14	105	117	K13	K2	98	117	K13	PD15	I/O	FT	-	TIM4_CH4, UART8_RTS, FMC_D1, EVENTOUT	-
-	-	-	-	-	118	K12	-	-	-	-	PJ6	I/O	FT	-	LCD_R7, EVENTOUT	-
-	-	-	-	-	119	J12	-	-	-	-	PJ7	I/O	FT	-	LCD_G0, EVENTOUT	-
-	-	-	-	-	120	H12	-	-	-	-	PJ8	I/O	FT	-	LCD_G1, EVENTOUT	-
-	-	-	-	-	121	J13	-	-	-	-	PJ9	I/O	FT	-	LCD_G2, EVENTOUT	-
-	-	-	-	-	122	H13	-	-	-	-	PJ10	I/O	FT	-	LCD_G3, EVENTOUT	-
-	-	-	-	-	123	G12	-	-	-	-	PJ11	I/O	FT	-	LCD_G4, EVENTOUT	-
-	-	-	-	-	124	H11	-	-	-	-	VDD	S	-	-	-	-
-	-	-	-	-	-	-	K1	99	118	H11	VDDDSI	S	-	-	-	-
-	-	-	-	-	125	H10	-	-	-	H10	VSS	S	-	-	-	-
-	-	-	-	-	-	-	H6	100	119	K12	VCAPDSI	S	-	-	-	-
-	-	-	-	-	-	-	J3	-	-	G13	VDD12DSI	S	-	-	-	-
-	-	-	-	-	-	-	J1	101	120	J12	DSI_D0P	I/O	-	-	-	-
-	-	-	-	-	-	-	J2	102	121	J13	DSI_D0N	I/O	-	-	-	-
-	-	-	-	-	-	-	H5	103	122	G12	VSSDSI	S	-	-	-	-
-	-	-	-	-	-	-	H4	104	123	H12	DSI_CKP	I/O	-	-	-	-

Table 11. STM32F777xx, STM32F778Ax and STM32F779xx pin and ball definitions (continued)

Pin Number											Pin name (function after reset	Pin type	I/O structure	Notes	Alternate functions	Additional functions
STM32F777xx							STM32F778Ax STM32F779xx									
TFBGA100	LQFP100	LQFP144	UFBGA176	LQFP176	LQFP208	TFBGA216	WLCSP180(1)	LQFP176	LQFP208	TFBGA216						
-	-	-	-	-	-	-	H3	105	124	H13	DSI_CKN	I/O	-	-	-	-
-	-	-	-	-	-	-	-	106	125	-	VDD12DSI	S	-	-	-	-
-	-	-	-	-	-	-	H1	107	126	F12	DSI_D1P	I/O	-	-	-	-
-	-	-	-	-	-	-	H2	108	127	F13	DSI_D1N	I/O	-	-	-	-
-	-	-	-	-	-	-	-	109	128	-	VSSDSI	S	-	-	-	-
-	-	-	-	-	126	G13	-	-	-	-	PK0	I/O	FT	-	LCD_G5, EVENTOUT	-
-	-	-	-	-	127	F12	-	-	-	-	PK1	I/O	FT	-	LCD_G6, EVENTOUT	-
-	-	-	-	-	128	F13	-	-	-	-	PK2	I/O	FT	-	LCD_G7, EVENTOUT	-
-	-	87	L15	106	129	M13	H9	110	129	M13	PG2	I/O	FT	-	FMC_A12, EVENTOUT	-
-	-	88	K15	107	130	M12	G9	111	130	M12	PG3	I/O	FT	-	FMC_A13, EVENTOUT	-
-	-	89	K14	108	131	N12	G1	112	131	N12	PG4	I/O	FT	-	FMC_A14/FMC_BA0, EVENTOUT	-
-	-	90	K13	109	132	N11	G2	113	132	N11	PG5	I/O	FT	-	FMC_A15/FMC_BA1, EVENTOUT	-
-	-	91	J15	110	133	J15	G3	114	133	J15	PG6	I/O	FT	-	FMC_NE3, DCMI_D12, LCD_R7, EVENTOUT	-
-	-	92	J14	111	134	J14	G4	115	134	J14	PG7	I/O	FT	-	SAI1_MCLK_A, USART6_CK, FMC_INT, DCMI_D13, LCD_CLK, EVENTOUT	-
-	-	93	H14	112	135	H14	G5	116	135	H14	PG8	I/O	FT	-	SPI6_NSS, SPDIF_RX2, USART6_RTS, ETH_PPS_OUT, FMC_SDCLK, LCD_G7, EVENTOUT	-
-	-	94	G12	113	136	G10	F1	117	136	G10	VSS	S	-	-	-	-
F6	-	95	H13	114	137	G11	F2	118	137	G11	VDDUSB	S	-	-	-	-
F10	63	96	H15	115	138	H15	G6	119	138	H15	PC6	I/O	FT	-	TIM3_CH1, TIM8_CH1, I2S2_MCK, DFSDM1_CKIN3, USART6_TX, FMC_NWAIT, SDMMC2_D6, SDMMC1_D6, DCMI_D0, LCD_HSYNC, EVENTOUT	-

Table 11. STM32F777xx, STM32F778Ax and STM32F779xx pin and ball definitions (continued)

Pin Number											Pin name (function after reset	Pin type	I/O structure	Notes	Alternate functions	Additional functions
STM32F777xx							STM32F778Ax STM32F779xx									
TFBGA100	LQFP100	LQFP144	UFBGA176	LQFP176	LQFP208	TFBGA216	WLCSP180(1)	LQFP176	LQFP208	TFBGA216						
E10	64	97	G15	116	139	G15	F3	120	139	G15	PC7	I/O	FT	-	TIM3_CH2, TIM8_CH2, I2S3_MCK, DFSDM1_DATIN3, USART6_RX, FMC_NE1, SDMMC2_D7, SDMMC1_D7, DCMI_D1, LCD_G6, EVENTOUT	-
F9	65	98	G14	117	140	G14	G8	121	140	G14	PC8	I/O	FT	-	TRACED1, TIM3_CH3, TIM8_CH3, UART5_RTS, USART6_CK, FMC_NE2/FMC_NCE, SDMMC1_D0, DCMI_D2, EVENTOUT	-
E9	66	99	F14	118	141	F14	E1	122	141	F14	PC9	I/O	FT	-	MCO2, TIM3_CH4, TIM8_CH4, I2C3_SDA, I2S_CKIN, UART5_CTS, QUADSPI_BK1_IO0, LCD_G3, SDMMC1_D1, DCMI_D3, LCD_B2, EVENTOUT	--
D9	67	100	F15	119	142	F15	E2	123	142	F15	PA8	I/O	FT	-	MCO1, TIM1_CH1, TIM8_BKIN2, I2C3_SCL, USART1_CK, OTG_FS_SOF, CAN3_RX, UART7_RX, LCD_B3, LCD_R6, EVENTOUT	-
C9	68	101	E15	120	143	E15	F4	124	143	E15	PA9	I/O	FT	-	TIM1_CH2, I2C3_SMBA, SPI2_SCK/I2S2_CK, USART1_TX, DCMI_D0, LCD_R5, EVENTOUT	OTG_FS_VBUS
D10	69	102	D15	121	144	D15	F5	125	144	D15	PA10	I/O	FT	-	TIM1_CH3, USART1_RX, LCD_B4, OTG_FS_ID, MDIOS_MDIO, DCMI_D1, LCD_B1, EVENTOUT	-
C10	70	103	C15	122	145	C15	E3	126	145	C15	PA11	I/O	FT	-	TIM1_CH4, SPI2_NSS/I2S2_WS, UART4_RX, USART1_CTS, CAN1_RX, OTG_FS_DM, LCD_R4, EVENTOUT	-
B10	71	104	B15	123	146	B15	D1	127	146	B15	PA12	I/O	FT	-	TIM1_ETR, SPI2_SCK/I2S2_CK, UART4_TX, USART1_RTS, SAI2_FS_B, CAN1_TX, OTG_FS_DP, LCD_R5, EVENTOUT	-

Table 11. STM32F777xx, STM32F778Ax and STM32F779xx pin and ball definitions (continued)

Pin Number											Pin name (function after reset	Pin type	I/O structure	Notes	Alternate functions	Additional functions
STM32F777xx							STM32F778Ax STM32F779xx									
TFBGA100	LQFP100	LQFP144	UFBGA176	LQFP176	LQFP208	TFBGA216	WLCSP180(1)	LQFP176	LQFP208	TFBGA216						
A10	72	105	A15	124	147	A15	D2	128	147	A15	PA13(JTMS-SWDIO)	I/O	FT	-	JTMS-SWDIO, EVENTOUT	-
E7	73	106	F13	125	148	E11	C1	129	148	E11	VCAP_2	S	-	-	-	-
E5	74	107	F12	126	149	F10	C2	130	149	F10	VSS	S	-	-	-	-
F5	75	108	G13	127	150	F11	B2	131	150	F11	VDD	S	-	-	-	-
-	-	-	E12	128	151	E12	F6	-	151	E12	PH13	I/O	FT	-	TIM8_CH1N, UART4_TX, CAN1_TX, FMC_D21, LCD_G2, EVENTOUT	-
-	-	-	E13	129	152	E13	F7	-	152	E13	PH14	I/O	FT	-	TIM8_CH2N, UART4_RX, CAN1_RX, FMC_D22, DCMI_D4, LCD_G3, EVENTOUT	-
-	-	-	D13	130	153	D13	E5	-	153	D13	PH15	I/O	FT	-	TIM8_CH3N, FMC_D23, DCMI_D11, LCD_G4, EVENTOUT	-
-	-	-	E14	131	154	E14	E4	132	154	E14	PI0	I/O	FT	-	TIM5_CH4, SPI2_NSS/I2S2_WS, FMC_D24, DCMI_D13, LCD_G5, EVENTOUT	-
-	-	-	D14	132	155	D14	B3	133	155	D14	PI1	I/O	FT	-	TIM8_BKIN2, SPI2_SCK/I2S2_CK, FMC_D25, DCMI_D8, LCD_G6, EVENTOUT	-
-	-	-	C14	133	156	C14	C3	-	156	C14	PI2	I/O	FT	-	TIM8_CH4, SPI2_MISO, FMC_D26, DCMI_D9, LCD_G7, EVENTOUT	-
-	-	-	C13	134	157	C13	D3	134	157	C13	PI3	I/O	FT	-	TIM8_ETR, SPI2_MOSI/I2S2_SD, FMC_D27, DCMI_D10, EVENTOUT	-
-	-	-	D9	135	-	F9	-	135	-	F9	VSS	S	-	-	-	-
-	-	-	C9	136	158	E10	-	136	158	E10	VDD	S	-	-	-	--
A9	76	109	A14	137	159	A14	A3	137	159	A14	PA14(JTCK-SWCLK)	I/O	FT	-	JTCK-SWCLK, EVENTOUT	-

Table 11. STM32F777xx, STM32F778Ax and STM32F779xx pin and ball definitions (continued)

Pin Number											Pin name (function after reset	Pin type	I/O structure	Notes	Alternate functions	Additional functions
STM32F777xx							STM32F778Ax STM32F779xx									
TFBGA100	LQFP100	LQFP144	UFBGA176	LQFP176	LQFP208	TFBGA216	WLCSP180(1)	LQFP176	LQFP208	TFBGA216						
A8	77	110	A13	138	160	A13	F8	138	160	A13	PA15(JTDI)	I/O	FT	-	JTDI, TIM2_CH1/TIM2_ETR, HDMI_CEC, SPI1_NSS/I2S1_WS, SPI3_NSS/I2S3_WS, SPI6_NSS, UART4_RTS, CAN3_TX, UART7_TX, EVENTOUT	-
B9	78	111	B14	139	161	B14	B4	139	161	B14	PC10	I/O	FT	-	DFSDM1_CKIN5, SPI3_SCK/I2S3_CK, USART3_TX, UART4_TX, QUADSPI_BK1_IO1, SDMMC1_D2, DCMI_D8, LCD_R2, EVENTOUT	-
B8	79	112	B13	140	162	B13	C4	140	162	B13	PC11	I/O	FT	-	DFSDM1_DATIN5, SPI3_MISO, USART3_RX, UART4_RX, QUADSPI_BK2_NCS, SDMMC1_D3, DCMI_D4, EVENTOUT	-
C8	80	113	A12	141	163	A12	D4	141	163	A12	PC12	I/O	FT	-	TRACED3, SPI3_MOSI/I2S3_SD, USART3_CK, UART5_TX, SDMMC1_CK, DCMI_D9, EVENTOUT	-
D8	81	114	B12	142	164	B12	A4	142	164	B12	PD0	I/O	FT	-	DFSDM1_CKIN6, DFSDM1_DATIN7, UART4_RX, CAN1_RX, FMC_D2, EVENTOUT	-
E8	82	115	C12	143	165	C12	D5	143	165	C12	PD1	I/O	FT	-	DFSDM1_DATIN6, DFSDM1_CKIN7, UART4_TX, CAN1_TX, FMC_D3, EVENTOUT	--
B7	83	116	D12	144	166	D12	D6	144	166	D12	PD2	I/O	FT	-	TRACED2, TIM3_ETR, UART5_RX, SDMMC1_CMD, DCMI_D11, EVENTOUT	-
C7	84	117	D11	145	167	C11	B5	145	167	C11	PD3	I/O	FT	-	DFSDM1_CKOUT, SPI2_SCK/I2S2_CK, DFSDM1_DATIN0, USART2_CTS, FMC_CLK, DCMI_D5, LCD_G7, EVENTOUT	-
D7	85	118	D10	146	168	D11	A5	146	168	D11	PD4	I/O	FT	-	DFSDM1_CKIN0, USART2_RTS, FMC_NOE, EVENTOUT	-

Table 11. STM32F777xx, STM32F778Ax and STM32F779xx pin and ball definitions (continued)

Pin Number											Pin name (function after reset	Pin type	I/O structure	Notes	Alternate functions	Additional functions
STM32F777xx							STM32F778Ax STM32F779xx									
TFBGA100	LQFP100	LQFP144	UFBGA176	LQFP176	LQFP208	TFBGA216	WLCSP180(1)	LQFP176	LQFP208	TFBGA216						
B6	86	119	C11	147	169	C10	C5	147	169	C10	PD5	I/O	FT	-	USART2_TX, FMC_NWE, EVENTOUT	-
-	-	120	D8	148	170	F8	B6	148	170	F8	VSS	S	-	-	-	-
-	-	121	C8	149	171	E9	A6	149	171	E9	VDDSDM MC	S	-	-	-	-
C6	87	122	B11	150	172	B11	E6	150	172	B11	PD6	I/O	FT	-	DFSDM1_CKIN4, SPI3_MOSI/I2S3_SD, SAI1_SD_A, USART2_RX, DFSDM1_DATIN1, SDMMC2_CK, FMC_NWAIT, DCMI_D10, LCD_B2, EVENTOUT	-
D6	88	123	A11	151	173	A11	E7	151	173	A11	PD7	I/O	FT	-	DFSDM1_DATIN4, SPI1_MOSI/I2S1_SD, DFSDM1_CKIN1, USART2_CK, SPDIF_RX0, SDMMC2_CMD, FMC_NE1, EVENTOUT	-
-	-	-	-	-	174	B10	NC	-	174	B10	PJ12	I/O	FT	-	LCD_G3, LCD_B0, EVENTOUT	-
-	-	-	-	-	175	B9	NC	-	175	B9	PJ13	I/O	FT	-	LCD_G4, LCD_B1, EVENTOUT	-
-	-	-	-	-	176	C9	NC	-	176	C9	PJ14	I/O	FT	-	LCD_B2, EVENTOUT	-
-	-	-	-	-	177	D10	-	-	177	D10	PJ15	I/O	FT	-	LCD_B3, EVENTOUT	-
-	-	124	C10	152	178	D9	C6	152	178	D9	PG9	I/O	FT	-	SPI1_MISO, SPDIF_RX3, USART6_RX, QUADSPI_BK2_IO2, SAI2_FS_B, SDMMC2_D0, FMC_NE2/FMC_NCE, DCMI_VSYNC, EVENTOUT	-
-	-	125	B10	153	179	C8	A7	153	179	C8	PG10	I/O	FT	-	SPI1_NSS/I2S1_WS, LCD_G3, SAI2_SD_B, SDMMC2_D1, FMC_NE3, DCMI_D2, LCD_B2, EVENTOUT	-
-	-	126	B9	154	180	B8	B7	154	180	B8	PG11	I/O	FT	-	SPI1_SCK/I2S1_CK, SPDIF_RX0, SDMMC2_D2, ETH_MII_TX_EN/ETH_RMII_TX_EN, DCMI_D3, LCD_B3, EVENTOUT	-

Table 11. STM32F777xx, STM32F778Ax and STM32F779xx pin and ball definitions (continued)

Pin Number											Pin name (function after reset	Pin type	I/O structure	Notes	Alternate functions	Additional functions
STM32F777xx							STM32F778Ax STM32F779xx									
TFBGA100	LQFP100	LQFP144	UFBGA176	LQFP176	LQFP208	TFBGA216	WLCSP180(1)	LQFP176	LQFP208	TFBGA216						
-	-	127	B8	155	181	C7	D7	155	181	C7	PG12	I/O	FT	-	LPTIM1_IN1, SPI6_MISO, SPDIF_RX1, USART6_RTS, LCD_B4, SDMMC2_D3, FMC_NE4, LCD_B1, EVENTOUT	-
-	-	128	A8	156	182	B3	C7	156	182	B3	PG13	I/O	FT	-	TRACED0, LPTIM1_OUT, SPI6_SCK, USART6_CTS, ETH_MII_TXD0/ETH_RMII_TXD0, FMC_A24, LCD_R0, EVENTOUT	-
-	-	129	A7	157	183	A4	NC	157	183	A4	PG14	I/O	FT	-	TRACED1, LPTIM1_ETR, SPI6_MOSI, USART6_TX, QUADSPI_BK2_IO3, ETH_MII_TXD1/ETH_RMII_TXD1, FMC_A25, LCD_B0, EVENTOUT	-
-	-	130	D7	158	184	F7	A8	158	184	F7	VSS	S	-	-	-	-
-	-	131	C7	159	185	E8	B8	159	185	E8	VDD	S	-	-	-	-
-	-	-	-	-	186	D8	NC	-	186	D8	PK3	I/O	FT	-	LCD_B4, EVENTOUT	-
-	-	-	-	-	187	D7	NC	-	187	D7	PK4	I/O	FT	-	LCD_B5, EVENTOUT	-
-	-	-	-	-	188	C6	NC	-	188	C6	PK5	I/O	FT	-	LCD_B6, EVENTOUT	-
-	-	-	-	-	189	C5	NC	-	189	C5	PK6	I/O	FT	-	LCD_B7, EVENTOUT	-
-	-	-	-	-	190	C4	NC	-	190	C4	PK7	I/O	FT	-	LCD_DE, EVENTOUT	-
-	-	132	B7	160	191	B7	F9	160	191	B7	PG15	I/O	FT	-	USART6_CTS, FMC_SDNCAS, DCMI_D13, EVENTOUT	-
A7	89	133	A10	161	192	A10	E8	161	192	A10	PB3 (JTDO/ TRACESWO)	I/O	FT	-	JTDO/TRACESWO, TIM2_CH2, SPI1_SCK/I2S1_CK, SPI3_SCK/I2S3_CK, SPI6_SCK, SDMMC2_D2, CAN3_RX, UART7_RX, EVENTOUT	-
A6	90	134	A9	162	193	A9	D8	162	193	A9	PB4(NJTRST)	I/O	FT	-	NJTRST, TIM3_CH1, SPI1_MISO, SPI3_MISO, SPI2_NSS/I2S2_WS, SPI6_MISO, SDMMC2_D3, CAN3_TX, UART7_TX, EVENTOUT	-

Table 11. STM32F777xx, STM32F778Ax and STM32F779xx pin and ball definitions (continued)

Pin Number											Pin name (function after reset	Pin type	I/O structure	Notes	Alternate functions	Additional functions
STM32F777xx							STM32F778Ax STM32F779xx									
TFBGA100	LQFP100	LQFP144	UFBGA176	LQFP176	LQFP208	TFBGA216	WLCSP180(1)	LQFP176	LQFP208	TFBGA216						
C5	91	135	A6	163	194	A8	A9	163	194	A8	PB5	I/O	FT	-	UART5_RX, TIM3_CH2, I2C1_SMBA, SPI1_MOSI/I2S1_SD, SPI3_MOSI/I2S3_SD, SPI6_MOSI, CAN2_RX, OTG_HS_ULPI_D7, ETH_PPS_OUT, FMC_SDCKE1, DCMI_D10, LCD_G7, EVENTOUT	-
B5	92	136	B6	164	195	B6	B9	164	195	B6	PB6	I/O	FT	-	UART5_TX, TIM4_CH1, HDMI_CEC, I2C1_SCL, DFSDM1_DATIN5, USART1_TX, CAN2_TX, QUADSPI_BK1_NCS, I2C4_SCL, FMC_SDNE1, DCMI_D5, EVENTOUT	-
A5	93	137	B5	165	196	B5	C8	165	196	B5	PB7	I/O	FT	-	TIM4_CH2, I2C1_SDA, DFSDM1_CKIN5, USART1_RX, I2C4_SDA, FMC_NL, DCMI_VSYNC, EVENTOUT	-
D5	94	138	D6	166	197	E6	A10	166	197	E6	BOOT0	I	B	-	-	VPP
B4	95	139	A5	167	198	A7	E9	167	198	A7	PB8	I/O	FT	-	I2C4_SCL, TIM4_CH3, TIM10_CH1, I2C1_SCL, DFSDM1_CKIN7, UART5_RX, CAN1_RX, SDMMC2_D4, ETH_MII_TXD3, SDMMC1_D4, DCMI_D6, LCD_B6, EVENTOUT	-
A4	96	140	B4	168	199	B4	D9	168	199	B4	PB9	I/O	FT	-	I2C4_SDA, TIM4_CH4, TIM11_CH1, I2C1_SDA, SPI2_NSS/I2S2_WS, DFSDM1_DATIN7, UART5_TX, CAN1_TX, SDMMC2_D5, I2C4_SMBA, SDMMC1_D5, DCMI_D7, LCD_B7, EVENTOUT	-
D4	97	141	A4	169	200	A6	C9	169	200	A6	PE0	I/O	FT	-	TIM4_ETR, LPTIM1_ETR, UART8_RX, SAI2_MCLK_A, FMC_NBL0, DCMI_D2, EVENTOUT	-
C4	98	142	A3	170	201	A5	B10	170	201	A5	PE1	I/O	FT	-	LPTIM1_IN2, UART8_TX, FMC_NBL1, DCMI_D3, EVENTOUT	-

Table 11. STM32F777xx, STM32F778Ax and STM32F779xx pin and ball definitions (continued)

Pin Number											Pin name (function after reset	Pin type	I/O structure	Notes	Alternate functions	Additional functions
STM32F777xx							STM32F778Ax STM32F779xx									
TFBGA100	LQFP100	LQFP144	UFBGA176	LQFP176	LQFP208	TFBGA216	WLCSP180(1)	LQFP176	LQFP208	TFBGA216						
E4	99	-	D5	-	202	F6	A11	-	202	F6	VSS	S	-	-	-	-
F7	-	143	C6	171	203	E5	C10	171	203	E5	PDR_ON	S	-	-	-	-
F4	100	144	C5	172	204	E7	B11	172	204	E7	VDD	S	-	-	-	-
-	-	-	D4	173	205	C3	D10	173	205	C3	PI4	I/O	FT	-	TIM8_BKIN, SAI2_MCLK_A, FMC_NBL2, DCMI_D5, LCD_B4, EVENTOUT	-
-	-	-	C4	174	206	D3	D11	174	206	D3	PI5	I/O	FT	-	TIM8_CH1, SAI2_SCK_A, FMC_NBL3, DCMI_VSYNC, LCD_B5, EVENTOUT	-
-	-	-	C3	175	207	D6	C11	175	207	D6	PI6	I/O	FT	-	TIM8_CH2, SAI2_SD_A, FMC_D28, DCMI_D6, LCD_B6, EVENTOUT	-
-	-	-	C2	176	208	D4	B12	176	208	D4	PI7	I/O	FT	-	TIM8_CH3, SAI2_FS_A, FMC_D29, DCMI_D7, LCD_B7, EVENTOUT	-
-	-	-	F6	-	-	-	-	-	-	-	VSS	S	-	-	-	-
-	-	-	F7	-	-	-	-	-	-	-	VSS	S	-	-	-	-
-	-	-	F8	-	-	-	-	-	-	-	VSS	S	-	-	-	-
-	-	-	F9	-	-	-	-	-	-	-	VSS	S	-	-	-	-
-	-	-	F10	-	-	-	-	-	-	-	VSS	S	-	-	-	-
-	-	-	G6	-	-	-	-	-	-	-	VSS	S	-	-	-	-
-	-	-	G7	-	-	-	-	-	-	-	VSS	S	-	-	-	-
-	-	-	G8	-	-	-	-	-	-	-	VSS	S	-	-	-	-
-	-	-	G9	-	-	-	-	-	-	-	VSS	S	-	-	-	-
-	-	-	G10	-	-	-	-	-	-	-	VSS	S	-	-	-	-
-	-	-	H6	-	-	-	-	-	-	-	VSS	S	-	-	-	-
-	-	-	H7	-	-	-	-	-	-	-	VSS	S	-	-	-	-
-	-	-	H8	-	-	-	-	-	-	-	VSS	S	-	-	-	-
-	-	-	H9	-	-	-	-	-	-	-	VSS	S	-	-	-	-
-	-	-	H10	-	-	-	-	-	-	-	VSS	S	-	-	-	-
-	-	-	J6	-	-	-	-	-	-	-	VSS	S	-	-	-	-

Table 11. STM32F777xx, STM32F778Ax and STM32F779xx pin and ball definitions (continued)

Pin Number											Pin name (function after reset	Pin type	I/O structure	Notes	Alternate functions	Additional functions
STM32F777xx							STM32F778Ax STM32F779xx									
TFBGA100	LQFP100	LQFP144	UFBGA176	LQFP176	LQFP208	TFBGA216	WLCSP180(1)	LQFP176	LQFP208	TFBGA216						
-	-	-	J7	-	-	-	-	-	-	-	VSS	S	-	-	-	-
-	-	-	J8	-	-	-	-	-	-	-	VSS	S	-	-	-	-
-	-	-	J9	-	-	-	-	-	-	-	VSS	S	-	-	-	-
-	-	-	J10	-	-	-	-	-	-	-	VSS	S	-	-	-	-
-	-	-	K6	-	-	-	-	-	-	-	VSS	S	-	-	-	-
-	-	-	K7	-	-	-	-	-	-	-	VSS	S	-	-	-	-
-	-	-	K8	-	-	-	-	-	-	-	VSS	S	-	-	-	-
-	-	-	K9	-	-	-	-	-	-	-	VSS	S	-	-	-	-
-	-	-	K10	-	-	-	-	-	-	-	VSS	S	-	-	-	-

1. NC (not-connected) pins are not bonded. They must be configured by software to output push-pull and forced to 0 in the output data register to avoid an extra current consumption in low-power modes. list of pins: PI8, PI12, PI13, PI14, PF6, PF7, PF8, PF9, PC2, PC3, PC4, PC5, PI15, PJ0, PJ1, PJ2, PJ3, PJ4, PJ5, PH6, PH7, PJ12, PJ13, PJ14, PJ15, PG14, PK3, PK4, PK5, PK6 and PK7.

2. PC13, PC14, PC15 and PI8 are supplied through the power switch. Since the switch only sinks a limited amount of current (3 mA), the use of GPIOs PC13 to PC15 and PI8 in output mode is limited: - The speed should not exceed 2 MHz with a maximum load of 30 pF. - These I/Os must not be used as a current source (e.g. to drive an LED).

3. FT = 5 V tolerant except when in analog mode or oscillator mode (for PC14, PC15, PH0 and PH1).

4. If the device is in regulator OFF/internal reset ON mode (BYPASS_REG pin is set to VDD), then PA0 is used as an internal reset (active low).

5. Internally connected to VDD or VSS depending on part number.

Table 12. FMC pin definition

Pin name	NOR/PSRAM/SRAM	NOR/PSRAM Mux	NAND16	SDRAM
PF0	A0	-	-	A0
PF1	A1	-	-	A1
PF2	A2	-	-	A2
PF3	A3	-	-	A3
PF4	A4	-	-	A4
PF5	A5	-	-	A5
PF12	A6	-	-	A6
PF13	A7	-	-	A7
PF14	A8	-	-	A8
PF15	A9	-	-	A9
PG0	A10	-	-	A10
PG1	A11	-	-	A11
PG2	A12	-	-	A12
PG3	A13	-	-	-
PG4	A14	-	-	BA0
PG5	A15	-	-	BA1
PD11	A16	A16	CLE	-
PD12	A17	A17	ALE	-
PD13	A18	A18	-	-
PE3	A19	A19	-	-
PE4	A20	A20	-	-
PE5	A21	A21	-	-
PE6	A22	A22	-	-
PE2	A23	A23	-	-
PG13	A24	A24	-	-
PG14	A25	A25	-	-
PD14	D0	DA0	D0	D0
PD15	D1	DA1	D1	D1
PD0	D2	DA2	D2	D2
PD1	D3	DA3	D3	D3
PE7	D4	DA4	D4	D4
PE8	D5	DA5	D5	D5
PE9	D6	DA6	D6	D6
PE10	D7	DA7	D7	D7

Table 12. FMC pin definition (continued)

Pin name	NOR/PSRAM/SRAM	NOR/PSRAM Mux	NAND16	SDRAM
PE11	D8	DA8	D8	D8
PE12	D9	DA9	D9	D9
PE13	D10	DA10	D10	D10
PE14	D11	DA11	D11	D11
PE15	D12	DA12	D12	D12
PD8	D13	DA13	D13	D13
PD9	D14	DA14	D14	D14
PD10	D15	DA15	D15	D15
PH8	D16	-	-	D16
PH9	D17	-	-	D17
PH10	D18	-	-	D18
PH11	D19	-	-	D19
PH12	D20	-	-	D20
PH13	D21	-	-	D21
PH14	D22	-	-	D22
PH15	D23	-	-	D23
PI0	D24	-	-	D24
PI1	D25	-	-	D25
PI2	D26	-	-	D26
PI3	D27	-	-	D27
PI6	D28	-	-	D28
PI7	D29	-	-	D29
PI9	D30	-	-	D30
PI10	D31	-	-	D31
PD7	NE1	NE1	-	-
PG6	NE3	-	-	-
PG9	NE2	NE2	NCE	-
PG10	NE3	NE3	-	-
PG11	-	-	-	-
PG12	NE4	NE4	-	-
PD3	CLK	CLK	-	-
PD4	NOE	NOE	NOE	-
PD5	NWE	NWE	NWE	-
PD6	NWAIT	NWAIT	NWAIT	-

Table 12. FMC pin definition (continued)

Pin name	NOR/PSRAM/SRAM	NOR/PSRAM Mux	NAND16	SDRAM
PB7	NADV	NADV	-	-
PF6	-	-	-	-
PF7	-	-	-	-
PF8	-	-	-	-
PF9	-	-	-	-
PF10	-	-	-	-
PG6	-	-	-	-
PG7	-	-	INT	-
PE0	NBL0	NBL0	-	NBL0
PE1	NBL1	NBL1	-	NBL1
PI4	NBL2	-	-	NBL2
PI5	NBL3	-	-	NBL3
PG8	-	-	-	SDCLK
PC0	-	-	-	SDNWE
PF11	-	-	-	SDNRAS
PG15	-	-	-	SDNCAS
PH2	-	-	-	SDCKE0
PH3	-	-	-	SDNE0
PH6	-	-	-	SDNE1
PH7	-	-	-	SDCKE1
PH5	-	-	-	SDNWE
PC2	-	-	-	SDNE0
PC3	-	-	-	SDCKE0
PC6	NWAIT	NWAIT	NWAIT	-
PB5	-	-	-	SDCKE1
PB6	-	-	-	SDNE1

Table 13. STM32F777xx, STM32F778Ax and STM32F779xx alternate function mapping

Port		AF0	AF1	AF2	AF3	AF4	AF5	AF6	AF7	AF8	AF9	AF10	AF11	AF12	AF13	AF14	AF15
		SYS	I2C4/UART5/TIM1/2	TIM3/4/5	TIM8/9/10/11/LPTIM1/DFSDM1/CEC	I2C1/2/3/4/USART1/CEC	SPI1/I2S1/SPI2/I2S2/SPI3/I2S3/SPI4/5/6	SPI2/I2S2/SPI3/I2S3/SAI1/I2C4/UART4/DFSDM1	SPI2/I2S2/SPI3/I2S3/SPI6/USART1/2/3/UART5/DFSDM1/SPDIF	SPI6/SAI2/USART6/UART4/5/7/8/OTG_FS/SPDIF	CAN1/2/TIM12/13/14/QUADSPI/FMC/LCD	SAI2/QUADSPI/SDMMC2/DFSDM1/OTG2_HS/OTG1_FS/LCD	I2C4/CAN3/SDMMC2/ETH	UART7/FMC/SDMMC1/MDIOS/OTG2_FS	DCMI/LCD/DSI	LCD	SYS
Port A	PA0	-	TIM2_CH1/TIM2_ETR	TIM5_CH1	TIM8_ETR	-	-	-	USART2_CTS	UART4_TX	-	SAI2_SD_B	ETH_MII_CRS	-	-	-	EVENTOUT
	PA1	-	TIM2_CH2	TIM5_CH2	-	-	-	-	USART2_RTS	UART4_RX	QUADSPI_BK1_IO3	SAI2_MCK_B	ETH_MII_RX_CLK/ETH_RMII_REF_CLK	-	-	LCD_R2	EVENTOUT
	PA2	-	TIM2_CH3	TIM5_CH3	TIM9_CH1	-	-	-	USART2_TX	SAI2_SCK_B	-	-	ETH_MDIO	MDIOS_MDIO	-	LCD_R1	EVENTOUT
	PA3	-	TIM2_CH4	TIM5_CH4	TIM9_CH2	-	-	-	USART2_RX	-	LCD_B2	OTG_HS_ULPI_D0	ETH_MII_COL	-	-	LCD_B5	EVENTOUT
	PA4	-	-	-	-	-	SPI1_NSS/I2S1_WS	SPI3_NSS/I2S3_WS	USART2_CK	SPI6_NSS	-	-	-	OTG_HS_SOF	DCMI_HSYNC	LCD_VSYNC	EVENTOUT
	PA5	-	TIM2_CH1/TIM2_ETR	-	TIM8_CH1N	-	SPI1_SCK/I2S1_CK	-	-	SPI6_SCK	-	OTG_HS_ULPI_CK	-	-	-	LCD_R4	EVENTOUT
	PA6	-	TIM1_BKIN	TIM3_CH1	TIM8_BKIN	-	SPI1_MISO	-	-	SPI6_MISO	TIM13_CH1	-	-	MDIOS_MDC	DCMI_PIXCLK	LCD_G2	EVENTOUT
	PA7	-	TIM1_CH1N	TIM3_CH2	TIM8_CH1N	-	SPI1_MOSI/I2S1_SD	-	-	SPI6_MOSI	TIM14_CH1	-	ETH_MII_RX_DV/ETH_RMII_CRS_DV	FMC_SDNWE	-	-	EVENTOUT
	PA8	MCO1	TIM1_CH1	-	TIM8_BKIN2	I2C3_SCL	-	-	USART1_CK	-	-	OTG_FS_SOF	CAN3_RX	UART7_RX	LCD_B3	LCD_R6	EVENTOUT
	PA9	-	TIM1_CH2	-	-	I2C3_SMBA	SPI2_SCK/I2S2_CK	-	USART1_TX	-	-	-	-	-	DCMI_D0	LCD_R5	EVENTOUT
	PA10	-	TIM1_CH3	-	-	-	-	-	USART1_RX	-	LCD_B4	OTG_FS_ID	-	MDIOS_MDIO	DCMI_D1	LCD_B1	EVENTOUT

Table 13. STM32F777xx, STM32F778Ax and STM32F779xx alternate function mapping (continued)

Port		AF0	AF1	AF2	AF3	AF4	AF5	AF6	AF7	AF8	AF9	AF10	AF11	AF12	AF13	AF14	AF15
		SYS	I2C4/UART5/TIM1/2	TIM3/4/5	TIM8/9/10/11/LPTIM1/DFSDM1/CEC	I2C1/2/3/4/USART1/CEC	SPI1/I2S1/SPI2/I2S2/SPI3/I2S3/SPI4/5/6	SPI2/I2S2/SPI3/I2S3/SAI1/I2C4/UART4/DFSDM1	SPI2/I2S2/SPI3/I2S3/SPI6/USART1/2/3/UART5/DFSDM1/SPDIF	SPI6/SAI2/USART6/UART4/5/7/8/OTG_FS/SPDIF	CAN1/2/TIM12/13/14/QUADSPI/FMC/LCD	SAI2/QUADSPI/SDMMC2/DFSDM1/OTG2_HS/OTG1_FS/LCD	I2C4/CAN3/SDMMC2/ETH	UART7/FMC/SDMMC1/MDIOS/OTG2_FS	DCMI/LCD/DSI	LCD	SYS
Port A	PA11	-	TIM1_CH4	-	-	-	SPI2_NSS/I2S2_WS	UART4_RX	USART1_CTS	-	CAN1_RX	OTG_FS_DM	-	-	-	LCD_R4	EVENTOUT
	PA12	-	TIM1_ETR	-	-	-	SPI2_SCK/I2S2_CK	UART4_TX	USART1_RTS	SAI2_FS_B	CAN1_TX	OTG_FS_DP	-	-	-	LCD_R5	EVENTOUT
	PA13	JTMS-SWDIO	-	-	-	-	-	-	-	-	-	-	-	-	-	-	EVENTOUT
	PA14	JTCK-SWCLK	-	-	-	-	-	-	-	-	-	-	-	-	-	-	EVENTOUT
	PA15	JTDI	TIM2_CH1/TIM2_ETR	-	-	HDMI-CEC	SPI1_NSS/I2S1_WS	SPI3_NSS/I2S3_WS	SPI6_NSS	UART4_RTS	-	-	CAN3_TX	UART7_TX	-	-	EVENTOUT
Port B	PB0	-	TIM1_CH2N	TIM3_CH3	TIM8_CH2N	-	-	DFSDM1_CKOUT	-	UART4_CTS	LCD_R3	OTG_HS_ULPI_D1	ETH_MII_RXD2	-	-	LCD_G1	EVENTOUT
	PB1	-	TIM1_CH3N	TIM3_CH4	TIM8_CH3N	-	-	DFSDM1_DATIN1	-	-	LCD_R6	OTG_HS_ULPI_D2	ETH_MII_RXD3	-	-	LCD_G0	EVENTOUT
	PB2	-	-	-	-	-	-	SAI1_SD_A	SPI3_MOSI/I2S3_SD	-	QUADSPI_CLK	DFSDM1_CKIN1	-	-	-	-	EVENTOUT
	PB3	JTDO/TRACESWO	TIM2_CH2	-	-	-	SPI1_SCK/I2S1_CK	SPI3_SCK/I2S3_CK	-	SPI6_SCK	-	SDMMC2_D2	CAN3_RX	UART7_RX	-	-	EVENTOUT
	PB4	NJTRST	-	TIM3_CH1	-	-	SPI1_MISO	SPI3_MISO	SPI2_NSS/I2S2_WS	SPI6_MISO	-	SDMMC2_D3	CAN3_TX	UART7_TX	-	-	EVENTOUT
	PB5	-	UART5_RX	TIM3_CH2	-	I2C1_SMBA	SPI1_MOSI/I2S1_SD	SPI3_MOSI/I2S3_SD	-	SPI6_MOSI	CAN2_RX	OTG_HS_ULPI_D7	ETH_PPS_OUT	FMC_SDCKE1	DCMI_D10	LCD_G7	EVENTOUT
	PB6	-	UART5_TX	TIM4_CH1	HDMI-CEC	I2C1_SCL	-	DFSDM1_DATIN5	USART1_TX	-	CAN2_TX	QUADSPI_BK1_NCS	I2C4_SCL	FMC_SDNE1	DCMI_D5	-	EVENTOUT

Table 13. STM32F777xx, STM32F778Ax and STM32F779xx alternate function mapping (continued)

Port		AF0	AF1	AF2	AF3	AF4	AF5	AF6	AF7	AF8	AF9	AF10	AF11	AF12	AF13	AF14	AF15
		SYS	I2C4/UART5/TIM1/2	TIM3/4/5	TIM8/9/10/11/LPTIM1/DFSDM1/CEC	I2C1/2/3/4/USART1/CEC	SPI1/I2S1/SPI2/I2S2/SPI3/I2S3/SPI4/5/6	SPI2/I2S2/SPI3/I2S3/SAI1/I2C4/UART4/DFSDM1	SPI2/I2S2/SPI3/I2S3/SPI6/USART1/2/3/UART5/DFSDM1/SPDIF	SPI6/SAI2/USART6/UART4/5/7/8/OTG_FS/SPDIF	CAN1/2/TIM12/13/14/QUADSPI/FMC/LCD	SAI2/QUADSPI/SDMMC2/DFSDM1/OTG2_HS/OTG1_FS/LCD	I2C4/CAN3/SDMMC2/ETH	UART7/FMC/SDMMC1/MDIOS/OTG2_FS	DCMI/LCD/DSI	LCD	SYS
Port B	PB7	-	-	TIM4_CH2	-	I2C1_SDA	-	DFSDM1_CKIN5	USART1_RX	-	-	-	I2S4_SDA	FMC_NL	DCMI_VSYNC	-	EVENTOUT
	PB8	-	I2C4_SCL	TIM4_CH3	TIM10_CH1	I2C1_SCL	-	DFSDM1_CKIN7	UART5_RX	-	CAN1_RX	SDMMC2_D4	ETH_MII_TXD3	SDMMC_D4	DCMI_D6	LCD_B6	EVENTOUT
	PB9	-	I2C4_SDA	TIM4_CH4	TIM11_CH1	I2C1_SDA	SPI2_NSS/I2S2_WS	DFSDM1_DATIN7	UART5_TX	-	CAN1_TX	SDMMC2_D5	I2C4_SMBA	SDMMC_D5	DCMI_D7	LCD_B7	EVENTOUT
	PB10	-	TIM2_CH3	-	-	I2C2_SCL	SPI2_SCK/I2S2_CK	DFSDM1_DATIN7	USART3_TX	-	- QUADSPI_BK1_NCS	OTG_HS_ULPI_D3	ETH_MII_RX_ER	-	-	LCD_G4	EVENTOUT
	PB11	-	TIM2_CH4	-	-	I2C2_SDA	-	DFSDM1_CKIN7	USART3_RX	-	-	OTG_HS_ULPI_D4	ETH_MII_TX_EN/ETH_RMII_TX_EN	-	DSI_TE	LCD_G5	EVENTOUT
	PB12	-	TIM1_BKIN	-	-	I2C2_SMBA	SPI2_NSS/I2S2_WS	DFSDM1_DATIN1	USART3_CK	UART5_RX	CAN2_RX	OTG_HS_ULPI_D5	ETH_MII_TXD0/ETH_RMII_TXD0	OTG_HS_ID	-	-	EVENTOUT
	PB13	-	TIM1_CH1N	-	-	-	SPI2_SCK/I2S2_CK	DFSDM1_CKIN1	USART3_CTS	UART5_TX	CAN2_TX	OTG_HS_ULPI_D6	ETH_MII_TXD1/ETH_RMII_TXD1	-	-	-	EVENTOUT
	PB14	-	TIM1_CH2N	-	TIM8_CH2N	USART1_TX	SPI2_MISO	DFSDM1_DATIN2	USART3_RTS	UART4_RTS	TIM12_CH1	SDMMC2_D0	-	OTG_HS_DM	-	-	EVENTOUT
	PB15	RTC_REFIN	TIM1_CH3N	-	TIM8_CH3N	USART1_RX	SPI2_MOSI/I2S2_SD	DFSDM1_CKIN2	-	UART4_CTS	TIM12_CH2	SDMMC2_D1	-	OTG_HS_DP	-	-	EVENTOUT

Table 13. STM32F777xx, STM32F778Ax and STM32F779xx alternate function mapping (continued)

Port		AF0	AF1	AF2	AF3	AF4	AF5	AF6	AF7	AF8	AF9	AF10	AF11	AF12	AF13	AF14	AF15
		SYS	I2C4/UART5/TIM1/2	TIM3/4/5	TIM8/9/10/11/LPTIM1/DFSDM1/CEC	I2C1/2/3/4/USART1/CEC	SPI1/I2S1/SPI2/I2S2/SPI3/I2S3/SPI4/5/6	SPI2/I2S2/SPI3/I2S3/SAI1/I2C4/UART4/DFSDM1	SPI2/I2S2/SPI3/I2S3/SPI6/USART1/2/3/UART5/DFSDM1/SPDIF	SPI6/SAI2/USART6/UART4/5/7/8/OTG_FS/SPDIF	CAN1/2/TIM12/13/14/QUADSPI/FMC/LCD	SAI2/QUADSPI/SDMMC2/DFSDM1/OTG2_HS/OTG1_FS/LCD	I2C4/CAN3/SDMMC2/ETH	UART7/FMC/SDMMC1/MDIOS/OTG2_FS	DCMI/LCD/DSI	LCD	SYS
Port C	PC0	-	-	-	DFSDM1_CKIN0	-	-	DFSDM1_DATIN4	-	SAI2_FS_B	-	OTG_HS_ULPI_STP	-	FMC_SDNWE	-	LCD_R5	EVENTOUT
	PC1	TRACED0	-	-	DFSDM1_DATAIN0	-	SPI2_MOSI/I2S2_SD	SAI1_SD_A	-	-	-	DFSDM1_CKIN4	ETH_MDC	MDIOS_MDC	-	-	EVENTOUT
	PC2	-	-	-	DFSDM1_CKIN1	-	SPI2_MISO	DFSDM1_CKOUT	-	-	-	OTG_HS_ULPI_DIR	ETH_MII_TXD2	FMC_SDNE0	-	-	EVENTOUT
	PC3	-	-	-	DFSDM1_DATAIN1	-	SPI2_MOSI/I2S2_SD	-	-	-	-	OTG_HS_ULPI_NXT	ETH_MII_TX_CLK	FMC_SDCKE0	-	-	EVENTOUT
	PC4	-	-	-	DFSDM1_CKIN2	-	I2S1_MCK	-	-	SPDIF_RX2	-	-	ETH_MII_RXD0/ETH_RMII_RXD0	FMC_SDNE0	-	-	EVENTOUT
	PC5	-	-	-	DFSDM1_DATAIN2	-	-	-	-	SPDIF_RX3	-	-	ETH_MII_RXD1/ETH_RMII_RXD1	FMC_SDCKE0	-	-	EVENTOUT
	PC6	-	-	TIM3_CH1	TIM8_CH1	-	I2S2_MCK	-	DFSDM1_CKIN3	USART6_TX	FMC_NWAIT	SDMMC2_D6	-	SDMMC_D6	DCMI_D0	LCD_HSYNC	EVENTOUT
	PC7	-	-	TIM3_CH2	TIM8_CH2	-	-	I2S3_MCK	DFSDM1_DATAIN3	USART6_RX	FMC_NE1	SDMMC2_D7	-	SDMMC_D7	DCMI_D1	LCD_G6	EVENTOUT
	PC8	TRACED1	-	TIM3_CH3	TIM8_CH3	-	-	-	UART5_RTS	USART6_CK	FMC_NE2/FMC_NCE	-	-	SDMMC_D0	DCMI_D2	-	EVENTOUT
	PC9	MCO2	-	TIM3_CH4	TIM8_CH4	I2C3_SDA	I2S_CKIN	-	UART5_CTS	-	QUADSPI_BK1_IO0	LCD_G3	-	SDMMC_D1	DCMI_D3	LCD_B2	EVENTOUT
	PC10	-	-	-	DFSDM1_CKIN5	-	-	SPI3_SCK/I2S3_CK	USART3_TX	UART4_TX	QUADSPI_BK1_IO1	-	-	SDMMC_D2	DCMI_D8	LCD_R2	EVENTOUT

Table 13. STM32F777xx, STM32F778Ax and STM32F779xx alternate function mapping (continued)

Port		AF0	AF1	AF2	AF3	AF4	AF5	AF6	AF7	AF8	AF9	AF10	AF11	AF12	AF13	AF14	AF15
		SYS	I2C4/UART5/TIM1/2	TIM3/4/5	TIM8/9/10/11/LPTIM1/DFSDM1/CEC	I2C1/2/3/4/USART1/CEC	SPI1/I2S1/SPI2/I2S2/SPI3/I2S3/SPI4/5/6	SPI2/I2S2/SPI3/I2S3/SAI1/I2C4/UART4/DFSDM1	SPI2/I2S2/SPI3/I2S3/SPI6/USART1/2/3/UART5/DFSDM1/SPDIF	SPI6/SAI2/USART6/UART4/5/7/8/OTG_FS/SPDIF	CAN1/2/TIM12/13/14/QUADSPI/FMC/LCD	SAI2/QUADSPI/SDMMC2/DFSDM1/OTG2_HS/OTG1_FS/LCD	I2C4/CAN3/SDMMC2/ETH	UART7/FMC/SDMMC1/MDIOS/OTG2_FS	DCMI/LCD/DSI	LCD	SYS
Port C	PC11	-	-	-	DFSDM1_DATAIN5	-	-	SPI3_MISO	USART3_RX	UART4_RX	QUADSPI_BK2_NCS	-	-	SDMMC_D3	DCMI_D4	-	EVENTOUT
	PC12	TRACED3	-	-	-	-	-	SPI3_MOSI/I2S3_SD	USART3_CK	UART5_TX	-	-	-	SDMMC_CK	DCMI_D9	-	EVENTOUT
	PC13	-	-	-	-	-	-	-	-	-	-	-	-	-	-	-	EVENTOUT
	PC14	-	-	-	-	-	-	-	-	-	-	-	-	-	-	-	EVENTOUT
	PC15	-	-	-	-	-	-	-	-	-	-	-	-	-	-	-	EVENTOUT
Port D	PD0	-	-	-	DFSDM1_CKIN6	-	-	DFSDM1_DATAIN7	-	UART4_RX	CAN1_RX	-	-	FMC_D2	-	-	EVENTOUT
	PD1	-	-	-	DFSDM1_DATAIN6	-	-	DFSDM1_CKIN7	-	UART4_TX	CAN1_TX	-	-	FMC_D3	-	-	EVENTOUT
	PD2	TRACED2	-	TIM3_ETR	-	-	-	-	-	UART5_RX	-	-	-	SDMMC_CMD	DCMI_D11	-	EVENTOUT
	PD3	-	-	-	DFSDM1_CKOUT	-	SPI2_SCK/I2S2_CK	DFSDM1_DATAIN0	USART2_CTS	-	-	-	-	FMC_CLK	DCMI_D5	LCD_G7	EVENTOUT
	PD4	-	-	-	-	-	-	DFSDM1_CKIN0	USART2_RTS	-	-	-	-	FMC_NOE	-	-	EVENTOUT
	PD5	-	-	-	-	-	-	-	USART2_TX	-	-	-	-	FMC_NWE	-	-	EVENTOUT
	PD6	-	-	-	DFSDM1_CKIN4	-	SPI3_MOSI/I2S3_SD	SAI1_SD_A	USART2_RX	-	-	DFSDM1_DATAIN1	SDMMC2_CK	FMC_NWAIT	DCMI_D10	LCD_B2	EVENTOUT
	PD7	-	-	-	DFSDM1_DATAIN4	-	SPI1_MOSI/I2S1_SD	DFSDM1_CKIN1	USART2_CK	SPDIF_RX0	-	-	SDMMC2_CMD	FMC_NE1	-	-	EVENTOUT

Table 13. STM32F777xx, STM32F778Ax and STM32F779xx alternate function mapping (continued)

Port		AF0	AF1	AF2	AF3	AF4	AF5	AF6	AF7	AF8	AF9	AF10	AF11	AF12	AF13	AF14	AF15
		SYS	I2C4/UART5/TIM1/2	TIM3/4/5	TIM8/9/10/11/LPTIM1/DFSDM1/CEC	I2C1/2/3/4/USART1/CEC	SPI1/I2S1/SPI2/I2S2/SPI3/I2S3/SPI4/5/6	SPI2/I2S2/SPI3/I2S3/SAI1/I2C4/UART4/DFSDM1	SPI2/I2S2/SPI3/I2S3/SPI6/USART1/2/3/UART5/DFSDM1/SPDIF	SPI6/SAI2/USART6/UART4/5/7/8/OTG_FS/SPDIF	CAN1/2/TIM12/13/14/QUADSPI/FMC/LCD	SAI2/QUADSPI/SDMMC2/DFSDM1/OTG2_HS/OTG1_FS/LCD	I2C4/CAN3/SDMMC2/ETH	UART7/FMC/SDMMC1/MDIOS/OTG2_FS	DCMI/LCD/DSI	LCD	SYS
Port D	PD8	-	-	-	DFSDM1_CKIN3	-	-	-	USART3_TX	SPDIF_RX1	-	-	-	FMC_D13	-	-	EVENTOUT
	PD9	-	-	-	DFSDM1_DATAIN3	-	-	-	USART3_RX	-	-	-	-	FMC_D14	-	-	EVENTOUT
	PD10	-	-	-	DFSDM1_CKOUT	-	-	-	USART3_CK	-	-	-	-	FMC_D15	-	LCD_B3	EVENTOUT
	PD11	-	-	-	-	I2C4_SMBA	-	-	USART3_CTS	-	QUADSPI_BK1_IO0	SAI2_SD_A	-	FMC_A16/FMC_CLE	-	-	EVENTOUT
	PD12	-	-	TIM4_CH1	LPTIM1_IN1	I2C4_SCL	-	-	USART3_RTS	-	QUADSPI_BK1_IO1	SAI2_FS_A	-	FMC_A17/FMC_ALE	-	-	EVENTOUT
	PD13	-	-	TIM4_CH2	LPTIM1_OUT	I2C4_SDA	-	-	-	-	QUADSPI_BK1_IO3	SAI2_SCK_A	-	FMC_A18	-	-	EVENTOUT
	PD14	-	-	TIM4_CH3	-	-	-	-	-	UART8_CTS	-	-	-	FMC_D0	-	-	EVENTOUT
	PD15	-	-	TIM4_CH4	-	-	-	-	-	UART8_RTS	-	-	-	FMC_D1	-	-	EVENTOUT
Port E	PE0	-	-	TIM4_ETR	LPTIM1_ETR	-	-	-	-	UART8_Rx	-	SAI2_MCK_A	-	FMC_NBL0	DCMI_D2	-	EVENTOUT
	PE1	-	-	-	LPTIM1_IN2	-	-	-	-	UART8_Tx	-	-	-	FMC_NBL1	DCMI_D3	-	EVENTOUT
	PE2	TRACECLK	-	-	-	-	SPI4_SCK	SAI1_MCLK_A	-	-	QUADSPI_BK1_IO2	-	ETH_MII_TXD3	FMC_A23	-	-	EVENTOUT
	PE3	TRACED0	-	-	-	-	-	SAI1_SD_B	-	-	-	-	-	FMC_A19	-	-	EVENTOUT

Table 13. STM32F777xx, STM32F778Ax and STM32F779xx alternate function mapping (continued)

Port		AF0	AF1	AF2	AF3	AF4	AF5	AF6	AF7	AF8	AF9	AF10	AF11	AF12	AF13	AF14	AF15
		SYS	I2C4/UART5/TIM1/2	TIM3/4/5	TIM8/9/10/11/LPTIM1/DFSDM1/CEC	I2C1/2/3/4/USART1/CEC	SPI1/I2S1/SPI2/I2S2/SPI3/I2S3/SPI4/5/6	SPI2/I2S2/SPI3/I2S3/SAI1/I2C4/UART4/DFSDM1	SPI2/I2S2/SPI3/I2S3/SPI6/USART1/2/3/UART5/DFSDM1/SPDIF	SPI6/SAI2/USART6/UART4/5/7/8/OTG_FS/SPDIF	CAN1/2/TIM12/13/14/QUADSPI/FMC/LCD	SAI2/QUADSPI/SDMMC2/DFSDM1/OTG2_HS/OTG1_FS/LCD	I2C4/CAN3/SDMMC2/ETH	UART7/FMC/SDMMC1/MDIOS/OTG2_FS	DCMI/LCD/DSI	LCD	SYS
Port E	PE4	TRACED1	-	-	-	-	SPI4_NSS	SAI1_FS_A	-	-	-	DFSDM1_DATAIN3	-	FMC_A20	DCMI_D4	LCD_B0	EVENTOUT
	PE5	TRACED2	-	-	TIM9_CH1	-	SPI4_MISO	SAI1_SCK_A	-	-	-	DFSDM1_CKIN3	-	FMC_A21	DCMI_D6	LCD_G0	EVENTOUT
	PE6	TRACED3	TIM1_BKIN2	-	TIM9_CH2	-	SPI4_MOSI	SAI1_SD_A	-	-	-	SAI2_MCK_B	-	FMC_A22	DCMI_D7	LCD_G1	EVENTOUT
	PE7	-	TIM1_ETR	-	-	-	-	DFSDM1_DATAIN2	-	UART7_Rx	-	QUADSPI_BK2_IO0	-	FMC_D4	-	-	EVENTOUT
	PE8	-	TIM1_CH1N	-	-	-	-	DFSDM1_CKIN2	-	UART7_Tx	-	QUADSPI_BK2_IO1	-	FMC_D5	-	-	EVENTOUT
	PE9	-	TIM1_CH1	-	-	-	-	DFSDM1_CKOUT	-	UART7_RTS	-	QUADSPI_BK2_IO2	-	FMC_D6	-	-	EVENTOUT
	PE10	-	TIM1_CH2N	-	-	-	-	DFSDM1_DATAIN4	-	UART7_CTS	-	QUADSPI_BK2_IO3	-	FMC_D7	-	-	EVENTOUT
	PE11	-	TIM1_CH2	-	-	-	SPI4_NSS	DFSDM1_CKIN4	-	-	-	SAI2_SD_B	-	FMC_D8	-	LCD_G3	EVENTOUT
	PE12	-	TIM1_CH3N	-	-	-	SPI4_SCK	DFSDM1_DATAIN5	-	-	-	SAI2_SCK_B	-	FMC_D9	-	LCD_B4	EVENTOUT
	PE13	-	TIM1_CH3	-	-	-	SPI4_MISO	DFSDM1_CKIN5	-	-	-	SAI2_FS_B	-	FMC_D10	-	LCD_DE	EVENTOUT
	PE14	-	TIM1_CH4	-	-	-	SPI4_MOSI	-	-	-	-	SAI2_MCK_B	-	FMC_D11	-	LCD_CLK	EVENTOUT
	PE15	-	TIM1_BKIN	-	-	-	-	-	-	-	-	-	-	FMC_D12	-	LCD_R7	EVENTOUT

Table 13. STM32F777xx, STM32F778Ax and STM32F779xx alternate function mapping (continued)

Port		AF0	AF1	AF2	AF3	AF4	AF5	AF6	AF7	AF8	AF9	AF10	AF11	AF12	AF13	AF14	AF15
		SYS	I2C4/UART5/TIM1/2	TIM3/4/5	TIM8/9/10/11/LPTIM1/DFSDM1/CEC	I2C1/2/3/4/USART1/CEC	SPI1/I2S1/SPI2/I2S2/SPI3/I2S3/SPI4/5/6	SPI2/I2S2/SPI3/I2S3/SAI1/I2C4/UART4/DFSDM1	SPI2/I2S2/SPI3/I2S3/SPI6/USART1/2/3/UART5/DFSDM1/SPDIF	SPI6/SAI2/USART6/UART4/5/7/8/OTG_FS/SPDIF	CAN1/2/TIM12/13/14/QUADSPI/FMC/LCD	SAI2/QUADSPI/SDMMC2/DFSDM1/OTG2_HS/OTG1_FS/LCD	I2C4/CAN3/SDMMC2/ETH	UART7/FMC/SDMMC1/MDIOS/OTG2_FS	DCMI/LCD/DSI	LCD	SYS
Port F	PF0	-	-	-	-	I2C2_SDA	-	-	-	-	-	-	-	FMC_A0	-	-	EVENTOUT
	PF1	-	-	-	-	I2C2_SCL	-	-	-	-	-	-	-	FMC_A1	-	-	EVENTOUT
	PF2	-	-	-	-	I2C2_SMBA	-	-	-	-	-	-	-	FMC_A2	-	-	EVENTOUT
	PF3	-	-	-	-	-	-	-	-	-	-	-	-	FMC_A3	-	-	EVENTOUT
	PF4	-	-	-	-	-	-	-	-	-	-	-	-	FMC_A4	-	-	EVENTOUT
	PF5	-	-	-	-	-	-	-	-	-	-	-	-	FMC_A5	-	-	EVENTOUT
	PF6	-	-	-	TIM10_CH1	-	SPI5_NSS	SAI1_SD_B	-	UART7_Rx	QUADSPI_BK1_IO3	-	-	-	-	-	EVENTOUT
	PF7	-	-	-	TIM11_CH1	-	SPI5_SCK	SAI1_MCLK_B	-	UART7_Tx	QUADSPI_BK1_IO2	-	-	-	-	-	EVENTOUT
	PF8	-	-	-	-	-	SPI5_MISO	SAI1_SCK_B	-	UART7_RTS	TIM13_CH1	QUADSPI_BK1_IO0	-	-	-	-	EVENTOUT
	PF9	-	-	-	-	-	SPI5_MOSI	SAI1_FS_B	-	UART7_CTS	TIM14_CH1	QUADSPI_BK1_IO1	-	-	-	-	EVENTOUT
	PF10	-	-	-	-	-	-	-	-	-	QUADSPI_CLK	-	-	-	DCMI_D11	LCD_DE	EVENTOUT
	PF11	-	-	-	-	-	SPI5_MOSI	-	-	-	-	SAI2_SD_B	-	FMC_SDNRAS	DCMI_D12	-	EVENTOUT

Table 13. STM32F777xx, STM32F778Ax and STM32F779xx alternate function mapping (continued)

Port		AF0	AF1	AF2	AF3	AF4	AF5	AF6	AF7	AF8	AF9	AF10	AF11	AF12	AF13	AF14	AF15
		SYS	I2C4/UART5/TIM1/2	TIM3/4/5	TIM8/9/10/11/LPTIM1/DFSDM1/CEC	I2C1/2/3/4/USART1/CEC	SPI1/I2S1/SPI2/I2S2/SPI3/I2S3/SPI4/5/6	SPI2/I2S2/SPI3/I2S3/SAI1/I2C4/UART4/DFSDM1	SPI2/I2S2/SPI3/I2S3/SPI6/USART1/2/3/UART5/DFSDM1/SPDIF	SPI6/SAI2/USART6/UART4/5/7/8/OTG_FS/SPDIF	CAN1/2/TIM12/13/14/QUADSPI/FMC/LCD	SAI2/QUADSPI/SDMMC2/DFSDM1/OTG2_HS/OTG1_FS/LCD	I2C4/CAN3/SDMMC2/ETH	UART7/FMC/SDMMC1/MDIOS/OTG2_FS	DCMI/LCD/DSI	LCD	SYS
Port F	PF12	-	-	-	-	-	-	-	-	-	-	-	-	FMC_A6	-	-	EVENTOUT
	PF13	-	-	-	-	I2C4_SMBA	-	DFSDM1_DATAIN6	-	-	-	-	-	FMC_A7	-	-	EVENTOUT
	PF14	-	-	-	-	I2C4_SCL	-	DFSDM1_CKIN6	-	-	-	-	-	FMC_A8	-	-	EVENTOUT
	PF15	-	-	-	-	I2C4_SDA	-	-	-	-	-	-	-	FMC_A9	-	-	EVENTOUT
Port G	PG0	-	-	-	-	-	-	-	-	-	-	-	-	FMC_A10	-	-	EVENTOUT
	PG1	-	-	-	-	-	-	-	-	-	-	-	-	FMC_A11	-	-	EVENTOUT
	PG2	-	-	-	-	-	-	-	-	-	-	-	-	FMC_A12	-	-	EVENTOUT
	PG3	-	-	-	-	-	-	-	-	-	-	-	-	FMC_A13	-	-	EVENTOUT
	PG4	-	-	-	-	-	-	-	-	-	-	-	-	FMC_A14/FMC_BA0	-	-	EVENTOUT
	PG5	-	-	-	-	-	-	-	-	-	-	-	-	FMC_A15/FMC_BA1	-	-	EVENTOUT
	PG6	-	-	-	-	-	-	-	-	-	-	-	-	FMC_NE3	DCMI_D12	LCD_R7	EVENTOUT
	PG7	-	-	-	-	-	-	SAI1_MCLK_A	-	USART6_CK	-	-	-	FMC_INT	DCMI_D13	LCD_CLK	EVENTOUT

Table 13. STM32F777xx, STM32F778Ax and STM32F779xx alternate function mapping (continued)

Port		AF0	AF1	AF2	AF3	AF4	AF5	AF6	AF7	AF8	AF9	AF10	AF11	AF12	AF13	AF14	AF15
		SYS	I2C4/UART5/TIM1/2	TIM3/4/5	TIM8/9/10/11/LPTIM1/DFSDM1/CEC	I2C1/2/3/4/USART1/CEC	SPI1/I2S1/SPI2/I2S2/SPI3/I2S3/SPI4/5/6	SPI2/I2S2/SPI3/I2S3/SAI1/I2C4/UART4/DFSDM1	SPI2/I2S2/SPI3/I2S3/SPI6/USART1/2/3/UART5/DFSDM1/SPDIF	SPI6/SAI2/USART6/UART4/5/7/8/OTG_FS/SPDIF	CAN1/2/TIM12/13/14/QUADSPI/FMC/LCD	SAI2/QUADSPI/SDMMC2/DFSDM1/OTG2_HS/OTG1_FS/LCD	I2C4/CAN3/SDMMC2/ETH	UART7/FMC/SDMMC1/MDIOS/OTG2_FS	DCMI/LCD/DSI	LCD	SYS
Port G	PG8	-	-	-	-	-	SPI6_NSS	-	SPDIF_RX2	USART6_RTS	-	-	ETH_PPS_OUT	FMC_SDCLK	-	LCD_G7	EVENTOUT
	PG9	-	-	-	-	-	SPI1_MISO	-	SPDIF_RX3	USART6_RX	QUADSPI_BK2_IO2	SAI2_FS_B	SDMMC2_D0	FMC_NE2/FMC_NCE	DCMI_VSYNC	-	EVENTOUT
	PG10	-	-	-	-	-	SPI1_NSS/I2S1_WS	-	-	-	LCD_G3	SAI2_SD_B	SDMMC2_D1	FMC_NE3	DCMI_D2	LCD_B2	EVENTOUT
	PG11	-	-	-	-	-	SPI1_SCK/I2S1_CK	-	SPDIF_RX0	-	-	SDMMC2_D2	ETH_MII_TX_EN/ETH_RMII_TX_EN	-	DCMI_D3	LCD_B3	EVENTOUT
	PG12	-	-	-	LPTIM1_IN1	-	SPI6_MISO	-	SPDIF_RX1	USART6_RTS	LCD_B4	-	SDMMC2_D3	FMC_NE4	-	LCD_B1	EVENTOUT
	PG13	TRACED0	-	-	LPTIM1_OUT	-	SPI6_SCK	-	-	USART6_CTS	-	-	ETH_MII_TXD0/ETH_RMII_TXD0	FMC_A24	-	LCD_R0	EVENTOUT
	PG14	TRACED1	-	-	LPTIM1_ETR	-	SPI6_MOSI	-	-	USART6_TX	QUADSPI_BK2_IO3	-	ETH_MII_TXD1/ETH_RMII_TXD1	FMC_A25	-	LCD_B0	EVENTOUT
	PG15	-	-	-	-	-	-	-	-	USART6_CTS	-	-	-	FMC_SDNCAS	DCMI_D13	-	EVENTOUT

Table 13. STM32F777xx, STM32F778Ax and STM32F779xx alternate function mapping (continued)

Port		AF0	AF1	AF2	AF3	AF4	AF5	AF6	AF7	AF8	AF9	AF10	AF11	AF12	AF13	AF14	AF15
		SYS	I2C4/UART5/TIM1/2	TIM3/4/5	TIM8/9/10/11/LPTIM1/DFSDM1/CEC	I2C1/2/3/4/USART1/CEC	SPI1/I2S1/SPI2/I2S2/SPI3/I2S3/SPI4/5/6	SPI2/I2S2/SPI3/I2S3/SAI1/I2C4/UART4/DFSDM1	SPI2/I2S2/SPI3/I2S3/SPI6/USART1/2/3/UART5/DFSDM1/SPDIF	SPI6/SAI2/USART6/UART4/5/7/8/OTG_FS/SPDIF	CAN1/2/TIM12/13/14/QUADSPI/FMC/LCD	SAI2/QUADSPI/SDMMC2/DFSDM1/OTG2_HS/OTG1_FS/LCD	I2C4/CAN3/SDMMC2/ETH	UART7/FMC/SDMMC1/MDIOS/OTG2_FS	DCMI/LCD/DSI	LCD	SYS
Port H	PH0	-	-	-	-	-	-	-	-	-	-	-	-	-	-	-	EVENTOUT
	PH1	-	-	-	-	-	-	-	-	-	-	-	-	-	-	-	EVENTOUT
	PH2	-	-	-	LPTIM1_IN2	-	-	-	-	-	QUADSPI_BK2_IO0	SAI2_SCK_B	ETH_MII_CRS	FMC_SDCKE0	-	LCD_R0	EVENTOUT
	PH3	-	-	-	-	-	-	-	-	-	QUADSPI_BK2_IO1	SAI2_MCK_B	ETH_MII_COL	FMC_SDNE0	-	LCD_R1	EVENTOUT
	PH4	-	-	-	-	I2C2_SCL	-	-	-	-	LCD_G5	OTG_HS_ULPI_NXT	-	-	-	LCD_G4	EVENTOUT
	PH5	-	-	-	-	I2C2_SDA	SPI5_NSS	-	-	-	-	-	-	FMC_SDNWE	-	-	EVENTOUT
	PH6	-	-	-	-	I2C2_SMBA	SPI5_SCK	-	-	-	TIM12_CH1	-	ETH_MII_RXD2	FMC_SDNE1	DCMI_D8	-	EVENTOUT
	PH7	-	-	-	-	I2C3_SCL	SPI5_MISO	-	-	-	-	-	ETH_MII_RXD3	FMC_SDCKE1	DCMI_D9	-	EVENTOUT
	PH8	-	-	-	-	I2C3_SDA	-	-	-	-	-	-	-	FMC_D16	DCMI_HSYNC	LCD_R2	EVENTOUT
	PH9	-	-	-	-	I2C3_SMBA	-	-	-	-	TIM12_CH2	-	-	FMC_D17	DCMI_D0	LCD_R3	EVENTOUT
	PH10	-	-	TIM5_CH1	-	I2C4_SMBA	-	-	-	-	-	-	-	FMC_D18	DCMI_D1	LCD_R4	EVENTOUT
	PH11	-	-	TIM5_CH2	-	I2C4_SCL	-	-	-	-	-	-	-	FMC_D19	DCMI_D2	LCD_R5	EVENTOUT
	PH12	-	-	TIM5_CH3	-	I2C4_SDA	-	-	-	-	-	-	-	FMC_D20	DCMI_D3	LCD_R6	EVENTOUT
	PH13	-	-	-	TIM8_CH1N	-	-	-	-	UART4_TX	CAN1_TX	-	-	FMC_D21	-	LCD_G2	EVENTOUT

Table 13. STM32F777xx, STM32F778Ax and STM32F779xx alternate function mapping (continued)

Port		AF0	AF1	AF2	AF3	AF4	AF5	AF6	AF7	AF8	AF9	AF10	AF11	AF12	AF13	AF14	AF15
		SYS	I2C4/UART5/TIM1/2	TIM3/4/5	TIM8/9/10/11/LPTIM1/DFSDM1/CEC	I2C1/2/3/4/USART1/CEC	SPI1/I2S1/SPI2/I2S2/SPI3/I2S3/SPI4/5/6	SPI2/I2S2/SPI3/I2S3/SAI1/I2C4/UART4/DFSDM1	SPI2/I2S2/SPI3/I2S3/SPI6/USART1/2/3/UART5/DFSDM1/SPDIF	SPI6/SAI2/USART6/UART4/5/7/8/OTG_FS/SPDIF	CAN1/2/TIM12/13/14/QUADSPI/FMC/LCD	SAI2/QUADSPI/SDMMC2/DFSDM1/OTG2_HS/OTG1_FS/LCD	I2C4/CAN3/SDMMC2/ETH	UART7/FMC/SDMMC1/MDIOS/OTG2_FS	DCMI/LCD/DSI	LCD	SYS
Port H	PH14	-	-	-	TIM8_CH2N	-	-	-	-	UART4_RX	CAN1_RX	-	-	FMC_D22	DCMI_D4	LCD_G3	EVENTOUT
	PH15	-	-	-	TIM8_CH3N	-	-	-	-	-	-	-	-	FMC_D23	DCMI_D11	LCD_G4	EVENTOUT
Port I	PI0	-	-	TIM5_CH4	-	-	SPI2_NSS/I2S2_WS	-	-	-	-	-	-	FMC_D24	DCMI_D13	LCD_G5	EVENTOUT
	PI1	-	-	-	TIM8_BKIN2	-	SPI2_SCK/I2S2_CK	-	-	-	-	-	-	FMC_D25	DCMI_D8	LCD_G6	EVENTOUT
	PI2	-	-	-	TIM8_CH4	-	SPI2_MISO	-	-	-	-	-	-	FMC_D26	DCMI_D9	LCD_G7	EVENTOUT
	PI3	-	-	-	TIM8_ETR	-	SPI2_MOSI/I2S2_SD	-	-	-	-	-	-	FMC_D27	DCMI_D10	-	EVENTOUT
	PI4	-	-	-	TIM8_BKIN	-	-	-	-	-	-	SAI2_MCK_A	-	FMC_NBL2	DCMI_D5	LCD_B4	EVENTOUT
	PI5	-	-	-	TIM8_CH1	-	-	-	-	-	-	SAI2_SCK_A	-	FMC_NBL3	DCMI_VSYNC	LCD_B5	EVENTOUT
	PI6	-	-	-	TIM8_CH2	-	-	-	-	-	-	SAI2_SD_A	-	FMC_D28	DCMI_D6	LCD_B6	EVENTOUT
	PI7	-	-	-	TIM8_CH3	-	-	-	-	-	-	SAI2_FS_A	-	FMC_D29	DCMI_D7	LCD_B7	EVENTOUT
	PI8	-	-	-	-	-	-	-	-	-	-	-	-	-	-	-	EVENTOUT
	PI9	-	-	-	-	-	-	-	-	UART4_RX	CAN1_RX	-	-	FMC_D30	-	LCD_VSYNC	EVENTOUT
	PI10	-	-	-	-	-	-	-	-	-	-	-	ETH_MII_RX_ER	FMC_D31	-	LCD_HSYNC	EVENTOUT
	PI11	-	-	-	-	-	-	-	-	-	LCD_G6	OTG_HS_ULPI_DIR	-	-	-	-	EVENTOUT

Table 13. STM32F777xx, STM32F778Ax and STM32F779xx alternate function mapping (continued)

Port		AF0	AF1	AF2	AF3	AF4	AF5	AF6	AF7	AF8	AF9	AF10	AF11	AF12	AF13	AF14	AF15
		SYS	I2C4/UART5/TIM1/2	TIM3/4/5	TIM8/9/10/11/LPTIM1/DFSDM1/CEC	I2C1/2/3/4/USART1/CEC	SPI1/I2S1/SPI2/I2S2/SPI3/I2S3/SPI4/5/6	SPI2/I2S2/SPI3/I2S3/SAI1/I2C4/UART4/DFSDM1	SPI2/I2S2/SPI3/I2S3/SPI6/USART1/2/3/UART5/DFSDM1/SPDIF	SPI6/SAI2/USART6/UART4/5/7/8/OTG_FS/SPDIF	CAN1/2/TIM12/13/14/QUADSPI/FMC/LCD	SAI2/QUADSPI/SDMMC2/DFSDM1/OTG2_HS/OTG1_FS/LCD	I2C4/CAN3/SDMMC2/ETH	UART7/FMC/SDMMC1/MDIOS/OTG2_FS	DCMI/LCD/DSI	LCD	SYS
Port I	PI12	-	-	-	-	-	-	-	-	-	-	-	-	-	-	LCD_HSYNC	EVENTOUT
	PI13	-	-	-	-	-	-	-	-	-	-	-	-	-	-	LCD_VSYNC	EVENTOUT
	PI14	-	-	-	-	-	-	-	-	-	-	-	-	-	-	LCD_CLK	EVENTOUT
	PI15	-	-	-	-	-	-	-	-	-	LCD_G2	-	-	-	-	LCD_R0	EVENTOUT
Port J	PJ0	-	-	-	-	-	-	-	-	-	LCD_R7	-	-	-	-	LCD_R1	EVENTOUT
	PJ1	-	-	-	-	-	-	-	-	-	-	-	-	-	-	LCD_R2	EVENTOUT
	PJ2	-	-	-	-	-	-	-	-	-	-	-	-	-	DSI_TE	LCD_R3	EVENTOUT
	PJ3	-	-	-	-	-	-	-	-	-	-	-	-	-	-	LCD_R4	EVENTOUT
	PJ4	-	-	-	-	-	-	-	-	-	-	-	-	-	-	LCD_R5	EVENTOUT
	PJ5	-	-	-	-	-	-	-	-	-	-	-	-	-	-	LCD_R6	EVENTOUT
	PJ6	-	-	-	-	-	-	-	-	-	-	-	-	-	-	LCD_R7	EVENTOUT
	PJ7	-	-	-	-	-	-	-	-	-	-	-	-	-	-	LCD_G0	EVENTOUT
	PJ8	-	-	-	-	-	-	-	-	-	-	-	-	-	-	LCD_G1	EVENTOUT
	PJ9	-	-	-	-	-	-	-	-	-	-	-	-	-	-	LCD_G2	EVENTOUT
	PJ10	-	-	-	-	-	-	-	-	-	-	-	-	-	-	LCD_G3	EVENTOUT

Table 13. STM32F777xx, STM32F778Ax and STM32F779xx alternate function mapping (continued)

Port		AF0	AF1	AF2	AF3	AF4	AF5	AF6	AF7	AF8	AF9	AF10	AF11	AF12	AF13	AF14	AF15
		SYS	I2C4/UART5/TIM1/2	TIM3/4/5	TIM8/9/10/11/LPTIM1/DFSDM1/CEC	I2C1/2/3/4/USART1/CEC	SPI1/I2S1/SPI2/I2S2/SPI3/I2S3/SPI4/5/6	SPI2/I2S2/SPI3/I2S3/SAI1/I2C4/UART4/DFSDM1	SPI2/I2S2/SPI3/I2S3/SPI6/USART1/2/3/UART5/DFSDM1/SPDIF	SPI6/SAI2/USART6/UART4/5/7/8/OTG_FS/SPDIF	CAN1/2/TIM12/13/14/QUADSPI/FMC/LCD	SAI2/QUADSPI/SDMMC2/DFSDM1/OTG2_HS/OTG1_FS/LCD	I2C4/CAN3/SDMMC2/ETH	UART7/FMC/SDMMC1/MDIOS/OTG2_FS	DCMI/LCD/DSI	LCD	SYS
Port J	PJ11	-	-	-	-	-	-	-	-	-	-	-	-	-	-	LCD_G4	EVENTOUT
	PJ12	-	-	-	-	-	-	-	-	-	LCD_G3	-	-	-	-	LCD_B0	EVENTOUT
	PJ13	-	-	-	-	-	-	-	-	-	LCD_G4	-	-	-	-	LCD_B1	EVENTOUT
	PJ14	-	-	-	-	-	-	-	-	-	-	-	-	-	-	LCD_B2	EVENTOUT
	PJ15	-	-	-	-	-	-	-	-	-	-	-	-	-	-	LCD_B3	EVENTOUT
Port K	PK0	-	-	-	-	-	-	-	-	-	-	-	-	-	-	LCD_G5	EVENTOUT
	PK1	-	-	-	-	-	-	-	-	-	-	-	-	-	-	LCD_G6	EVENTOUT
	PK2	-	-	-	-	-	-	-	-	-	-	-	-	-	-	LCD_G7	EVENTOUT
	PK3	-	-	-	-	-	-	-	-	-	-	-	-	-	-	LCD_B4	EVENTOUT
	PK4	-	-	-	-	-	-	-	-	-	-	-	-	-	-	LCD_B5	EVENTOUT
	PK5	-	-	-	-	-	-	-	-	-	-	-	-	-	-	LCD_B6	EVENTOUT
	PK6	-	-	-	-	-	-	-	-	-	-	-	-	-	-	LCD_B7	EVENTOUT
	PK7	-	-	-	-	-	-	-	-	-	-	-	-	-	-	LCD_DE	EVENTOUT

5 Memory mapping

Refer to the product line reference manual for details on the memory mapping as well as the boundary addresses for all peripherals.

6 Electrical characteristics

6.1 Parameter conditions

Unless otherwise specified, all voltages are referenced to V_{SS}.

6.1.1 Minimum and maximum values

Unless otherwise specified the minimum and maximum values are guaranteed in the worst conditions of ambient temperature, supply voltage and frequencies by tests in production on 100% of the devices with an ambient temperature at T_A = 25 °C and T_A = $T_A$max (given by the selected temperature range).

Data based on characterization results, design simulation and/or technology characteristics are indicated in the table footnotes. Based on characterization, the minimum and maximum values refer to sample tests and represent the mean value plus or minus three times the standard deviation (mean±3σ).

6.1.2 Typical values

Unless otherwise specified, typical data are based on T_A = 25 °C, V_{DD} = 3.3 V (for the 1.7 V ≤ V_{DD} ≤ 3.6 V voltage range). They are given only as design guidelines and are not tested.

Typical ADC accuracy values are determined by characterization of a batch of samples from a standard diffusion lot over the full temperature range, where 95% of the devices have an error less than or equal to the value indicated (mean±2σ).

6.1.3 Typical curves

Unless otherwise specified, all typical curves are given only as design guidelines and are not tested.

6.1.4 Loading capacitor

The loading conditions used for pin parameter measurement are shown in *Figure 22*.

6.1.5 Pin input voltage

The input voltage measurement on a pin of the device is described in *Figure 23*.

Figure 22. Pin loading conditions

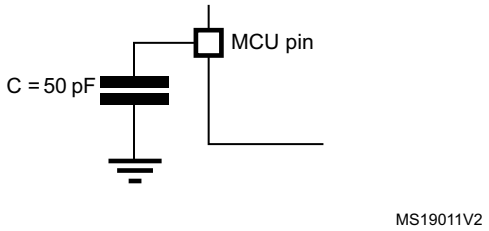

Figure 23. Pin input voltage

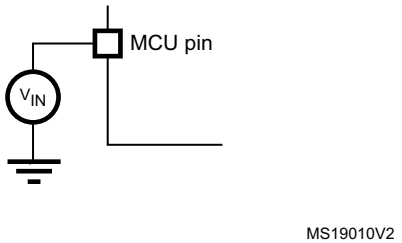

6.1.6 Power supply scheme

Figure 24. STM32F769xx/STM32F779xx power supply scheme

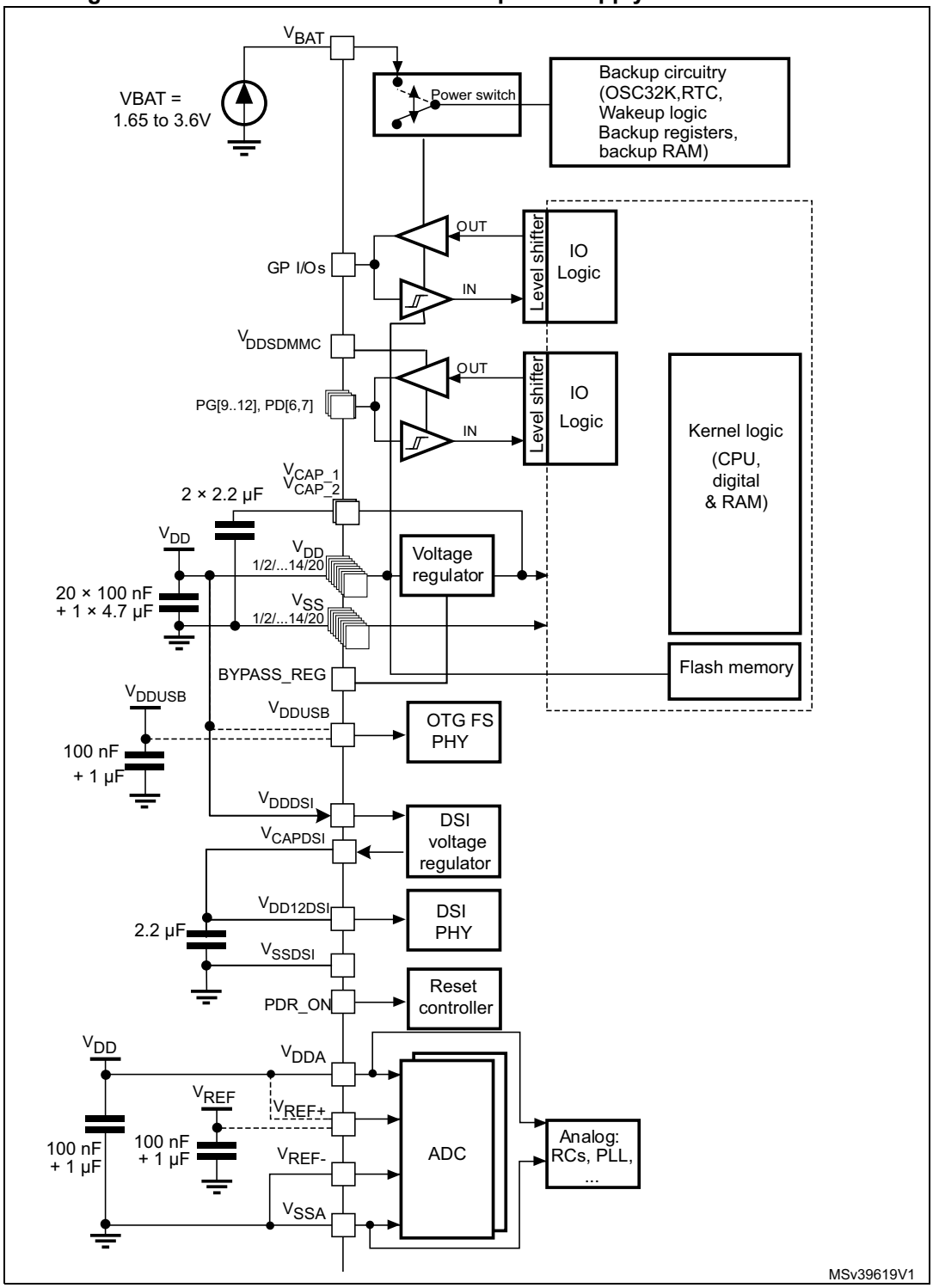

Figure 25. STM32F765xx/STM32F767xx/STM32F777xx power supply scheme

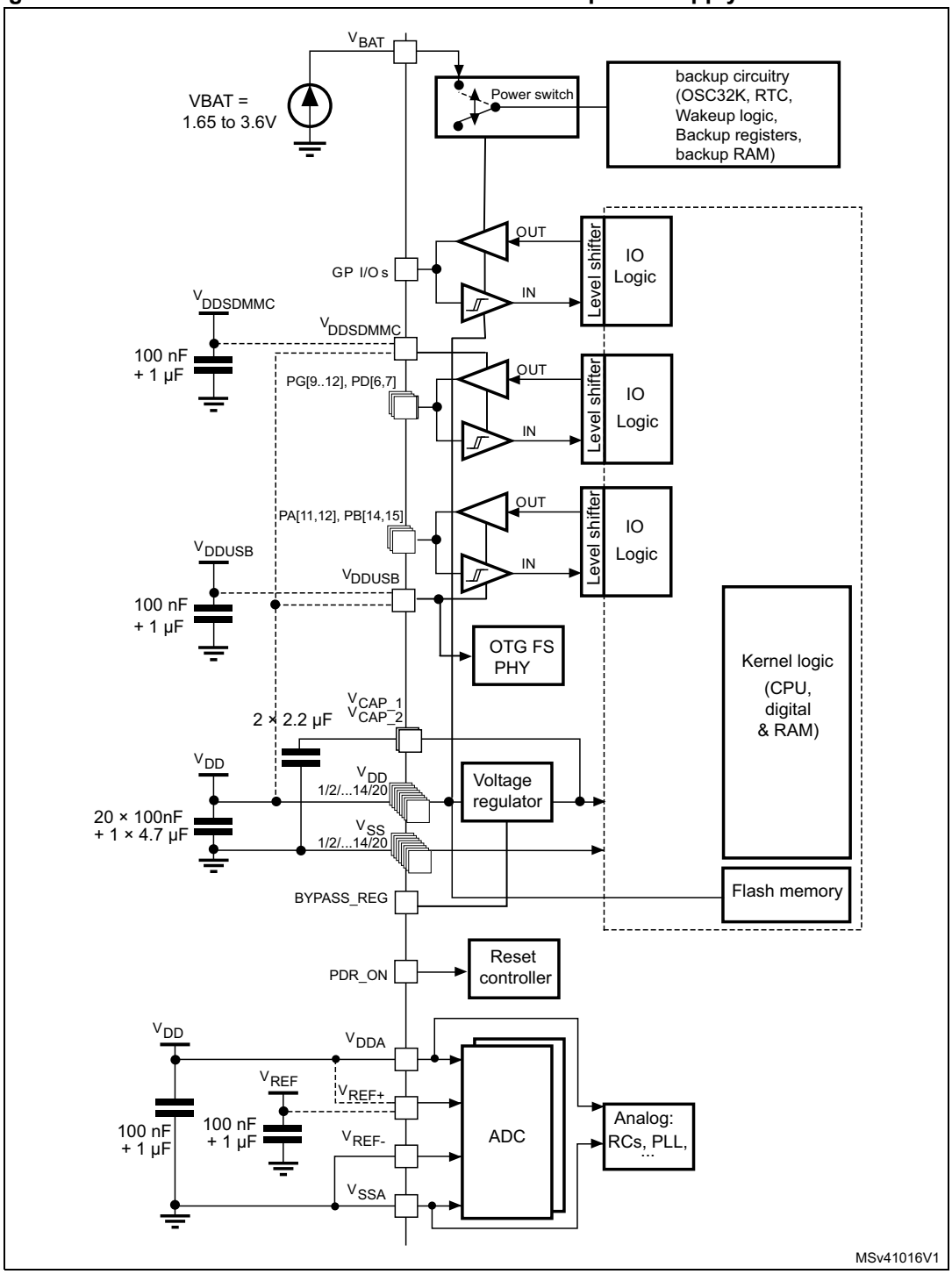

1. To connect BYPASS_REG and PDR_ON pins, refer to *Section 3.18: Power supply supervisor* and *Section 3.19: Voltage regulator*.
2. The two 2.2 µF ceramic capacitors should be replaced by two 100 nF decoupling capacitors when the voltage regulator is OFF.
3. The 4.7 µF ceramic capacitor must be connected to one of the V_{DD} pin.
4. V_{DDA}=V_{DD} and V_{SSA}=V_{SS}.

Caution: Each power supply pair (V_{DD}/V_{SS}, V_{DDA}/V_{SSA} ...) must be decoupled with filtering ceramic capacitors as shown above. These capacitors must be placed as close as possible to, or below, the appropriate pins on the underside of the PCB to ensure good operation of the device. It is not recommended to remove filtering capacitors to reduce PCB size or cost. This might cause incorrect operation of the device.

6.1.7 Current consumption measurement

Figure 26. Current consumption measurement scheme

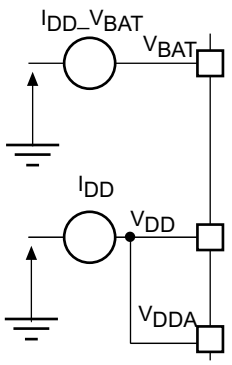

6.2 Absolute maximum ratings

Stresses above the absolute maximum ratings listed in *Table 14: Voltage characteristics*, *Table 15: Current characteristics*, and *Table 16: Thermal characteristics* may cause permanent damage to the device. These are stress ratings only and the functional operation of the device at these conditions is not implied. Exposure to maximum rating conditions for extended periods may affect device reliability. The device mission profile (application conditions) is compliant with JEDEC JESD47 Qualification Standard. Extended mission profiles are available on demand.

Table 14. Voltage characteristics

Symbol	Ratings	Min	Max	Unit
$V_{DD}–V_{SS}$	External main supply voltage (including V_{DDA}, V_{DD}, V_{BAT}, V_{DDUSB}, V_{DDDSI} (1) and $V_{DDSDMMC}$)(2)	− 0.3	4.0	V
V_{IN}	Input voltage on FT pins(3)	V_{SS} − 0.3	Min(Min(V_{DD}, V_{DDA}, V_{DDUSB}) +3.6, 5.5 V)(4)(5)	
	Input voltage on TTa pins	V_{SS} − 0.3	4.0	
	Input voltage on any other pin	V_{SS} − 0.3	4.0	
	Input voltage on BOOT pin	V_{SS}	9.0	
$\|\Delta V_{DDx}\|$	Variations between different V_{DD} power pins	-	50	mV
$\|V_{SSX} - V_{SS}\|$	Variations between all the different ground pins(6)	-	50	
$V_{ESD(HBM)}$	Electrostatic discharge voltage (human body model)	see *Section 6.3.18: Absolute maximum ratings (electrical sensitivity)*		-

1. Applicable only for STM32F7x9 sales types.
2. All main power (V_{DD}, V_{DDA}, $V_{DDSDMMC}$, V_{DDUSB}, V_{DDDSI}) and ground (V_{SS}, V_{SSA}) pins must always be connected to the external power supply, in the permitted range.
3. V_{IN} maximum value must always be respected. Refer to *Table 15* for the values of the maximum allowed injected current.
4. This formula has to be applied on power supplies related to the IO structure described by the pin definition table.
5. To sustain a voltage higher than 4 V the internal pull-up/pull-down resistors must be disabled.
6. Include V_{REF-} pin.

Table 15. Current characteristics

Symbol	Ratings	Max.	Unit
ΣI_{VDD}	Total current into sum of all V_{DD_x} power lines (source)(1)	420	mA
ΣI_{VSS}	Total current out of sum of all V_{SS_x} ground lines (sink)(1)	−420	
ΣI_{VDDUSB}	Total current into V_{DDUSB} power line (source)	25	
$\Sigma I_{VDDSDMMC}$	Total current into $V_{DDSDMMC}$ power line (source)	60	
I_{VDD}	Maximum current into each V_{DD_x} power line (source)(1)	100	
$I_{VDDSDMMC}$	Maximum current into $V_{DDSDMMC}$ power line (source): PG[12:9], PD[7:6]	100	
I_{VSS}	Maximum current out of each V_{SS_x} ground line (sink)(1)	−100	
I_{IO}	Output current sunk by any I/O and control pin	25	
	Output current sourced by any I/Os and control pin	−25	
ΣI_{IO}	Total output current sunk by sum of all I/O and control pins (2)	120	
	Total output current sunk by sum of all USB I/Os	25	
	Total output current sunk by sum of all SDMMC I/Os	120	
	Total output current sourced by sum of all I/Os and control pins except USB I/Os(2)	−120	
$I_{INJ(PIN)}$	Injected current on FT, FTf, RST and B pins (3)	−5/+0	
	Injected current on TTa pins(4)	±5	
$\Sigma I_{INJ(PIN)}$(4)	Total injected current (sum of all I/O and control pins)(5)	±25	

1. All main power (V_{DD}, V_{DDA}) and ground (V_{SS}, V_{SSA}) pins must always be connected to the external power supply, in the permitted range.
2. This current consumption must be correctly distributed over all I/Os and control pins. The total output current must not be sunk/sourced between two consecutive power supply pins referring to high pin count LQFP packages.
3. Positive injection is not possible on these I/Os and does not occur for input voltages lower than the specified maximum value.
4. A positive injection is induced by $V_{IN}>V_{DDA}$ while a negative injection is induced by $V_{IN}<V_{SS}$. $I_{INJ(PIN)}$ must never be exceeded. Refer to *Table 14: Voltage characteristics* for the values of the maximum allowed input voltage.
5. When several inputs are submitted to a current injection, the maximum $\Sigma I_{INJ(PIN)}$ is the absolute sum of the positive and negative injected currents (instantaneous values).

Table 16. Thermal characteristics

Symbol	Ratings	Value	Unit
T_{STG}	Storage temperature range	− 65 to +150	°C
T_J	Maximum junction temperature	125	

6.3 Operating conditions

6.3.1 General operating conditions

Table 17. General operating conditions

Symbol	Parameter	Conditions[1]		Min	Typ	Max	Unit
f_{HCLK}	Internal AHB clock frequency	Power Scale 3 (VOS[1:0] bits in PWR_CR register = 0x01), Regulator ON, over-drive OFF		0	-	144	MHz
		Power Scale 2 (VOS[1:0] bits in PWR_CR register = 0x10), Regulator ON	Over-drive OFF	0	-	168	
			Over-drive ON		-	180	
		Power Scale 1 (VOS[1:0] bits in PWR_CR register= 0x11), Regulator ON	Over-drive OFF	0	-	180	
			Over-drive ON		-	216[2]	
f_{PCLK1}	Internal APB1 clock frequency	Over-drive OFF		0	-	45	
		Over-drive ON		0	-	54	
f_{PCLK2}	Internal APB2 clock frequency	Over-drive OFF		0	-	90	
		Over-drive ON		0	-	108	
V_{DD}	Standard operating voltage	-		1.7[3]	-	3.6	V
V_{DDA}[4][5]	Analog operating voltage (ADC limited to 1.2 M samples)	Must be the same potential as V_{DD}[6]		1.7[3]	-	2.4	
	Analog operating voltage (ADC limited to 2.4 M samples)			2.4	-	3.6	
V_{DDUSB}	USB supply voltage (supply voltage for PA11,PA12, PB14 and PB15 pins)	USB not used		1.7	3.3	3.6	
		USB used		3.0	-	3.6	
V_{BAT}	Backup operating voltage	-		1.65	-	3.6	
$V_{DDSDMMC}$	SDMMC2 supply voltage (supply voltage for PG[12:9] and PD6 pins)	It can be different from VDD	-	1.7	-	3.6	
V_{DDDSI}	DSI system operating	-		1.7	-	3.6	

Table 17. General operating conditions (continued)

Symbol	Parameter	Conditions[1]	Min	Typ	Max	Unit
V_{12}	Regulator ON: 1.2 V internal voltage on V_{CAP_1}/V_{CAP_2} pins	Power Scale 3 ((VOS[1:0] bits in PWR_CR register = 0x01), 144 MHz HCLK max frequency	1.08	1.14	1.20	V
		Power Scale 2 ((VOS[1:0] bits in PWR_CR register = 0x10), 168 MHz HCLK max frequency with over-drive OFF or 180 MHz with over-drive ON	1.20	1.26	1.32	
		Power Scale 1 ((VOS[1:0] bits in PWR_CR register = 0x11), 180 MHz HCLK max frequency with over-drive OFF or 216 MHz with over-drive ON	1.26	1.32	1.40	
	Regulator OFF: 1.2 V external voltage must be supplied from external regulator on V_{CAP_1}/V_{CAP_2} pins[7]	Max frequency 144 MHz	1.10	1.14	1.20	
		Max frequency 168MHz	1.20	1.26	1.32	
		Max frequency 180 MHz	1.26	1.32	1.38	
V_{IN}	Input voltage on RST and FT pins[8]	2 V ≤V_{DD} ≤3.6 V	− 0.3	-	5.5	
		V_{DD} ≤2 V	− 0.3	-	5.2	
	Input voltage on TTa pins	-	− 0.3	-	V_{DDA}+ 0.3	
	Input voltage on BOOT pin	-	0	-	9	
P_D	Power dissipation at T_A = 85 °C for suffix 6 or T_A = 105 °C for suffix 7[9]	LQFP100	-	-	465	mW
		WLCSP180	-	-	641	
		LQFP144	-	-	500	
		LQFP176	-	-	526	
		UFBGA176	-	-	513	
		LQFP208	-	-	1053	
		TFBGA216	-	-	690	
		TFBGA100	-	-	552	
T_A	Ambient temperature for 6 suffix version	Maximum power dissipation	− 40	-	85	°C
		Low power dissipation[10]	− 40	-	105	
	Ambient temperature for 7 suffix version	Maximum power dissipation	− 40	-	105	°C
		Low power dissipation[10]	− 40	-	125	
T_J	Junction temperature range	6 suffix version	− 40	-	105	°C
		7 suffix version	− 40	-	125	

1. The over-drive mode is not supported at the voltage ranges from 1.7 to 2.1 V.
2. 216 MHz maximum frequency for 6 suffix version (200 MHz maximum frequency for 7 suffix version).
3. V_{DD}/V_{DDA} minimum value of 1.7 V is obtained with the use of an external power supply supervisor (refer to *Section 3.18.2: Internal reset OFF*).
4. When the ADC is used, refer to *Table 72: ADC characteristics*.
5. If V_{REF+} pin is present, it must respect the following condition: V_{DDA}-V_{REF+} < 1.2 V.

6. It is recommended to power V_{DD} and V_{DDA} from the same source. A maximum difference of 300 mV between V_{DD} and V_{DDA} can be tolerated during power-up and power-down operation.
7. The over-drive mode is not supported when the internal regulator is OFF.
8. To sustain a voltage higher than VDD+0.3, the internal Pull-up and Pull-Down resistors must be disabled
9. If T_A is lower, higher P_D values are allowed as long as T_J does not exceed T_{Jmax}.
10. In low power dissipation state, T_A can be extended to this range as long as T_J does not exceed T_{Jmax}.

Table 18. Limitations depending on the operating power supply range

Operating power supply range	ADC operation	Maximum Flash memory access frequency with no wait states ($f_{Flashmax}$)	Maximum HCLK frequency vs Flash memory wait states (1)(2)	I/O operation	Possible Flash memory operations
V_{DD} =1.7 to 2.1 V(3)	Conversion time up to 1.2 Msps	20 MHz	180 MHz with 8 wait states and over-drive OFF	No I/O compensation	8-bit erase and program operations only
V_{DD} = 2.1 to 2.4 V	Conversion time up to 1.2 Msps	22 MHz	216 MHz with 9 wait states and over-drive ON	No I/O compensation	16-bit erase and program operations
V_{DD} = 2.4 to 2.7 V	Conversion time up to 2.4 Msps	24 MHz	216 MHz with 8 wait states and over-drive ON	I/O compensation works	16-bit erase and program operations
V_{DD} = 2.7 to 3.6 V(4)	Conversion time up to 2.4 Msps	30 MHz	216 MHz with 6 wait states and over-drive ON	I/O compensation works	32-bit erase and program operations

1. Applicable only when the code is executed from Flash memory. When the code is executed from RAM, no wait state is required.
2. Thanks to the ART accelerator on ITCM interface and L1-cache on AXI interface, the number of wait states given here does not impact the execution speed from Flash memory since the ART accelerator or L1-cache allows to achieve a performance equivalent to 0-wait state program execution.
3. V_{DD}/V_{DDA} minimum value of 1.7 V is obtained with the use of an external power supply supervisor (refer to *Section 3.18.2: Internal reset OFF*).
4. The voltage range for USB full speed PHYs can drop down to 2.7 V. However the electrical characteristics of D- and D+ pins are degraded between 2.7 and 3 V.

6.3.2 VCAP1/VCAP2 external capacitor

Stabilization for the main regulator is achieved by connecting an external capacitor C_{EXT} to the VCAP1/VCAP2 pins. C_{EXT} is specified in *Table 19*.

Figure 27. External capacitor C_{EXT}

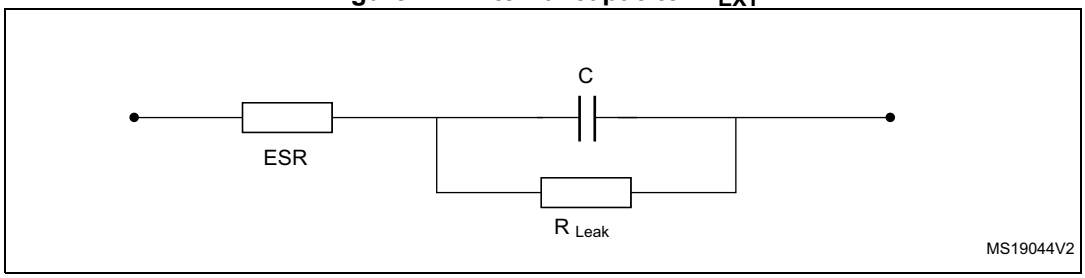

1. Legend: ESR is the equivalent series resistance.

Table 19. VCAP1/VCAP2 operating conditions(1)

Symbol	Parameter	Conditions
CEXT	Capacitance of external capacitor	2.2 µF
ESR	ESR of external capacitor	< 2 Ω

1. When bypassing the voltage regulator, the two 2.2 µF V_{CAP} capacitors are not required and should be replaced by two 100 nF decoupling capacitors.

6.3.3 Operating conditions at power-up / power-down (regulator ON)

Subject to general operating conditions for T_A.

Table 20. Operating conditions at power-up / power-down (regulator ON)

Symbol	Parameter	Min	Max	Unit
t_{VDD}	V_{DD} rise time rate	20	∞	µs/V
	V_{DD} fall time rate	20	∞	

6.3.4 Operating conditions at power-up / power-down (regulator OFF)

Subject to general operating conditions for T_A.

Table 21. Operating conditions at power-up / power-down (regulator OFF)(1)

Symbol	Parameter	Conditions	Min	Max	Unit
t_{VDD}	V_{DD} rise time rate	Power-up	20	∞	µs/V
	V_{DD} fall time rate	Power-down	20	∞	
t_{VCAP}	V_{CAP_1} and V_{CAP_2} rise time rate	Power-up	20	∞	
	V_{CAP_1} and V_{CAP_2} fall time rate	Power-down	20	∞	

1. To reset the internal logic at power-down, a reset must be applied on pin PA0 when V_{DD} reach below 1.08 V.

6.3.5 Reset and power control block characteristics

The parameters given in *Table 22* are derived from tests performed under ambient temperature and V_{DD} supply voltage conditions summarized in *Table 17*.

Table 22. Reset and power control block characteristics

Symbol	Parameter	Conditions	Min	Typ	Max	Unit
V_{PVD}	Programmable voltage detector level selection	PLS[2:0]=000 (rising edge)	2.09	2.14	2.19	V
		PLS[2:0]=000 (falling edge)	1.98	2.04	2.08	V
		PLS[2:0]=001 (rising edge)	2.23	2.30	2.37	V
		PLS[2:0]=001 (falling edge)	2.13	2.19	2.25	V
		PLS[2:0]=010 (rising edge)	2.39	2.45	2.51	V
		PLS[2:0]=010 (falling edge)	2.29	2.35	2.39	V
		PLS[2:0]=011 (rising edge)	2.54	2.60	2.65	V
		PLS[2:0]=011 (falling edge)	2.44	2.51	2.56	V
		PLS[2:0]=100 (rising edge)	2.70	2.76	2.82	V
		PLS[2:0]=100 (falling edge)	2.59	2.66	2.71	V
		PLS[2:0]=101 (rising edge)	2.86	2.93	2.99	V
		PLS[2:0]=101 (falling edge)	2.75	2.84	2.92	V
		PLS[2:0]=110 (rising edge)	2.96	3.03	3.10	V
		PLS[2:0]=110 (falling edge)	2.85	2.93	2.99	V
		PLS[2:0]=111 (rising edge)	3.07	3.14	3.21	V
		PLS[2:0]=111 (falling edge)	2.95	3.03	3.09	V
$V_{PVDhyst}$(1)	PVD hysteresis	-	-	100	-	mV
$V_{POR/PDR}$	Power-on/power-down reset threshold	Falling edge	1.60	1.68	1.76	V
		Rising edge	1.64	1.72	1.80	V
$V_{PDRhyst}$(1)	PDR hysteresis	-	-	40	-	mV
V_{BOR1}	Brownout level 1 threshold	Falling edge	2.13	2.19	2.24	V
		Rising edge	2.23	2.29	2.33	V
V_{BOR2}	Brownout level 2 threshold	Falling edge	2.44	2.50	2.56	V
		Rising edge	2.53	2.59	2.63	V
V_{BOR3}	Brownout level 3 threshold	Falling edge	2.75	2.83	2.88	V
		Rising edge	2.85	2.92	2.97	V
$V_{BORhyst}$(1)	BOR hysteresis	-	-	100	-	mV
$T_{RSTTEMPO}$(1)(2)	POR reset temporization	-	0.5	1.5	3.0	ms
I_{RUSH}(1)	InRush current on voltage regulator power-on (POR or wakeup from Standby)	-	-	160	250	mA
E_{RUSH}(1)	InRush energy on voltage regulator power-on (POR or wakeup from Standby)	V_{DD} = 1.7 V, T_A = 105 °C, I_{RUSH} = 171 mA for 31 µs	-	-	5.4	µC

1. Guaranteed by design.
2. The reset temporization is measured from the power-on (POR reset or wakeup from V_{BAT}) to the instant when first instruction is read by the user application code.

6.3.6 Over-drive switching characteristics

When the over-drive mode switches from enabled to disabled or disabled to enabled, the system clock is stalled during the internal voltage set-up.

The over-drive switching characteristics are given in *Table 23*. They are subject to general operating conditions for T_A.

Table 23. Over-drive switching characteristics(1)

Symbol	Parameter	Conditions	Min	Typ	Max	Unit
Tod_swen	Over_drive switch enable time	HSI	-	45	-	µs
		HSE max for 4 MHz and min for 26 MHz	45	-	100	
		External HSE 50 MHz	-	40	-	
Tod_swdis	Over_drive switch disable time	HSI	-	20	-	
		HSE max for 4 MHz and min for 26 MHz.	20	-	80	
		External HSE 50 MHz	-	15	-	

1. Guaranteed by design.

6.3.7 Supply current characteristics

The current consumption is a function of several parameters and factors such as the operating voltage, ambient temperature, I/O pin loading, device software configuration, operating frequencies, I/O pin switching rate, program location in memory and executed binary code.

The current consumption is measured as described in *Figure 26: Current consumption measurement scheme*.

All the run-mode current consumption measurements given in this section are performed with a reduced code that gives a consumption equivalent to CoreMark code.

Typical and maximum current consumption

The MCU is placed under the following conditions:

- All I/O pins are in input mode with a static value at V_{DD} or V_{SS} (no load).
- All peripherals are disabled except if it is explicitly mentioned.
- The Flash memory access time is adjusted both to f_{HCLK} frequency and V_{DD} range (see *Table 18: Limitations depending on the operating power supply range*).
- When the regulator is ON, the voltage scaling and over-drive mode are adjusted to f_{HCLK} frequency as follows:
  - Scale 3 for $f_{HCLK} \leq$ 144 MHz
  - Scale 2 for 144 MHz < $f_{HCLK} \leq$ 168 MHz
  - Scale 1 for 168 MHz < $f_{HCLK} \leq$ 216 MHz. The over-drive is only ON at 216 MHz.
- When the regulator is OFF, the V12 is provided externally as described in *Table 17: General operating conditions*:
- The system clock is HCLK, $f_{PCLK1} = f_{HCLK}/4$, and $f_{PCLK2} = f_{HCLK}/2$.
- External clock frequency is 25 MHz and PLL is ON when f_{HCLK} is higher than 25 MHz.
- The typical current consumption values are obtained for 1.7 V ≤ V_{DD} ≤ 3.6 V voltage range and for T_A= 25 °C unless otherwise specified.
- The maximum values are obtained for 1.7 V ≤ V_{DD} ≤ 3.6 V voltage range and a maximum ambient temperature (T_A) unless otherwise specified.
- For the voltage range 1.7 V ≤ V_{DD} ≤ 3.6 V, the maximum frequency is 180 MHz.

Table 24. Typical and maximum current consumption in Run mode, code with data processing running from ITCM RAM, regulator ON

Symbol	Parameter	Conditions	f_{HCLK} (MHz)	Typ	Max(1)			Unit
					T_A = 25 °C	T_A = 85 °C	T_A = 105 °C	
I_{DD}	Supply current in RUN mode	All peripherals enabled(2)(3)	216	193	221(4)	258(4)	-	mA
			200	179	207	244	279	
			180	159	176(4)	210(4)	238(4)	
			168	142	156	187	211	
			144	122	135	167	190	
			60	49	55	81	103	
			25	23	28	54	76	
		All peripherals disabled(3)	216	95	107(4)	153(4)	-	
			200	88	100	146	180	
			180	78	88(4)	122(4)	147(4)	
			168	70	78	109	133	
			144	60	68	99	123	
			60	24	29	55	76	
			25	12	16	42	63	

1. Guaranteed by characterization results, unless otherwise specified.

2. When analog peripheral blocks such as ADCs, DACs, HSE, LSE, HSI, or LSI are ON, an additional power consumption should be considered.
3. When the ADC is ON (ADON bit set in the ADC_CR2 register), add an additional power consumption of 1.73 mA per ADC for the analog part.
4. Guaranteed by test in production.

Table 25. Typical and maximum current consumption in Run mode, code with data processing running from flash memory (Single bank mode, ART ON except prefetch / L1-cache ON) or SRAM on AXI (L1-cache ON), regulator ON

Symbol	Parameter	Conditions	f_{HCLK} (MHz)	Typ	Max(1)			Unit
					T_A = 25 °C	T_A = 85 °C	T_A = 105 °C	
I_{DD}	Supply current in RUN mode	All peripherals enabled(2)(3)	216	190	219	255	-	mA
			200	177	205	241	268	
			180	157	173	208	228	
			168	139	153	185	204	
			144	107	117	144	161	
			60	48	54	81	98	
			25	23	28	54	71	
		All peripherals disabled(3)	216	92	104	150	-	
			200	86	97	143	170	
			180	76	85	119	140	
			168	67	75	107	126	
			144	52	58	84	101	
			60	23	28	54	71	
			25	11	15	42	56	

1. Guaranteed by characterization results.
2. When analog peripheral blocks such as ADCs, DACs, HSE, LSE, HSI, or LSI are ON, an additional power consumption should be considered.
3. When the ADC is ON (ADON bit set in the ADC_CR2 register), add an additional power consumption of 1.73 mA per ADC for the analog part.

Table 26. Typical and maximum current consumption in Run mode, code with data processing running from flash memory (Dual bank mode, ART ON except prefetch / L1-cache ON), regulator ON

Symbol	Parameter	Conditions	f_{HCLK} (MHz)	Typ	Max(1)			Unit
					T_A = 25 °C	T_A = 85 °C	T_A = 105 °C	
I_{DD}	Supply current in RUN mode	All peripherals enabled(2)(3)	216	190	219	255	-	mA
			200	177	204	242	268	
			180	157	173	208	228	
			168	139	153	185	204	
			144	107	117	144	161	
			60	48	54	81	98	
			25	23	28	54	71	
		All peripherals disabled(3)	216	92	104	150	-	
			200	86	97	143	170	
			180	76	85	119	140	
			168	67	75	107	126	
			144	52	58	84	101	
			60	23	28	54	71	
			25	11	15	42	59	

1. Guaranteed by characterization results.
2. When analog peripheral blocks such as ADCs, DACs, HSE, LSE, HSI, or LSI are ON, an additional power consumption should be considered.
3. When the ADC is ON (ADON bit set in the ADC_CR2 register), add an additional power consumption of 1.73 mA per ADC for the analog part.

Table 27. Typical and maximum current consumption in Run mode, code with data processing running from flash memory (Single bank mode) or SRAM on AXI (L1-cache disabled), regulator ON

Symbol	Parameter	Conditions	f_{HCLK} (MHz)	Typ	Max(1)			Unit
					TA= 25 °C	TA=85 °C	TA=105 °C	
I_{DD}	Supply current in RUN mode	All peripherals enabled(2)(3)	216	190	209	255	-	mA
			200	177	194	241	268	
			180	160	175	211	232	
			168	144	156	189	209	
			144	115	125	152	170	
			60	56	62	89	107	
			25	27	32	59	79	
		All peripherals disabled(3)	216	92	103	150	-	
			200	86	96	243	171	
			180	79	87	123	144	
			168	71	79	111	131	
			144	60	65	92	110	
			60	32	36	63	80	
			25	16	20	46	64	

1. Guaranteed by characterization results, unless otherwise specified.
2. When analog peripheral blocks such as ADCs, DACs, HSE, LSE, HSI, or LSI are ON, an additional power consumption should be considered.
3. When the ADC is ON (ADON bit set in the ADC_CR2 register), add an additional power consumption of 1.73 mA per ADC for the analog part.

Table 28. Typical and maximum current consumption in Run mode, code with data processing running from flash memory (Dual bank mode), regulator ON

Symbol	Parameter	Conditions	f_{HCLK} (MHz)	Typ	Max(1)			Unit
					TA= 25 °C	TA=85 °C	TA=105 °C	
I_{DD}	Supply current in RUN mode	All peripherals enabled(2)(3)	216	176	194	240	-	mA
			200	164	181	227	255	
			180	149	163	198	220	
			168	133	145	178	198	
			144	106	116	143	161	
			60	54	60	87	105	
			25	27	31	58	76	
		All peripherals disabled(3)	216	77	88	135	-	
			200	72	82	129	157	
			180	67	75	110	131	
			168	60	67	99	120	
			144	50	56	83	101	
			60	29	34	60	78	
			25	15	19	45	63	

1. Guaranteed by characterization results, unless otherwise specified.
2. When analog peripheral blocks such as ADCs, DACs, HSE, LSE, HSI, or LSI are ON, an additional power consumption should be considered.
3. When the ADC is ON (ADON bit set in the ADC_CR2 register), add an additional power consumption of 1.73 mA per ADC for the analog part.

Table 29. Typical and maximum current consumption in Run mode, code with data processing running from flash memory (Single bank mode) on ITCM interface (ART disabled), regulator ON

Symbol	Parameter	Conditions	f_{HCLK} (MHz)	Typ	Max(1)			Unit
					TA= 25 °C	TA=85 °C	TA=105 °C	
I_{DD}	Supply current in RUN mode	All peripherals enabled(2)(3)	216	215	242	281	-	mA
			200	200	218	265	293	
			180	185	200	237	258	
			168	166	179	213	233	
			144	134	144	172	190	
			60	61	68	95	112	
			25	29	34	61	78	
		All peripherals disabled(3)	216	118	129	177	-	
			200	110	120	168	196	
			180	104	113	149	170	
			168	94	102	135	155	
			144	79	85	113	130	
			60	37	42	69	86	
			25	18	22	48	66	

1. Guaranteed by characterization results, unless otherwise specified.
2. When analog peripheral blocks such as ADCs, DACs, HSE, LSE, HSI, or LSI are ON, an additional power consumption should be considered.
3. When the ADC is ON (ADON bit set in the ADC_CR2 register), add an additional power consumption of 1.73 mA per ADC for the analog part.

Table 30. Typical and maximum current consumption in Run mode, code with data processing running from flash memory (Dual bank mode) on ITCM interface (ART disabled), regulator ON

Symbol	Parameter	Conditions	f_{HCLK} (MHz)	Typ	Max(1)			Unit
					TA= 25 °C	TA=85 °C	TA=105 °C	
I_{DD}	Supply current in RUN mode	All peripherals enabled(2)(3)	216	191	218	255	-	mA
			200	178	195	241	269	
			180	164	179	214	236	
			168	147	160	192	212	
			144	121	130	157	175	
			60	60	66	93	111	
			25	28	33	59	77	
		All peripherals disabled(3)	216	93	104	150	-	
			200	87	97	144	171	
			180	83	92	126	148	
			168	75	82	114	134	
			144	65	71	97	115	
			60	35	40	66	84	
			25	16	20	47	64	

1. Guaranteed by characterization results, unless otherwise specified.
2. When analog peripheral blocks such as ADCs, DACs, HSE, LSE, HSI, or LSI are ON, an additional power consumption should be considered.
3. When the ADC is ON (ADON bit set in the ADC_CR2 register), add an additional power consumption of 1.73 mA per ADC for the analog part.

Table 31. Typical and maximum current consumption in Run mode, code with data processing running from flash memory (Single bank mode, ART ON except prefetch / L1-cache ON) or SRAM on AXI (L1-cache ON), regulator OFF

Symbol	Parameter	Conditions	f_{HCLK} (MHz)	Typ		Max(1)						Unit
						TA= 25 °C		TA= 85 °C		TA= 105 °C		
				IDD12	IDD	IDD12	IDD	IDD12	IDD	IDD12	IDD	
IDD12/ IDD	Supply current in RUN mode from V12 and VDD supply	All Peripherals Enabled(2)(3)	180	152	1	167	2	200	2	220	2	mA
			168	136	1	148	2	179	2	198	2	
			144	105	1	115	2	141	2	158	2	
			60	47	1	53	2	79	2	96	2	
			25	22	1	27	2	53	2	70	2	
		All Peripherals Disabled(3)	180	74	1	83	2	116	2	136	2	
			168	65	1	73	2	104	2	123	2	
			144	50	1	57	2	83	2	100	2	
			60	22	1	27	2	53	2	70	2	
			25	10	1	14	2	41	2	58	2	

1. Guaranteed by characterization results.
2. When analog peripheral blocks such as ADCs, DACs, HSE, LSE, HSI, or LSI are ON, an additional power consumption should be considered.
3. When the ADC is ON (ADON bit set in the ADC_CR2 register), add an additional power consumption of 1.73 mA per ADC for the analog part.

Table 32. Typical and maximum current consumption in Run mode, code with data processing running from flash memory (Dual bank mode, ART ON except prefetch / L1-cache ON) or SRAM on AXI (L1-cache ON), regulator OFF

Symbol	Parameter	Conditions	f_{HCLK} (MHz)	Typ		Max(1)						Unit
						TA= 25 °C		TA= 85 °C		TA= 105 °C		
				IDD12	IDD	IDD12	IDD	IDD12	IDD	IDD12	IDD	
IDD12/ IDD	Supply current in RUN mode from V12 and VDD supply	All Peripherals Enabled(2)(3)	180	152	1	167	2	200	2	220	2	mA
			168	136	1	148	2	179	2	198	2	
			144	105	1	115	2	141	2	158	2	
			60	47	1	53	2	79	2	96	2	
			25	22	1	27	2	53	2	70	2	
		All Peripherals Disabled(3)	180	74	1	82	2	114	2	137	2	
			168	65	1	73	2	104	2	123	2	
			144	50	1	57	2	83	2	100	2	
			60	22	1	27	2	53	2	70	2	
			25	10	1	14	2	41	2	58	2	

1. Guaranteed by characterization results.
2. When analog peripheral blocks such as ADCs, DACs, HSE, LSE, HSI, or LSI are ON, an additional power consumption should be considered.
3. When the ADC is ON (ADON bit set in the ADC_CR2 register), add an additional power consumption of 1.73 mA per ADC for the analog part.

Table 33. Typical and maximum current consumption in Sleep mode, regulator ON

Symbol	Parameter	Conditions	f_{HCLK} (MHz)	Typ	Max(1)			Unit
					T_A = 25 °C	T_A = 85 °C	T_A = 105 °C	
I_{DD}	Supply current in Sleep mode	All peripherals enabled(2)	216	128	144(3)	190(3)	-	mA
			200	119	134	180	214	
			180	105	118(3)	153(3)	178(3)	
			168	93	105	136	156	
			144	72	80	107	124	
			60	33	39	65	82	
			25	17	21	47	65	
		All peripherals disabled	216	18	25(3)	71(3)	-	
			200	17	24	70	112	
			180	14	20(3)	54(3)	75(3)	
			168	13	18	49	69	
			144	10	14	40	58	
			60	6	10	36	53	
			25	4	8	34	51	

1. Guaranteed by characterization results, unless otherwise specified.
2. When analog peripheral blocks such as ADCs, DACs, HSE, LSE, HSI, or LSI are ON, an additional power consumption should be considered.
3. Guaranteed by test in production.

Table 34. Typical and maximum current consumption in Sleep mode, regulator OFF

Symbol	Parameter	Conditions	f_{HCLK} (MHz)	Typ		Max(1)						Unit
						TA= 25 °C		TA= 85 °C		TA= 105 °C		
				IDD12	IDD	IDD12	IDD	IDD12	IDD	IDD12	IDD	
IDD12/ IDD	Supply current in RUN mode from V12 and V_{DD} supply	All Peripherals Enabled(2)	180	102	1	114	2	148	2	168	2	mA
			168	91	1	101	2	132	2	152	2	
			144	71	1	78	2	105	2	122	2	
			60	32	1	37	2	64	2	81	2	
			25	16	1	20	2	46	2	64	2	
		All Peripherals Disabled	180	13	1	18	2	53	2	73	2	
			168	12	1	16	2	47	2	67	2	
			144	9	1	13	2	39	2	56	2	
			60	5	1	9	2	35	2	52	2	
			25	3	1	7	2	33	2	50	2	

1. Guaranteed by characterization results, unless otherwise specified.
2. When analog peripheral blocks such as ADCs, DACs, HSE, LSE, HSI, or LSI are ON, an additional power consumption should be considered.

Table 35. Typical and maximum current consumptions in Stop mode

Symbol	Parameter	Conditions	Typ	Max(1)			Unit
				V_{DD} = 3.6 V			
			T_A = 25 °C	T_A = 25 °C	T_A = 85 °C	T_A = 105 °C	
$I_{DD_STOP_NM}$ (normal mode)	Supply current in Stop mode, main regulator in Run mode	Flash memory in Stop mode, all oscillators OFF, no IWDG	0.55	3	18	27	mA
		Flash memory in Deep power down mode, all oscillators OFF	0.5	3	18	27	
	Supply current in Stop mode, main regulator in Low-power mode	Flash memory in Stop mode, all oscillators OFF, no IWDG	0.42	2.5	15	24	
		Flash memory in Deep power down mode, all oscillators OFF, no IWDG	0.37	2.5	15	24	
$I_{DD_STOP_UDM}$ (under-drive mode)	Supply current in Stop mode, main regulator in Low voltage and under-drive modes	Regulator in Run mode, Flash memory in Deep power down mode, all oscillators OFF, no IWDG	0.18	1.2	6	10	
		Regulator in Low-power mode, Flash memory in Deep power down mode, all oscillators OFF, no IWDG	0.13	1.1	6	10	

1. Data based on characterization, tested in production.

Table 36. Typical and maximum current consumptions in Standby mode

Symbol	Parameter	Conditions	Typ(1)			Max(2)			Unit
			T_A = 25 °C			T_A = 25 °C	T_A = 85 °C	T_A = 105 °C	
			V_{DD} = 1.7 V	V_{DD}= 2.4 V	V_{DD} = 3.3 V	V_{DD} = 3.3 V			
I_{DD_STBY}	Supply current in Standby mode	Backup SRAM OFF, RTC and LSE OFF	1.1	1.9	2.4	5(3)	18(3)	38(3)	µA
		Backup SRAM ON, RTC and LSE OFF	1.9	2.7	3.2	6(3)	23(3)	48(3)	
		Backup SRAM OFF, RTC ON and LSE in low drive mode	1.7	2.7	3.5	7	26	55	
		Backup SRAM OFF, RTC ON and LSE in medium low drive mode	1.7	2.7	3.5	7	26	56	
		Backup SRAM OFF, RTC ON and LSE in medium high drive mode	1.8	2.8	3.6	8	28	57	
		Backup SRAM OFF, RTC ON and LSE in high drive mode	1.9	2.9	3.7	8	28	59	
		Backup SRAM ON, RTC ON and LSE in low drive mode	2.4	3.4	4.3	8	31	65	
		Backup SRAM ON, RTC ON and LSE in Medium low drive mode	2.4	3.5	4.3	8	31	65	
		Backup SRAM ON, RTC ON and LSE in Medium high drive mode	2.6	3.7	4.5	8	33	68	
		Backup SRAM ON, RTC ON and LSE in High drive mode	2.6	3.7	4.5	9	33	68	

1. The typical current consumption values are given with PDR OFF (internal reset OFF). When the PDR is OFF (internal reset OFF), the typical current consumption is reduced by additional 1.2 µA.
2. Guaranteed by characterization results, unless otherwise specified.
3. Guaranteed by test in production.

Table 37. Typical and maximum current consumptions in V_{BAT} mode

Symbol	Parameter	Conditions[1]	Typ			Max[2]		Unit
			T_A =25 °C			T_A =85 °C	T_A =105 °C	
			V_{BAT} = 1.7 V	V_{BAT}= 2.4 V	V_{BAT}= 3.3 V	V_{BAT} = 3.6 V		
I_{DD_VBAT}	Supply current in V_{BAT} mode	Backup SRAM OFF, RTC and LSE OFF	0.03	0.04	0.04	0.2	0.4	µA
		Backup SRAM ON, RTC and LSE OFF	0.77	0.78	0.83	3.2	7.4	
		Backup SRAM OFF, RTC ON and LSE in low drive mode	0.62	0.8	1.13	4.4	10.2	
		Backup SRAM OFF, RTC ON and LSE in medium low drive mode	0.65	0.83	1.17	4.6	10.6	
		Backup SRAM OFF, RTC ON and LSE in medium high drive mode	0.75	0.94	1.28	5.0	11.4	
		Backup SRAM OFF, RTC ON and LSE in high drive mode	0.9	1.08	1.43	5.5	12.8	
		Backup SRAM ON, RTC ON and LSE in low drive mode	1.35	1.54	1.91	7.3	17.2	
		Backup SRAM ON, RTC ON and LSE in Medium low drive mode	1.38	1.57	1.93	7.9	18.4	
		Backup SRAM ON, RTC ON and LSE in Medium high drive mode	1.53	1.73	2.11	8.0	18.7	
		Backup SRAM ON, RTC ON and LSE in High drive mode	1.67	1.87	2.26	9.0	21.0	

1. Crystal used: Abracon ABS07-120-32.768 kHz-T with a C_L of 6 pF for typical values.
2. Guaranteed by characterization results.

I/O system current consumption

The current consumption of the I/O system has two components: static and dynamic.

I/O static current consumption

All the I/Os used as inputs with pull resistors generate current consumption when the pin is externally held to the opposite level. The value of this current consumption can be simply computed by using the pull-up/pull-down resistors values given in *Table 66: I/O static characteristics*.

For the output pins, any external pull-down or external load must also be considered to estimate the current consumption.

An additional I/O current consumption is due to I/Os configured as inputs if an intermediate voltage level is externally applied. This current consumption is caused by the input Schmitt trigger circuits used to discriminate the input value. Unless this specific configuration is required by the application, this supply current consumption can be avoided by configuring

these I/Os in analog mode. This is notably the case of ADC input pins which should be configured as analog inputs.

Caution: Any floating input pin can also settle to an intermediate voltage level or switch inadvertently, as a result of external electromagnetic noise. To avoid a current consumption related to floating pins, they must either be configured in analog mode, or forced internally to a definite digital value. This can be done either by using pull-up/down resistors or by configuring the pins in output mode.

I/O dynamic current consumption

In addition to the internal peripheral current consumption (see *Table 39: Peripheral current consumption*), the I/Os used by an application also contribute to the current consumption. When an I/O pin switches, it uses the current from the MCU supply voltage to supply the I/O pin circuitry and to charge/discharge the capacitive load (internal or external) connected to the pin:

$$I_{SW} = V_{DD} \times f_{SW} \times C$$

where

I_{SW} is the current sunk by a switching I/O to charge/discharge the capacitive load

V_{DD} is the MCU supply voltage

f_{SW} is the I/O switching frequency

C is the total capacitance seen by the I/O pin: $C = C_{INT} + C_{EXT}$

The test pin is configured in push-pull output mode and is toggled by software at a fixed frequency.

Table 38. Switching output I/O current consumption(1)

Symbol	Parameter	Conditions	I/O toggling frequency (fsw) MHz	Typ V_{DD} = 3.3 V	Typ V_{DD} = 1.8 V	Unit
I_{DDIO}	I/O switching Current	C_{EXT} = 0 pF $C = C_{INT} + C_S + C_{EXT}$	2	0.1	0.1	mA
			8	0.4	0.2	
			25	1.1	0.7	
			50	2.4	1.3	
			60	3.1	1.6	
			84	4.3	2.4	
			90	4.9	2.6	
			100	5.4	2.8	
		C_{EXT} = 10 pF $C = C_{INT} + C_S + C_{EXT}$	2	0.2	0.1	
			8	0.6	0.3	
			25	1.8	1.1	
			50	3.1	2.3	
			60	4.6	3.4	
			84	9.7	3.6	
			90	10.12	5.2	
			100	14.92	5.4	
I_{DDIO}	I/O switching Current	C_{EXT} = 22 pF $C = C_{INT} + C_S + C_{EXT}$	2	0.3	0.1	mA
			8	1.0	0.5	
			25	3.5	1.6	
			50	5.9	4.2	
			60	10.0	4.4	
			84	19.12	5.8	
			90	19.6	-	
		C_{EXT} = 33 pF $C = C_{INT} + C_S + C_{EXT}$	2	0.3	0.2	
			8	1.3	0.7	
			25	3.5	2.3	
			50	10.26	5.19	
			60	16.53	-	

1. CINT + $C_{S,}$ PCB board capacitance including the pad pin is estimated to15 pF.

On-chip peripheral current consumption

The MCU is placed under the following conditions:

- At startup, all I/O pins are in analog input configuration.
- All peripherals are disabled unless otherwise mentioned.
- I/O compensation cell enabled.
- The ART/L1-cache is ON.
- Scale 1 mode selected, internal digital voltage V12 = 1.32 V.
- HCLK is the system clock. $f_{PCLK1} = f_{HCLK}/4$, and $f_{PCLK2} = f_{HCLK}/2$.
  The given value is calculated by measuring the difference of current consumption
  - with all peripherals clocked off
  - with only one peripheral clocked on
  - f_{HCLK} = 216 MHz (Scale 1 + over-drive ON), f_{HCLK} = 168 MHz (Scale 2), f_{HCLK} = 144 MHz (Scale 3)
- Ambient operating temperature is 25 °C and V_{DD}=3.3 V.

Table 39. Peripheral current consumption

Peripheral		I_{DD}(Typ)(1)			Unit
		Scale 1	Scale 2	Scale 3	
AHB1 (up to 216 MHz)	GPIOA	2.9	2.8	2.2	µA/MHz
	GPIOB	3.0	2.9	2.2	
	GPIOC	2.9	2.8	2.2	
	GPIOD	3.1	3.0	2.3	
	GPIOE	3.1	3.0	2.3	
	GPIOF	2.9	2.8	2.2	
	GPIOG	2.9	2.8	2.2	
	GPIOH	3.1	3.1	2.4	
	GPIOI	3.0	2.9	2.2	
	GPIOJ	2.9	2.9	2.2	
	GPIOK	2.8	2.8	2.4	
	CRC	1.0	0.9	0.8	
	BKPSRAM	0.9	0.9	0.7	
	DMA1	3.17 x N + 11.63	3.08 x N + 11.39	2.6 x N + 9.64	
	DMA2	3.33 x N + 12.84	3.27 x N + 11.84	2.75 x N + 10.10	
	DMA2D	77.7	76.3	63.5	
	ETH_MAC ETH_MAC_TX ETH_MAC_RX ETH_MAC_PTP	40.1	39.5	32.8	
	OTG_HS	58.5	57.4	48.1	
	OTG_HS+ULPI	58.5	57.4	48.1	
AHB2 (up to 216 MHz)	DCMI	2.9	2.8	2.1	µA/MHz
	JPEG	74.8	73.4	61.9	
	CRYP	1.9	1.7	1.4	
	HASH	4.5	4.4	3.6	
	RNG	6.7	6.7	5.4	
	USB_OTG_FS	32.4	31.9	26.7	
AHB3 (up to 216 MHz)	FMC	18.6	18.2	15.1	µA/MHz
	QSPI	22.3	21.8	18.1	
Bus matrix(2)		3.94	3.25	2.12	µA/MHz

Table 39. Peripheral current consumption (continued)

Peripheral		I_{DD}(Typ)(1)			Unit
		Scale 1	Scale 2	Scale 3	
APB1 (up to 54 MHz)	TIM2	19.1	18.7	14.7	µA/MHz
	TIM3	14.6	14.0	10.6	
	TIM4	15.4	14.7	11.4	
	TIM5	18.1	17.6	13.6	
	TIM6	3.1	2.7	1.4	
	TIM7	3.0	2.7	1.1	
	TIM12	8.1	7.8	5.6	
	TIM13	5.4	5.1	3.1	
	TIM14	5.6	5.3	3.3	
	LPTIM1	9.8	9.6	6.9	
	WWDG	1.9	1.6	1,4	
	SPI2/I2S2(3)	3.0	2.9	1.4	
	SPI3/I2S3(3)	3.0	3.3	1.4	
	SPDIFRX	2.4	2.0	1.7	
	USART2	12.6	12.7	9.2	
	USART3	12.4	12.4	9.4	
	UART4	10.7	10.9	8.1	
	UART5	10.7	10.7	8.1	
	I2C1	8.9	8.9	6.4	
	I2C2	8.3	8.2	6.1	
	I2C3	8.1	8.2	6.1	
	I2C4	8.0	8.2	5.8	
	CAN1	6.3	6.4	4.4	
	CAN2	5.7	5.8	3.9	
	CAN3	7.4	7.1	5.6	
	HDMI-CEC	2.2	1.8	1.4	
	PWR	1.3	0.9	0.8	
	DAC(4)	4.8	4.2	3.6	
	UART7	10.4	10.4	7.8	
	UART8	11.1	11.3	8.3	

Table 39. Peripheral current consumption (continued)

Peripheral		I_{DD}(Typ)(1)			Unit
		Scale 1	Scale 2	Scale 3	
APB2 (up to 108 MHz)	TIM1	24.1	23.8	19.6	µA/MHz
	TIM8	24.5	24.2	20.0	
	USART1	17.7	17.4	14.3	
	USART6	11.9	11.8	9.4	
	ADC1(5)	4.5	4.7	3.5	
	ADC2(5)	4.5	4.7	3.3	
	ADC3(5)	4.5	4.6	3.3	
	SDMMC1	8.4	8.3	6.9	
	SDMMC2	8.2	8.2	6.4	
	SPI1/I2S1(3)	3.9	3.6	3.1	
	SPI4	3.9	3.6	3.1	
	SYSCFG	2.5	2.2	1.9	
	TIM9	8.0	8.0	6.2	
	TIM10	5.0	5.1	3.7	
	TIM11	6.9	6.9	5.3	
	SPI5	2.7	2.8	1.8	
	SPI6	3.1	3.2	2.2	
	SAI1	3.2	3.3	2.2	
	DFSDM1	10.9	10.7	9.0	
	SAI2	3.9	3.9	2.8	
	MDIO	7.1	7.0	5.8	
	LTDC	51.2	50.3	41.8	
	DSI	8.5	8.4	8.1	

1. When the I/O compensation cell is ON, I_{DD} typical value increases by 0.22 mA.
2. The BusMatrix is automatically active when at least one master is ON.
3. To enable an I2S peripheral, first set the I2SMOD bit and then the I2SE bit in the SPI_I2SCFGR register.
4. When the DAC is ON and EN1/2 bits are set in DAC_CR register, add an additional power consumption of 0.75 mA per DAC channel for the analog part.
5. When the ADC is ON (ADON bit set in the ADC_CR2 register), add an additional power consumption of 1.73 mA per ADC for the analog part.

6.3.8 Wakeup time from low-power modes

The wakeup times given in *Table 40* are measured starting from the wakeup event trigger up to the first instruction executed by the CPU:

- For Stop or Sleep modes: the wakeup event is WFE.
- WKUP (PA0) pin is used to wakeup from Standby, Stop and Sleep modes.

All timings are derived from tests performed under ambient temperature and V_{DD}=3.3 V.

Table 40. Low-power mode wakeup timings

Symbol	Parameter	Conditions	Typ(1)	Max(1)	Unit
$t_{WUSLEEP}$(2)	Wakeup from Sleep	-	13	13	CPU clock cycles
t_{WUSTOP}(2)	Wakeup from Stop mode with MR/LP regulator in normal mode	Main regulator is ON	14	14.9	µs
		Main regulator is ON and Flash memory in Deep power down mode	104.1	107.6	
		Low power regulator is ON	21.4	24.2	
		Low power regulator is ON and Flash memory in Deep power down mode	111.5	116.5	
t_{WUSTOP}(2)	Wakeup from Stop mode with MR/LP regulator in Under-drive mode	Main regulator in under-drive mode (Flash memory in Deep power-down mode)	107.4	113.2	
		Low power regulator in under-drive mode (Flash memory in Deep power-down mode)	112.7	120	
tWUSTDBY (2)	Wakeup from Standby mode	Exit Standby mode on rising edge	308	313	
		Exit Standby mode on falling edge	307	313	

1. Guaranteed by characterization results.
2. The wakeup times are measured from the wakeup event to the point in which the application code reads the first

6.3.9 External clock source characteristics

High-speed external user clock generated from an external source

In bypass mode the HSE oscillator is switched off and the input pin is a standard I/O. The external clock signal has to respect the *Table 66: I/O static characteristics*. However, the recommended clock input waveform is shown in *Figure 28*.

The characteristics given in *Table 41* result from tests performed using an high-speed external clock source, and under ambient temperature and supply voltage conditions summarized in *Table 17*.

Table 41. High-speed external user clock characteristics

Symbol	Parameter	Conditions	Min	Typ	Max	Unit
f_{HSE_ext}	External user clock source frequency(1)	-	1	-	50	MHz
V_{HSEH}	OSC_IN input pin high level voltage		$0.7V_{DD}$	-	V_{DD}	V
V_{HSEL}	OSC_IN input pin low level voltage		V_{SS}	-	$0.3V_{DD}$	
$t_{w(HSE)}$ $t_{w(HSE)}$	OSC_IN high or low time(1)		5	-	-	ns
$t_{r(HSE)}$ $t_{f(HSE)}$	OSC_IN rise or fall time(1)		-	-	10	
$C_{in(HSE)}$	OSC_IN input capacitance(1)	-	-	5	-	pF
$DuCy_{(HSE)}$	Duty cycle	-	45	-	55	%
I_L	OSC_IN Input leakage current	$V_{SS} \leq V_{IN} \leq V_{DD}$	-	-	±1	µA

1. Guaranteed by design.

Low-speed external user clock generated from an external source

In bypass mode the LSE oscillator is switched off and the input pin is a standard I/O. The external clock signal has to respect the *Table 66: I/O static characteristics*. However, the recommended clock input waveform is shown in *Figure 29*.

The characteristics given in *Table 42* result from tests performed using an low-speed external clock source, and under ambient temperature and supply voltage conditions summarized in *Table 17*.

Table 42. Low-speed external user clock characteristics

Symbol	Parameter	Conditions	Min	Typ	Max	Unit
f_{LSE_ext}	User External clock source frequency(1)	-	-	32.768	1000	kHz
V_{LSEH}	OSC32_IN input pin high level voltage		$0.7V_{DD}$	-	V_{DD}	V
V_{LSEL}	OSC32_IN input pin low level voltage		V_{SS}	-	$0.3V_{DD}$	
$t_{w(LSE)}$ $t_{f(LSE)}$	OSC32_IN high or low time(1)		450	-	-	ns
$t_{r(LSE)}$ $t_{f(LSE)}$	OSC32_IN rise or fall time(1)		-	-	50	
$C_{in(LSE)}$	OSC32_IN input capacitance(1)	-	-	5	-	pF
$DuCy_{(LSE)}$	Duty cycle	-	30	-	70	%
I_L	OSC32_IN Input leakage current	$V_{SS} \leq V_{IN} \leq V_{DD}$	-	-	±1	µA

1. Guaranteed by design.

Figure 28. High-speed external clock source AC timing diagram

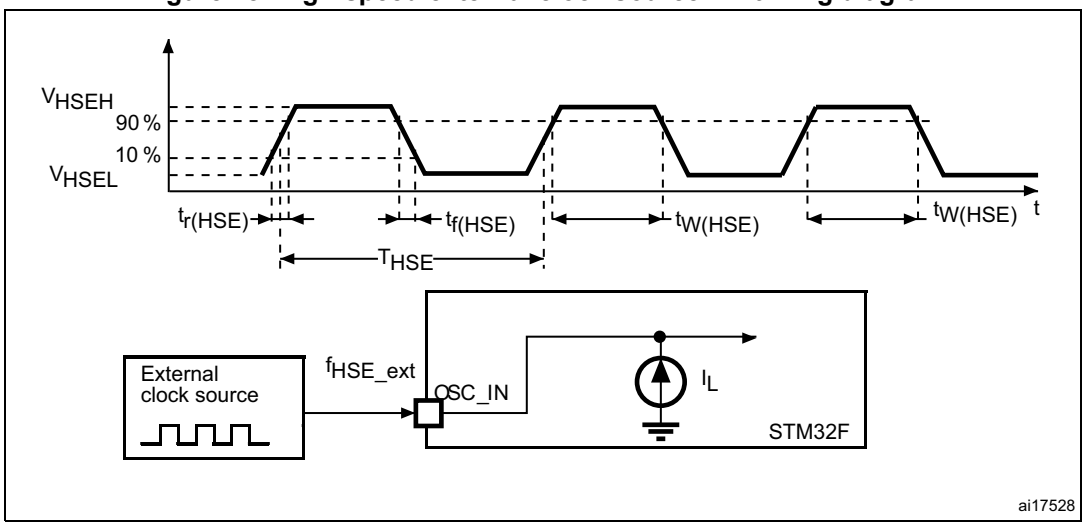

Figure 29. Low-speed external clock source AC timing diagram

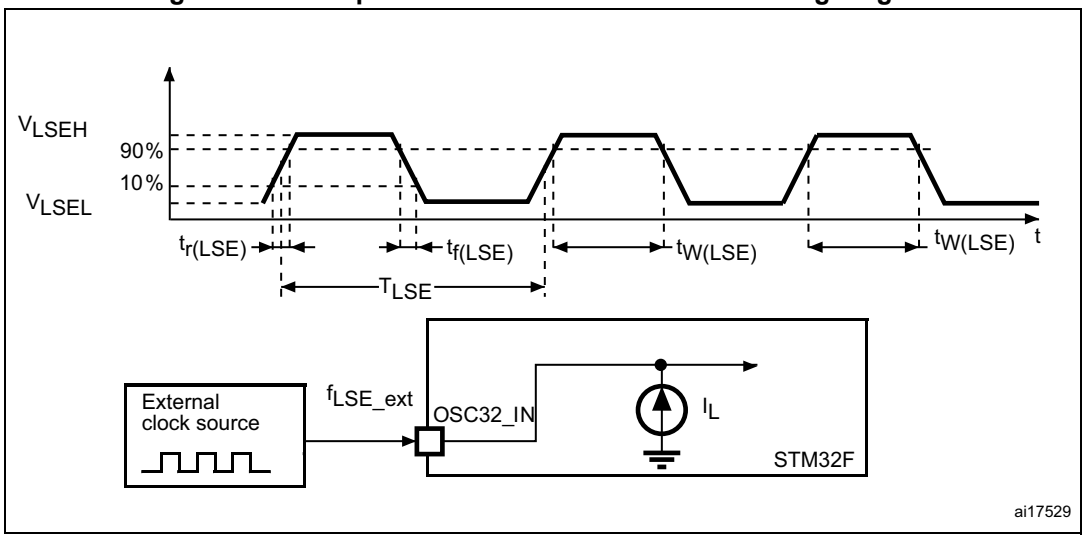

High-speed external clock generated from a crystal/ceramic resonator

The high-speed external (HSE) clock can be supplied with a 4 to 26 MHz crystal/ceramic resonator oscillator. All the information given in this paragraph are based on characterization results obtained with typical external components specified in *Table 43*. In the application, the resonator and the load capacitors have to be placed as close as possible to the oscillator pins in order to minimize output distortion and startup stabilization time. Refer to the crystal resonator manufacturer for more details on the resonator characteristics (frequency, package, accuracy).

Table 43. HSE 4-26 MHz oscillator characteristics(1)

Symbol	Parameter	Conditions	Min	Typ	Max	Unit
f_{OSC_IN}	Oscillator frequency	-	4	-	26	MHz
R_F	Feedback resistor	-	-	200	-	kΩ
I_{DD}	HSE current consumption	V_{DD}=3.3 V, ESR= 30 Ω, C_L=5 pF@25 MHz	-	450	-	µA
		V_{DD}=3.3 V, ESR= 30 Ω, C_L=10 pF@25 MHz	-	530	-	
ACC_{HSE}(2)	HSE accuracy	-	− 500	-	500	ppm
G_m_crit_max	Maximum critical crystal g_m	Startup	-	-	1	mA/V
$t_{SU(HSE}$(3)	Startup time	V_{DD} is stabilized	-	2	-	ms

1. Guaranteed by design.
2. This parameter depends on the crystal used in the application. The minimum and maximum values must be respected to comply with USB standard specifications.
3. $t_{SU(HSE)}$ is the startup time measured from the moment it is enabled (by software) to a stabilized 8 MHz oscillation is reached. This value is guaranteed by characterization results. It is measured for a standard crystal resonator and it can vary significantly with the crystal manufacturer.

Note: For information on selecting the crystal, refer to the application note AN2867 "Oscillator design guide for STM8AF/AL/S, STM32 MCUs and MPUs" available from the ST website www.st.com.

Figure 30. Typical application with an 8 MHz crystal

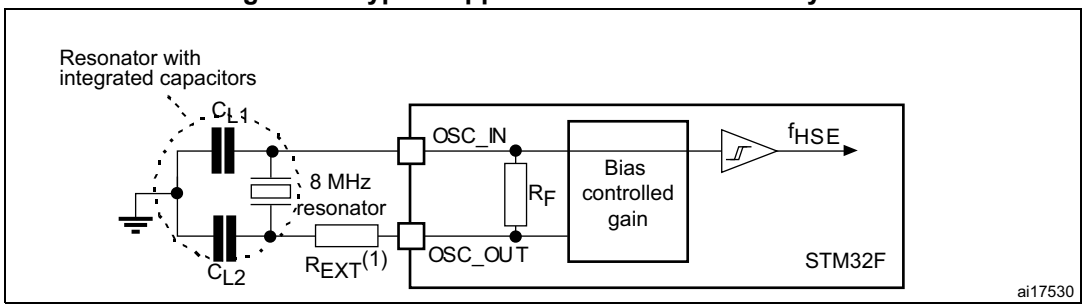

1. R_{EXT} value depends on the crystal characteristics.

Low-speed external clock generated from a crystal/ceramic resonator

The low-speed external (LSE) clock can be supplied with a 32.768 kHz crystal/ceramic resonator oscillator. All the information given in this paragraph are based on characterization results obtained with typical external components specified in *Table 44*. In the application, the resonator and the load capacitors have to be placed as close as possible to the oscillator pins in order to minimize output distortion and startup stabilization time. Refer to the crystal resonator manufacturer for more details on the resonator characteristics (frequency, package, accuracy).

Table 44. LSE oscillator characteristics (f_{LSE} = 32.768 kHz) (1)

Symbol	Parameter	Conditions	Min	Typ	Max	Unit
I_{DD}	LSE current consumption	LSEDRV[1:0]=00 Low drive capability	-	250	-	nA
		LSEDRV[1:0]=10 Medium low drive capability	-	300	-	
		LSEDRV[1:0]=01 Medium high drive capability	-	370	-	
		LSEDRV[1:0]=11 High drive capability	-	480	-	
G_m_crit_max	Maximum critical crystal g_m	LSEDRV[1:0]=00 Low drive capability	-	-	0.48	µA/V
		LSEDRV[1:0]=10 Medium low drive capability	-	-	0.75	
		LSEDRV[1:0]=01 Medium high drive capability	-	-	1.7	
		LSEDRV[1:0]=11 High drive capability	-	-	2.7	
t_{SU}(2)	start-up time	V_{DD} is stabilized	-	2	-	s

1. Guaranteed by design.

2. Guaranteed by characterization results. t_{SU} is the start-up time measured from the moment it is enabled (by software) to a stabilized 32.768 kHz oscillation is reached. This value is measured for a standard crystal resonator and it can vary significantly with the crystal manufacturer.

Note: For information on selecting the crystal, refer to the application note AN2867 "Oscillator design guide for STM8AF/AL/S, STM32 MCUs and MPUs" available from the ST website www.st.com.

Figure 31. Typical application with a 32.768 kHz crystal

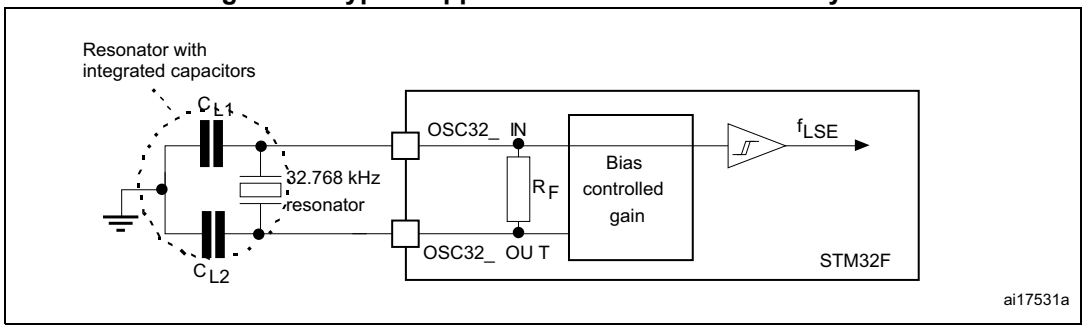

6.3.10 Internal clock source characteristics

The parameters given in *Table 45* and *Table 46* are derived from tests performed under ambient temperature and V_{DD} supply voltage conditions summarized in *Table 17*.

High-speed internal (HSI) RC oscillator

Table 45. HSI oscillator characteristics (1)

Symbol	Parameter	Conditions	Min	Typ	Max	Unit
f_{HSI}	Frequency	-	-	16	-	MHz
ACC_{HSI}	HSI user trimming step(2)	-	-	-	1	%
	Accuracy of the HSI oscillator	T_A = –40 to 105 °C(3)	− 8	-	4.5	%
		T_A = –10 to 85 °C(3)	− 4	-	4	%
		T_A = 25 °C(4)	− 1	-	1	%
$t_{su(HSI)}$(2)	HSI oscillator startup time	-	-	2.2	4	µs
$I_{DD(HSI)}$(2)	HSI oscillator power consumption	-	-	60	80	µA

1. V_{DD} = 3.3 V, PLL OFF, T_A = –40 to 125 °C unless otherwise specified.
2. Guaranteed by design.
3. Guaranteed by characterization results.
4. Factory calibrated, parts not soldered.

Figure 32. ACCHSI versus temperature

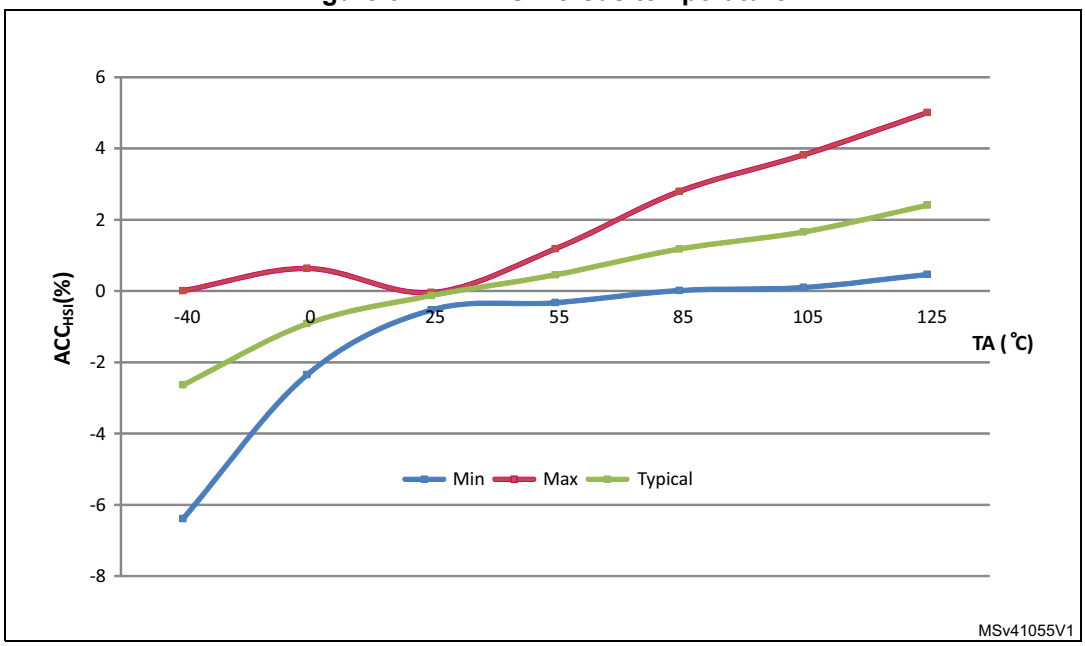

1. Guaranteed by characterization results.

Low-speed internal (LSI) RC oscillator

Table 46. LSI oscillator characteristics (1)

Symbol	Parameter	Min	Typ	Max	Unit
f_{LSI}(2)	Frequency	17	32	47	kHz
$t_{su(LSI)}$(3)	LSI oscillator startup time	-	15	40	µs
$I_{DD(LSI)}$(3)	LSI oscillator power consumption	-	0.4	0.6	µA

1. V_{DD} = 3 V, T_A = –40 to 105 °C unless otherwise specified.
2. Guaranteed by characterization results.
3. Guaranteed by design.

Figure 33. LSI deviation versus temperature

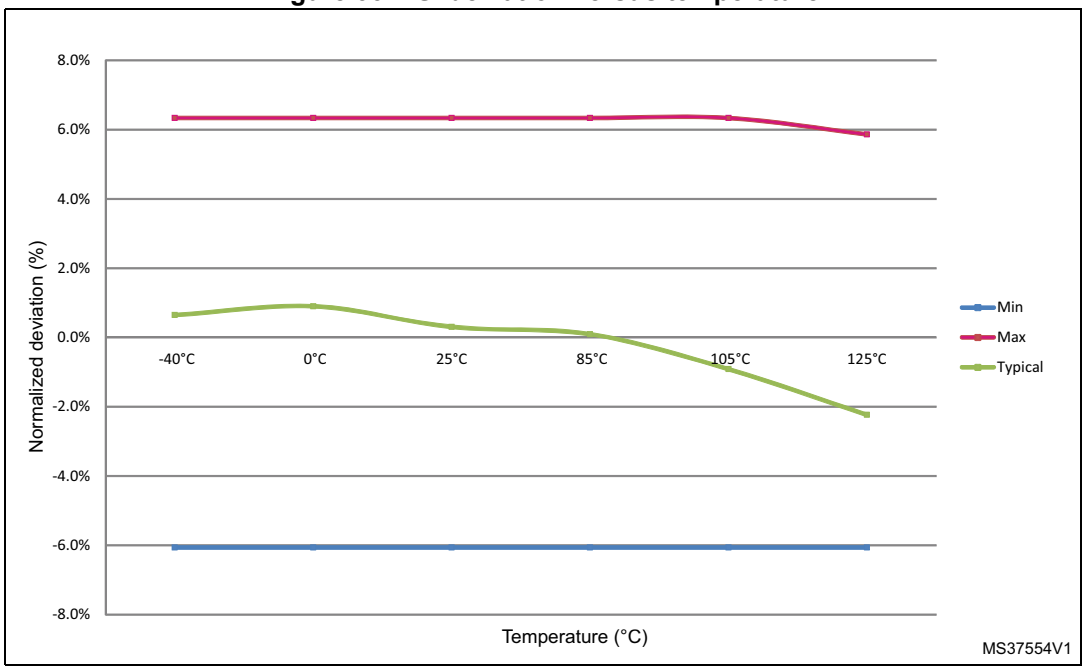

6.3.11 PLL characteristics

The parameters given in *Table 47* and *Table 48* are derived from tests performed under temperature and V_{DD} supply voltage conditions summarized in *Table 17*.

Table 47. Main PLL characteristics

Symbol	Parameter	Conditions		Min	Typ	Max	Unit
f_{PLL_IN}	PLL input clock(1)	-		0.95(2)	1	2.10	MHz
f_{PLL_OUT}	PLL multiplier output clock	-		24	-	216	MHz
f_{PLL48_OUT}	48 MHz PLL multiplier output clock	-		-	48	75	MHz
f_{VCO_OUT}	PLL VCO output	-		100	-	432	MHz
t_{LOCK}	PLL lock time	VCO freq = 192 MHz		75	-	200	µs
		VCO freq = 432 MHz		100	-	300	µs
Jitter(3)	Cycle-to-cycle jitter	System clock 216 MHz	RMS	-	25	-	ps
			peak to peak	-	±150	-	ps
	Period Jitter		RMS	-	15	-	ps
			peak to peak	-	±200	-	ps
	Main clock output (MCO) for RMII Ethernet	Cycle to cycle at 50 MHz on 1000 samples		-	32	-	ps
	Main clock output (MCO) for MII Ethernet	Cycle to cycle at 25 MHz on 1000 samples		-	40	-	ps
	Bit Time CAN jitter	Cycle to cycle at 1 MHz on 1000 samples		-	330	-	ps
$I_{DD(PLL)}$(4)	PLL power consumption on V_{DD}	VCO freq = 192 MHz VCO freq = 432 MHz		0.15 0.45	-	0.40 0.75	mA
$I_{DDA(PLL)}$(4)	PLL power consumption on V_{DDA}	VCO freq = 192 MHz VCO freq = 432 MHz		0.30 0.55	-	0.40 0.85	mA

1. Take care of using the appropriate division factor M to obtain the specified PLL input clock values. The M factor is shared between PLL and PLLI2S.
2. Guaranteed by design.
3. The use of 2 PLLs in parallel could degraded the Jitter up to +30%.
4. Guaranteed by characterization results.

Table 48. PLLI2S characteristics

Symbol	Parameter	Conditions		Min	Typ	Max	Unit
f_{PLLI2S_IN}	PLLI2S input clock(1)	-		0.95(2)	1	2.10	MHz
$f_{PLLI2SP_OUT}$	PLLI2S multiplier output clock for SPDIFRX	-		-	-	216	
$f_{PLLI2SQ_OUT}$	PLLI2S multiplier output clock for SAI	-		-	-	216	
$f_{PLLI2SR_OUT}$	PLLI2S multiplier output clock for I2S	-		-	-	216	
f_{VCO_OUT}	PLLI2S VCO output	-		100	-	432	
t_{LOCK}	PLLI2S lock time	VCO freq = 192 MHz		75	-	200	µs
		VCO freq = 432 MHz		100	-	300	
Jitter(3)	Master I2S clock jitter	Cycle to cycle at 12.288 MHz on 48KHz period, N=432, R=5	RMS	-	90	-	-
			peak to peak	-	±280	-	ps
		Average frequency of 12.288 MHz N = 432, R = 5 on 1000 samples		-	90	-	ps
	WS I2S clock jitter	Cycle to cycle at 48 KHz on 1000 samples		-	400	-	ps
$I_{DD(PLLI2S)}$(4)	PLLI2S power consumption on V_{DD}	VCO freq = 192 MHz VCO freq = 432 MHz		0.15 0.45	-	0.40 0.75	mA
$I_{DDA(PLLI2S)}$(4)	PLLI2S power consumption on V_{DDA}	VCO freq = 192 MHz VCO freq = 432 MHz		0.30 0.55	-	0.40 0.85	mA

1. Take care of using the appropriate division factor M to have the specified PLL input clock values.
2. Guaranteed by design.
3. Value given with main PLL running.
4. Guaranteed by characterization results.

Table 49. PLLISAI characteristics

Symbol	Parameter	Conditions	Min	Typ	Max	Unit
f_{PLLSAI_IN}	PLLSAI input clock(1)	-	0.95(2)	1	2.10	MHz
$f_{PLLSAIP_OUT}$	PLLSAI multiplier output clock for 48 MHz	-	-	48	75	
$f_{PLLSAIQ_OUT}$	PLLSAI multiplier output clock for SAI	-	-	-	216	
$f_{PLLSAIR_OUT}$	PLLSAI multiplier output clock for LCD-TFT	-	-	-	216	
f_{VCO_OUT}	PLLSAI VCO output	-	100	-	432	

Table 49. PLLISAI characteristics (continued)

Symbol	Parameter	Conditions		Min	Typ	Max	Unit
t_{LOCK}	PLLSAI lock time	VCO freq = 192 MHz		75	-	200	µs
		VCO freq = 432 MHz		100	-	300	
Jitter(3)	Master SAI clock jitter	Cycle to cycle at 12.288 MHz on 48KHz period, N=432, R=5	RMS	-	90	-	-
			peak to peak	-	±280	-	ps
		Average frequency of 12.288 MHz N = 432, R = 5 on 1000 samples		-	90	-	ps
	FS clock jitter	Cycle to cycle at 48 KHz on 1000 samples		-	400	-	ps
$I_{DD(PLLSAI)}$(4)	PLLSAI power consumption on V_{DD}	VCO freq = 192 MHz VCO freq = 432 MHz		0.15 0.45	-	0.40 0.75	mA
$I_{DDA(PLLSAI)}$(4)	PLLSAI power consumption on V_{DDA}	VCO freq = 192 MHz VCO freq = 432 MHz		0.30 0.55	-	0.40 0.85	mA

1. Take care of using the appropriate division factor M to have the specified PLL input clock values.
2. Guaranteed by design.
3. Value given with main PLL running.
4. Guaranteed by characterization results.

6.3.12 PLL spread spectrum clock generation (SSCG) characteristics

The spread spectrum clock generation (SSCG) feature allows to reduce electromagnetic interferences (see *Table 62: EMI characteristics for fHSE= 8 MHz and fCPU= 200MHz (Setting 2)*). It is available only on the main PLL.

Table 50. SSCG parameters constraint

Symbol	Parameter	Min	Typ	Max(1)	Unit
f_{Mod}	Modulation frequency	-	-	10	KHz
md	Peak modulation depth	0.25	-	2	%
MODEPER * INCSTEP	-	-	-	$2^{15} - 1$	-

1. Guaranteed by design.

Equation 1

The frequency modulation period (MODEPER) is given by the equation below:

$$MODEPER = round[f_{PLL_IN} / (4 \times f_{Mod})]$$

f_{PLL_IN} and f_{Mod} must be expressed in Hz.

As an example:

If f_{PLL_IN} = 1 MHz, and f_{MOD} = 1 kHz, the modulation depth (MODEPER) is given by equation 1:

$$MODEPER = round[10^6 / (4 \times 10^3)] = 250$$

Equation 2

Equation 2 allows to calculate the increment step (INCSTEP):

$$INCSTEP = round[((2^{15} - 1) \times md \times PLLN) / (100 \times 5 \times MODEPER)]$$

f_{VCO_OUT} must be expressed in MHz.

With a modulation depth (md) = ±2 % (4 % peak to peak), and PLLN = 240 (in MHz):

$$INCSTEP = round[((2^{15} - 1) \times 2 \times 240) / (100 \times 5 \times 250)] = 126 md(quantitazed)\%$$

An amplitude quantization error may be generated because the linear modulation profile is obtained by taking the quantized values (rounded to the nearest integer) of MODPER and INCSTEP. As a result, the achieved modulation depth is quantized. The percentage quantized modulation depth is given by the following formula:

$$md_{quantized}\% = (MODEPER \times INCSTEP \times 100 \times 5) / ((2^{15} - 1) \times PLLN)$$

As a result:

$$md_{quantized}\% = (250 \times 126 \times 100 \times 5) / ((2^{15} - 1) \times 240) = 2.002\%(peak)$$

Figure 34 and *Figure 35* show the main PLL output clock waveforms in center spread and down spread modes, where:

F0 is f_{PLL_OUT} nominal.

T_{mode} is the modulation period.

md is the modulation depth.

Figure 34. PLL output clock waveforms in center spread mode

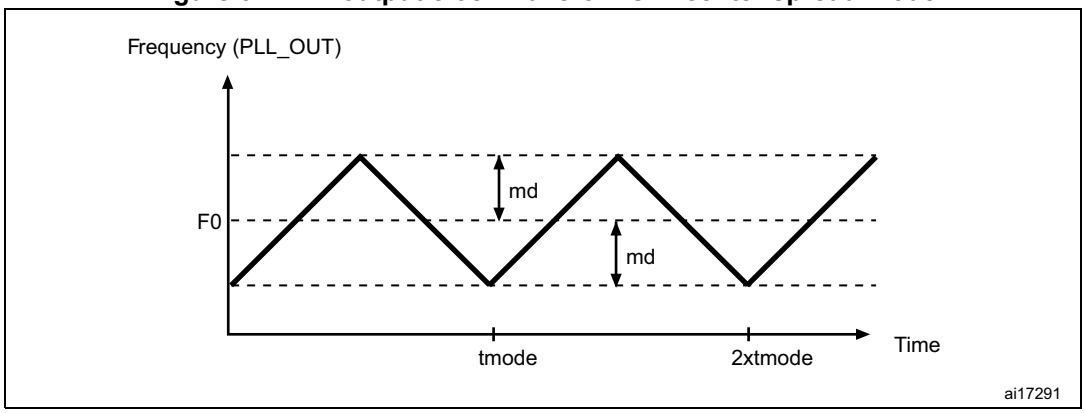

Figure 35. PLL output clock waveforms in down spread mode

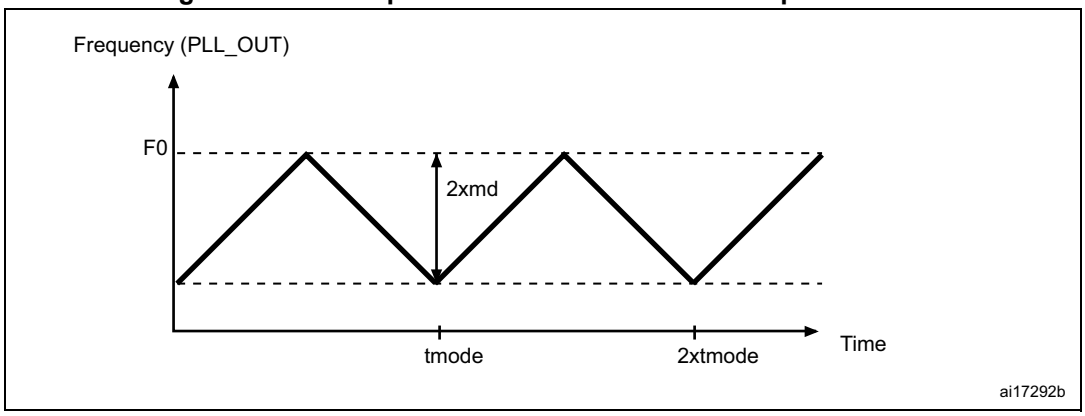

6.3.13 MIPI D-PHY characteristics

The parameters given in *Table 51* and *Table 52* are derived from tests performed under temperature and V_{DD} supply voltage conditions summarized in *Table 17*.

Table 51. MIPI D-PHY characteristics(1)

Symbol	Parameter	Conditions	Min	Typ	Max	Unit
Hi-Speed Input/Output Characteristics						
U_{INST}	UI instantaneous	-	2	-	12.5	ns
V_{CMTX}	HS transmit common mode voltage	-	150	200	250	mV
$\|\Delta V_{CMTX}\|$	V_{CMTX} mismatch when output is Differential-1 or Differential-0	-	-	-	5	mV
$\|V_{OD}\|$	HS transmit differential voltage	-	140	200	270	mV
$\|\Delta V_{OD}\|$	V_{OD} mismatch when output is Differential-1 or Differential-0	-	-	-	14	mV
V_{OHHS}	HS output high voltage	-	-	-	360	mV
Z_{OS}	Single ended output impedance	-	40	50	62.5	Ω
ΔZ_{OS}	Single ended output impedance mismatch	-	-	-	10	%
t_{HSr} & t_{HSf}	20%-80% rise and fall time	-	100	-	0.35*UI	ps
LP Receiver Input Characteristics						
V_{IL}	Logic 0 input voltage (not in ULP State)	-	-	-	550	mV
$V_{IL-ULPS}$	Logic 0 input voltage in ULP State	-	-	-	300	mV
V_{IH}	Input high level voltage	-	880	-	-	mV
V_{hys}	Voltage hysteresis	-	25	-	-	mV
LP Emitter Output Characteristics						

Table 51. MIPI D-PHY characteristics(1) (continued)

Symbol	Parameter	Conditions	Min	Typ	Max	Unit
V_{OH}	Output high level voltage	-	1.1	1.2	1.2	V
V_{OL}	Output low level voltage	-	-50	-	50	mV
Z_{OLP}	Output impedance of LP transmitter	-	110	-	-	Ω
T_{RLP}/T_{FLP}	15%-85% rise and fall time	-	-	-	25	ns
LP Contention Detector Characteristics						
V_{ILCD}	Logic 0 contention threshold	-	-	-	200	mV
V_{IHCD}	Logic 0 contention threshold	-	450	-	-	

1. Guaranteed based on test during characterization.

Table 52. MIPI D-PHY AC characteristics LP mode and HS/LP transitions(1)

Symbol	Parameter	Conditions	Min	Typ	Max	Unit
T_{LPX}	Transmitted length of any Low-Power state period	-	50	-	-	ns
$T_{CLK-PREPARE}$	Time that the transmitter drives the Clock Lane LP-00 Line state immediately before the HS-0 Line state starting the HS transmission.	-	38	-	95	
$T_{CLK-PREPARE}$ + $T_{CLK-ZERO}$	Time that the transmitter drives the HS-0 state prior to starting the clock.	-	300	-	-	
$T_{CLK-PRE}$	Time that the HS clock shall be driven by the transmitter prior to any associated Data Lane beginning the transition from LP to HS mode.	-	8	-	-	UI

Table 52. MIPI D-PHY AC characteristics LP mode and HS/LP transitions(1) (continued)

Symbol	Parameter	Conditions	Min	Typ	Max	Unit
$T_{CLK-POST}$	Time that the transmitter continues to send HS clock after the last associated Data Lane has transitioned to LP Mode.	-	62+52*UI	-	-	ns
$T_{CLK-TRAIL}$	Time that the transmitter drives the HS-0 state after the last payload clock bit of an HS transmission burst.	-	60	-	-	
$T_{HS-PREPARE}$	Time that the transmitter drives the Data Lane LP-00 Line state immediately before the HS-0 Line state starting the HS transmission.	-	40+4*UI	-	85+6*UI	
$T_{HS-PREPARE}$ + $T_{HS-ZERO}$	$T_{HS-PREPARE+}$ Time that the transmitter drives the HS-0 state prior to transmitting the Sync sequence.	-	145+10*UI	-	-	
$T_{HS-TRAIL}$	Time that the transmitter drives the flipped differential state after last payload data bit of a HS transmission burst.	-	Max (n*8*UI, 60+n*4*UI)	-	-	
$T_{HS-EXIT}$	Time that the transmitter drives LP-11 following a HS burst.	-	100	-	-	
T_{REOT}	30%-85% rise time and fall time	-	-	-	35	
T_{EOT}	Transmitted time interval from the start of $T_{HS-TRAIL}$ or $T_{CLK-TRAIL}$, to the start of the LP-11 state following a HS burst.	-	-	-	105+ n*12UI	

1. Guaranteed based on test during characterization.

Figure 36. MIPI D-PHY HS/LP clock lane transition timing diagram

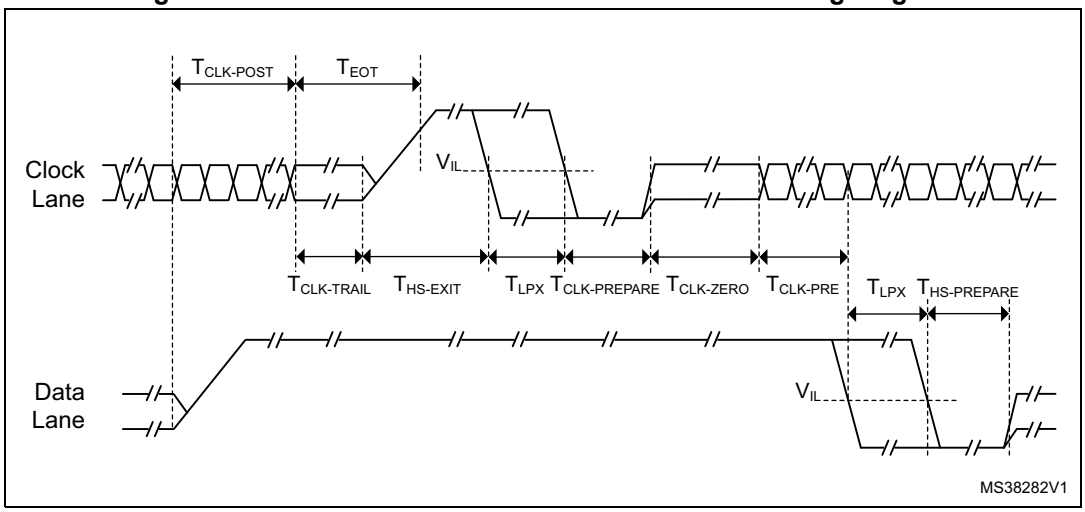

Figure 37. MIPI D-PHY HS/LP data lane transition timing diagram

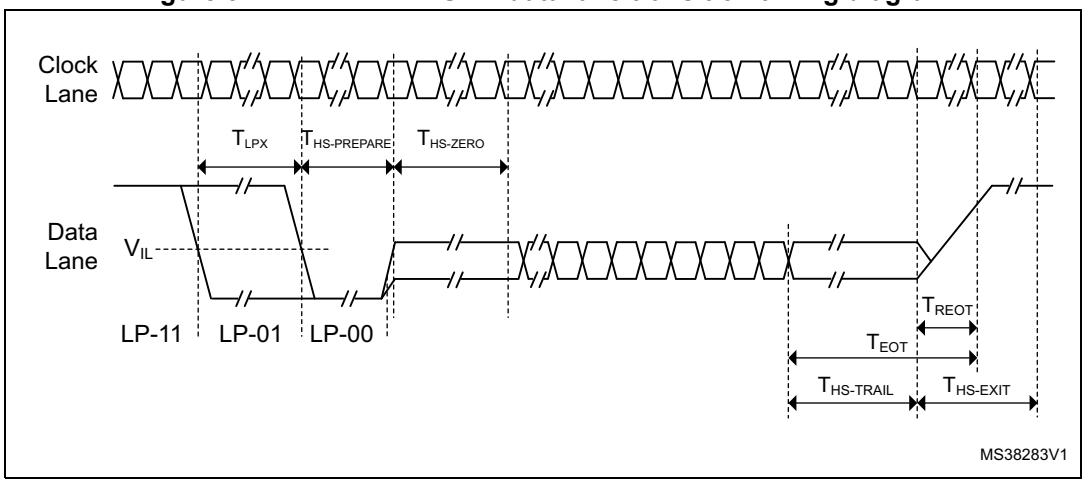

6.3.14 MIPI D-PHY PLL characteristics

The parameters given in *Table 53* are derived from tests performed under temperature and V_{DD} supply voltage conditions summarized in *Table 17*.

Table 53. DSI-PLL characteristics(1)

Symbol	Parameter	Conditions	Min	Typ	Max	Unit
f_{PLL_IN}	PLL input clock	-	4	-	100	MHz
f_{PLL_INFIN}	PFD input clock	-	4	-	25	
f_{PLL_OUT}	PLL multiplier output clock	-	31.25	-	500	
f_{VCO_OUT}	PLL VCO output	-	500	-	1000	
t_{LOCK}	PLL lock time	-	-	-	200	µs

Table 53. DSI-PLL characteristics(1) (continued)

Symbol	Parameter	Conditions	Min	Typ	Max	Unit
$I_{DD(PLL)}$	PLL power consumption on V_{DD12}	f_{VCO_OUT} = 500 MHz	-	0.55	0.70	mA
		f_{VCO_OUT} = 600 MHz	-	0.65	0.80	
		f_{VCO_OUT} = 1000 MHz	-	0.95	1.20	

1. Based on test during characterization.

6.3.15 MIPI D-PHY regulator characteristics

The parameters given in *Table 54* are derived from tests performed under temperature and V_{DD} supply voltage conditions summarized in *Table 17*.

Table 54. DSI regulator characteristics(1)

Symbol	Parameter	Conditions	Min	Typ	Max	Unit
$V_{DD12DSI}$	1.2 V internal voltage on $V_{DD12DSI}$	-	1.15	1.20	1.30	V
C_{EXT}	External capacitor on V_{CAPDSI}	-	1.1	2.2	3.3	µF
ESR	External Serial Resistor	-	0	25	600	mΩ
$I_{DDDSIREG}$	Regulator power consumption	-	100	120	125	µA
I_{DDDSI}	DSI system (regulator, PLL and D-PHY) current consumption on V_{DDDSI}	Ultra Low Power Mode (Reg. ON + PLL OFF)	-	290	600	µA
		Stop State (Reg. ON + PLL OFF)	-	290	600	
$I_{DDDSILP}$	DSI system current consumption on V_{DDDSI} in LP mode communication(2)	10 MHz escape clock (Reg. ON + PLL OFF)	-	4.3	5.0	mA
		20 MHz escape clock (Reg. ON + PLL OFF)	-	4.3	5.0	
$I_{DDDSIHS}$	DSI system (regulator, PLL and D-PHY) current consumption on V_{DDDSI} in HS mode communication(3)	300 Mbps - 1 data lane (Reg. ON + PLL ON)	-	8.0	8.8	mA
		300 Mbps - 2data lane (Reg. ON + PLL ON)	-	11.4	12.5	
		500 Mbps - 1 data lane (Reg. ON + PLL ON)	-	13.5	14.7	
		500 Mbps - 2data lane (Reg. ON + PLL ON)	-	18.0	19.6	
	DSI system (regulator, PLL and D-PHY) current consumption on V_{DDDSI} in HS mode with CLK like payload	500 Mbps - 2data lane (Reg. ON + PLL ON)	-	21.4	23.3	
t_{WAKEUP}	Startup delay	C_{EXT} = 2.2 µF	-	110	-	µs
		C_{EXT} = 3.3 µF	-	-	160	
I_{INRUSH}	Inrush current on V_{DDDSI}	External capacitor load at start	-	60	200	mA

1. Based on test during characterization.
2. Values based on an average traffic in LP Command Mode.
3. Values based on an average traffic (3/4 HS traffic & 1/4 LP) in Video Mode.

6.3.16 Memory characteristics

Flash memory

The characteristics are given at TA = –40 to 105 °C unless otherwise specified.

The devices are shipped to customers with the Flash memory erased.

Table 55. Flash memory characteristics

Symbol	Parameter	Conditions	Min	Typ	Max	Unit
I_{DD}	Supply current	Write / Erase 8-bit mode, V_{DD} = 1.7 V	-	14	-	mA
		Write / Erase 16-bit mode, V_{DD} = 2.1 V	-	17	-	
		Write / Erase 32-bit mode, V_{DD} = 3.3 V	-	24	-	

Table 56. Flash memory programming (single bank configuration nDBANK=1)

Symbol	Parameter	Conditions	Min(1)	Typ	Max(1)	Unit
t_{prog}	Word programming time	Program/erase parallelism (PSIZE) = x 8/16/32	-	16	100(2)	µs
$t_{ERASE32KB}$	Sector (32 KB) erase time	Program/erase parallelism (PSIZE) = x 8	-	400	800	ms
		Program/erase parallelism (PSIZE) = x 16	-	250	600	
		Program/erase parallelism (PSIZE) = x 32	-	200	500	
$t_{ERASE128KB}$	Sector (128 KB) erase time	Program/erase parallelism (PSIZE) = x 8	-	1100	2400	ms
		Program/erase parallelism (PSIZE) = x 16	-	800	1400	
		Program/erase parallelism (PSIZE) = x 32	-	500	1100	
$t_{ERASE256KB}$	Sector (256 KB) erase time	Program/erase parallelism (PSIZE) = x 8	-	2.1	4	s
		Program/erase parallelism (PSIZE) = x 16	-	1.5	2.6	
		Program/erase parallelism (PSIZE) = x 32	-	1	2	
t_{ME}	Mass erase time	Program/erase parallelism (PSIZE) = x 8	-	16	32	s
		Program/erase parallelism (PSIZE) = x 16	-	11	22	
		Program/erase parallelism (PSIZE) = x 32	-	8	16	

Table 56. Flash memory programming (single bank configuration nDBANK=1) (continued)

Symbol	Parameter	Conditions	Min(1)	Typ	Max(1)	Unit
V_{prog}	Programming voltage	32-bit program operation	2.7	-	3.6	V
		16-bit program operation	2.1	-	3.6	V
		8-bit program operation	1.7	-	3.6	V

1. Guaranteed by characterization results.
2. The maximum programming time is measured after 100K erase operations.

Table 57. Flash memory programming (dual bank configuration nDBANK=0)

Symbol	Parameter	Conditions	Min(1)	Typ	Max(1)	Unit
t_{prog}	Word programming time	Program/erase parallelism (PSIZE) = x 8/16/32	-	16	100(2)	µs
$t_{ERASE16KB}$	Sector (16 KB) erase time	Program/erase parallelism (PSIZE) = x 8	-	400	800	ms
		Program/erase parallelism (PSIZE) = x 16	-	250	600	
		Program/erase parallelism (PSIZE) = x 32	-	200	500	
$t_{ERASE64KB}$	Sector (64 KB) erase time	Program/erase parallelism (PSIZE) = x 8	-	1100	2400	ms
		Program/erase parallelism (PSIZE) = x 16	-	800	1400	
		Program/erase parallelism (PSIZE) = x 32	-	500	1100	
$t_{ERASE128KB}$	Sector (128 KB) erase time	Program/erase parallelism (PSIZE) = x 8	-	2.1	4	s
		Program/erase parallelism (PSIZE) = x 16	-	1.5	2.6	
		Program/erase parallelism (PSIZE) = x 32	-	1	2	
t_{ME}	Mass erase time	Program/erase parallelism (PSIZE) = x 8	-	16	32	s
		Program/erase parallelism (PSIZE) = x 16	-	11	22	
		Program/erase parallelism (PSIZE) = x 32	-	8	16	

Table 57. Flash memory programming (dual bank configuration nDBANK=0) (continued)

Symbol	Parameter	Conditions	Min(1)	Typ	Max(1)	Unit
t_{BE}	Bank erase time	Program/erase parallelism (PSIZE) = x 8	-	16	32	s
		Program/erase parallelism (PSIZE) = x 16	-	11	22	
		Program/erase parallelism (PSIZE) = x 32	-	8	16	
V_{prog}	Programming voltage	32-bit program operation	2.7	-	3.6	V
		16-bit program operation	2.1	-	3.6	V
		8-bit program operation	1.7	-	3.6	V

1. Guaranteed by characterization results.
2. The maximum programming time is measured after 100K erase operations.

Table 58. Flash memory programming with V_{PP}

Symbol	Parameter	Conditions	Min(1)	Typ	Max(1)	Unit
t_{prog}	Double word programming	T_A = 0 to +40 °C V_{DD} = 3.3 V V_{PP} = 8.5 V	-	16	100(2)	µs
$t_{ERASE32KB}$	Sector (32 KB) erase time		-	180	-	ms
$t_{ERASE128KB}$	Sector (128 KB) erase time		-	450	-	
$t_{ERASE256KB}$	Sector (256 KB) erase time		-	900	-	
t_{ME}	Mass erase time		-	6.9	-	s
V_{prog}	Programming voltage	-	2.7	-	3.6	V
V_{PP}	V_{PP} voltage range	-	7	-	9	V
I_{PP}	Minimum current sunk on the V_{PP} pin	-	10	-	-	mA
t_{VPP}(3)	Cumulative time during which V_{PP} is applied	-	-	-	1	hour

1. Guaranteed by design.
2. The maximum programming time is measured after 100K erase operations.
3. V_{PP} should only be connected during programming/erasing.

Table 59. Flash memory endurance and data retention

Symbol	Parameter	Conditions	Value	Unit
			Min(1)	
N_{END}	Endurance	T_A = –40 to +85 °C (6 suffix versions) T_A = –40 to +105 °C (7 suffix versions)	10	kcycles
t_{RET}	Data retention	1 kcycle(2) at T_A = 85 °C	30	Years
		1 kcycle(2) at T_A = 105 °C	10	
		10 kcycles(2) at T_A = 55 °C	20	

1. Guaranteed by characterization results.
2. Cycling performed over the whole temperature range.

6.3.17 EMC characteristics

Susceptibility tests are performed on a sample basis during device characterization.

Functional EMS (electromagnetic susceptibility)

While a simple application is executed on the device (toggling 2 LEDs through I/O ports). the device is stressed by two electromagnetic events until a failure occurs. The failure is indicated by the LEDs:

- **Electrostatic discharge (ESD)** (positive and negative) is applied to all device pins until a functional disturbance occurs. This test is compliant with the IEC 61000-4-2 standard.
- **FTB**: A burst of fast transient voltage (positive and negative) is applied to V_{DD} and V_{SS} through a 100 pF capacitor, until a functional disturbance occurs. This test is compliant with the IEC 61000-4-4 standard.

A device reset allows normal operations to be resumed.

The test results are given in *Table 60*. They are based on the EMS levels and classes defined in application note AN1709.

Table 60. EMS characteristics

Symbol	Parameter	Conditions	Level/ Class
V_{FESD}	Voltage limits to be applied on any I/O pin to induce a functional disturbance	V_{DD} = 3.3 V, T_A = +25 °C, f_{HCLK} = 216 MHz, conforms to IEC 61000-4-2	2B
V_{FTB}	Fast transient voltage burst limits to be applied through 100 pF on V_{DD} and V_{SS} pins to induce a functional disturbance	V_{DD} = 3.3 V, T_A =+25 °C, f_{HCLK} = 168 MHz, conforms to IEC 61000-4-2	5A

As a consequence, it is recommended to add a serial resistor (1 kΩ) located as close as possible to the MCU to the pins exposed to noise (connected to tracks longer than 50 mm on PCB).

Designing hardened software to avoid noise problems

EMC characterization and optimization are performed at component level with a typical application environment and simplified MCU software. It should be noted that good EMC performance is highly dependent on the user application and the software in particular.

Therefore it is recommended that the user applies EMC software optimization and prequalification tests in relation with the EMC level requested for his application.

Software recommendations

The software flowchart must include the management of runaway conditions such as:

- Corrupted program counter
- Unexpected reset
- Critical Data corruption (control registers...)

Prequalification trials

Most of the common failures (unexpected reset and program counter corruption) can be reproduced by manually forcing a low state on the NRST pin or the Oscillator pins for 1 second.

To complete these trials, ESD stress can be applied directly on the device, over the range of specification values. When unexpected behavior is detected, the software can be hardened to prevent unrecoverable errors occurring (see application note AN1015).

Electromagnetic Interference (EMI)

The electromagnetic field emitted by the device are monitored while a simple application, executing EEMBC code, is running. This emission test is compliant with SAE IEC61967-2 standard which specifies the test board and the pin loading.

Table 61. EMI characteristics for f_{HSE}= 8 MHz and f_{CPU}= 200MHz (Setting 1)

Symbol	Parameter	Conditions	Monitored frequency band	Max vs. [f_{HSE}/f_{CPU}]	Unit
				8/200 MHz	
S_{EMI}	Peak (1)	V_{DD} = 3.6 V, T_A = 25 °C, TFBGA216 package, conforming to IEC61967-2 ART/L1-cache ON, over-drive ON, all peripheral clocks enabled, clock dithering disabled.	0.1 to 30 MHz	5	dBµV
			30 to 130 MHz	10	
			130 MHz to 1 GHz	18	
			1 GHz to 2 GHz	10	
	Level(2)		0.1 to 2 GHz	3.5	-

1. Refer to the “EMI radiated test” in AN1709.
2. Refer to the “EMI level classification” in AN1709.

Table 62. EMI characteristics for f_{HSE}= 8 MHz and f_{CPU}= 200MHz (Setting 2)

Symbol	Parameter	Conditions	Monitored frequency band	Max vs. [f_{HSE}/f_{CPU}]	Unit
				8/200 MHz	
S_{EMI}	Peak (1)	V_{DD} = 3.6 V, T_A = 25 °C, TFBGA216 package, conforming to IEC61967-2 ART/L1-cache ON, over-drive ON, all peripheral clocks enabled, clock dithering enabled.	0.1 to 30 MHz	2	dBµV
			30 to 130 MHz	9	
			130 MHz to 1 GHz	14	
			1 GHz to 2 GHz	9	
	Level(2)		0.1 to 2 GHz	3	-

1. Refer to the “EMI radiated test” in AN1709.
2. Refer to the “EMI level classification” in AN1709.

6.3.18 Absolute maximum ratings (electrical sensitivity)

Based on three different tests (ESD, LU) using specific measurement methods, the device is stressed in order to determine its performance in terms of electrical sensitivity.

Electrostatic discharge (ESD)

Electrostatic discharges (a positive then a negative pulse separated by 1 second) are applied to the pins of each sample according to each pin combination. The sample size depends on the number of supply pins in the device (3 parts × (n+1) supply pins). This test conforms to the ANSI/ESDA/JEDEC JS-001-2012 and ANSI/ESD S5.3.1-2009 standards.

Table 63. ESD absolute maximum ratings

Symbol	Ratings	Conditions	Class	Maximum value(1)	Unit
$V_{ESD(HBM)}$	Electrostatic discharge voltage (human body model)	T_A = +25 °C conforming to ANSI/ESDA/JEDEC JS-001-2012	2	2000	V
$V_{ESD(CDM)}$	Electrostatic discharge voltage (charge device model)	T_A = +25 °C conforming to ANSI/ESD S5.3.1-2009, all packages except TFBGA100	3	250	
		T_A = +25 °C conforming to ANSI/ESD S5.3.1-2009, TFBGA100 package	4	500	

1. Guaranteed by characterization results.

Static latchup

Two complementary static tests are required on six parts to assess the latchup performance:

- A supply overvoltage is applied to each power supply pin
- A current injection is applied to each input, output and configurable I/O pin

These tests are compliant with EIA/JESD 78A IC latchup standard.

Table 64. Electrical sensitivities

Symbol	Parameter	Conditions	Class
LU	Static latch-up class	T_A = +105 °C conforming to JESD78A	II level A

6.3.19 I/O current injection characteristics

As a general rule, a current injection to the I/O pins, due to external voltage below V_{SS} or above V_{DD} (for standard, 3 V-capable I/O pins) should be avoided during the normal product operation. However, in order to give an indication of the robustness of the microcontroller in cases when an abnormal injection accidentally happens, susceptibility tests are performed on a sample basis during the device characterization.

Functional susceptibilty to I/O current injection

While a simple application is executed on the device, the device is stressed by injecting current into the I/O pins programmed in floating input mode. While current is injected into the I/O pin, one at a time, the device is checked for functional failures.

The failure is indicated by an out of range parameter: ADC error above a certain limit (>5 LSB TUE), out of conventional limits of induced leakage current on adjacent pins (out of –5 µA/+0 µA range), or other functional failure (for example reset, oscillator frequency deviation).

A negative induced leakage current is caused by negative injection and positive induced leakage current by positive injection.

The test results are given in *Table 65*.

Table 65. I/O current injection susceptibility

Symbol	Description	Functional susceptibility		Unit
		Negative injection	Positive injection	
I_{INJ}	Injected current on BOOT0, DSI_D0P, DSI_D0N, DSI_D1P, DSI_D1N, DSI_CKP, DSI_CKN pin	− 0	0	mA
	Injected current on NRST pin	− 0	NA(1)	
	Injected current on PC0, PC2, PH1_OSCOUT pins	− 0	NA(1)	
	Injected current on any other FT pin	− 5	NA(1)	
	Injected current on any other pins	− 5	+5	

1. Injection is not possible.

Note: It is recommended to add a Schottky diode (pin to ground) to analog pins which may potentially inject negative currents.

6.3.20 I/O port characteristics

For information on GPIO configuration, refer to the application note *STM32 GPIO configuration for hardware settings and low-power consumption* (AN4899), available from the ST website *www.st.com*.

General input/output characteristics

Unless otherwise specified, the parameters given in *Table 66: I/O static characteristics* are derived from tests performed under the conditions summarized in *Table 17*. All I/Os are CMOS and TTL compliant.

Table 66. I/O static characteristics

Symbol	Parameter	Conditions	Min	Typ	Max	Unit
V_{IL}	FT, TTa and NRST I/O input low level voltage	1.7 V≤V_{DD}≤3.6 V	-	-	$0.35V_{DD}-0.04$(1)	V
					$0.3V_{DD}$(2)	
	BOOT I/O input low level voltage	1.75 V≤V_{DD} ≤3.6 V, –40 °C≤T_A ≤105 °C	-	-	$0.1V_{DD}+0.1$(1)	
		1.7 V≤V_{DD} ≤3.6 V, 0 °C≤T_A ≤105 °C	-	-		

Table 66. I/O static characteristics (continued)

Symbol	Parameter		Conditions	Min	Typ	Max	Unit
V_{IH}	FT, TTa and NRST I/O input high level voltage(5)		1.7 V≤V_{DD}≤3.6 V	0.45V_{DD}+0.3(1)	-	-	V
				0.7V_{DD}(2)			
	BOOT I/O input high level voltage		1.75 V≤V_{DD} ≤3.6 V, –40 °C≤T_A ≤105 °C	0.17V_{DD}+0.7(1)	-	-	
			1.7 V≤V_{DD} ≤3.6 V, 0 °C≤T_A ≤105 °C				
V_{HYS}	FT, TTa and NRST I/O input hysteresis		1.7 V≤V_{DD}≤3.6 V	10%V_{DD}(3)	-	-	V
	BOOT I/O input hysteresis		1.75 V≤V_{DD} ≤3.6 V, –40 °C≤T_A ≤105 °C	0.1	-	-	
			1.7 V≤V_{DD} ≤3.6 V, 0 °C≤T_A ≤105 °C				
I_{lkg}	I/O input leakage current (4)		V_{SS} ≤V_{IN} ≤V_{DD}	-	-	±1	µA
	I/O FT input leakage current (5)		V_{IN} = 5 V	-	-	3	
R_{PU}	Weak pull-up equivalent resistor(6)	All pins except for PA10/PB12 (OTG_FS_ID,OTG_HS_ID)	V_{IN} = V_{SS}	30	40	50	kΩ
		PA10/PB12 (OTG_FS_ID,OTG_HS_ID)		7	10	14	
R_{PD}	Weak pull-down equivalent resistor(7)	All pins except for PA10/PB12 (OTG_FS_ID,OTG_HS_ID)	V_{IN} = V_{DD}	30	40	50	
		PA10/PB12 (OTG_FS_ID,OTG_HS_ID)		7	10	14	
C_{IO}(8)	I/O pin capacitance		-	-	5	-	pF

1. Guaranteed by design.
2. Tested in production.
3. With a minimum of 200 mV.
4. Leakage could be higher than the maximum value, if negative current is injected on adjacent pins, Refer to *Table 65: I/O current injection susceptibility*
5. To sustain a voltage higher than VDD +0.3 V, the internal pull-up/pull-down resistors must be disabled. Leakage could be higher than the maximum value, if negative current is injected on adjacent pins.Refer to *Table 65: I/O current injection susceptibility*
6. Pull-up resistors are designed with a true resistance in series with a switchable PMOS. This PMOS contribution to the series resistance is minimum (~10% order).

7. Pull-down resistors are designed with a true resistance in series with a switchable NMOS. This NMOS contribution to the series resistance is minimum (~10% order).
8. Hysteresis voltage between Schmitt trigger switching levels. Guaranteed by characterization results.

All I/Os are CMOS and TTL compliant (no software configuration required). Their characteristics cover more than the strict CMOS-technology or TTL parameters. The coverage of these requirements for FT I/Os is shown in *Figure 38*.

Figure 38. FT I/O input characteristics

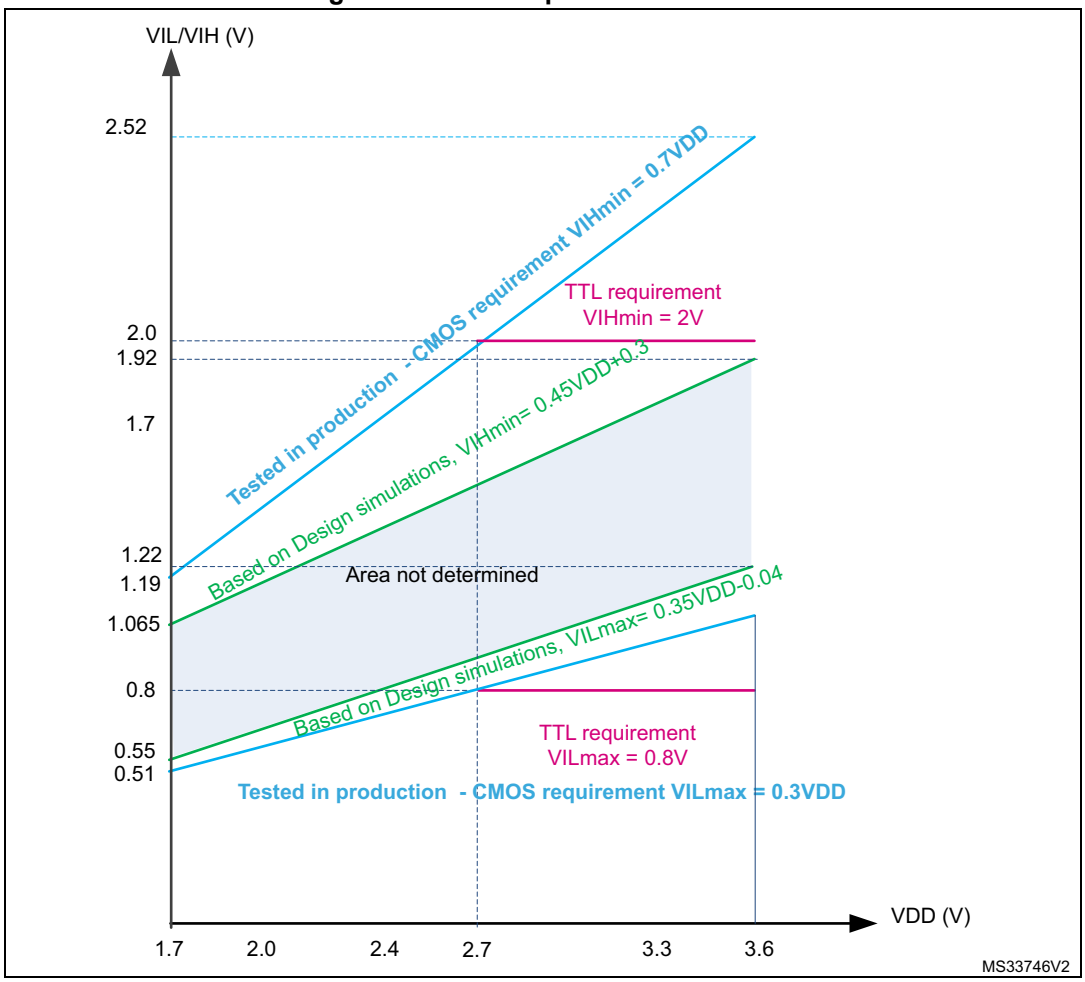

Output driving current

The GPIOs (general purpose input/outputs) can sink or source up to ±8 mA, and sink or source up to ±20 mA (with a relaxed V_{OL}/V_{OH}) except PC13, PC14, PC15 and PI8 which can sink or source up to ±3mA. When using the PC13 to PC15 and PI8 GPIOs in output mode, the speed should not exceed 2 MHz with a maximum load of 30 pF.

In the user application, the number of I/O pins which can drive current must be limited to respect the absolute maximum rating specified in *Section 6.2*. In particular:

- The sum of the currents sourced by all the I/Os on $V_{DD,}$ plus the maximum Run consumption of the MCU sourced on $V_{DD,}$ cannot exceed the absolute maximum rating $\sum I_{VDD}$ (see *Table 15*).
- The sum of the currents sunk by all the I/Os on V_{SS} plus the maximum Run consumption of the MCU sunk on V_{SS} cannot exceed the absolute maximum rating $\sum I_{VSS}$ (see *Table 15*).

Output voltage levels

Unless otherwise specified, the parameters given in *Table 67* are derived from tests performed under ambient temperature and V_{DD} supply voltage conditions summarized in *Table 17*. All I/Os are CMOS and TTL compliant.

Table 67. Output voltage characteristics

Symbol	Parameter	Conditions	Min	Max	Unit
V_{OL}(1)	Output low level voltage for an I/O pin	CMOS port(2) I_{IO} = +8 mA 2.7 V ≤V_{DD} ≤3.6 V	-	0.4	V
V_{OH}(3)	Output high level voltage for an I/O pin except PC14	CMOS port(2) I_{IO} = -8 mA 2.7 V ≤V_{DD} ≤3.6 V	V_{DD} − 0.4	-	
V_{OH}(3)	Output high level voltage for PC14	CMOS port(2) I_{IO} = -2 mA 2.7 V ≤V_{DD} ≤3.6 V	V_{DD} − 0.4	-	
V_{OL} (1)	Output low level voltage for an I/O pin	TTL port(2) I_{IO} =+8mA 2.7 V ≤V_{DD} ≤3.6 V	-	0.4	V
V_{OH} (3)	Output high level voltage for an I/O pin except PC14	TTL port(2) I_{IO} =-8mA 2.7 V ≤V_{DD} ≤3.6 V	2.4	-	
V_{OL}(1)	Output low level voltage for an I/O pin	I_{IO} = +20 mA 2.7 V ≤V_{DD} ≤3.6 V	-	1.3(4)	V
V_{OH}(3)	Output high level voltage for an I/O pin except PC14	I_{IO} = -20 mA 2.7 V ≤V_{DD} ≤3.6 V	V_{DD}−1.3(4)	-	
V_{OL}(1)	Output low level voltage for an I/O pin	I_{IO} = +6 mA 1.8 V ≤V_{DD} ≤3.6 V	-	0.4(4)	V
V_{OH}(3)	Output high level voltage for an I/O pin except PC14	I_{IO} = -6 mA 1.8 V ≤V_{DD} ≤3.6 V	V_{DD}−0.4(4)	-	

Table 67. Output voltage characteristics (continued)

Symbol	Parameter	Conditions	Min	Max	Unit
V_{OL}(1)	Output low level voltage for an I/O pin	I_{IO} = +4 mA 1.7 V ≤V_{DD} ≤3.6V	-	0.4(5)	V
V_{OH}(3)	Output high level voltage for an I/O pin except PC14	I_{IO} = -4 mA 1.7 V ≤V_{DD} ≤3.6V	V_{DD}−0.4(5)	-	
V_{OH}(3)	Output high level voltage for PC14	I_{IO} = -1 mA 1.7 V ≤V_{DD} ≤3.6V	V_{DD}−0.4(5)	-	

1. The I_{IO} current sunk by the device must always respect the absolute maximum rating specified in *Table 15*. and the sum of I_{IO} (I/O ports and control pins) must not exceed I_{VSS}.
2. TTL and CMOS outputs are compatible with JEDEC standards JESD36 and JESD52.
3. The I_{IO} current sourced by the device must always respect the absolute maximum rating specified in *Table 15* and the sum of I_{IO} (I/O ports and control pins) must not exceed I_{VDD}.
4. Based on characterization data.
5. Guaranteed by design.

Input/output AC characteristics

The definition and values of input/output AC characteristics are given in *Figure 39* and *Table 68*, respectively.

Unless otherwise specified, the parameters given in *Table 68* are derived from tests performed under the ambient temperature and V_{DD} supply voltage conditions summarized in *Table 17*.

Table 68. I/O AC characteristics(1)(2)

OSPEEDRy [1:0] bit value(1)	Symbol	Parameter	Conditions	Min	Typ	Max	Unit
00	$f_{max(IO)out}$	Maximum frequency(3)	C_L = 50 pF, V_{DD} ≥ 2.7 V	-	-	4	MHz
			C_L = 50 pF, V_{DD} ≥ 1.7 V	-	-	2	
			C_L = 10 pF, V_{DD} ≥ 2.7 V	-	-	8	
			C_L = 10 pF, V_{DD} ≥ 1.8 V	-	-	4	
			C_L = 10 pF, V_{DD} ≥ 1.7 V	-	-	3	
	$t_{f(IO)out}$/ $t_{r(IO)out}$	Output high to low level fall time and output low to high level rise time	C_L = 50 pF, V_{DD} = 1.7 V to 3.6 V	-	-	100	ns

Table 68. I/O AC characteristics(1)(2) (continued)

OSPEEDRy [1:0] bit value(1)	Symbol	Parameter	Conditions	Min	Typ	Max	Unit
01	$f_{max(IO)out}$	Maximum frequency(3)	C_L = 50 pF, V_{DD}≥ 2.7 V	-	-	25	MHz
			C_L = 50 pF, V_{DD}≥ 1.8 V	-	-	12.5	
			C_L = 50 pF, V_{DD}≥ 1.7 V	-	-	10	
			C_L = 10 pF, V_{DD} ≥ 2.7 V	-	-	50	
			C_L = 10 pF, V_{DD}≥ 1.8 V	-	-	20	
			C_L = 10 pF, V_{DD}≥ 1.7 V	-	-	12.5	
	$t_{f(IO)out}$/ $t_{r(IO)out}$	Output high to low level fall time and output low to high level rise time	C_L = 50 pF, V_{DD} ≥ 2.7 V	-	-	10	ns
			C_L = 10 pF, V_{DD} ≥ 2.7 V	-	-	6	
			C_L = 50 pF, V_{DD} ≥ 1.7 V	-	-	20	
			C_L = 10 pF, V_{DD} ≥ 1.7 V	-	-	10	
10	$f_{max(IO)out}$	Maximum frequency(3)	C_L = 40 pF, V_{DD} ≥ 2.7 V	-	-	50(4)	MHz
			C_L = 10 pF, V_{DD} ≥ 2.7 V	-	-	100(4)	
			C_L = 40 pF, V_{DD} ≥ 1.7 V	-	-	25	
			C_L = 10 pF, V_{DD} ≥ 1.8 V	-	-	50	
			C_L = 10 pF, V_{DD} ≥ 1.7 V	-	-	42.5	
	$t_{f(IO)out}$/ $t_{r(IO)out}$	Output high to low level fall time and output low to high level rise time	C_L = 40 pF, V_{DD} ≥2.7 V	-	-	6	ns
			C_L = 10 pF, V_{DD} ≥ 2.7 V	-	-	4	
			C_L = 40 pF, V_{DD} ≥ 1.7 V	-	-	10	
			C_L = 10 pF, V_{DD} ≥ 1.7 V	-	-	6	
11	$f_{max(IO)out}$	Maximum frequency(3)	C_L = 30 pF, V_{DD} ≥ 2.7 V	-	-	100(4)	MHz
			C_L = 30 pF, V_{DD} ≥ 1.8 V	-	-	50	
			C_L = 30 pF, V_{DD} ≥ 1.7 V	-	-	42.5	
			C_L = 10 pF, V_{DD}≥ 2.7 V	-	-	180(4)	
			C_L = 10 pF, V_{DD} ≥ 1.8 V	-	-	100	
			C_L = 10 pF, V_{DD} ≥ 1.7 V	-	-	72.5	
	$t_{f(IO)out}$/ $t_{r(IO)out}$	Output high to low level fall time and output low to high level rise time	C_L = 30 pF, V_{DD} ≥ 2.7 V	-	-	4	ns
			C_L = 30 pF, V_{DD} ≥1.8 V	-	-	6	
			C_L = 30 pF, V_{DD} ≥1.7 V	-	-	7	
			C_L = 10 pF, V_{DD} ≥ 2.7 V	-	-	2.5	
			C_L = 10 pF, V_{DD} ≥1.8 V	-	-	3.5	
			C_L = 10 pF, V_{DD} ≥1.7 V	-	-	4	
-	tEXTIpw	Pulse width of external signals detected by the EXTI controller	-	10	-	-	ns

1. Guaranteed by design.
2. The I/O speed is configured using the OSPEEDRy[1:0] bits. Refer to the STM32F76xxx and STM32F77xxx reference manual for a description of the GPIOx_SPEEDR GPIO port output speed register.
3. The maximum frequency is defined in *Figure 39*.
4. For maximum frequencies above 50 MHz and V_{DD} > 2.4 V, the compensation cell should be used.

Figure 39. I/O AC characteristics definition

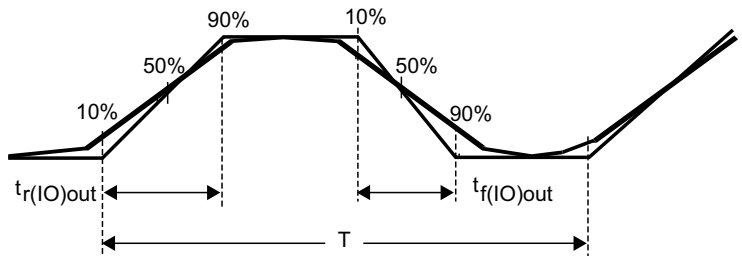

Maximum frequency is achieved with a duty cycle at (45 - 55%) when loaded by the specified capacitance.

6.3.21 NRST pin characteristics

The NRST pin input driver uses CMOS technology. It is connected to a permanent pull-up resistor, R_{PU} (see *Table 66: I/O static characteristics*).

Unless otherwise specified, the parameters given in *Table 69* are derived from tests performed under the ambient temperature and V_{DD} supply voltage conditions summarized in *Table 17*.

Table 69. NRST pin characteristics

Symbol	Parameter	Conditions	Min	Typ	Max	Unit
R_{PU}	Weak pull-up equivalent resistor(1)	$V_{IN} = V_{SS}$	30	40	50	kΩ
$V_{F(NRST)}$(2)	NRST Input filtered pulse	-	-	-	100	ns
$V_{NF(NRST)}$(2)	NRST Input not filtered pulse	V_{DD} > 2.7 V	300	-	-	ns
T_{NRST_OUT}	Generated reset pulse duration	Internal Reset source	20	-	-	µs

1. The pull-up is designed with a true resistance in series with a switchable PMOS. This PMOS contribution to the series resistance must be minimum (~10% order).
2. Guaranteed by design.

Figure 40. Recommended NRST pin protection

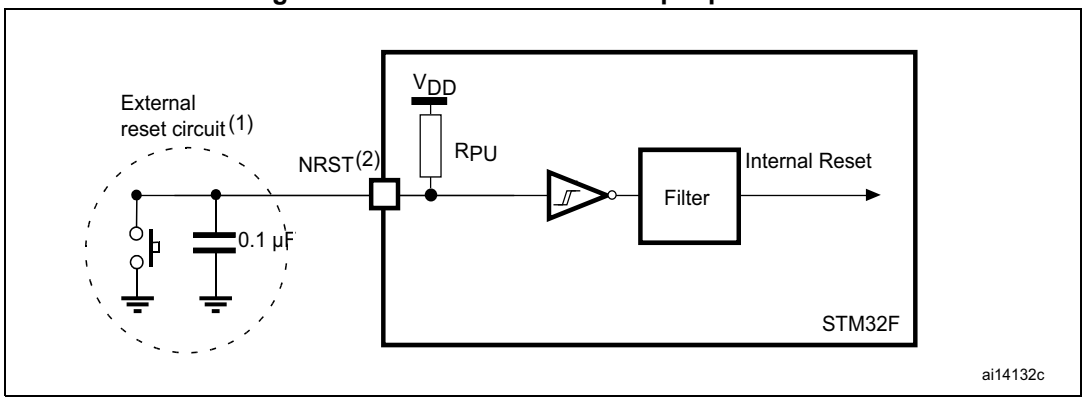

1. The reset network protects the device against parasitic resets. 0.1 uF capacitor must be placed as close as possible to the chip.
2. The user must ensure that the level on the NRST pin can go below the $V_{IL(NRST)}$ max level specified in *Table 66*. Otherwise the reset is not taken into account by the device.

6.3.22 TIM timer characteristics

The parameters given in *Table 70* are guaranteed by design.

Refer to *Section 6.3.20: I/O port characteristics* for details on the input/output alternate function characteristics (output compare, input capture, external clock, PWM output).

Table 70. TIMx characteristics(1)(2)

Symbol	Parameter	Conditions(3)	Min	Max	Unit
$t_{res(TIM)}$	Timer resolution time	AHB/APBx prescaler=1 or 2 or 4, $f_{TIMxCLK}$ = 216 MHz	1	-	$t_{TIMxCLK}$
		AHB/APBx prescaler>4, $f_{TIMxCLK}$ = 100 MHz	1	-	$t_{TIMxCLK}$
f_{EXT}	Timer external clock frequency on CH1 to CH4	$f_{TIMxCLK}$ = 216 MHz	0	$f_{TIMxCLK}/2$	MHz
Res_{TIM}	Timer resolution		-	16/32	bit
t_{MAX_COUNT}	Maximum possible count with 32-bit counter	-	-	65536 × 65536	$t_{TIMxCLK}$

1. TIMx is used as a general term to refer to the TIM1 to TIM12 timers.
2. Guaranteed by design.
3. The maximum timer frequency on APB1 or APB2 is up to 216 MHz, by setting the TIMPRE bit in the RCC_DCKCFGR register, if APBx prescaler is 1 or 2 or 4, then TIMxCLK = HCLK, otherwise TIMxCLK = 4x PCLKx.

6.3.23 RTC characteristics

Table 71. RTC characteristics

Symbol	Parameter	Conditions	Min	Max
-	f_{PCLK1}/RTCCLK frequency ratio	Any read/write operation from/to an RTC register	4	-

6.3.24 12-bit ADC characteristics

Unless otherwise specified, the parameters given in *Table 72* are derived from tests performed under the ambient temperature, f_{PCLK2} frequency and V_{DDA} supply voltage conditions summarized in *Table 17*.

Table 72. ADC characteristics

Symbol	Parameter	Conditions	Min	Typ	Max	Unit
V_{DDA}	Power supply	$V_{DDA} - V_{REF+} < 1.2$ V	1.7(1)	-	3.6	V
V_{REF+}	Positive reference voltage		1.7(1)	-	V_{DDA}	V
f_{ADC}	ADC clock frequency	V_{DDA} = 1.7(1) to 2.4 V	0.6	15	18	MHz
		V_{DDA} = 2.4 to 3.6 V	0.6	30	36	MHz
f_{TRIG}(2)	External trigger frequency	f_{ADC} = 30 MHz, 12-bit resolution	-	-	1764	kHz
		-	-	-	17	$1/f_{ADC}$
V_{AIN}	Conversion voltage range(3)	-	0 (V_{SSA} or V_{REF-} tied to ground)	-	V_{REF+}	V
R_{AIN}(2)	External input impedance	See *Equation 1* for details	-	-	50	kΩ
R_{ADC}(2)(4)	Sampling switch resistance	-	1.5	-	6	kΩ
C_{ADC}(2)	Internal sample and hold capacitor	-	-	4	7	pF
t_{lat}(2)	Injection trigger conversion latency	f_{ADC} = 30 MHz	-	-	0.100	µs
		-	-	-	3(5)	$1/f_{ADC}$
t_{latr}(2)	Regular trigger conversion latency	f_{ADC} = 30 MHz	-	-	0.067	µs
		-	-	-	2(5)	$1/f_{ADC}$
t_S(2)	Sampling time	f_{ADC} = 30 MHz	0.100	-	16	µs
		-	3	-	480	$1/f_{ADC}$
t_{STAB}(2)	Power-up time	-	-	2	3	µs

Table 72. ADC characteristics (continued)

Symbol	Parameter	Conditions	Min	Typ	Max	Unit
t_{CONV}(2)	Total conversion time (including sampling time)	f_{ADC} = 30 MHz 12-bit resolution	0.50	-	16.40	µs
		f_{ADC} = 30 MHz 10-bit resolution	0.43	-	16.34	µs
		f_{ADC} = 30 MHz 8-bit resolution	0.37	-	16.27	µs
		f_{ADC} = 30 MHz 6-bit resolution	0.30	-	16.20	µs
		9 to 492 (t_S for sampling +n-bit resolution for successive approximation)				$1/f_{ADC}$
f_S(2)	Sampling rate (f_{ADC} = 36 MHz, and t_S = 3 ADC cycles)	12-bit resolution Single ADC	-	-	2.4	Msps
		12-bit resolution Interleave Dual ADC mode	-	-	4.5	Msps
		12-bit resolution Interleave Triple ADC mode	-	-	7.2	Msps
I_{VREF+}(2)	ADC V_{REF} DC current consumption in conversion mode	-	-	300	500	µA
I_{VDDA}(2)	ADC V_{DDA} DC current consumption in conversion mode	-	-	1.6	1.8	mA

1. V_{DDA} minimum value of 1.7 V is obtained with the use of an external power supply supervisor (refer to *Section 3.18.2: Internal reset OFF*).
2. Guaranteed by characterization results.
3. V_{REF+} is internally connected to V_{DDA} and V_{REF-} is internally connected to V_{SSA}.
4. R_{ADC} maximum value is given for V_{DD}=1.7 V, and minimum value for V_{DD}=3.3 V.
5. For external triggers, a delay of $1/f_{PCLK2}$ must be added to the latency specified in *Table 72*.

Equation 1: R_{AIN} max formula

$$R_{AIN} = \frac{(k - 0.5)}{f_{ADC} \times C_{ADC} \times \ln(2^{N+2})} - R_{ADC}$$

The formula above (*Equation 1*) is used to determine the maximum external impedance allowed for an error below 1/4 of LSB. N = 12 (from 12-bit resolution) and k is the number of sampling periods defined in the ADC_SMPR1 register.

Table 73. ADC static accuracy at f_{ADC} = 18 MHz

Symbol	Parameter	Test conditions	Typ	Max(1)	Unit
ET	Total unadjusted error	f_{ADC} =18 MHz V_{DDA} = 1.7 to 3.6 V V_{REF} = 1.7 to 3.6 V $V_{DDA} - V_{REF}$ < 1.2 V	±3	±4	LSB
EO	Offset error		±2	±3	
EG	Gain error		±1	±3	
ED	Differential linearity error		±1	±2	
EL	Integral linearity error		±2	±3	

1. Guaranteed by characterization results.

Table 74. ADC static accuracy at f_{ADC} = 30 MHz

Symbol	Parameter	Test conditions	Typ	Max(1)	Unit
ET	Total unadjusted error	f_{ADC} = 30 MHz, R_{AIN} < 10 kΩ, V_{DDA} = 2.4 to 3.6 V, V_{REF} = 1.7 to 3.6 V, $V_{DDA} - V_{REF}$ < 1.2 V	±2	±5	LSB
EO	Offset error		±1.5	±2.5	
EG	Gain error		±1.5	±4	
ED	Differential linearity error		±1	±2	
EL	Integral linearity error		±1.5	±3	

1. Guaranteed by characterization results.

Table 75. ADC static accuracy at f_{ADC} = 36 MHz

Symbol	Parameter	Test conditions	Typ	Max(1)	Unit
ET	Total unadjusted error	f_{ADC} =36 MHz, V_{DDA} = 2.4 to 3.6 V, V_{REF} = 1.7 to 3.6 V $V_{DDA} - V_{REF}$ < 1.2 V	±4	±7	LSB
EO	Offset error		±2	±3	
EG	Gain error		±3	±6	
ED	Differential linearity error		±2	±3	
EL	Integral linearity error		±3	±6	

1. Guaranteed by characterization results.

Table 76. ADC dynamic accuracy at f_{ADC} = 18 MHz - limited test conditions(1)

Symbol	Parameter	Test conditions	Min	Typ	Max	Unit
ENOB	Effective number of bits	f_{ADC} =18 MHz V_{DDA} = V_{REF+}= 1.7 V Input Frequency = 20 KHz Temperature = 25 °C	10.3	10.4	-	bits
SINAD	Signal-to-noise and distortion ratio		64	64.2	-	dB
SNR	Signal-to-noise ratio		64	65	-	
THD	Total harmonic distortion		− 67	− 72	-	

1. Guaranteed by characterization results.

Table 77. ADC dynamic accuracy at f_{ADC} = 36 MHz - limited test conditions(1)

Symbol	Parameter	Test conditions	Min	Typ	Max	Unit
ENOB	Effective number of bits	f_{ADC} =36 MHz $V_{DDA} = V_{REF+}$ = 3.3 V Input Frequency = 20 KHz Temperature = 25 °C	10.6	10.8	-	bits
SINAD	Signal-to noise and distortion ratio		66	67	-	dB
SNR	Signal-to noise ratio		64	68	-	
THD	Total harmonic distortion		− 70	− 72	-	

1. Guaranteed by characterization results.

Note: ADC accuracy vs. negative injection current: injecting a negative current on any analog input pins should be avoided as this significantly reduces the accuracy of the conversion being performed on another analog input. It is recommended to add a Schottky diode (pin to ground) to analog pins which may potentially inject negative currents.

Any positive injection current within the limits specified for $I_{INJ(PIN)}$ and $\sum I_{INJ(PIN)}$ in *Section 6.3.20* does not affect the ADC accuracy.

Figure 41. ADC accuracy characteristics

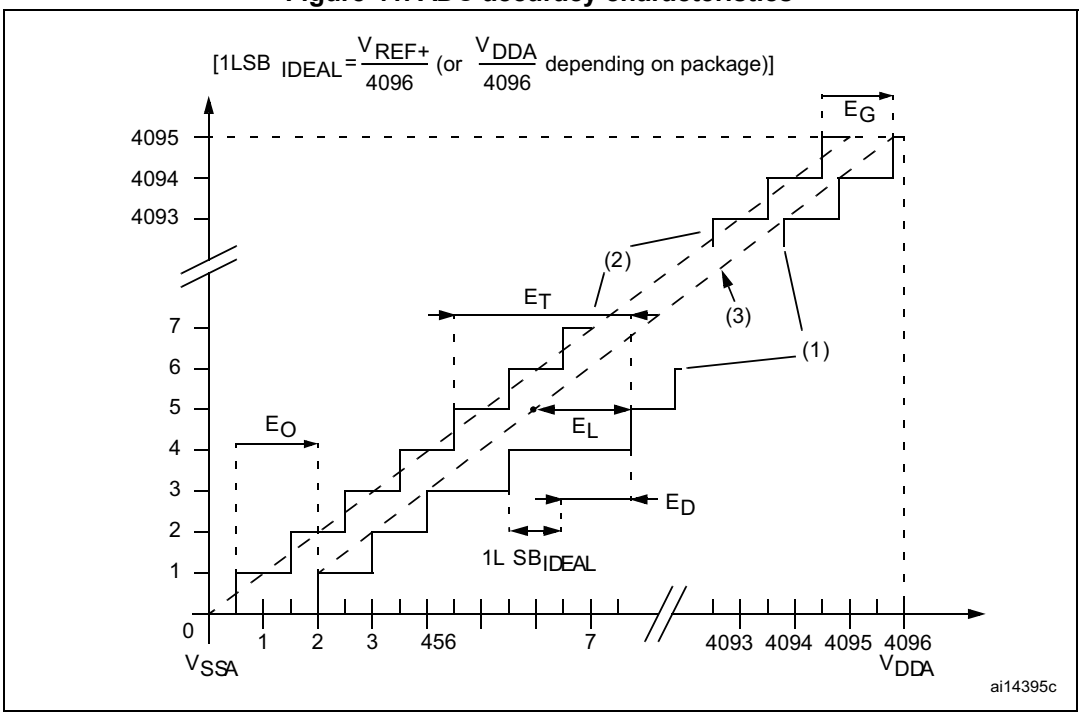

1. See also *Table 74*.
2. Example of an actual transfer curve.
3. Ideal transfer curve.
4. End point correlation line.
5. E_T = Total Unadjusted Error: maximum deviation between the actual and the ideal transfer curves.
   EO = Offset Error: deviation between the first actual transition and the first ideal one.
   EG = Gain Error: deviation between the last ideal transition and the last actual one.
   ED = Differential Linearity Error: maximum deviation between actual steps and the ideal one.
   EL = Integral Linearity Error: maximum deviation between any actual transition and the end point correlation line.

Figure 42. Typical connection diagram when using the ADC with FT/TT pins featuring analog switch function

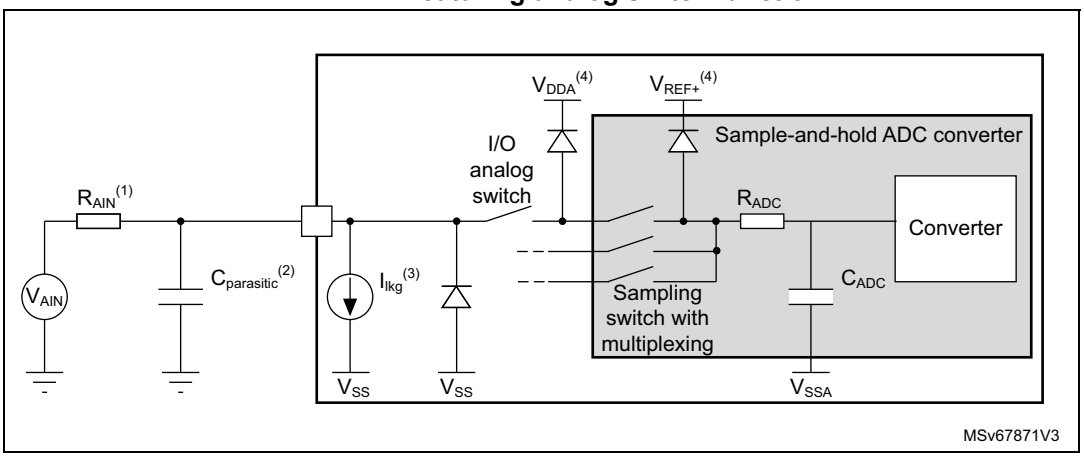

1. Refer to *Table 72* for the values of R_{AIN}, R_{ADC} and C_{ADC}.
2. $C_{parasitic}$ represents the capacitance of the PCB (dependent on soldering and PCB layout quality) plus the pad capacitance (roughly 5 pF). A high $C_{parasitic}$ value downgrades conversion accuracy. To remedy this, f_{ADC} should be reduced.
3. Refer to *Section Table 66.: I/O static characteristics* for the value of I_{lkg},
4. Refer to *Section 6.1.6: Power supply scheme*.

General PCB design guidelines

Power supply decoupling should be performed as shown in *Figure 43* or *Figure 44*, depending on whether V_{REF+} is connected to V_{DDA} or not. The 10 nF capacitors should be ceramic (good quality). They should be placed them as close as possible to the chip.

Figure 43. Power supply and reference decoupling (V_{REF+} not connected to V_{DDA})

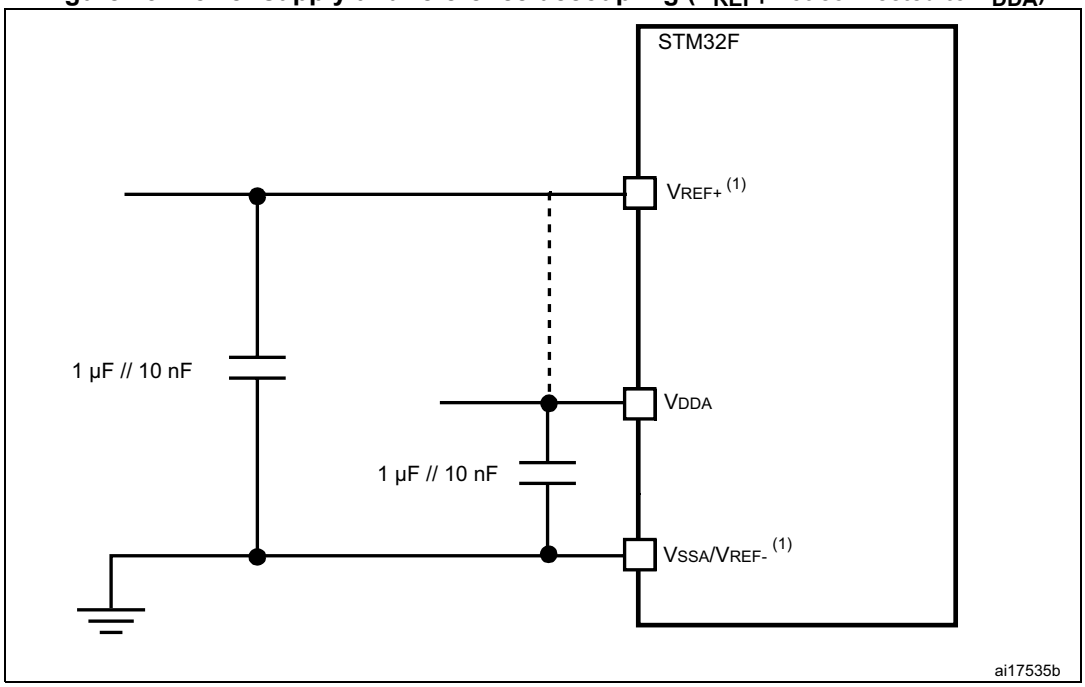

1. V_{REF+} input is available on all packages except TFBGA100 whereas the V_{REF-} s available only on UFBGA176 and TFBGA216. When V_{REF-} is not available, it is internally connected to V_{DDA} and V_{SSA}.

Figure 44. Power supply and reference decoupling (V_{REF+} connected to V_{DDA})

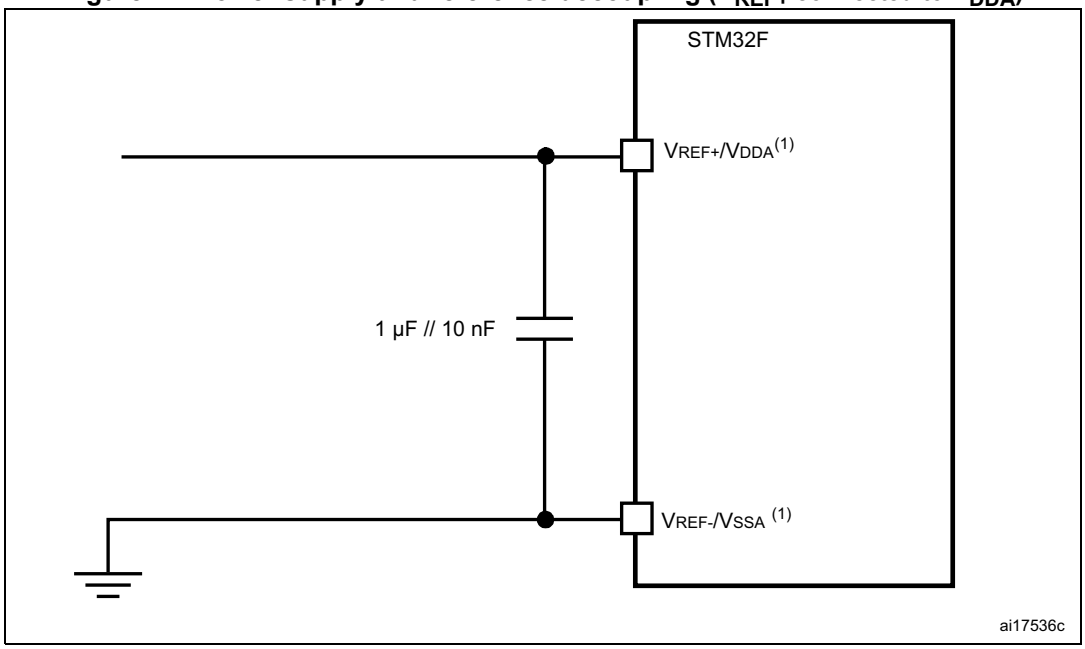

1. V_{REF+} input is available on all packages except TFBGA100 whereas the V_{REF-} s available only on UFBGA176 and TFBGA216. When V_{REF-} is not available, it is internally connected to V_{DDA} and V_{SSA}.

6.3.25 Temperature sensor characteristics

Table 78. Temperature sensor characteristics

Symbol	Parameter	Min	Typ	Max	Unit
T_L(1)	V_{SENSE} linearity with temperature	-	±1	±2	°C
Avg_Slope(1)	Average slope	-	2.5	-	mV/°C
V_{25}(1)	Voltage at 25 °C	-	0.76	-	V
t_{START}(2)	Startup time	-	6	10	µs
T_{S_temp}(2)	ADC sampling time when reading the temperature (1 °C accuracy)	10	-	-	µs

1. Guaranteed by characterization results.
2. Guaranteed by design.

Table 79. Temperature sensor calibration values

Symbol	Parameter	Memory address
TS_CAL1	TS ADC raw data acquired at temperature of 30 °C, V_{DDA}= 3.3 V	0x1FF0 F44C - 0x1FF0 F44D
TS_CAL2	TS ADC raw data acquired at temperature of 110 °C, V_{DDA}= 3.3 V	0x1FF0 F44E - 0x1FF0 F44F

6.3.26 V_{BAT} monitoring characteristics

Table 80. V_{BAT} monitoring characteristics

Symbol	Parameter	Min	Typ	Max	Unit
R	Resistor bridge for V_{BAT}	-	50	-	KΩ
Q	Ratio on V_{BAT} measurement	-	4	-	-
Er(1)	Error on Q	–1	-	+1	%
T_{S_vbat}(2)(2)	ADC sampling time when reading the V_{BAT} 1 mV accuracy	5	-	-	µs

1. Guaranteed by design.
2. Shortest sampling time can be determined in the application by multiple iterations.

6.3.27 Reference voltage

The parameters given in *Table 81* are derived from tests performed under ambient temperature and V_{DD} supply voltage conditions summarized in *Table 17*.

Table 81. internal reference voltage

Symbol	Parameter	Conditions	Min	Typ	Max	Unit
V_{REFINT}	Internal reference voltage	–40 °C < T_A < +105 °C	1.18	1.21	1.24	V
$T_{S_vrefint}$(1)	ADC sampling time when reading the internal reference voltage	-	10	-	-	µs
V_{REFINT_s}(2)	Internal reference voltage spread over the temperature range	V_{DD} = 3V ± 10mV	-	3	5	mV

Table 81. internal reference voltage (continued)

Symbol	Parameter	Conditions	Min	Typ	Max	Unit
T_{Coeff}(2)	Temperature coefficient	-	-	30	50	ppm/°C
t_{START}(2)	Startup time	-	-	6	10	µs

1. Shortest sampling time can be determined in the application by multiple iterations.
2. Guaranteed by design.

Table 82. Internal reference voltage calibration values

Symbol	Parameter	Memory address
V_{REFIN_CAL}	Raw data acquired at temperature of 30 °C $_{VDDA}$ = 3.3 V	0x1FF0 F44A - 0x1FF0 F44B

6.3.28 DAC electrical characteristics

Table 83. DAC characteristics

Symbol	Parameter		Min	Typ	Max	Unit	Comments
V_{DDA}	Analog supply voltage		1.7(1)	-	3.6	V	-
V_{REF+}	Reference supply voltage		1.7(1)	-	3.6	V	$V_{REF+} \leq V_{DDA}$
V_{SSA}	Ground		0	-	0	V	-
R_{LOAD}(2)	Resistive load with buffer ON	Connected to V_{SSA}	5	-	-	kΩ	-
		Connected to V_{DDA}	25	-	-		
R_O(2)	Impedance output with buffer OFF		-	-	15	kΩ	When the buffer is OFF, the Minimum resistive load between DAC_OUT and V_{SS} to have a 1% accuracy is 1.5 MΩ
C_{LOAD}(2)	Capacitive load		-	-	50	pF	Maximum capacitive load at DAC_OUT pin (when the buffer is ON).
DAC_OUT min(2)	Lower DAC_OUT voltage with buffer ON		0.2	-	-	V	It gives the maximum output excursion of the DAC. It corresponds to 12-bit input code (0x0E0) to (0xF1C) at V_{REF+} = 3.6 V and (0x1C7) to (0xE38) at V_{REF+} = 1.7 V
DAC_OUT max(2)	Higher DAC_OUT voltage with buffer ON		-	-	V_{DDA} – 0.2	V	
DAC_OUT min(2)	Lower DAC_OUT voltage with buffer OFF		-	0.5	-	mV	It gives the maximum output excursion of the DAC.
DAC_OUT max(2)	Higher DAC_OUT voltage with buffer OFF		-	-	V_{REF+} – 1LSB	V	

Table 83. DAC characteristics (continued)

Symbol	Parameter	Min	Typ	Max	Unit	Comments
I_{VREF+}(4)	DAC DC V_{REF} current consumption in quiescent mode (Standby mode)	-	170	240	µA	With no load, worst code (0x800) at V_{REF+} = 3.6 V in terms of DC consumption on the inputs
		-	50	75		With no load, worst code (0xF1C) at V_{REF+} = 3.6 V in terms of DC consumption on the inputs
I_{DDA}(4)	DAC DC V_{DDA} current consumption in quiescent mode(3)	-	280	380	µA	With no load, middle code (0x800) on the inputs
		-	475	625	µA	With no load, worst code (0xF1C) at V_{REF+} = 3.6 V in terms of DC consumption on the inputs
DNL(4)	Differential non linearity Difference between two consecutive code-1LSB)	-	-	±0.5	LSB	Given for the DAC in 10-bit configuration.
		-	-	±2	LSB	Given for the DAC in 12-bit configuration.
INL(4)	Integral non linearity (difference between measured value at Code i and the value at Code i on a line drawn between Code 0 and last Code 1023)	-	-	±1	LSB	Given for the DAC in 10-bit configuration.
		-	-	±4	LSB	Given for the DAC in 12-bit configuration.
Offset(4)	Offset error (difference between measured value at Code (0x800) and the ideal value = $V_{REF+}/2$)	-	-	±10	mV	Given for the DAC in 12-bit configuration
		-	-	±3	LSB	Given for the DAC in 10-bit at V_{REF+} = 3.6 V
		-	-	±12	LSB	Given for the DAC in 12-bit at V_{REF+} = 3.6 V
Gain error(4)	Gain error	-	-	±0.5	%	Given for the DAC in 12-bit configuration
$t_{SETTLING}$(4)	Settling time (full scale: for a 10-bit input code transition between the lowest and the highest input codes when DAC_OUT reaches final value ±4LSB	-	3	6	µs	$C_{LOAD} \leq 50$ pF, $R_{LOAD} \geq 5$ kΩ
THD(4)	Total Harmonic Distortion Buffer ON	-	-	-	dB	$C_{LOAD} \leq 50$ pF, $R_{LOAD} \geq 5$ kΩ
Update rate(2)	Max frequency for a correct DAC_OUT change when small variation in the input code (from code i to i+1LSB)	-	-	1	MS/s	$C_{LOAD} \leq 50$ pF, $R_{LOAD} \geq 5$ kΩ

Table 83. DAC characteristics (continued)

Symbol	Parameter	Min	Typ	Max	Unit	Comments
t_{WAKEUP}(4)	Wakeup time from off state (Setting the ENx bit in the DAC Control register)	-	6.5	10	µs	$C_{LOAD} \leq 50$ pF, $R_{LOAD} \geq 5$ kΩ input code between lowest and highest possible ones.
PSRR+ (2)	Power supply rejection ratio (to V_{DDA}) (static DC measurement)	-	–67	–40	dB	No R_{LOAD}, C_{LOAD} = 50 pF

1. V_{DDA} minimum value of 1.7 V is obtained with the use of an external power supply supervisor (refer to *Section 3.18.2: Internal reset OFF*).
2. Guaranteed by design.
3. The quiescent mode corresponds to a state where the DAC maintains a stable output level to ensure that no dynamic consumption occurs.
4. Guaranteed by characterization results.

Figure 45. 12-bit buffered /non-buffered DAC

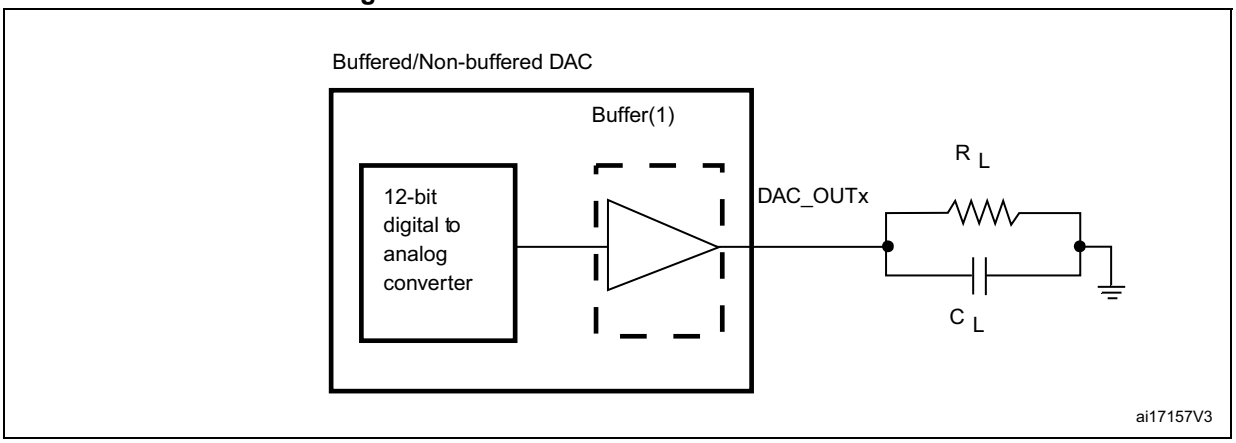

1. The DAC integrates an output buffer that can be used to reduce the output impedance and to drive external loads directly without the use of an external operational amplifier. The buffer can be bypassed by configuring the BOFFx bit in the DAC_CR register.

6.3.29 Communications interfaces

I²C interface characteristics

The I²C interface meets the timings requirements of the I²C-bus specification and user manual rev. 03 for:

- Standard-mode (Sm): with a bit rate up to 100 kbit/s
- Fast-mode (Fm): with a bit rate up to 400 kbit/s.
- Fast-mode Plus (Fm+): with a bit rate up to 1Mbit/s.

The I²C timings requirements are guaranteed by design when the I2C peripheral is properly configured (refer to RM0410 reference manual) and when the I2CCLK frequency is greater than the minimum shown in the table below:

Table 84. Minimum I2CCLK frequency in all I2C modes

Symbol	Parameter	Condition		Min	Unit
$f_{(I2CCLK)}$	I2CCLK frequency	Standard-mode	-	2	MHz
		Fast-mode	Analog filter ON DNF=0	8	
			Analog filter OFF DNF=1	9	
		Fast-mode Plus	Analog filter ON DNF=0	16	
			Analog filter OFF DNF=1	16	

The SDA and SCL I/O requirements are met with the following restrictions:

- The SDA and SCL I/O pins are not “true” open-drain. When configured as open-drain, the PMOS connected between the I/O pin and V_{DD} is disabled, but is still present.
- The 20mA output drive requirement in Fast-mode Plus is not supported. This limits the maximum load Cload supported in Fm+, which is given by these formulas:

  $Tr(SDA/SCL)=0.8473xR_pxC_{load}$

  $R_p(min)= (V_{DD}-V_{OL}(max))/I_{OL}(max)$

Where Rp is the I2C lines pull-up. Refer to *Section 6.3.20: I/O port characteristics* for the I2C I/Os characteristics.

All I^2C SDA and SCL I/Os embed an analog filter. Refer to *Table 85* for the analog filter characteristics:

Table 85. I2C analog filter characteristics(1)

Symbol	Parameter	Min	Max	Unit
t_{AF}	Maximum pulse width of spikes that are suppressed by the analog filter	50(2)	70(3)	ns

1. Guaranteed by characterization results.
2. Spikes with widths below $t_{AF(min)}$ are filtered.
3. Spikes with widths above $t_{AF(max)}$ are not filtered.

SPI interface characteristics

Unless otherwise specified, the parameters given in *Table 86* for the SPI interface are derived from tests performed under the ambient temperature, f_{PCLKx} frequency and V_{DD} supply voltage conditions summarized in *Table 17*, with the following configuration:

- Output speed is set to OSPEEDRy[1:0] = 11
- Capacitive load C = 30 pF
- Measurement points are done at CMOS levels: $0.5V_{DD}$

Refer to *Section 6.3.20: I/O port characteristics* for more details on the input/output alternate function characteristics (NSS, SCK, MOSI, MISO for SPI).

Table 86. SPI dynamic characteristics(1)

Symbol	Parameter	Conditions	Min	Typ	Max	Unit
f_{SCK} $1/t_{c(SCK)}$	SPI clock frequency	Master mode SPI1,4,5,6 2.7≤VDD≤3.6	-	-	54(2)	MHz
		Master mode SPI1,4,5,6 1.71≤VDD≤3.6			27	
		Master transmitter mode SPI1,4,5,6 1.71≤VDD≤3.6			54	
		Slave receiver mode SPI1,4,5,6 1.71≤VDD≤3.6			54	
		Slave mode transmitter/full duplex SPI1,4,5,6 2.7≤VDD≤3.6			50(3)	
		Slave mode transmitter/full duplex SPI1,4,5,6 1.71≤VDD≤3.6			37(3)	
		Master & Slave mode SPI2,3 1.71≤VDD≤3.6			27	
tsu(NSS)	NSS setup time	Slave mode, SPI presc = 2	$4*T_{PLCK}$	-	-	ns
th(NSS)	NSS hold time	Slave mode, SPI presc = 2	$2*T_{PLCK}$	-	-	
tw(SCKH) tw(SCKL)	SCK high and low time	Master mode	$T_{PLCK} - 2$	T_{PLCK}	$T_{PLCK} + 2$	

Table 86. SPI dynamic characteristics(1) (continued)

Symbol	Parameter	Conditions	Min	Typ	Max	Unit
tsu(MI)	Data input setup time	Master mode	5 10(4)	-	-	ns
tsu(SI)		Slave mode	4.5	-	-	
th(MI)	Data input hold time	Master mode	2 0(4)	-	-	
th(SI)		Slave mode	2	-	-	
ta(SO)	Data output access time	Slave mode	7	-	21	
tdis(SO)	Data output disable time	Slave mode	5	-	12	
tv(SO)	Data output valid time	Slave mode 2.7≤VDD≤3.6V	-	6.5	10	
		Slave mode 1.71≤VDD≤3.6V	-	6.5	13.5	
tv(MO)		Master mode	-	2	6	
th(SO)	Data output hold time	Slave mode 1.71≤VDD≤3.6V	4.5	-	-	
th(MO)		Master mode	0	-	-	

1. Guaranteed by characterization results.
2. Excepting SPI1 with SCK IO pin mapped on PA5. In this configuration, Maximum achievable frequency is 40MHz.
3. Maximum Frequency of Slave Transmitter is determined by sum of Tv(SO) and Tsu(MI) intervals which has to fit into SCK level phase preceding the SCK sampling edge.This value can be achieved when it communicates with a Master having Tsu(MI)=0 while signal Duty(SCK)=50%.
4. Only for SPI6.

Figure 46. SPI timing diagram - slave mode and CPHA = 0

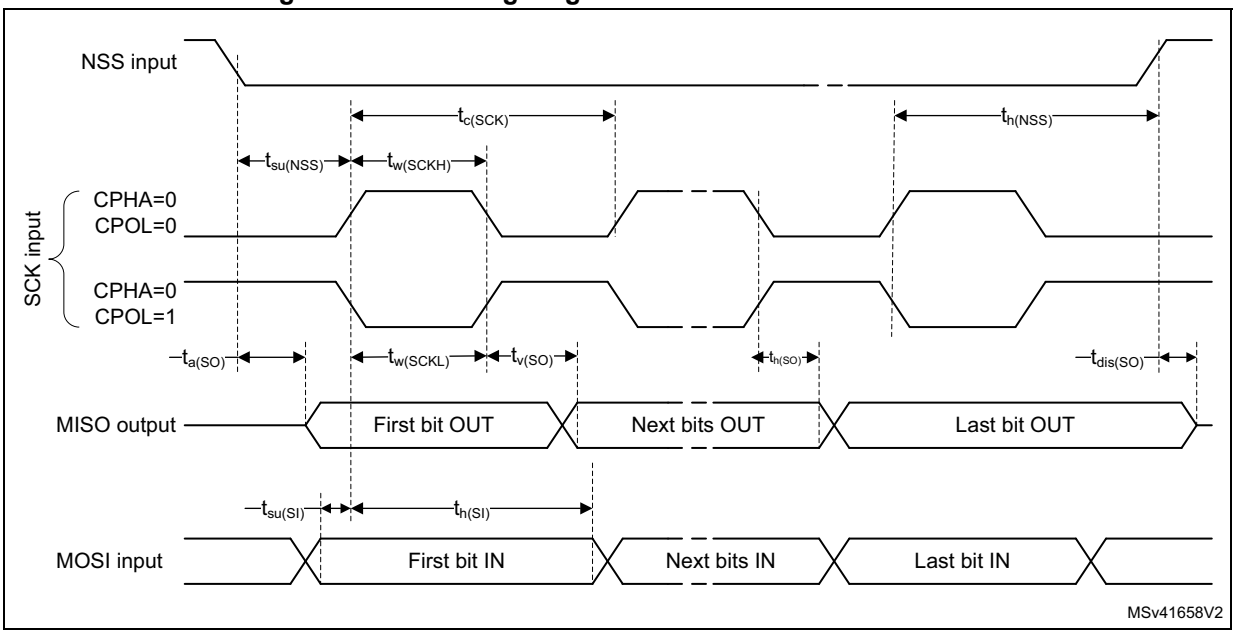

Figure 47. SPI timing diagram - slave mode and CPHA = 1

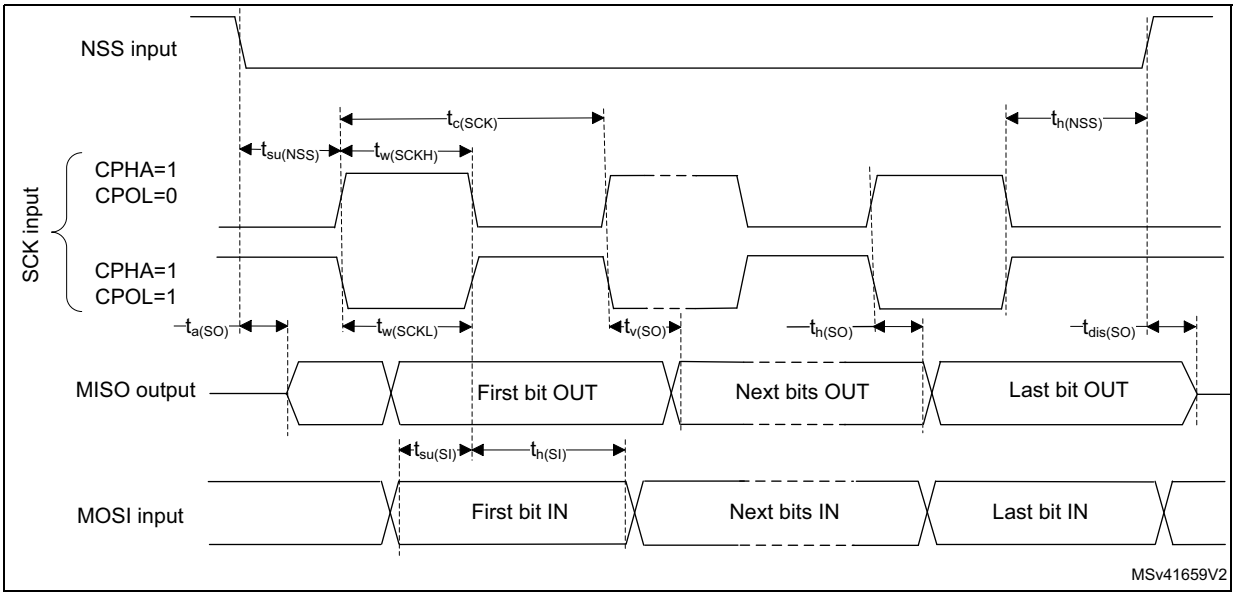

Figure 48. SPI timing diagram - master mode

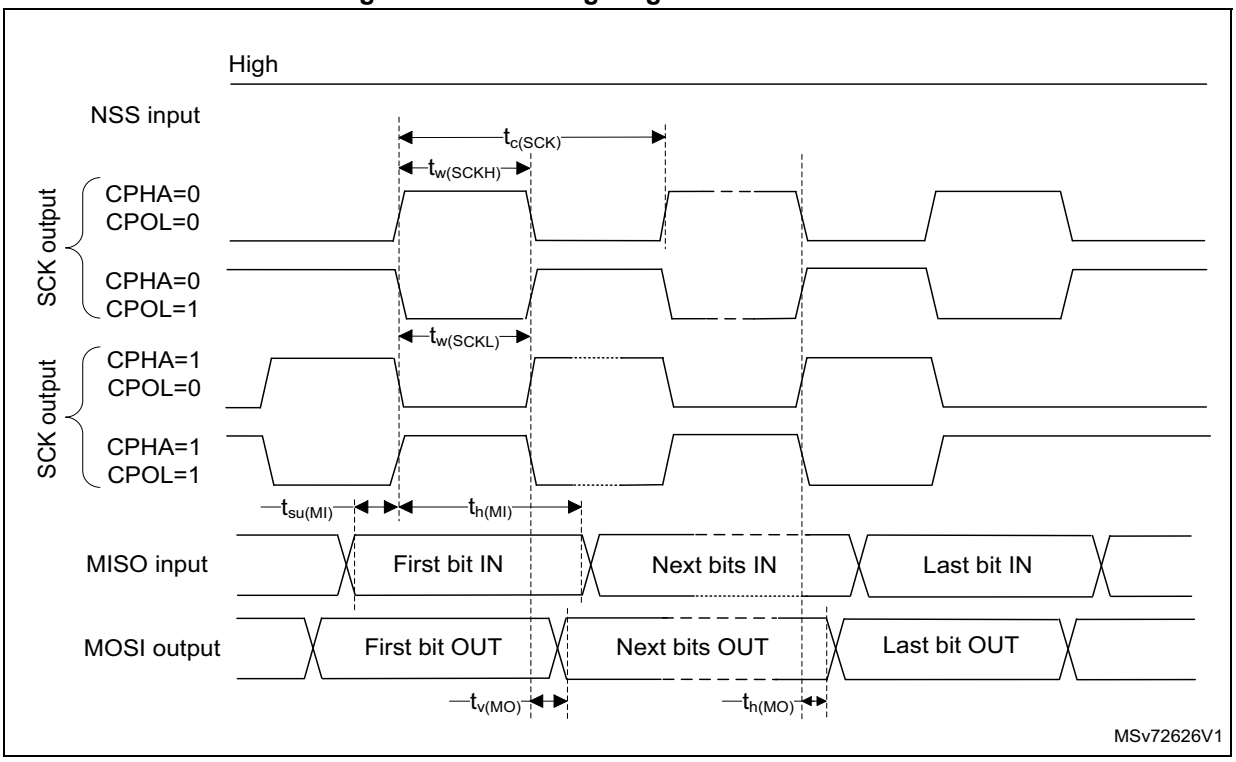

I^2S interface characteristics

Unless otherwise specified, the parameters given in *Table 87* for the I^2S interface are derived from tests performed under the ambient temperature, f_{PCLKx} frequency and V_{DD} supply voltage conditions summarized in *Table 17*, with the following configuration:

- Output speed is set to OSPEEDRy[1:0] = 10
- Capacitive load C = 30 pF
- Measurement points are done at CMOS levels: $0.5V_{DD}$

Refer to *Section 6.3.20: I/O port characteristics* for more details on the input/output alternate function characteristics (CK, SD, WS).

Table 87. I^2S dynamic characteristics(1)

Symbol	Parameter	Conditions	Min	Max	Unit
f_{MCK}	I2S Main clock output	-	256x8K	256xFs(2)	MHz
f_{CK}	I2S clock frequency	Master data	-	64xFs	MHz
		Slave data	-	64xFs	
D_{CK}	I2S clock frequency duty cycle	Slave receiver	30	70	%
$t_{v(WS)}$	WS valid time	Master mode	-	3	ns
$t_{h(WS)}$	WS hold time	Master mode	0	-	
$t_{su(WS)}$	WS setup time	Slave mode	5	-	
$t_{h(WS)}$	WS hold time	Slave mode	2	-	
$t_{su(SD_MR)}$	Data input setup time	Master receiver	2.5	-	
$t_{su(SD_SR)}$		Slave receiver	2.5	-	
$t_{h(SD_MR)}$	Data input hold time	Master receiver	3.5	-	
$t_{h(SD_SR)}$		Slave receiver	2	-	
$t_{v(SD_ST)}$	Data output valid time	Slave transmitter (after enable edge)	-	12	
$t_{v(SD_MT)}$		Master transmitter (after enable edge)	-	3	
$t_{h(SD_ST)}$	Data output hold time	Slave transmitter (after enable edge)	5	-	
$t_{h(SD_MT)}$		Master transmitter (after enable edge)	0	-	

1. Guaranteed by characterization results.
2. The maximum value of 256xFs is 49.152 MHz (APB1 maximum frequency).

*Note: Refer to RM0410 reference manual I2S section for more details about the sampling frequency (F_S). f_{MCK}, f_{CK}, and D_{CK} values reflect only the digital peripheral behavior. The values of these parameters might be slightly impacted by the source clock precision. D_{CK} depends mainly on the value of ODD bit. The digital contribution leads to a minimum value of (I2SDIV/(2*I2SDIV+ODD) and a maximum value of (I2SDIV+ODD)/(2*I2SDIV+ODD). F_S maximum value is supported for each mode/condition.*

Figure 49. I²S slave timing diagram (Philips protocol)(1)

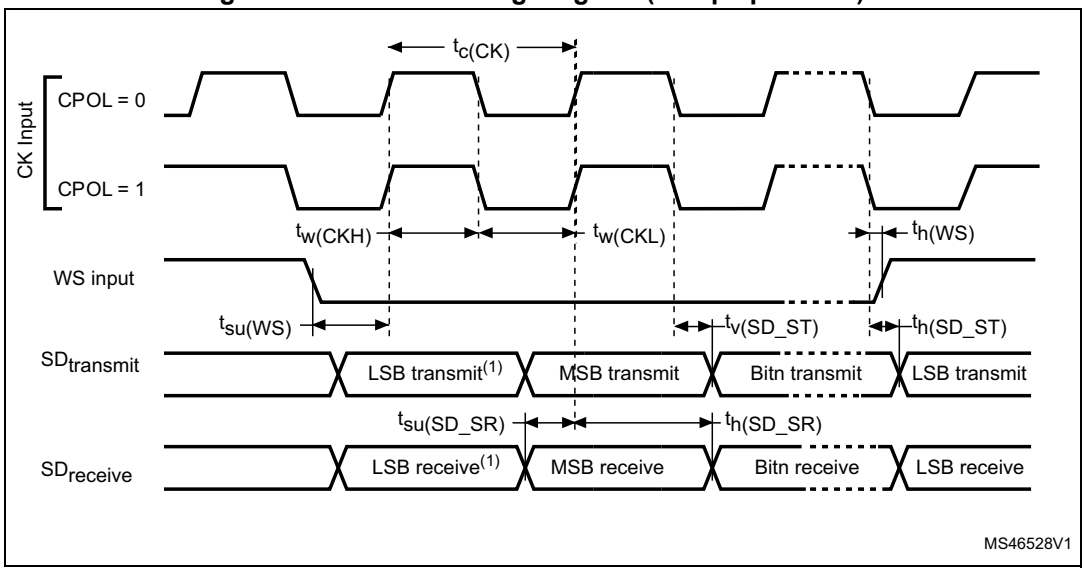

1. LSB transmit/receive of the previously transmitted byte. No LSB transmit/receive is sent before the first byte.

Figure 50. I²S master timing diagram (Philips protocol)(1)

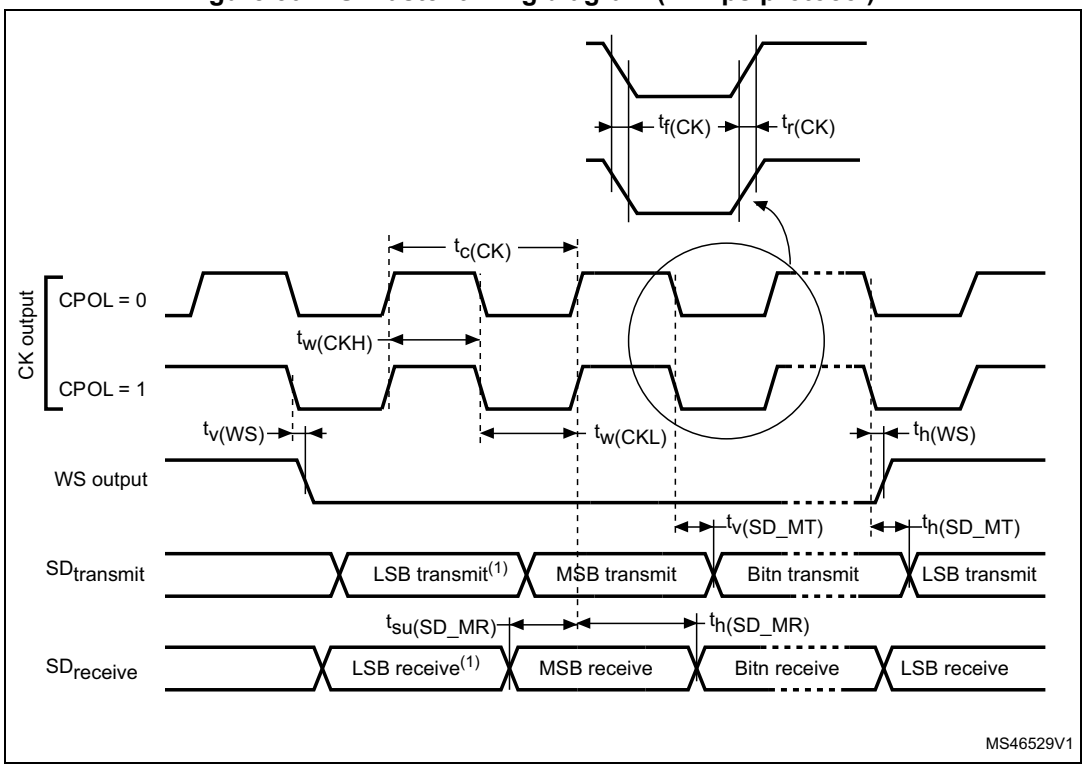

1. LSB transmit/receive of the previously transmitted byte. No LSB transmit/receive is sent before the first byte.

JATG/SWD characteristics

Unless otherwise specified, the parameters given in *Table 88* for JTAG/SWD are derived from tests performed under the ambient temperature, f_{HCLK} frequency and VDD supply voltage conditions summarized in *Table 17*, with the following configuration:

- Output speed is set to OSPEEDRy[1:0] = 10
- Capacitive load C=30 pF
- Measurement points are performed at CMOS levels: $0.5V_{DD}$

Refer to *Section 6.3.20: I/O port characteristics* for more details on the input/output alternate function characteristics (SCK,SD,WS).

Table 88. Dynamics characteristics: JTAG characteristics

Symbol	Parameter	Conditions	Min	Typ	Max	Unit
F_{pp}	TCK clock frequency	2.7V <VDD< 3.6V	-	-	40	MHz
$1/t_{c(TCK)}$		1.71 <VDD< 3.6V	-	-	35	
$t_{w(TCKH)}$	SCK high and low time	-	$T_{PCLK} - 1$	T_{PCLK}	$T_{PCLK} + 1$	ns
$t_{w(TCKL)}$						
$t_{su(TMS)}$	TMS input setup time	-	3	-	-	
$t_{h(TMS)}$	TMS input hold time	-	0	-	-	
$t_{su(TDI)}$	TDI input setup time	-	0.5	-	-	
$t_{h(TDI)}$	TDI input hold time	-	2	-	-	
$t_{ov\ (TDO)}$	TDO output valid time	2.7V <VDD< 3.6V	-	9	11	
		1.71 <VDD< 3.6V	-	9	13	
$t_{oh(TDO)}$	TDO output hold time	-	7.5	-	-	

Table 89. Dynamics characteristics: SWD characteristics

Symbol	Parameter	Conditions	Min	Typ	Max	Unit
F_{pp}	SWCLK clock frequency	2.7V <VDD< 3.6V	-	-	80	MHz
$1/t_{c(SWCLK)}$		1.71 <VDD< 3.6V	-	-	50	
$t_{w(SWCLKH)}$	SCK high and low time	-	$T_{PCLK} - 1$	T_{PCLK}	$T_{PCLK} + 1$	ns
$t_{w(SWCLKL)}$						
$t_{su(SWDIO)}$	SWDIO input setup time	-	3.5	-	-	
$t_{h(SWDIO)}$	SWDIO input hold time	-	0	-	-	
$t_{ov\ (SWDIO)}$	SWDIO output valid time	2.7V <VDD< 3.6V	-	11	12	
		1.71 <VDD< 3.6V	-	11	16.5	
$t_{oh(SWDIO)}$	SWDIO output hold time	-	9	-	-	

JTAG/SWD timing diagrams

Figure 51. JTAG timing diagram

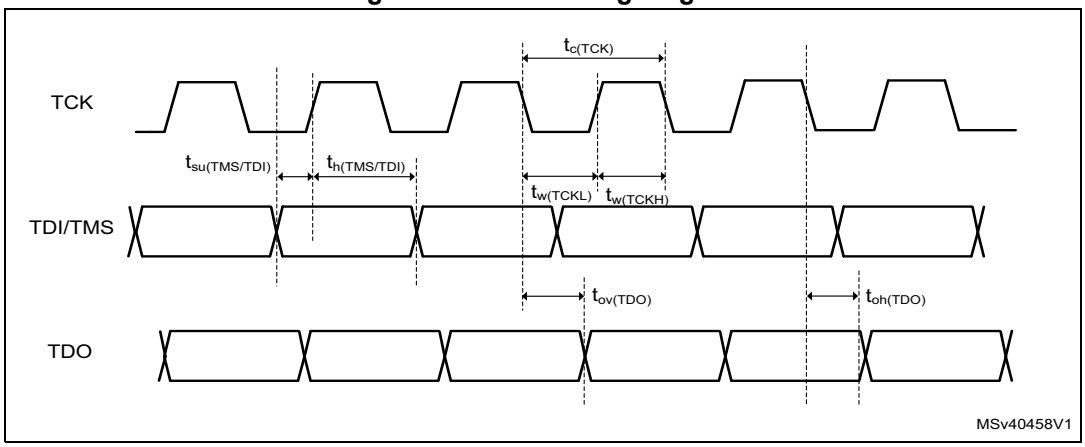

Figure 52. SWD timing diagram

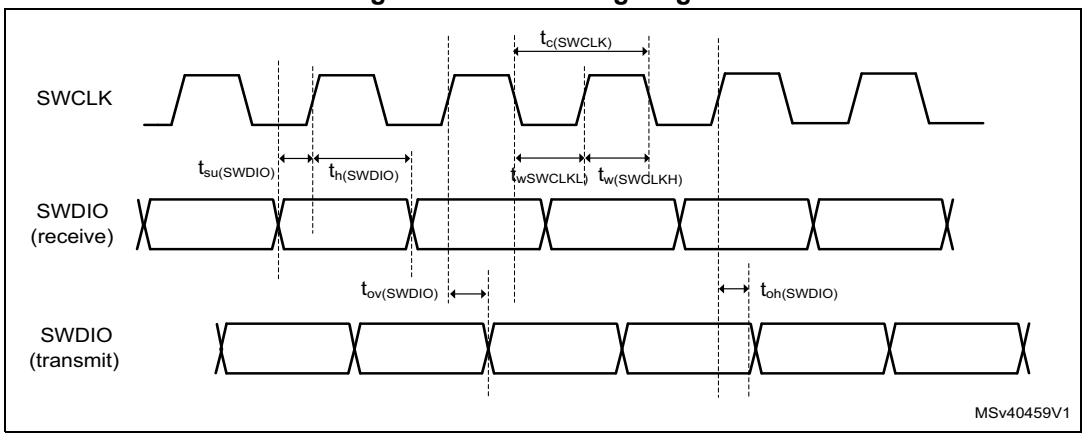

SAI characteristics:

Unless otherwise specified, the parameters given in *Table 90* for SAI are derived from tests performed under the ambient temperature, f_{PCLKx} frequency and VDD supply voltage conditions summarized in *Table 17*, with the following configuration:

- Output speed is set to OSPEEDRy[1:0] = 10
- Capacitive load C=30 pF
- Measurement points are performed at CMOS levels: $0.5V_{DD}$

Refer to *Section 6.3.20: I/O port characteristics* for more details on the input/output alternate function characteristics (SCK,SD,WS).

Table 90. SAI characteristics(1)

Symbol	Parameter	Conditions	Min	Max	Unit
f_{MCK}	SAI Main clock output	-	256 x 8K	256xFs	MHz
F_{CK}	SAI clock frequency(2)	Master data: 32 bits	-	128xFs(3)	MHz
		Slave data: 32 bits	-	128xFs	
$t_{v(FS)}$	FS valid time	Master mode 2.7≤VDD≤3.6V	-	15	ns
		Master mode 1.71≤VDD≤3.6V	-	20	
$t_{su(FS)}$	FS setup time	Slave mode	7	-	
$t_{h(FS)}$	FS hold time	Master mode	1	-	
		Slave mode	1	-	
$t_{su(SD_A_MR)}$	Data input setup time	Master receiver	3	-	
$t_{su(SD_B_SR)}$		Slave receiver	3.5	-	
$t_{h(SD_A_MR)}$	Data input hold time	Master receiver	5	-	
$t_{h(SD_B_SR)}$		Slave receiver	1	-	

Table 90. SAI characteristics(1) (continued)

Symbol	Parameter	Conditions	Min	Max	Unit
$t_{v(SD_B_ST)}$	Data output valid time	Slave transmitter (after enable edge) 2.7≤VDD≤3.6V	-	12	ns
		Slave transmitter (after enable edge) 1.71≤VDD≤3.6V	-	20	
$t_{h(SD_B_MT)}$	Data output hold time	Slave transmitter (after enable edge)	5	-	
$t_{v(SD_MT)_A}$	Data output valid time	Master transmitter (after enable edge) 2.7≤VDD≤3.6V	-	15	
		Master transmitter (after enable edge) 1.71≤VDD≤3.6V	-	20	
$t_{h(SD_A_MT)}$	Data output hold time	Master transmitter (after enable edge)	5	-	

1. Guaranteed by characterization results.
2. APB clock frequency must be at least twice SAI clock frequency.
3. With F_S=192kHz.

Figure 53. SAI master timing waveforms

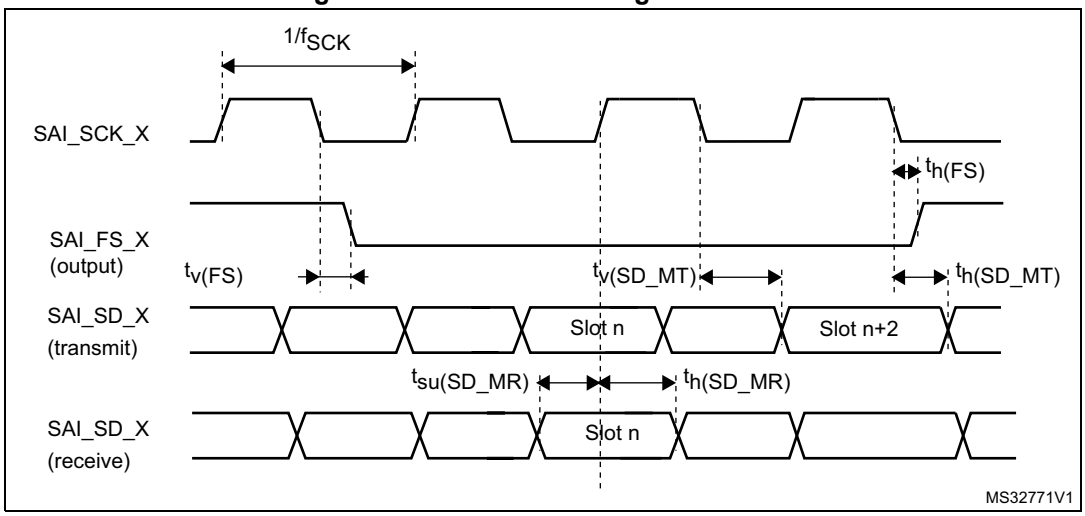

Figure 54. SAI slave timing waveforms

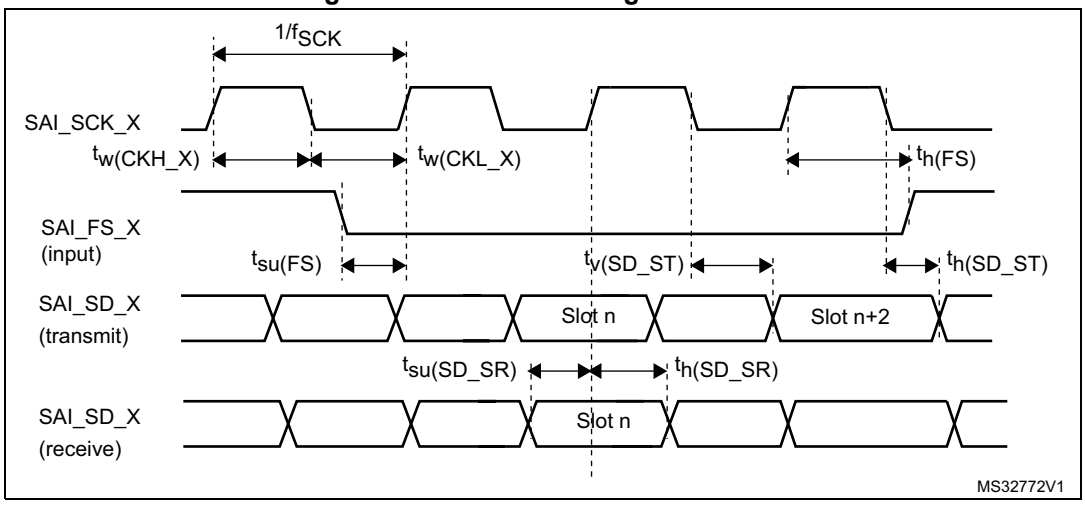

USB OTG full speed (FS) characteristics

This interface is present in both the USB OTG HS and USB OTG FS controllers.

Table 91. USB OTG full speed startup time

Symbol	Parameter	Max	Unit
$t_{STARTUP}$(1)	USB OTG full speed transceiver startup time	1	µs

1. Guaranteed by design.

Table 92. USB OTG full speed DC electrical characteristics

Symbol		Parameter	Conditions	Min. (1)	Typ.	Max. (1)	Unit
Input levels	V_{DDUSB}	USB OTG full speed transceiver operating voltage	-	3.0(2)	-	3.6	V
	V_{DI}(3)	Differential input sensitivity	I(USB_FS_DP/DM, USB_HS_DP/DM)	0.2	-	-	V
	V_{CM}(3)	Differential common mode range	Includes V_{DI} range	0.8	-	2.5	
	V_{SE}(3)	Single ended receiver threshold	-	1.3	-	2.0	
Output levels	V_{OL}	Static output level low	R_L of 1.5 kΩ to 3.6 V(4)	-	-	0.3	V
	V_{OH}	Static output level high	R_L of 15 kΩ to V_{SS}(4)	2.8	-	3.6	

Table 92. USB OTG full speed DC electrical characteristics (continued)

Symbol	Parameter	Conditions	Min. (1)	Typ.	Max. (1)	Unit
R_{PD}	PA11, PA12, PB14, PB15 (USB_FS_DP/DM, USB_HS_DP/DM)	$V_{IN} = V_{DD}$	17	21	24	kΩ
	PA9, PB13 (OTG_FS_VBUS, OTG_HS_VBUS)		2.4	5.2	8	
R_{PU}	PA12, PB15 (USB_FS_DP, USB_HS_DP)	$V_{IN} = V_{SS}$	1.5	1.8	2.1	
	PA9, PB13 (OTG_FS_VBUS, OTG_HS_VBUS)	$V_{IN} = V_{SS}$	0.55	0.95	1.35	

1. All the voltages are measured from the local ground potential.
2. The USB OTG full speed transceiver functionality is ensured down to 2.7 V but not the full USB full speed electrical characteristics which are degraded in the 2.7-to-3.0 V V_{DDUSB} voltage range.
3. Guaranteed by design.
4. R_L is the load connected on the USB OTG full speed drivers.

Note: When VBUS sensing feature is enabled, PA9 and PB13 should be left at their default state (floating input), not as alternate function. A typical 200 µA current consumption of the sensing block (current to voltage conversion to determine the different sessions) can be observed on PA9 and PB13 when the feature is enabled.

Figure 55. USB OTG full speed timings: definition of data signal rise and fall time

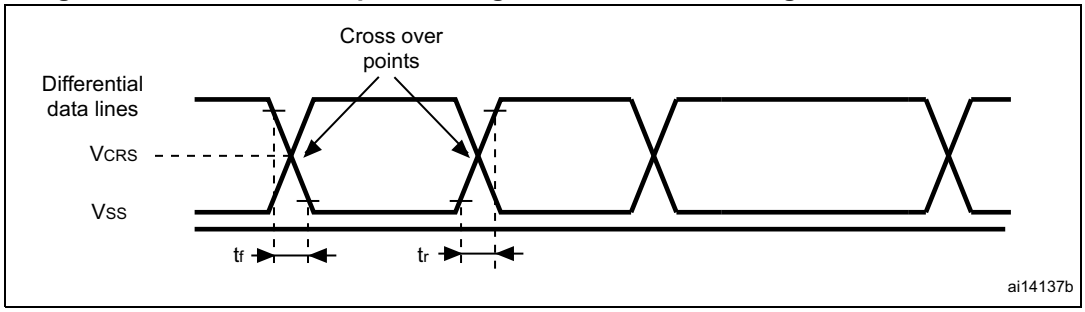

Table 93. USB OTG full speed electrical characteristics(1)

Driver characteristics					
Symbol	**Parameter**	**Conditions**	**Min**	**Max**	**Unit**
t_r	Rise time(2)	C_L = 50 pF	4	20	ns
t_f	Fall time(2)	C_L = 50 pF	4	20	ns
t_{rfm}	Rise/ fall time matching	t_r/t_f	90	110	%
V_{CRS}	Output signal crossover voltage	-	1.3	2.0	V
Z_{DRV}	Output driver impedance(3)	Driving high or low	28	44	Ω

1. Guaranteed by design.

2. Measured from 10% to 90% of the data signal. For more detailed informations, please refer to USB Specification - Chapter 7 (version 2.0).
3. No external termination series resistors are required on DP (D+) and DM (D-) pins since the matching impedance is included in the embedded driver.

USB high speed (HS) characteristics

Unless otherwise specified, the parameters given in *Table 96* for ULPI are derived from tests performed under the ambient temperature, f_{HCLK} frequency summarized in *Table 95* and V_{DD} supply voltage conditions summarized in *Table 94*, with the following configuration:

- Output speed is set to OSPEEDRy[1:0] = 11, unless otherwise specified
- Capacitive load C = 20 pF, unless otherwise specified
- Measurement points are done at CMOS levels: $0.5V_{DD}$.

Refer to *Section 6.3.20: I/O port characteristics* for more details on the input/output characteristics.

Table 94. USB HS DC electrical characteristics

Symbol		Parameter	Min.(1)	Max.(1)	Unit
Input level	V_{DD}	USB OTG HS operating voltage	1.7	3.6	V

1. All the voltages are measured from the local ground potential.

Table 95. USB HS clock timing parameters(1)

Symbol	Parameter		Min	Typ	Max	Unit
-	f_{HCLK} value to guarantee proper operation of USB HS interface		30	-	-	MHz
F_{START_8BIT}	Frequency (first transition)	8-bit ±10%	54	60	66	MHz
F_{STEADY}	Frequency (steady state) ±500 ppm		59.97	60	60.03	MHz
D_{START_8BIT}	Duty cycle (first transition)	8-bit ±10%	40	50	60	%
D_{STEADY}	Duty cycle (steady state) ±500 ppm		49.975	50	50.025	%
t_{STEADY}	Time to reach the steady state frequency and duty cycle after the first transition		-	-	1.4	ms
t_{START_DEV}	Clock startup time after the de-assertion of SuspendM	Peripheral	-	-	5.6	ms
t_{START_HOST}		Host	-	-	-	
t_{PREP}	PHY preparation time after the first transition of the input clock		-	-	-	µs

1. Guaranteed by design.

Figure 56. ULPI timing diagram

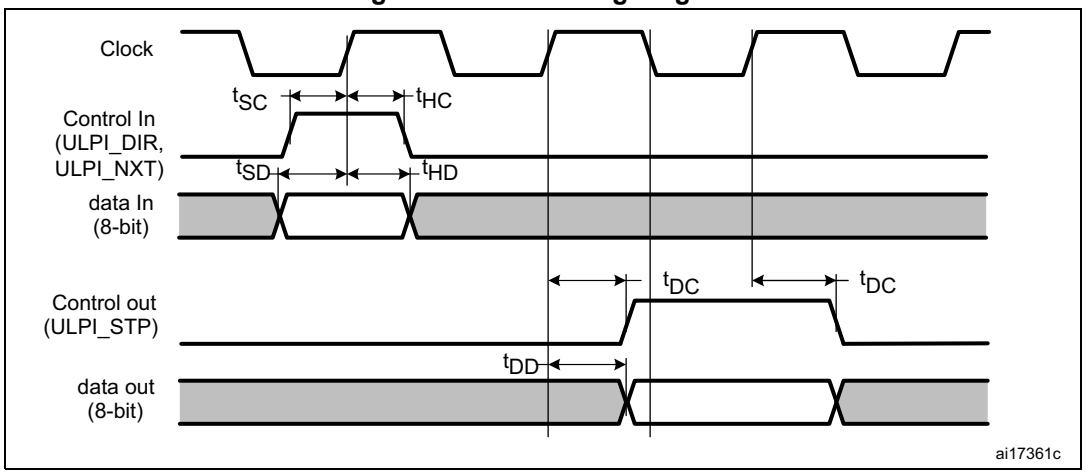

Table 96. Dynamic characteristics: USB ULPI(1)

Symbol	Parameter	Conditions	Min.	Typ.	Max.	Unit
t_{SC}	Control in (ULPI_DIR, ULPI_NXT) setup time	-	2	-	-	ns
t_{HC}	Control in (ULPI_DIR, ULPI_NXT) hold time	-	1.5	-	-	
t_{SD}	Data in setup time	-	2	-	-	
t_{HD}	Data in hold time	-	1	-	-	
t_{DC}/t_{DD}	Data/control output delay	2.7 V < V_{DD} < 3.6 V, C_L = 20 pF	-	6.5	8	
		-	-	6.5	11	
		1.7 V < V_{DD} < 3.6 V, C_L = 15 pF	-			

1. Guaranteed by characterization results.

Ethernet characteristics

Unless otherwise specified, the parameters given in *Table 97*, *Table 98* and *Table 99* for SMI, RMII and MII are derived from tests performed under the ambient temperature, f_{HCLK} frequency summarized in *Table 17*, with the following configuration:

- Output speed is set to OSPEEDRy[1:0] = 10
- Capacitive load C = 20 pF
- Measurement points are done at CMOS levels: $0.5V_{DD}$.

Refer to *Section 6.3.20: I/O port characteristics* for more details on the input/output characteristics.

Table 97 gives the list of Ethernet MAC signals for the SMI (station management interface) and *Figure 57* shows the corresponding timing diagram.

Figure 57. Ethernet SMI timing diagram

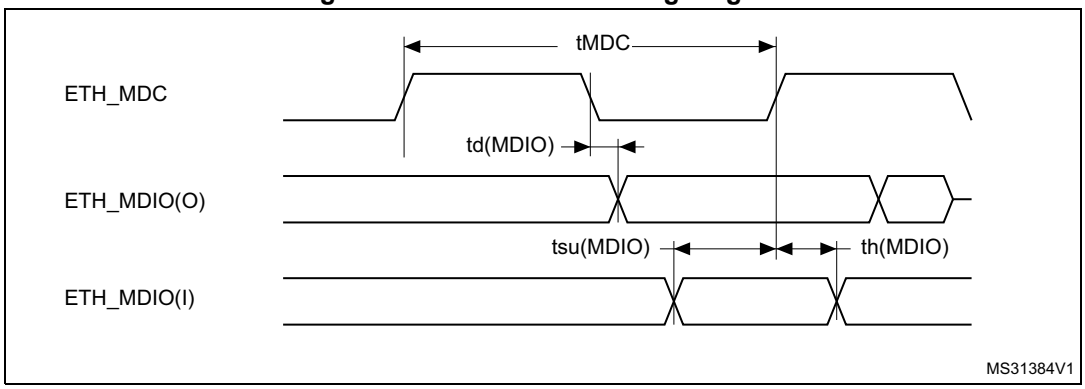

Table 97. Dynamics characteristics: Ethernet MAC signals for SMI(1)

Symbol	Parameter	Min	Typ	Max	Unit
t_{MDC}	MDC cycle time(2.38 MHz)	400	400	403	ns
$T_{d(MDIO)}$	Write data valid time	T_{HCLK} + 1	T_{HCLK} + 1.5	T_{HCLK} + 3	
$t_{su(MDIO)}$	Read data setup time	12.5	-	-	
$t_{h(MDIO)}$	Read data hold time	0	-	-	

1. Guaranteed by characterization results.

Table 98 gives the list of Ethernet MAC signals for the RMII and *Figure 58* shows the corresponding timing diagram.

Figure 58. Ethernet RMII timing diagram

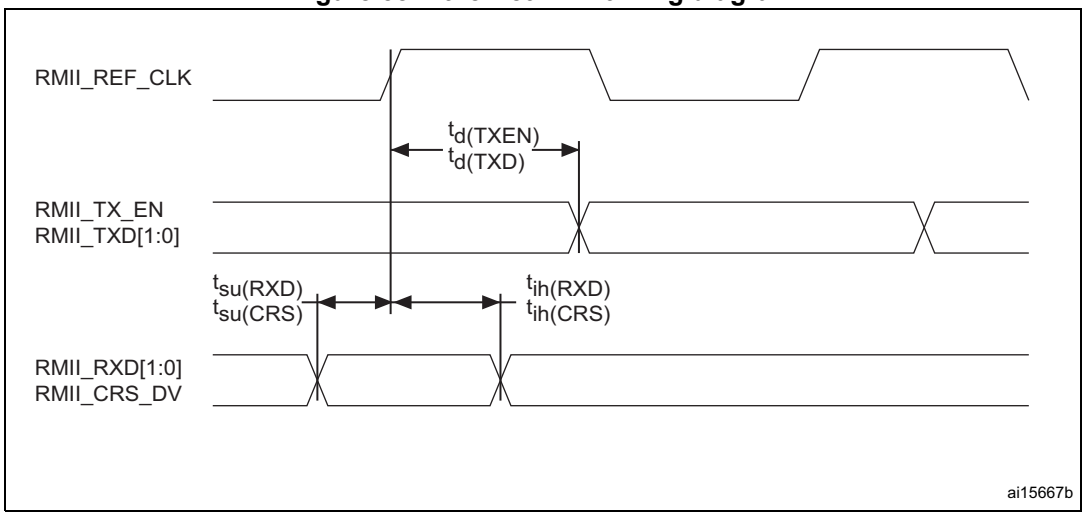

Table 98. Dynamics characteristics: Ethernet MAC signals for RMII(1)

Symbol	Parameter	Min	Typ	Max	Unit
$t_{su(RXD)}$	Receive data setup time	1	-	-	ns
$t_{ih(RXD)}$	Receive data hold time	2	-	-	
$t_{su(CRS)}$	Carrier sense setup time	2	-	-	
$t_{ih(CRS)}$	Carrier sense hold time	2	-	-	
$t_{d(TXEN)}$	Transmit enable valid delay time	7.5	8	12	
$t_{d(TXD)}$	Transmit data valid delay time	7	7.5	12.5	

1. Guaranteed by characterization results.

Table 99 gives the list of Ethernet MAC signals for MII and *Figure 58* shows the corresponding timing diagram.

Figure 59. Ethernet MII timing diagram

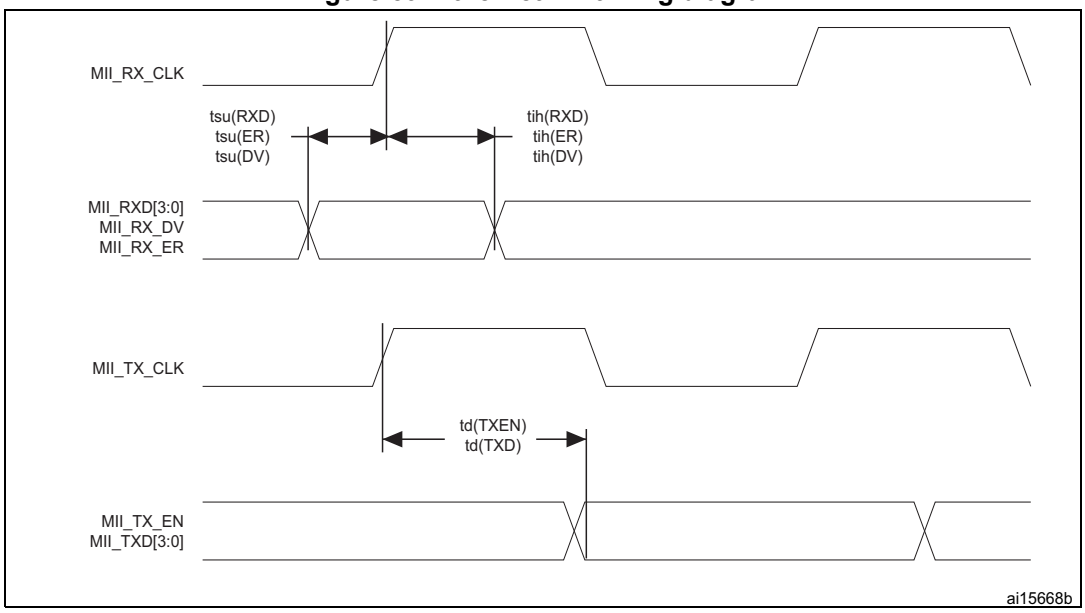

Table 99. Dynamics characteristics: Ethernet MAC signals for MII(1)

Symbol	Parameter	Min	Typ	Max	Unit
$t_{su(RXD)}$	Receive data setup time	1	-	-	ns
$t_{ih(RXD)}$	Receive data hold time	2.5	-	-	
$t_{su(DV)}$	Data valid setup time	1.5	-	-	
$t_{ih(DV)}$	Data valid hold time	0.5	-	-	
$t_{su(ER)}$	Error setup time	2.5	-	-	
$t_{ih(ER)}$	Error hold time	0.5	-	-	
$t_{d(TXEN)}$	Transmit enable valid delay time	8	10	13	
$t_{d(TXD)}$	Transmit data valid delay time	7.5	9	13	

1. Guaranteed by characterization results.

Table 100. MDIO Slave timing parameters

Symbol	Parameter	Min	Typ	Max	Unit
F_{sDC}	Management Data clock	-	-	40	MHz
$t_{d(MDIO)}$	Management Data input/output **output valid time**	7	8	20	ns
$t_{su(MDIO)}$	Management Data input/output **setup time**	4	-	-	
$t_{h(MDIO)}$	Management Data input/output **hold time**	1	-	-	

The MDIO controller is mapped on APB2 domain. The frequency of the APB bus should at least 1.5 times the MDC frequency: $F_{PCLK2} \geq 1.5 * F_{MDC}$

Figure 60. MDIO Slave timing diagram

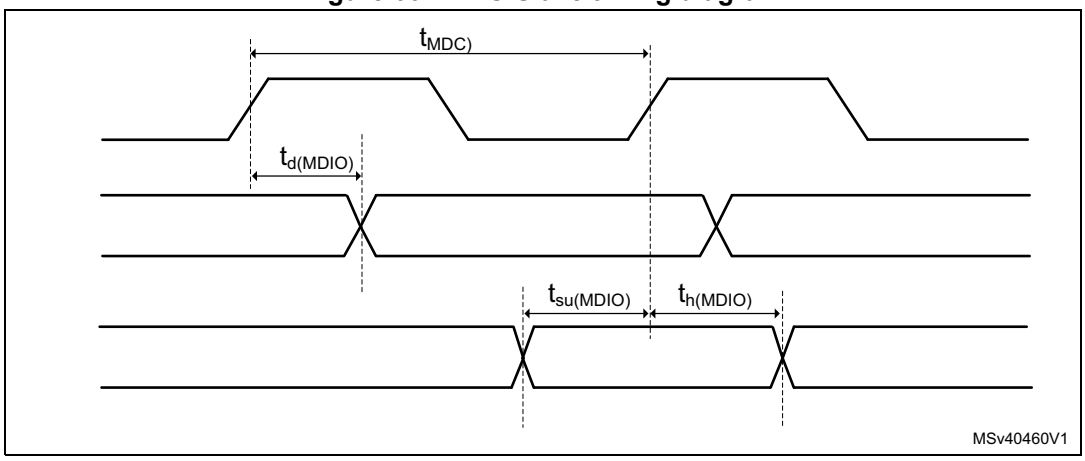

CAN (controller area network) interface

Refer to *Section 6.3.20: I/O port characteristics* for more details on the input/output alternate function characteristics (CANx_TX and CANx_RX).

6.3.30 FMC characteristics

Unless otherwise specified, the parameters given in *Table 101* to *Table 114* for the FMC interface are derived from tests performed under the ambient temperature, f_{HCLK} frequency and V_{DD} supply voltage conditions summarized in *Table 17*, with the following configuration:

- Output speed is set to OSPEEDRy[1:0] = 11
- Measurement points are done at CMOS levels: $0.5V_{DD}$

Refer to *Section 6.3.20: I/O port characteristics* for more details on the input/output characteristics.

Asynchronous waveforms and timings

Figure 61 through *Figure 64* represent asynchronous waveforms and *Table 101* through *Table 108* provide the corresponding timings. The results shown in these tables are obtained with the following FMC configuration:

- AddressSetupTime = 0x1
- AddressHoldTime = 0x1
- DataSetupTime = 0x1 (except for asynchronous NWAIT mode , DataSetupTime = 0x5)
- BusTurnAroundDuration = 0x0
- Capcitive load CL = 30 pF

In all timing tables, the T_{HCLK} is the HCLK clock period

Figure 61. Asynchronous non-multiplexed SRAM/PSRAM/NOR read waveforms

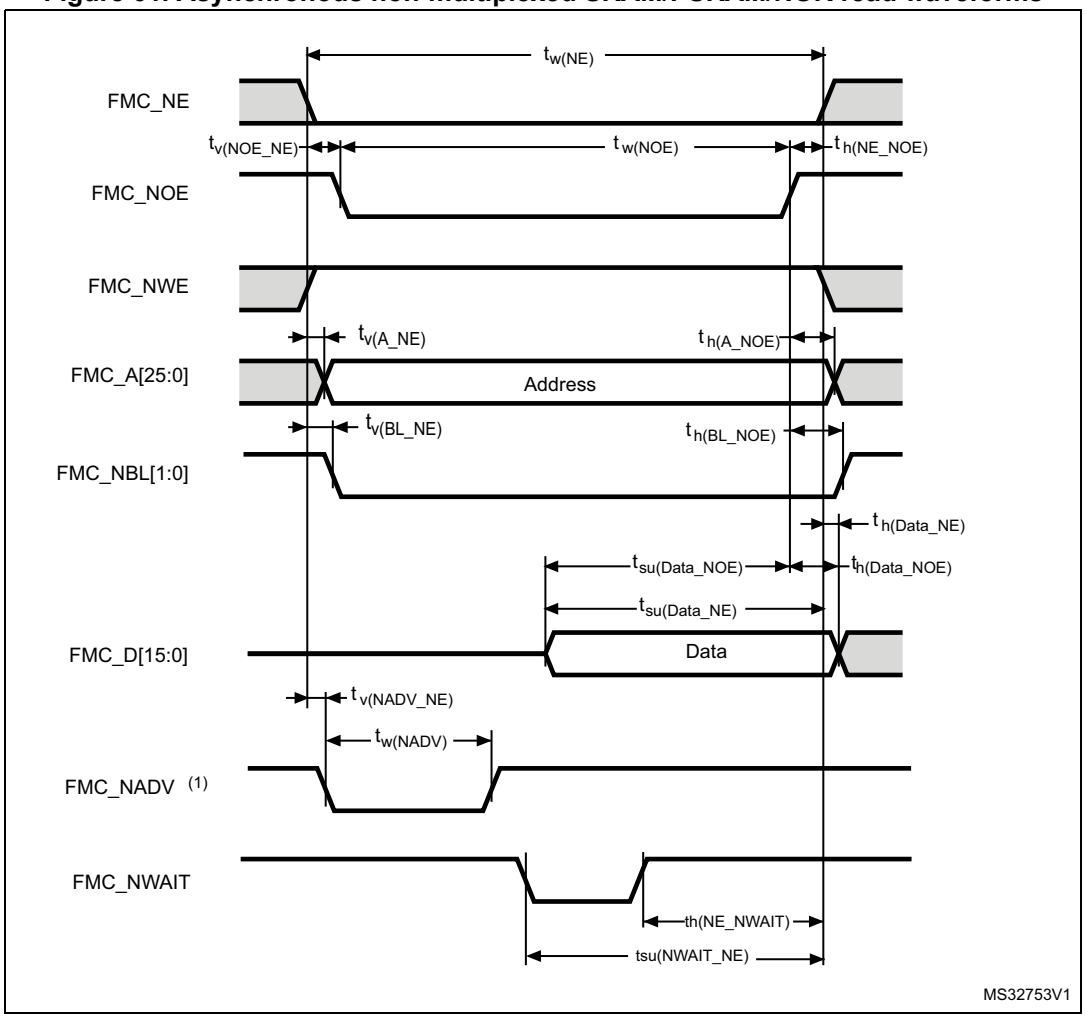

1. Mode 2/B, C and D only. In Mode 1, FMC_NADV is not used.

Table 101. Asynchronous non-multiplexed SRAM/PSRAM/NOR read timings(1)(2)

Symbol	Parameter	Min	Max	Unit
$t_{w(NE)}$	FMC_NE low time	$2T_{HCLK} - 1$	$2\ T_{HCLK} + 1$	ns
$t_{v(NOE_NE)}$	FMC_NEx low to FMC_NOE low	0	0.5	
$t_{w(NOE)}$	FMC_NOE low time	$2T_{HCLK} - 1$	$2T_{HCLK} + 1$	
$t_{h(NE_NOE)}$	FMC_NOE high to FMC_NE high hold time	0	-	
$t_{v(A_NE)}$	FMC_NEx low to FMC_A valid	-	0.5	
$t_{h(A_NOE)}$	Address hold time after FMC_NOE high	0	-	
$t_{v(BL_NE)}$	FMC_NEx low to FMC_BL valid	-	0.5	
$t_{h(BL_NOE)}$	FMC_BL hold time after FMC_NOE high	0	-	
$t_{su(Data_NE)}$	Data to FMC_NEx high setup time	$T_{HCLK} - 1$	-	
$t_{su(Data_NOE)}$	Data to FMC_NOEx high setup time	$T_{HCLK} - 1$	-	
$t_{h(Data_NOE)}$	Data hold time after FMC_NOE high	0	-	
$t_{h(Data_NE)}$	Data hold time after FMC_NEx high	0	-	
$t_{v(NADV_NE)}$	FMC_NEx low to FMC_NADV low	-	0	
$t_{w(NADV)}$	FMC_NADV low time	-	$T_{HCLK} + 1$	

1. C_L = 30 pF.
2. Guaranteed by characterization results.

Table 102. Asynchronous non-multiplexed SRAM/PSRAM/NOR read - NWAIT timings(1)

Symbol	Parameter	Min	Max	Unit
$t_{w(NE)}$	FMC_NE low time	$7T_{HCLK} + 1$	$7T_{HCLK} + 1$	ns
$t_{w(NOE)}$	FMC_NWE low time	$5T_{HCLK} - 1$	$5T_{HCLK} + 1$	
$t_{w(NWAIT)}$	FMC_NWAIT low time	$T_{HCLK} - 0.5$	-	
$t_{su(NWAIT_NE)}$	FMC_NWAIT valid before FMC_NEx high	$5T_{HCLK} + 1.5$	-	
$t_{h(NE_NWAIT)}$	FMC_NEx hold time after FMC_NWAIT invalid	$4T_{HCLK} + 1$	-	

1. Guaranteed by characterization results.

Figure 62. Asynchronous non-multiplexed SRAM/PSRAM/NOR write waveforms

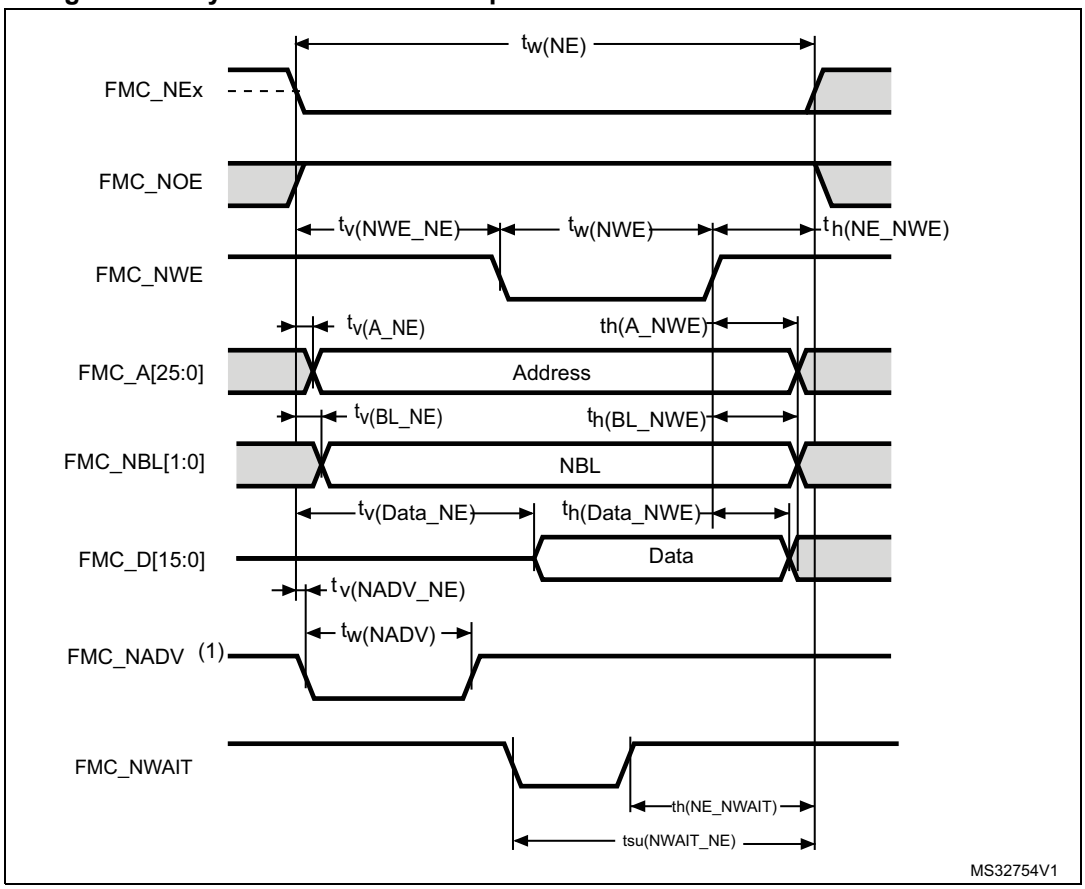

1. Mode 2/B, C and D only. In Mode 1, FMC_NADV is not used.

Table 103. Asynchronous non-multiplexed SRAM/PSRAM/NOR write timings(1)

Symbol	Parameter	Min	Max	Unit
$t_{w(NE)}$	FMC_NE low time	$3T_{HCLK} - 1$	$3T_{HCLK} + 1$	ns
$t_{v(NWE_NE)}$	FMC_NEx low to FMC_NWE low	$T_{HCLK} - 1$	$T_{HCLK} + 0.5$	
$t_{w(NWE)}$	FMC_NWE low time	$T_{HCLK} - 1.5$	$T_{HCLK} + 0.5$	
$t_{h(NE_NWE)}$	FMC_NWE high to FMC_NE high hold time	T_{HCLK}	-	
$t_{v(A_NE)}$	FMC_NEx low to FMC_A valid	-	0	
$t_{h(A_NWE)}$	Address hold time after FMC_NWE high	$T_{HCLK} - 0.5$	-	
$t_{v(BL_NE)}$	FMC_NEx low to FMC_BL valid	-	0.5	
$t_{h(BL_NWE)}$	FMC_BL hold time after FMC_NWE high	$T_{HCLK} - 0.5$	-	
$t_{v(Data_NE)}$	Data to FMC_NEx low to Data valid	-	$T_{HCLK} + 2$	
$t_{h(Data_NWE)}$	Data hold time after FMC_NWE high	$T_{HCLK}+0.5$	-	
$t_{v(NADV_NE)}$	FMC_NEx low to FMC_NADV low	-	0	
$t_{w(NADV)}$	FMC_NADV low time	-	$T_{HCLK} + 1$	

1. Guaranteed by characterization results.

Table 104. Asynchronous non-multiplexed SRAM/PSRAM/NOR write - NWAIT timings(1)

Symbol	Parameter	Min	Max	Unit
$t_{w(NE)}$	FMC_NE low time	$8T_{HCLK} - 1$	$8T_{HCLK} + 1$	ns
$t_{w(NWE)}$	FMC_NWE low time	$6T_{HCLK} - 1.5$	$6T_{HCLK} + 0.5$	
$t_{su(NWAIT_NE)}$	FMC_NWAIT valid before FMC_NEx high	$6T_{HCLK} - 1$	-	
$t_{h(NE_NWAIT)}$	FMC_NEx hold time after FMC_NWAIT invalid	$4T_{HCLK} + 2$	-	

1. Guaranteed by characterization results.

Figure 63. Asynchronous multiplexed PSRAM/NOR read waveforms

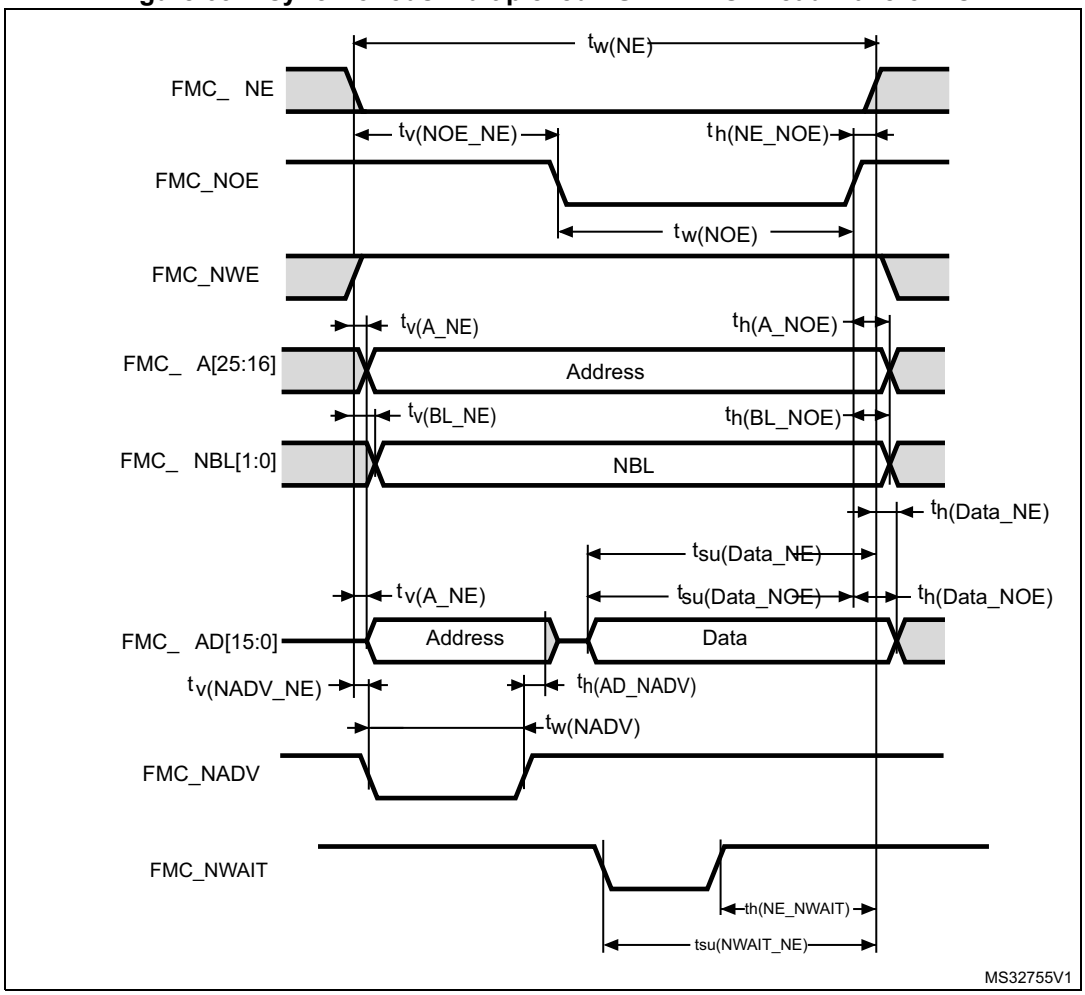

Table 105. Asynchronous multiplexed PSRAM/NOR read timings(1)

Symbol	Parameter	Min	Max	Unit
$t_{w(NE)}$	FMC_NE low time	$3T_{HCLK} - 1$	$3T_{HCLK} + 1$	ns
$t_{v(NOE_NE)}$	FMC_NEx low to FMC_NOE low	$2T_{HCLK}$	$2T_{HCLK} + 0.5$	
$t_{tw(NOE)}$	FMC_NOE low time	$T_{HCLK} - 1$	$T_{HCLK} + 1$	
$t_{h(NE_NOE)}$	FMC_NOE high to FMC_NE high hold time	0	-	
$t_{v(A_NE)}$	FMC_NEx low to FMC_A valid	-	0.5	
$t_{v(NADV_NE)}$	FMC_NEx low to FMC_NADV low	0	0.5	
$t_{w(NADV)}$	FMC_NADV low time	$T_{HCLK} - 0.5$	$T_{HCLK}+1$	
$t_{h(AD_NADV)}$	FMC_AD(address) valid hold time after FMC_NADV high)	$T_{HCLK} + 0.5$	-	
$t_{h(A_NOE)}$	Address hold time after FMC_NOE high	$T_{HCLK} - 0.5$	-	
$t_{h(BL_NOE)}$	FMC_BL time after FMC_NOE high	0	-	
$t_{v(BL_NE)}$	FMC_NEx low to FMC_BL valid	-	0.5	
$t_{su(Data_NE)}$	Data to FMC_NEx high setup time	$T_{HCLK} - 1$	-	
$t_{su(Data_NOE)}$	Data to FMC_NOE high setup time	$T_{HCLK} - 1$	-	
$t_{h(Data_NE)}$	Data hold time after FMC_NEx high	0	-	
$t_{h(Data_NOE)}$	Data hold time after FMC_NOE high	0	-	

1. Guaranteed by characterization results.

Table 106. Asynchronous multiplexed PSRAM/NOR read-NWAIT timings(1)

Symbol	Parameter	Min	Max	Unit
$t_{w(NE)}$	FMC_NE low time	$8T_{HCLK} - 1$	$8T_{HCLK} + 1$	ns
$t_{w(NOE)}$	FMC_NWE low time	$5T_{HCLK} - 1.5$	$5T_{HCLK} + 0.5$	
$t_{su(NWAIT_NE)}$	FMC_NWAIT valid before FMC_NEx high	$5T_{HCLK} + 1.5$	-	
$t_{h(NE_NWAIT)}$	FMC_NEx hold time after FMC_NWAIT invalid	$4T_{HCLK}+ 1$	-	

1. Guaranteed by characterization results.

Figure 64. Asynchronous multiplexed PSRAM/NOR write waveforms

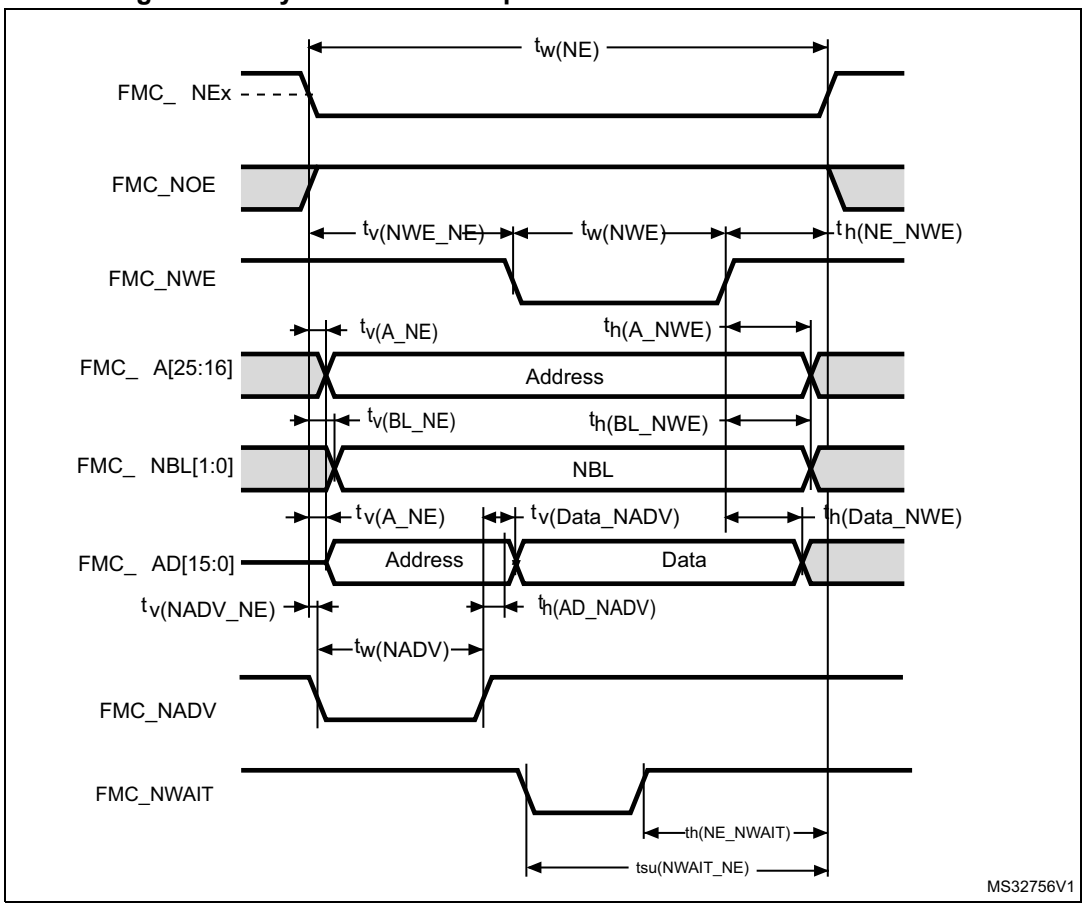

Table 107. Asynchronous multiplexed PSRAM/NOR write timings(1)

Symbol	Parameter	Min	Max	Unit
$t_{w(NE)}$	FMC_NE low time	$4T_{HCLK} - 1$	$4T_{HCLK} + 1$	ns
$t_{v(NWE_NE)}$	FMC_NEx low to FMC_NWE low	$T_{HCLK} - 1$	$T_{HCLK} + 0.5$	
$t_{w(NWE)}$	FMC_NWE low time	$2T_{HCLK} - 0.5$	$2T_{HCLK} + 0.5$	
$t_{h(NE_NWE)}$	FMC_NWE high to FMC_NE high hold time	$T_{HCLK} - 0.5$	-	
$t_{v(A_NE)}$	FMC_NEx low to FMC_A valid	-	0	
$t_{v(NADV_NE)}$	FMC_NEx low to FMC_NADV low	0	0.5	
$t_{w(NADV)}$	FMC_NADV low time	T_{HCLK}	$T_{HCLK} + 1$	
$t_{h(AD_NADV)}$	FMC_AD(adress) valid hold time after FMC_NADV high)	$T_{HCLK} - 0.5$	-	
$t_{h(A_NWE)}$	Address hold time after FMC_NWE high	$T_{HCLK} + 0.5$	-	
$t_{h(BL_NWE)}$	FMC_BL hold time after FMC_NWE high	$T_{HCLK} - 0.5$	-	
$t_{v(BL_NE)}$	FMC_NEx low to FMC_BL valid	-	0.5	
$t_{v(Data_NADV)}$	FMC_NADV high to Data valid	-	$T_{HCLK} + 2$	
$t_{h(Data_NWE)}$	Data hold time after FMC_NWE high	$T_{HCLK} + 0.5$	-	

1. Guaranteed by characterization results.

Table 108. Asynchronous multiplexed PSRAM/NOR write-NWAIT timings(1)

Symbol	Parameter	Min	Max	Unit
$t_{w(NE)}$	FMC_NE low time	$9T_{HCLK} - 1$	$9T_{HCLK} + 1$	ns
$t_{w(NWE)}$	FMC_NWE low time	$7T_{HCLK} - 0.5$	$7T_{HCLK} + 0.5$	
$t_{su(NWAIT_NE)}$	FMC_NWAIT valid before FMC_NEx high	$6T_{HCLK} + 2$	-	
$t_{h(NE_NWAIT)}$	FMC_NEx hold time after FMC_NWAIT invalid	$4T_{HCLK} - 1$	-	

1. Guaranteed by characterization results.

Synchronous waveforms and timings

Figure 65 through *Figure 68* represent synchronous waveforms and *Table 109* through *Table 112* provide the corresponding timings. The results shown in these tables are obtained with the following FMC configuration:

- BurstAccessMode = FMC_BurstAccessMode_Enable;
- MemoryType = FMC_MemoryType_CRAM;
- WriteBurst = FMC_WriteBurst_Enable;
- CLKDivision = 1;
- DataLatency = 1 for NOR Flash; DataLatency = 0 for PSRAM
- CL = 30 pF on data and address lines. CL = 10 pF on FMC_CLK unless otherwise specified.

In all the timing tables, the T_{HCLK} is the HCLK clock period.

- For 2.7 V≤ V_{DD} ≤ 3.6 V, maximum FMC_CLK = 100 MHz at CL=20 pF or 90 MHz at CL=30 pF (on FMC_CLK).
- For 1.71 V≤ V_{DD}<2.7 V, maximum FMC_CLK = 70 MHz at CL=10 pF (on FMC_CLK).

Figure 65. Synchronous multiplexed NOR/PSRAM read timings

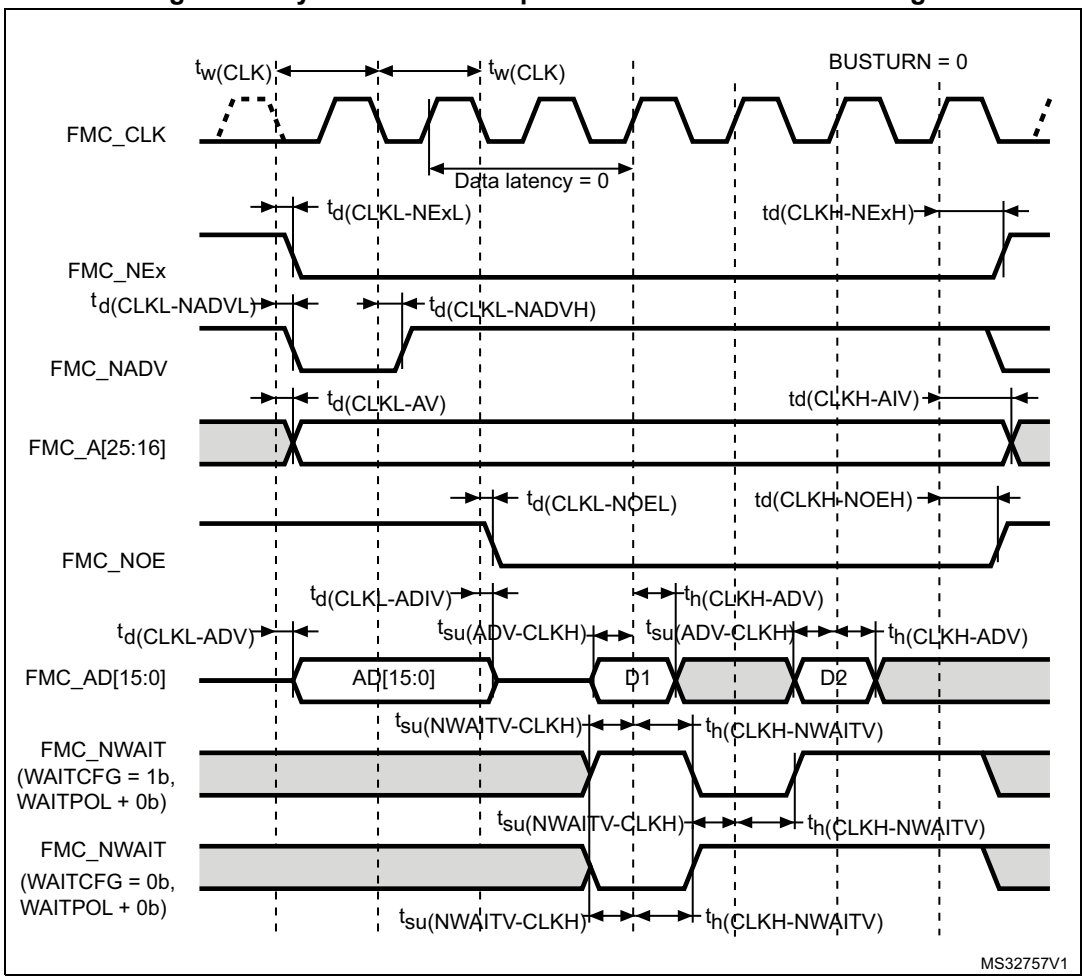

Table 109. Synchronous multiplexed NOR/PSRAM read timings(1)

Symbol	Parameter	Min	Max	Unit
$t_{w(CLK)}$	FMC_CLK period	$2T_{HCLK} - 0.5$	-	ns
$t_{d(CLKL-NExL)}$	FMC_CLK low to FMC_NEx low (x=0..2)	-	2	
$t_{d(CLKH_NExH)}$	FMC_CLK high to FMC_NEx high (x= 0…2)	$T_{HCLK} + 0.5$	-	
$t_{d(CLKL-NADVL)}$	FMC_CLK low to FMC_NADV low	-	1.	
$t_{d(CLKL-NADVH)}$	FMC_CLK low to FMC_NADV high	0	-	
$t_{d(CLKL-AV)}$	FMC_CLK low to FMC_Ax valid (x=16…25)	-	2.5	
$t_{d(CLKH-AIV)}$	FMC_CLK high to FMC_Ax invalid (x=16…25)	T_{HCLK}	-	
$t_{d(CLKL-NOEL)}$	FMC_CLK low to FMC_NOE low	-	1.5	
$t_{d(CLKH-NOEH)}$	FMC_CLK high to FMC_NOE high	$T_{HCLK} - 0.5$	-	
$t_{d(CLKL-ADV)}$	FMC_CLK low to FMC_AD[15:0] valid	-	3	
$t_{d(CLKL-ADIV)}$	FMC_CLK low to FMC_AD[15:0] invalid	0	-	
$t_{su(ADV-CLKH)}$	FMC_A/D[15:0] valid data before FMC_CLK high	2.5	-	
$t_{h(CLKH-ADV)}$	FMC_A/D[15:0] valid data after FMC_CLK high	2.5	-	
$t_{su(NWAIT-CLKH)}$	FMC_NWAIT valid before FMC_CLK high	3	-	
$t_{h(CLKH-NWAIT)}$	FMC_NWAIT valid after FMC_CLK high	2.5	-	

1. Guaranteed by characterization results.

Figure 66. Synchronous multiplexed PSRAM write timings

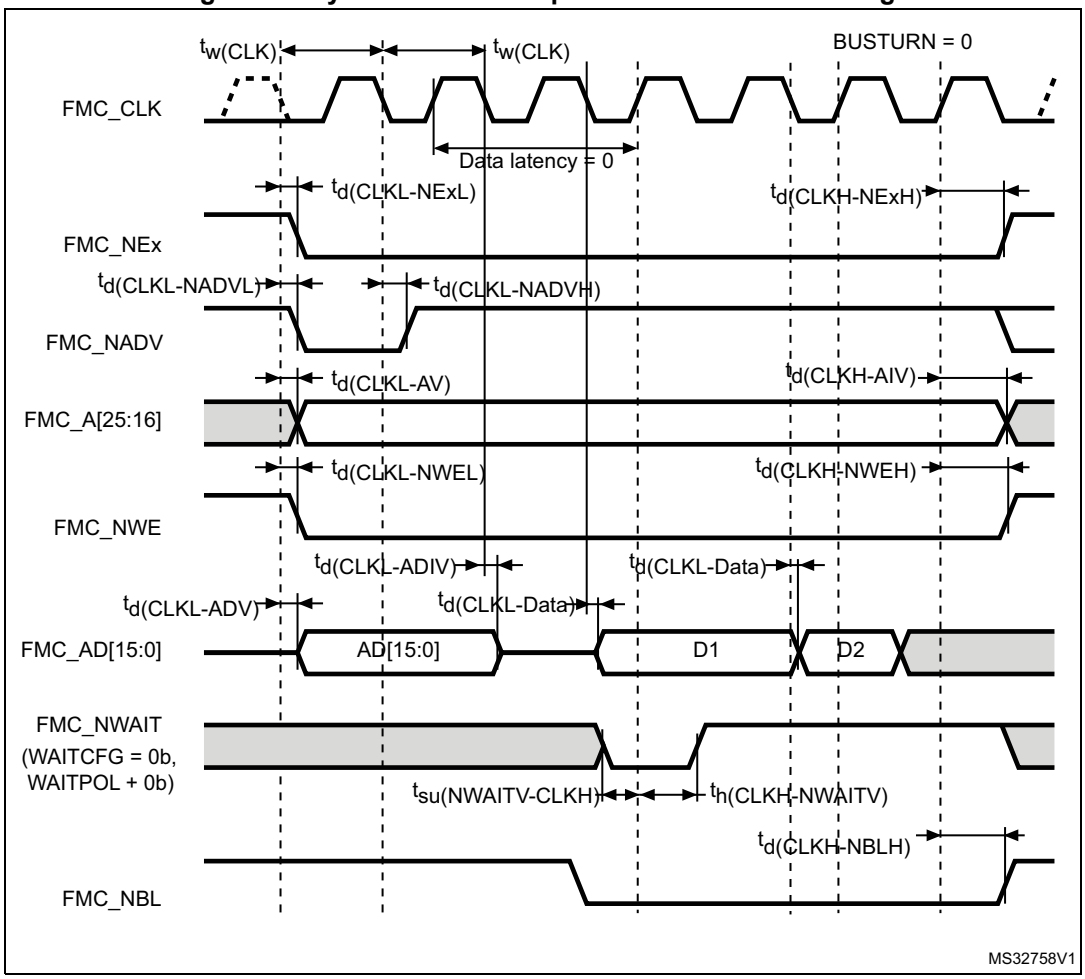

Table 110. Synchronous multiplexed PSRAM write timings[1]

Symbol	Parameter	Min	Max	Unit
$t_{w(CLK)}$	FMC_CLK period	$2T_{HCLK} - 0.5$	-	ns
$t_{d(CLKL-NExL)}$	FMC_CLK low to FMC_NEx low (x=0..2)	-	2	
$t_{d(CLKH-NExH)}$	FMC_CLK high to FMC_NEx high (x= 0…2)	$T_{HCLK} + 0.5$	-	
$t_{d(CLKL-NADVL)}$	FMC_CLK low to FMC_NADV low	-	1	
$t_{d(CLKL-NADVH)}$	FMC_CLK low to FMC_NADV high	0	-	
$t_{d(CLKL-AV)}$	FMC_CLK low to FMC_Ax valid (x=16…25)	-	2 .5	
$t_{d(CLKH-AIV)}$	FMC_CLK high to FMC_Ax invalid (x=16…25)	T_{HCLK}	-	
$t_{d(CLKL-NWEL)}$	FMC_CLK low to FMC_NWE low	-	1.5	
$t_{(CLKH-NWEH)}$	FMC_CLK high to FMC_NWE high	$T_{HCLK} + 0.5$	-	
$t_{d(CLKL-ADV)}$	FMC_CLK low to FMC_AD[15:0] valid	-	3	
$t_{d(CLKL-ADIV)}$	FMC_CLK low to FMC_AD[15:0] invalid	0	-	
$t_{d(CLKL-DATA)}$	FMC_A/D[15:0] valid data after FMC_CLK low	-	3.5	
$t_{d(CLKL-NBLL)}$	FMC_CLK low to FMC_NBL low	-	2	
$t_{d(CLKH-NBLH)}$	FMC_CLK high to FMC_NBL high	$T_{HCLK} + 0.5$	-	
$t_{su(NWAIT-CLKH)}$	FMC_NWAIT valid before FMC_CLK high	2	-	
$t_{h(CLKH-NWAIT)}$	FMC_NWAIT valid after FMC_CLK high	3.5	-	

1. Guaranteed by characterization results.

Figure 67. Synchronous non-multiplexed NOR/PSRAM read timings

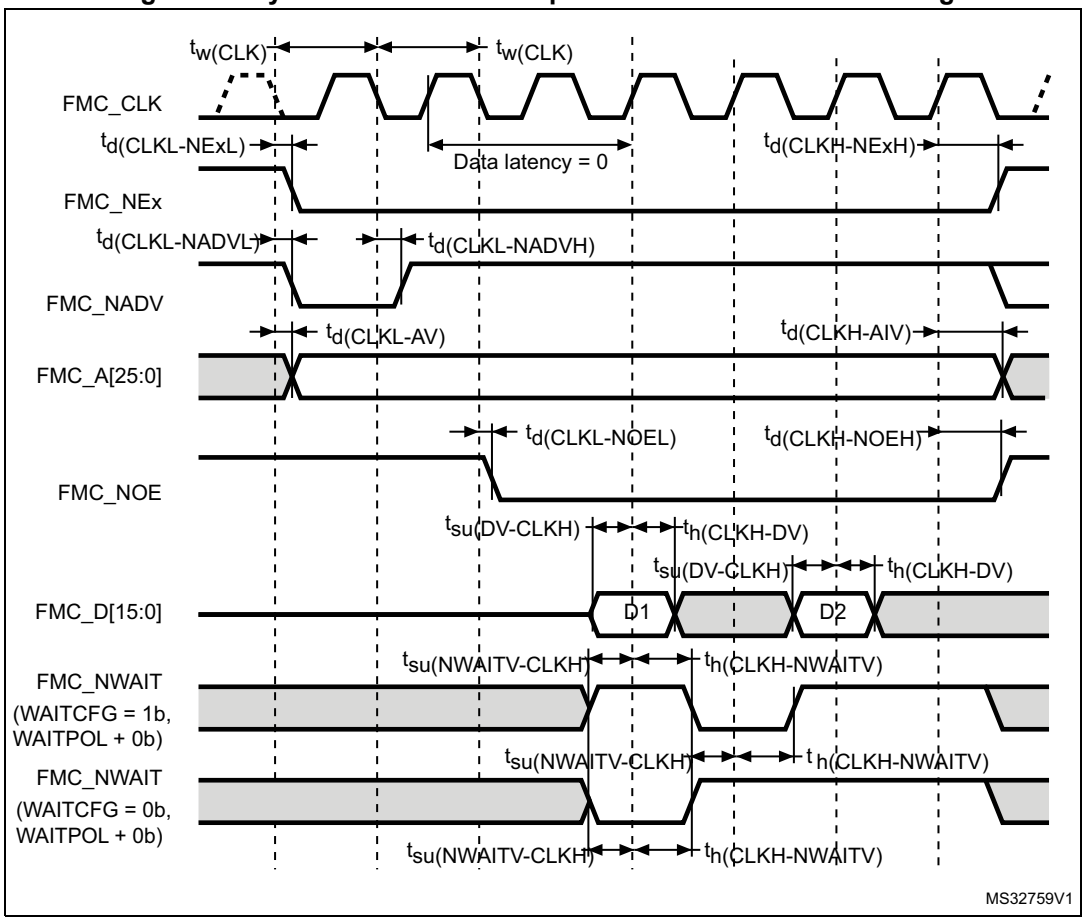

Table 111. Synchronous non-multiplexed NOR/PSRAM read timings(1)

Symbol	Parameter	Min	Max	Unit
$t_{w(CLK)}$	FMC_CLK period	$2T_{HCLK} - 0.5$	-	ns
$t_{(CLKL-NExL)}$	FMC_CLK low to FMC_NEx low (x=0..2)	-	2	
$t_{d(CLKH-NExH)}$	FMC_CLK high to FMC_NEx high (x= 0…2)	$T_{HCLK} + 0.5$	-	
$t_{d(CLKL-NADVL)}$	FMC_CLK low to FMC_NADV low	-	0.5	
$t_{d(CLKL-NADVH)}$	FMC_CLK low to FMC_NADV high	0	-	
$t_{d(CLKL-AV)}$	FMC_CLK low to FMC_Ax valid (x=16…25)	-	2.5	
$t_{d(CLKH-AIV)}$	FMC_CLK high to FMC_Ax invalid (x=16…25)	T_{HCLK}	-	
$t_{d(CLKL-NOEL)}$	FMC_CLK low to FMC_NOE low	-	1.5	
$t_{d(CLKH-NOEH)}$	FMC_CLK high to FMC_NOE high	$T_{HCLK} + 0.5$	-	
$t_{su(DV-CLKH)}$	FMC_D[15:0] valid data before FMC_CLK high	2.5	-	
$t_{h(CLKH-DV)}$	FMC_D[15:0] valid data after FMC_CLK high	2.5	-	
$t_{(NWAIT-CLKH)}$	FMC_NWAIT valid before FMC_CLK high	3	-	
$t_{h(CLKH-NWAIT)}$	FMC_NWAIT valid after FMC_CLK high	2.5	-	

1. Guaranteed by characterization results.

Figure 68. Synchronous non-multiplexed PSRAM write timings

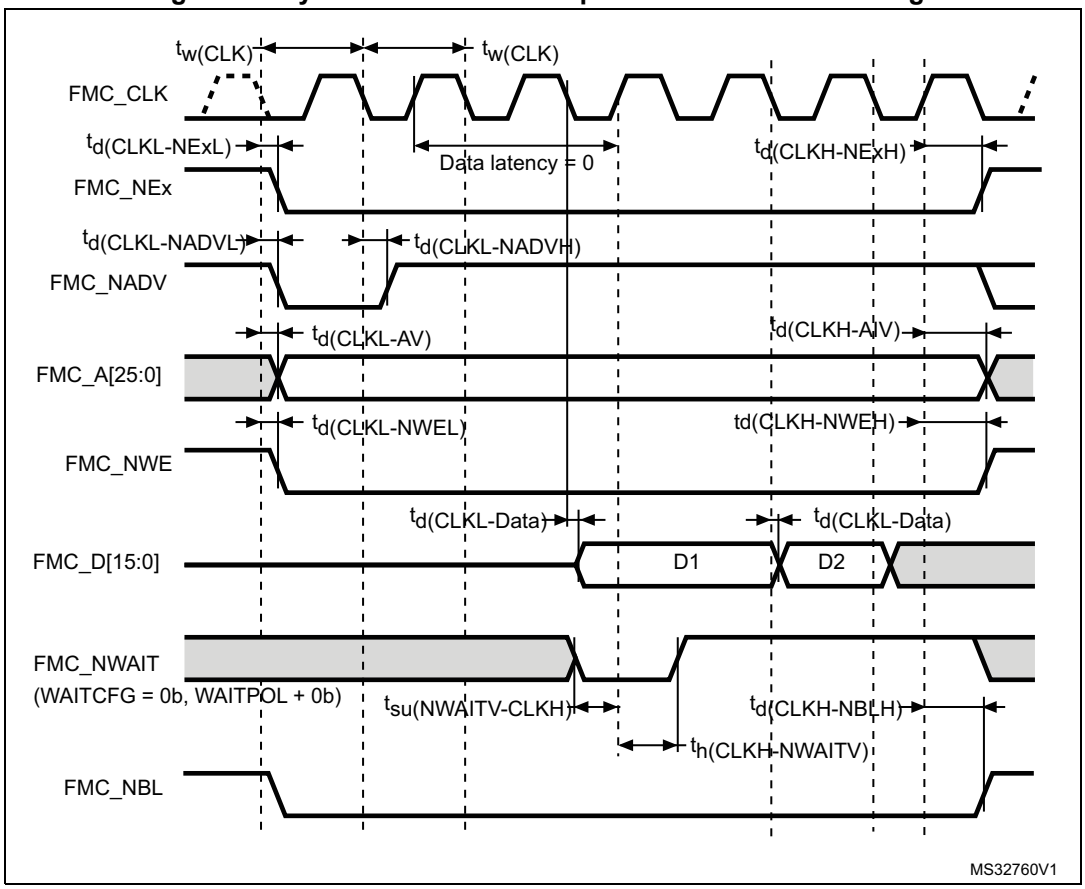

Table 112. Synchronous non-multiplexed PSRAM write timings(1)

Symbol	Parameter	Min	Max	Unit
$t_{(CLK)}$	FMC_CLK period	$2T_{HCLK} - 0.5$	-	ns
$t_{d(CLKL-NExL)}$	FMC_CLK low to FMC_NEx low (x=0..2)	-	2	
$t_{(CLKH-NExH)}$	FMC_CLK high to FMC_NEx high (x= 0…2)	$T_{HCLK} + 0.5$	-	
$t_{d(CLKL-NADVL)}$	FMC_CLK low to FMC_NADV low	-	0.5	
$t_{d(CLKL-NADVH)}$	FMC_CLK low to FMC_NADV high	0	-	
$t_{d(CLKL-AV)}$	FMC_CLK low to FMC_Ax valid (x=16…25)	-	2.5	
$t_{d(CLKH-AIV)}$	FMC_CLK high to FMC_Ax invalid (x=16…25)	T_{HCLK}	-	
$t_{d(CLKL-NWEL)}$	FMC_CLK low to FMC_NWE low	-	1.5	
$t_{d(CLKH-NWEH)}$	FMC_CLK high to FMC_NWE high	$T_{HCLK} + 1$	-	
$t_{d(CLKL-Data)}$	FMC_D[15:0] valid data after FMC_CLK low	-	3.5	
$t_{d(CLKL-NBLL)}$	FMC_CLK low to FMC_NBL low	-	2	
$t_{d(CLKH-NBLH)}$	FMC_CLK high to FMC_NBL high	$T_{HCLK} + 1$	-	
$t_{su(NWAIT-CLKH)}$	FMC_NWAIT valid before FMC_CLK high	2	-	
$t_{h(CLKH-NWAIT)}$	FMC_NWAIT valid after FMC_CLK high	3.5	-	

1. Guaranteed by characterization results.

NAND controller waveforms and timings

Figure 69 through *Figure 72* represent synchronous waveforms, and *Table 113* and *Table 114* provide the corresponding timings. The results shown in this table are obtained with the following FMC configuration:

- COM.FMC_SetupTime = 0x01;
- COM.FMC_WaitSetupTime = 0x03;
- COM.FMC_HoldSetupTime = 0x02;
- COM.FMC_HiZSetupTime = 0x01;
- ATT.FMC_SetupTime = 0x01;
- ATT.FMC_WaitSetupTime = 0x03;
- ATT.FMC_HoldSetupTime = 0x02;
- ATT.FMC_HiZSetupTime = 0x01;
- Bank = FMC_Bank_NAND;
- MemoryDataWidth = FMC_MemoryDataWidth_16b;
- ECC = FMC_ECC_Enable;
- ECCPageSize = FMC_ECCPageSize_512Bytes;
- TCLRSetupTime = 0;
- TARSetupTime = 0.

In all timing tables, the T_{HCLK} is the HCLK clock period.

Figure 69. NAND controller waveforms for read access

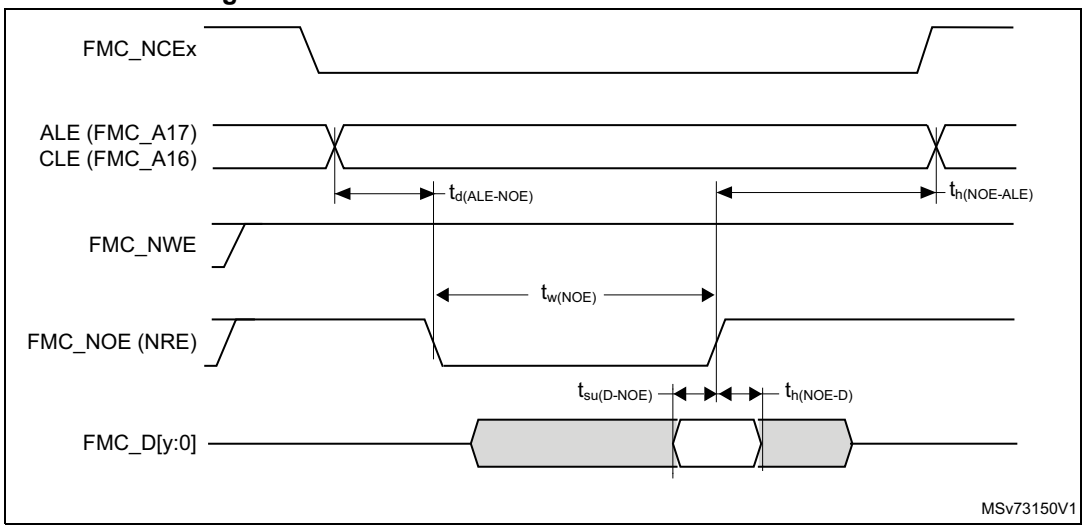

1. y = 7 or 15 depending on the NAND flash memory interface.

Figure 70. NAND controller waveforms for write access

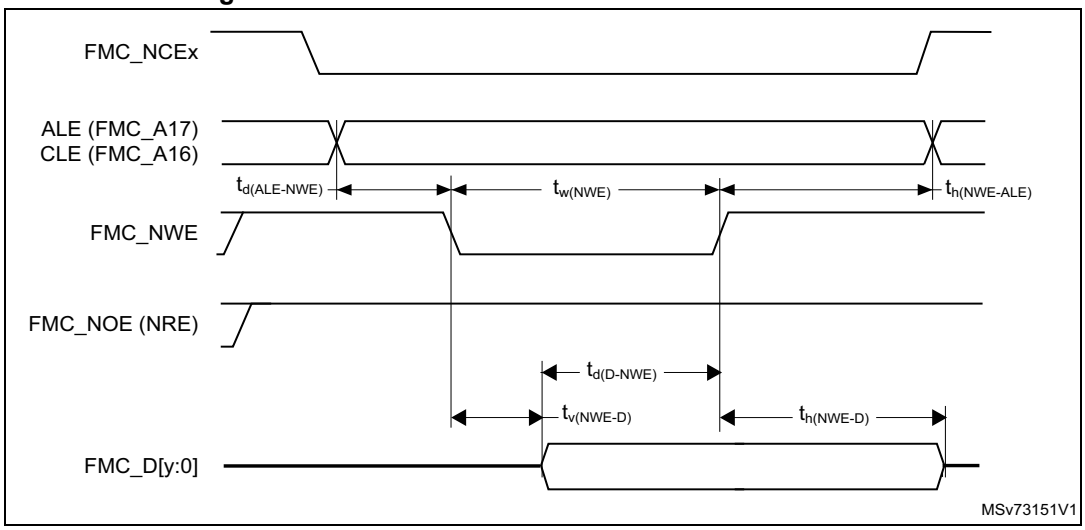

1. y = 7 or 15 depending on the NAND flash memory interface.

Table 113. Switching characteristics for NAND flash read cycles(1)

Symbol	Parameter	Min	Max	Unit
$t_{w(N0E)}$	FMC_NOE low width	$4T_{HCLK} - 0.5$	$4T_{HCLK} + 0.5$	ns
$t_{su(D-NOE)}$	FMC_D[15-0] valid data before FMC_NOE high	11	-	
$t_{h(NOE-D)}$	FMC_D[15-0] valid data after FMC_NOE high	0	-	
$t_{d(ALE-NOE)}$	FMC_ALE valid before FMC_NOE low	-	$3T_{HCLK} + 1$	
$t_{h(NOE-ALE)}$	FMC_NWE high to FMC_ALE invalid	$4T_{HCLK} - 2$	-	

1. Guaranteed by characterization results.

Table 114. Switching characteristics for NAND flash write cycles(1)

Symbol	Parameter	Min	Max	Unit
$t_{w(NWE)}$	FMC_NWE low width	$4T_{HCLK} - 0.5$	$4T_{HCLK} + 0.5$	ns
$t_{v(NWE-D)}$	FMC_NWE low to FMC_D[15-0] valid	0	-	
$t_{h(NWE-D)}$	FMC_NWE high to FMC_D[15-0] invalid	$2T_{HCLK} - 1$	-	
$t_{d(D-NWE)}$	FMC_D[15-0] valid before FMC_NWE high	$5T_{HCLK} - 1$	-	
$t_{d(ALE-NWE)}$	FMC_ALE valid before FMC_NWE low	-	$3T_{HCLK} + 1$	
$t_{h(NWE-ALE)}$	FMC_NWE high to FMC_ALE invalid	$2T_{HCLK} - 2$	-	

1. Guaranteed by characterization results.

SDRAM waveforms and timings

- CL = 30 pF on data and address lines. CL = 10 pF on FMC_SDCLK unless otherwise specified.

In all timing tables, the T_{HCLK} is the HCLK clock period.

- For 3.0 V≤ V_{DD}≤ 3.6 V, maximum FMC_SDCLK = 100 MHz at CL=20 pF (on FMC_SDCLK).
- For 2.7 V≤ V_{DD}≤ 3.6 V, maximum FMC_SDCLK = 90 MHz at CL=30 pF (on FMC_SDCLK).
- For 1.71 V≤ V_{DD}<1.9 V, maximum FMC_SDCLK = 70 MHz at CL=10 pF (on FMC_SDCLK).

Figure 71. SDRAM read access waveforms (CL = 1)

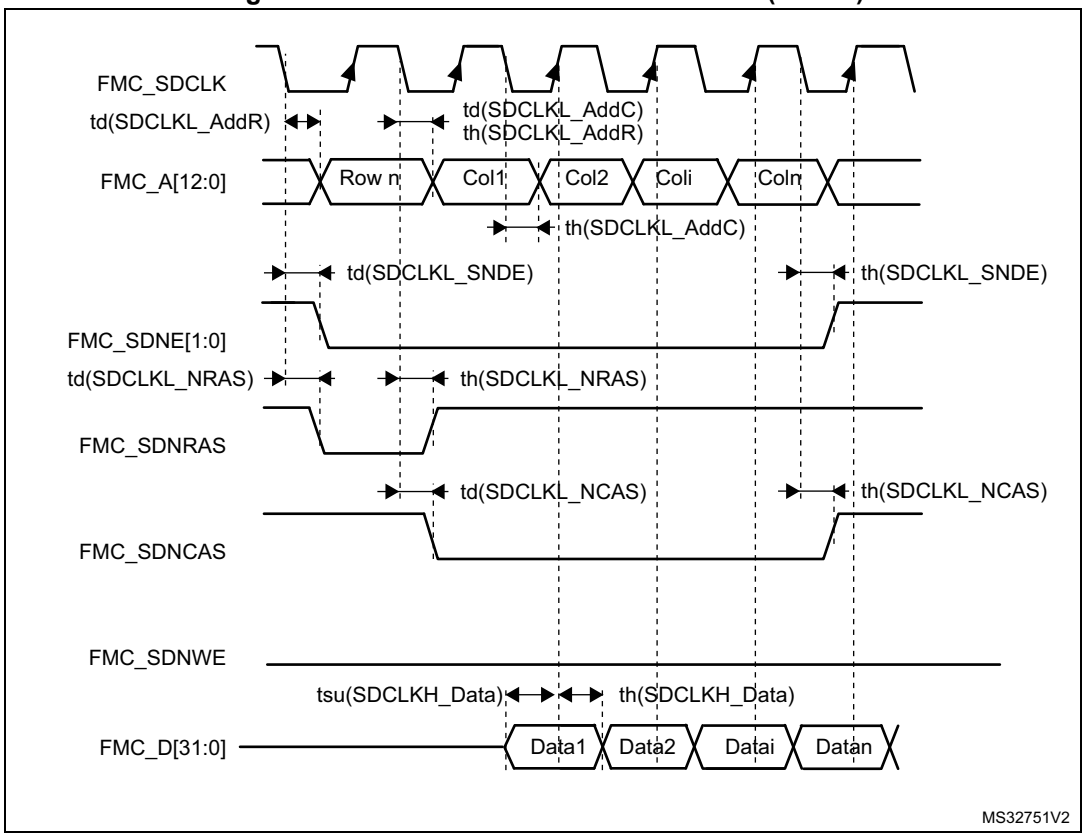

Table 115. SDRAM read timings(1)

Symbol	Parameter	Min	Max	Unit
$t_{w(SDCLK)}$	FMC_SDCLK period	$2T_{HCLK} - 0.5$	$2T_{HCLK} + 0.5$	ns
$t_{su(SDCLKH_Data)}$	Data input setup time	2.5	-	
$t_{h(SDCLKH_Data)}$	Data input hold time	0.5	-	
$t_{d(SDCLKL_Add)}$	Address valid time	-	3.5	
$t_{d(SDCLKL_SDNE)}$	Chip select valid time	-	1.5	
$t_{h(SDCLKL_SDNE)}$	Chip select hold time	0.5	-	
$t_{d(SDCLKL_SDNRAS)}$	SDNRAS valid time	-	1	
$t_{h(SDCLKL_SDNRAS)}$	SDNRAS hold time	0.5	-	
$t_{d(SDCLKL_SDNCAS)}$	SDNCAS valid time	-	0.5	
$t_{h(SDCLKL_SDNCAS)}$	SDNCAS hold time	0	-	

1. Guaranteed by characterization results.

Table 116. LPSDR SDRAM read timings(1)

Symbol	Parameter	Min	Max	Unit
$t_{W(SDCLK)}$	FMC_SDCLK period	$2T_{HCLK} - 0.5$	$2T_{HCLK} + 0.5$	ns
$t_{su(SDCLKH_Data)}$	Data input setup time	1	-	
$t_{h(SDCLKH_Data)}$	Data input hold time	3.5	-	
$t_{d(SDCLKL_Add)}$	Address valid time	-	2.5	
$t_{d(SDCLKL_SDNE)}$	Chip select valid time	-	2.5	
$t_{h(SDCLKL_SDNE)}$	Chip select hold time	0	-	
$t_{d(SDCLKL_SDNRAS}$	SDNRAS valid time	-	0.5	
$t_{h(SDCLKL_SDNRAS)}$	SDNRAS hold time	0	-	
$t_{d(SDCLKL_SDNCAS)}$	SDNCAS valid time	-	1.5	
$t_{h(SDCLKL_SDNCAS)}$	SDNCAS hold time	0	-	

1. Guaranteed by characterization results.

Figure 72. SDRAM write access waveforms

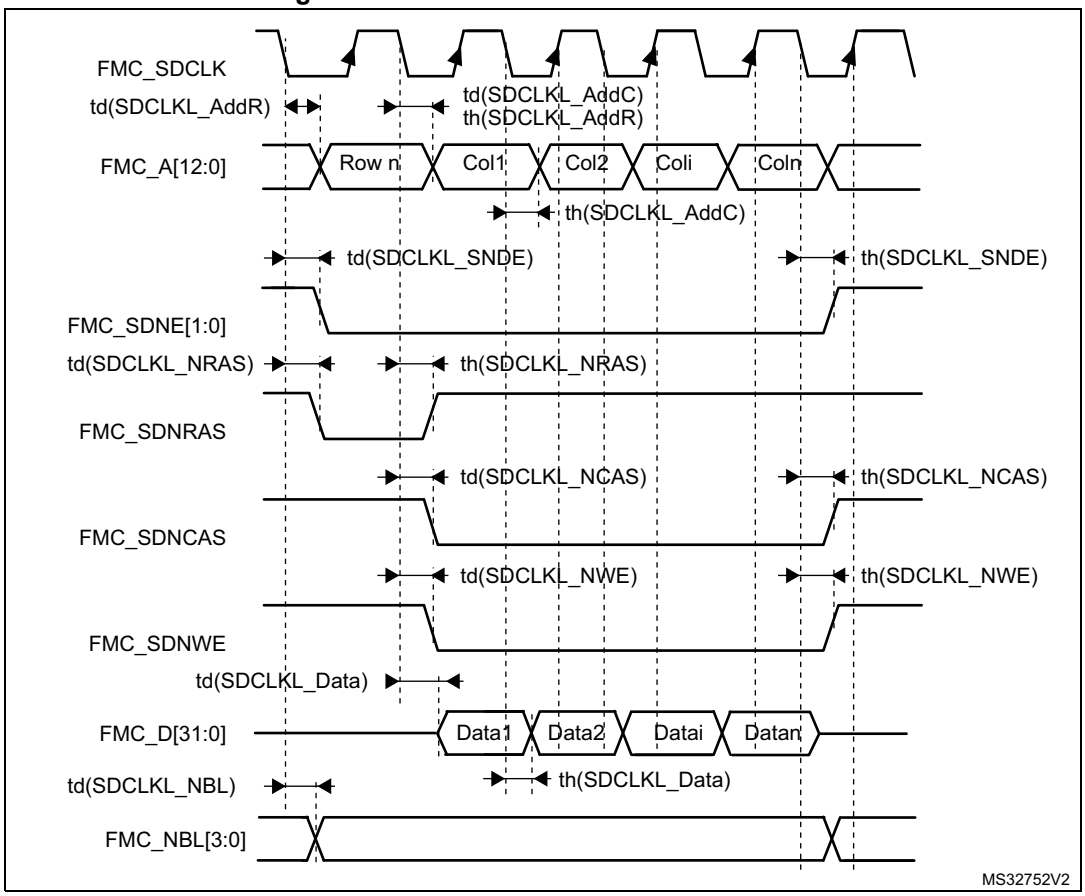

Table 117. SDRAM write timings(1)

Symbol	Parameter	Min	Max	Unit
$t_{w(SDCLK)}$	FMC_SDCLK period	$2T_{HCLK} - 0.5$	$2T_{HCLK} + 0.5$	ns
$t_{d(SDCLKL_Data)}$	Data output valid time	-	3	
$t_{h(SDCLKL_Data)}$	Data output hold time	0	-	
$t_{d(SDCLKL_Add)}$	Address valid time	-	3.5	
$t_{d(SDCLKL_SDNWE)}$	SDNWE valid time	-	1.5	
$t_{h(SDCLKL_SDNWE)}$	SDNWE hold time	0.5	-	
$t_{d(SDCLKL_SDNE)}$	Chip select valid time	-	1.5	
$t_{h(SDCLKL_SDNE)}$	Chip select hold time	0.5	-	
$t_{d(SDCLKL_SDNRAS)}$	SDNRAS valid time	-	1	
$t_{h(SDCLKL_SDNRAS)}$	SDNRAS hold time	0.5	-	
$t_{d(SDCLKL_SDNCAS)}$	SDNCAS valid time	-	1	
$t_{d(SDCLKL_SDNCAS)}$	SDNCAS hold time	0.5	-	

1. Guaranteed by characterization results.

Table 118. LPSDR SDRAM write timings(1)

Symbol	Parameter	Min	Max	Unit
$t_{w(SDCLK)}$	FMC_SDCLK period	$2T_{HCLK} - 0.5$	$2T_{HCLK} + 0.5$	ns
$t_{d(SDCLKL_Data)}$	Data output valid time	-	2.5	
$t_{h(SDCLKL_Data)}$	Data output hold time	0	-	
$t_{d(SDCLKL_Add)}$	Address valid time	-	2.5	
$t_{d(SDCLKL-SDNWE)}$	SDNWE valid time	-	2.5	
$t_{h(SDCLKL-SDNWE)}$	SDNWE hold time	0	-	
$t_{d(SDCLKL-SDNE)}$	Chip select valid time	-	0.5	
$t_{h(SDCLKL-SDNE)}$	Chip select hold time	0	-	
$t_{d(SDCLKL-SDNRAS)}$	SDNRAS valid time	-	1.5	
$t_{h(SDCLKL-SDNRAS)}$	SDNRAS hold time	0	-	
$t_{d(SDCLKL-SDNCAS)}$	SDNCAS valid time	-	1.5	
$t_{d(SDCLKL-SDNCAS)}$	SDNCAS hold time	0	-	

1. Guaranteed by characterization results.

6.3.31 Quad-SPI interface characteristics

Unless otherwise specified, the parameters given in *Table 119* and *Table 120* for Quad-SPI are derived from tests performed under the ambient temperature, f_{AHB} frequency and V_{DD} supply voltage conditions summarized in *Table 17: General operating conditions*, with the following configuration:

- Output speed is set to OSPEEDRy[1:0] = 11
- Capacitive load C = 20 pF
- Measurement points are done at CMOS levels: $0.5 \times V_{DD}$

Refer to *Section 6.3.20: I/O port characteristics* for more details on the input/output alternate function characteristics.

Table 119. QUADSPI characteristics in SDR mode(1)

Symbol	Parameter	Conditions	Min	Typ	Max	Unit
$Fck1/t_{(CK)}$	QUADSPI clock frequency	2.7 V≤V_{DD}<3.6 V CL=20 pF	-	-	108	MHz
		1.71 V<V_{DD}<3.6 V CL=15 pF	-	-	100	
$t_{w(CKH)}$	QUADSPI clock high and low time	-	$t_{(CK)}/2 - 1$	-	$t_{(CK)}/2$	ns
$t_{w(CKL)}$			$t_{(CK)}/2$	-	$t_{(CK)}/2 + 1$	
$t_{s(IN)}$	Data input setup time	2.7 V<V_{DD}<3.6 V	1.5	-	-	
		1.71 V<V_{DD}<3.6 V	1.5	-	-	
$t_{h(IN)}$	Data input hold time	2.7 V<V_{DD}<3.6 V	1.5	-	-	
		1.71 V<V_{DD}<3.6 V	2	-	-	
$t_{v(OUT)}$	Data output valid time	2.7 V<V_{DD}<3.6 V	-	1.5	2	
		1.71 V<V_{DD}<3.6 V	-	1.5	3.5	
$t_{h(OUT)}$	Data output hold time	-	0.5	-	-	

1. Guaranteed by characterization results.

Table 120. QUADSPI characteristics in DDR mode(1)

Symbol	Parameter	Conditions	Min	Typ	Max	Unit
$Fck1/t_{(CK)}$	QUADSPI clock frequency	2.7 V<V_{DD}<3.6 V CL=20 pF	-	-	80	MHz
		1.8 V<V_{DD}<3.6 V CL=15 pF	-	-	80	
		1.71 V<V_{DD}<3.6 V CL=10 pF	-	-	80	

Table 120. QUADSPI characteristics in DDR mode(1) (continued)

Symbol	Parameter	Conditions	Min	Typ	Max	Unit
$t_{w(CKH)}$	QUADSPI clock high and low time	-	$t_{(CK)}/2$ - 1	-	$t_{(CK)}/2$	ns
$t_{w(CKL)}$			$t_{(CK)}/2$	-	$t_{(CK)}/2$ + 1	
$t_{s(IN)}$, $t_{sf(IN)}$	Data input setup time	1.71 V<V_{DD}<3.6 V	1.75	-	-	
$t_{hr(IN)}$, $t_{hf(IN)}$	Data input hold time	2.7 V<V_{DD}<3.6 V	1	-	-	
		1.71 V<V_{DD}<3.6 V	2	-	-	
$t_{vr(OUT)}$, $t_{vf(OUT)}$	Data output valid time	2.7 V<V_{DD}<3.6 V	-	8.5	10	
		1.71 V<V_{DD}<3.6 V DHHC=0	-	8	12	
		DHHC=1 Pres=1, 2...	-	$T_{HCLK}/2$ + 1.5	$T_{HCLK}/2$ + 2.5	
$t_{hr(OUT)}$, $t_{hf(OUT)}$	Data output hold time	DHHC=0	7.5	-	-	
		DHHC=1 Pres=1, 2...	$T_{HCLK}/2$ + 0.5	-	-	

1. Guaranteed by characterization results.

Figure 73. Quad-SPI timing diagram - SDR mode

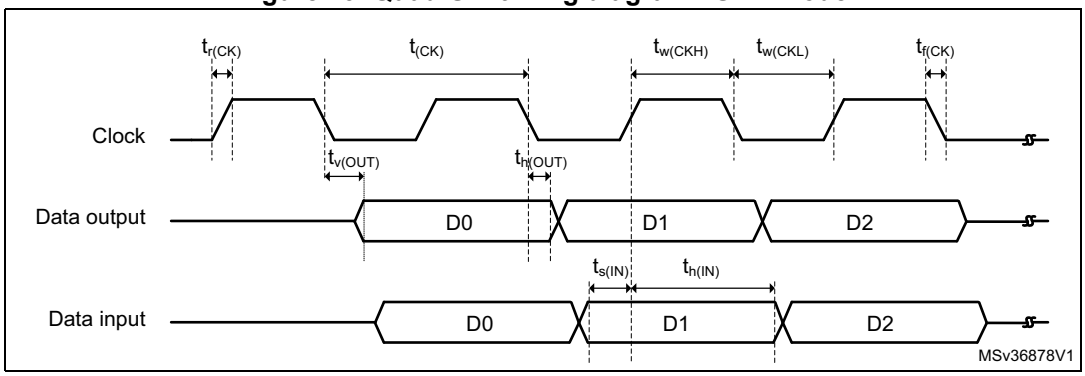

Figure 74. Quad-SPI timing diagram - DDR mode

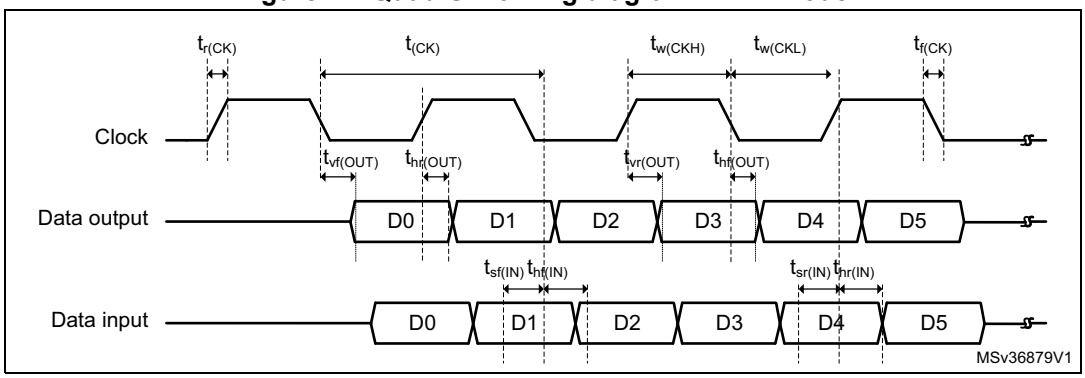

6.3.32 Camera interface (DCMI) timing specifications

Unless otherwise specified, the parameters given in *Table 121* for DCMI are derived from tests performed under the ambient temperature, f_{HCLK} frequency and V_{DD} supply voltage summarized in *Table 17*, with the following configuration:

- DCMI_PIXCLK polarity: falling
- DCMI_VSYNC and DCMI_HSYNC polarity: high
- Data formats: 14 bits

Table 121. DCMI characteristics(1)

Symbol	Parameter	Min	Max	Unit
-	Frequency ratio DCMI_PIXCLK/f_{HCLK}	-	0.4	-
DCMI_PIXCLK	Pixel clock input	-	54	MHz
D_{Pixel}	Pixel clock input duty cycle	30	70	%
$t_{su(DATA)}$	Data input setup time	2	-	ns
$t_{h(DATA)}$	Data input hold time	0.5	-	
$t_{su(HSYNC)}$ $t_{su(VSYNC)}$	DCMI_HSYNC/DCMI_VSYNC input setup time	2.5	-	
$t_{h(HSYNC)}$ $t_{h(VSYNC)}$	DCMI_HSYNC/DCMI_VSYNC input hold time	3	-	

1. Guaranteed by characterization results.

Figure 75. DCMI timing diagram

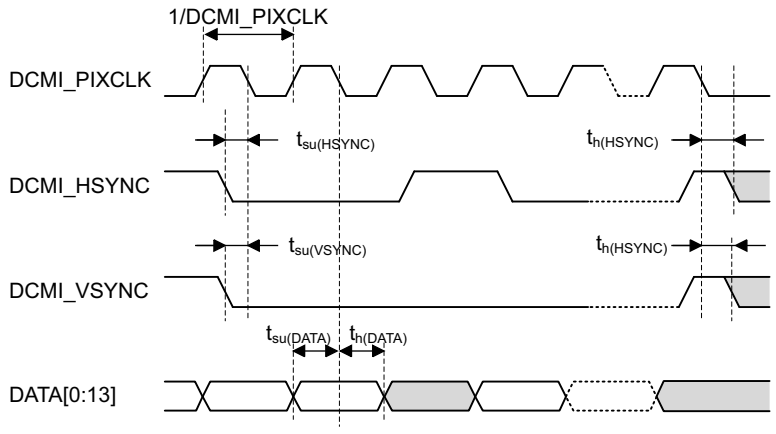

6.3.33 LCD-TFT controller (LTDC) characteristics

Unless otherwise specified, the parameters given in *Table 122* for LCD-TFT are derived from tests performed under the ambient temperature, f_{HCLK} frequency and V_{DD} supply voltage summarized in *Table 17*, with the following configuration:

- LCD_CLK polarity: high
- LCD_DE polarity: low
- LCD_VSYNC and LCD_HSYNC polarity: high
- Pixel formats: 24 bits

Table 122. LTDC characteristics (1)

Symbol	Parameter	Min	Max	Unit
f_{CLK}	LTDC clock output frequency	-	83	MHz
D_{CLK}	LTDC clock output duty cycle	45	55	%
$t_{w(CLKH)}$, $t_{w(CLKL)}$	Clock High time, low time	tw(CLK)/2−0.5	tw(CLK)/2+0.5	ns
$t_{v(DATA)}$	Data output valid time	-	6	
$t_{h(DATA)}$	Data output hold time	0	-	
$t_{v(HSYNC)}$, $t_{v(VSYNC)}$, $t_{v(DE)}$	HSYNC/VSYNC/DE output valid time	-	3.5	
$t_{h(HSYNC)}$, $t_{h(VSYNC)}$, $t_{h(DE)}$	HSYNC/VSYNC/DE output hold time	0.5	-	

1. Guaranteed by characterization results.

Figure 76. LCD-TFT horizontal timing diagram

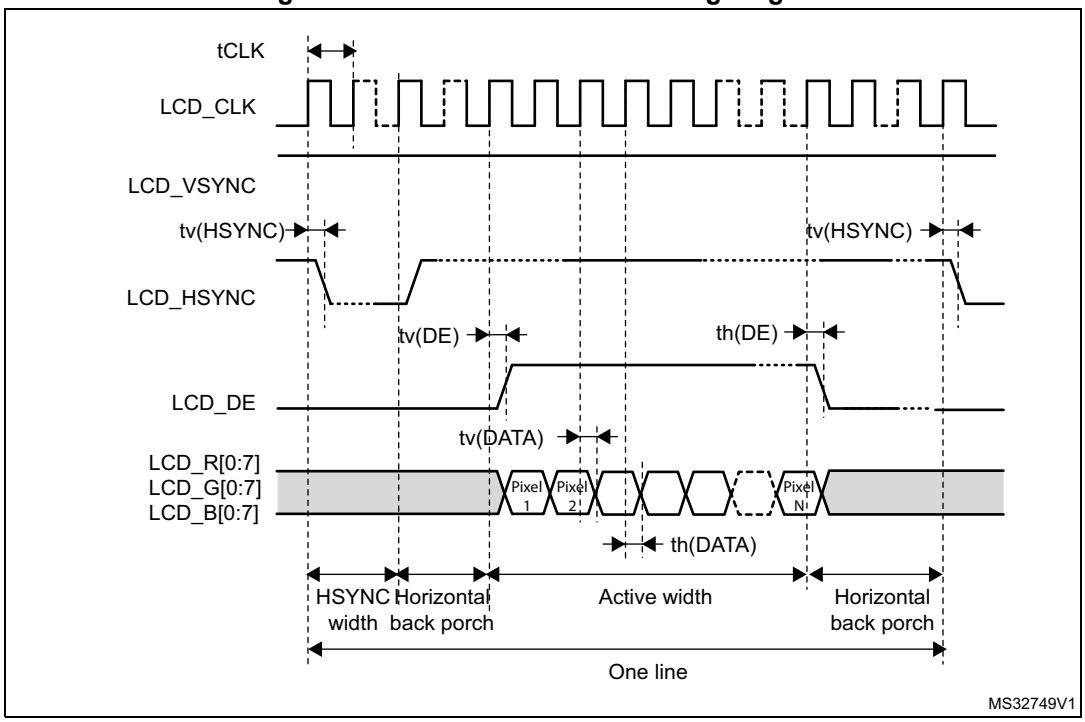

Figure 77. LCD-TFT vertical timing diagram

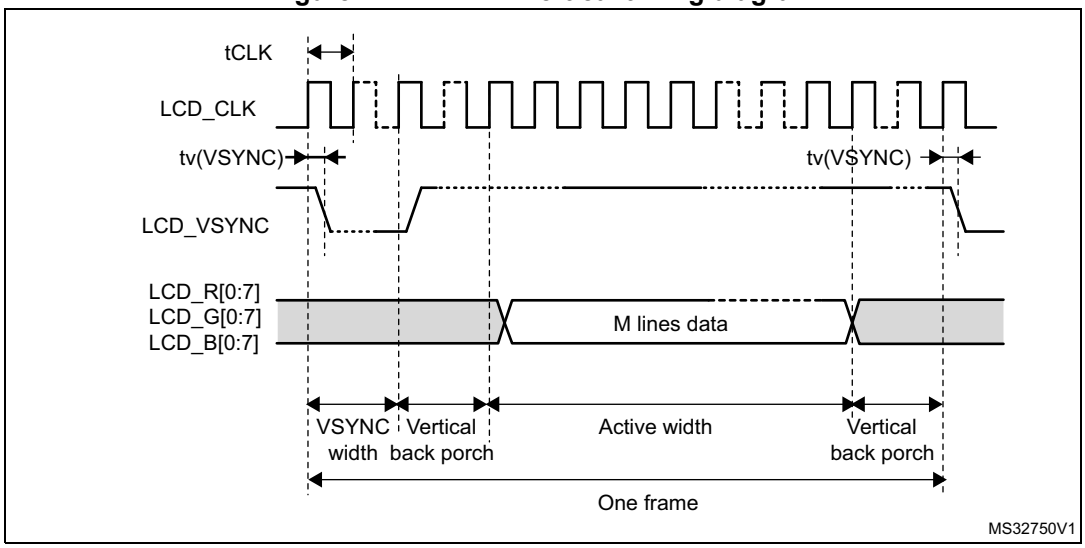

6.3.34 Digital filter for Sigma-Delta Modulators (DFSDM) characteristics

Unless otherwise specified, the parameters given in *Table 123* for DFSDM are derived from tests performed under the ambient temperature, f_{PCLK2} frequency and V_{DD} supply voltage summarized in *Table 17*, with the following configuration:

- Output speed is set to OSPEEDRy[1:0] = 10
- Capacitive load C = 30pF
- Measurement points are done at CMOS levels: 0.5 x VDD

Refer to *Section 6.3.20: I/O port characteristics* for more details on the input/output alternate function characteristics (DFSDM1_CKINx, DFSDM1_DATINx, DFSDM1_CKOUT for DFSDM1).

Table 123. DFSDM measured timing 1.71-3.6V

Symbol	Parameter	Conditions		Min	Typ	Max	Unit
$f_{DFSDMCLK}$	DFSDM clock	1.71 < V_{DD} < 3.6 V		-	-	f_{SYSCLK}	MHz
f_{CKIN} ($1/T_{CKIN}$)	Input clock frequency	SPI mode (SITP[1:0]=0,1), External clock mode (SPICKSEL[1:0]=0), 1.71 < V_{DD} < 3.6 V		-	-	20 ($f_{DFSDMCLK}$/4)	
		SPI mode (SITP[1:0]=0,1), External clock mode (SPICKSEL[1:0]=0), 2.7 < V_{DD} < 3.6 V		-	-	20 ($f_{DFSDMCLK}$/4)	
		SPI mode (SITP[1:0]=0,1), Internal clock mode (SPICKSEL[1:0]≠0), 1.71 < V_{DD} < 3.6 V		-	-	20 ($f_{DFSDMCLK}$/4)	
		SPI mode (SITP[1:0]=0,1), Internal clock mode (SPICKSEL[1:0]≠0), 2.7 < V_{DD} < 3.6 V		-	-	20 ($f_{DFSDMCLK}$/4)	
f_{CKOUT}	Output clock frequency	1.71 < V_{DD} < 3.6 V		-	-	20	
$DuCy_{CKOUT}$	Output clock frequency duty cycle	1.62 < V_{DD} < 3.6 V	Even division CKOUTDIV = n, 1, 3, 5...	45	50	55	%
			Odd division CKOUTDIV = n, 2, 4, 6...	(((n/2+1)/(n+1))*100)-5	(((n/2+1)/(n+1))*100)	(((n/2+1)/(n+1))*100)+5	

Table 123. DFSDM measured timing 1.71-3.6V (continued)

Symbol	Parameter	Conditions		Min	Typ	Max	Unit
$t_{wh(CKIN)}$ $t_{wl(CKIN)}$	Input clock high and low time	SPI mode (SITP[1:0]=0,1), External clock mode (SPICKSEL[1:0]=0), 1.71 < V_{DD} < 3.6 V	-	TCKIN/2 - 0.5	T_{CKIN}/2	-	ns
t_{su}	Data input setup time	SPI mode (SITP[1:0]=0,1), External clock mode (SPICKSEL[1:0]=0), 1.71 < V_{DD} < 3.6 V	-	2	-	-	
t_h	Data input hold time	SPI mode (SITP[1:0]=0,1), External clock mode (SPICKSEL[1:0]=0), 1.71 < V_{DD} < 3.6 V	-	3	-	-	
$T_{Manchester}$	Manchester data period (recovered clock period)	Manchester mode (SITP[1:0]=2,3), Internal clock mode (SPICKSEL[1:0]≠0), 1.71 < V_{DD} < 3.6 V	-	(CKOUTDIV +1) * $T_{DFSDMCLK}$	-	(2*CKOUTDIV) * $T_{DFSDMCLK}$	

6.3.35 DFSDM timing diagrams

Figure 78. Channel transceiver timing diagrams

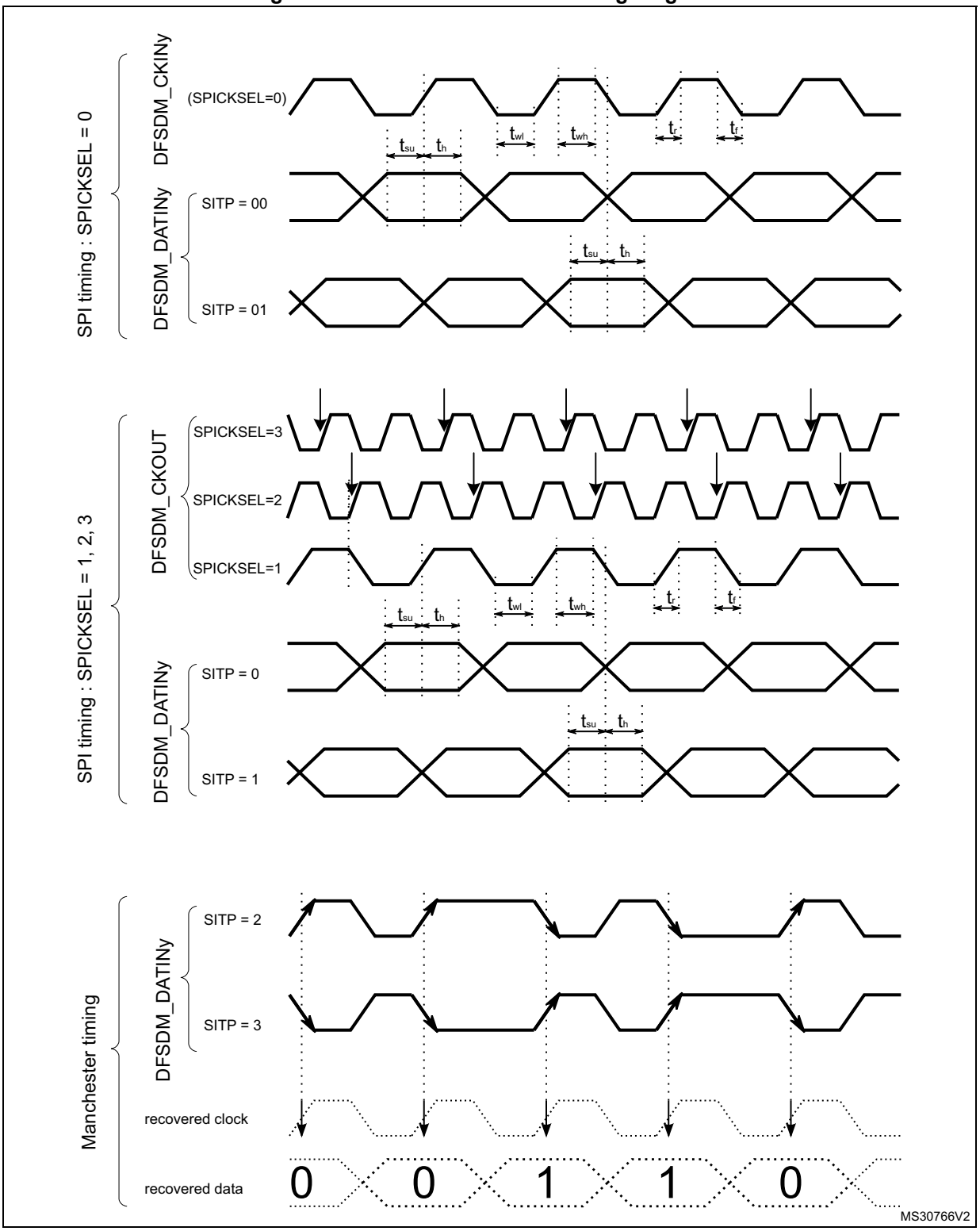

6.3.36 SD/SDIO MMC card host interface (SDMMC) characteristics

Unless otherwise specified, the parameters given in *Table 124* for the SDIO/MMC interface are derived from tests performed under the ambient temperature, f_{PCLK2} frequency and V_{DD} supply voltage conditions summarized in *Table 17*, with the following configuration:

- Output speed is set to OSPEEDRy[1:0] = 11
- Capacitive load C = 30 pF
- Measurement points are done at CMOS levels: $0.5V_{DD}$

Refer to *Section 6.3.20: I/O port characteristics* for more details on the input/output characteristics.

Figure 79. SDIO high-speed mode

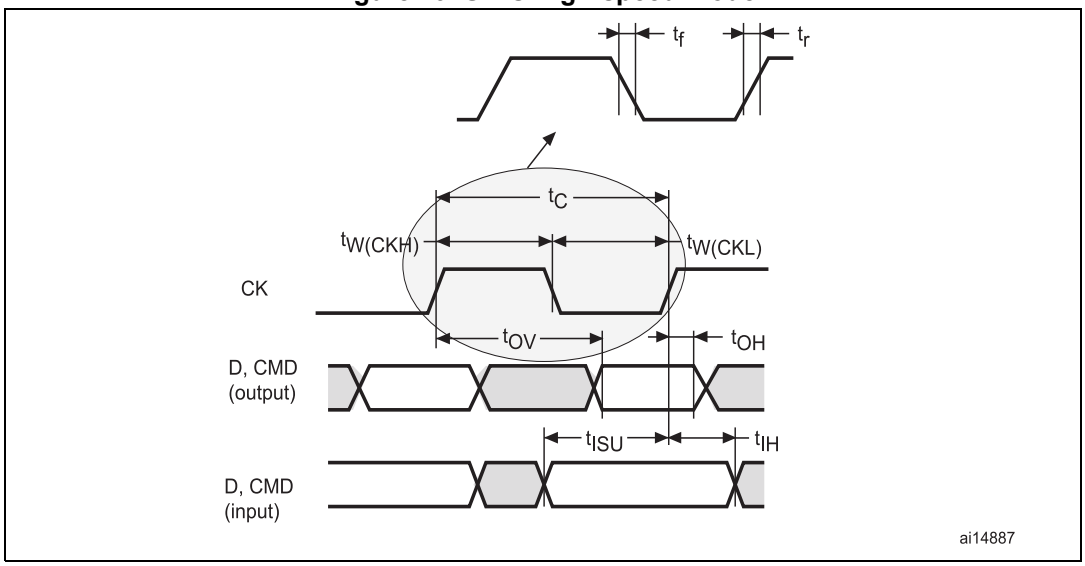

Figure 80. SD default mode

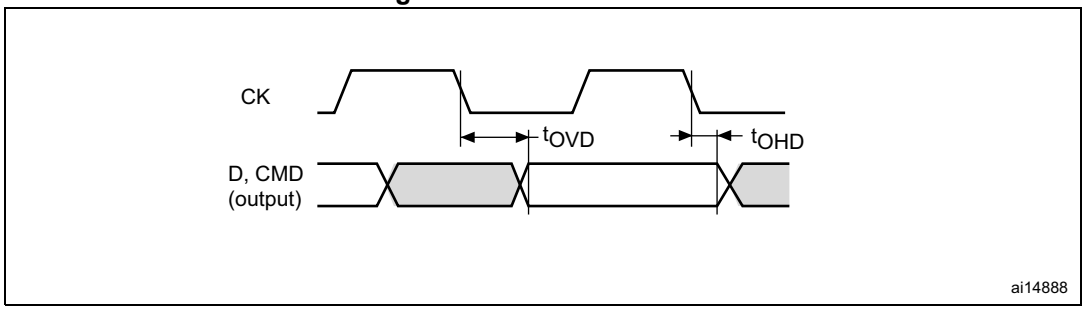

Table 124. Dynamic characteristics: SD / MMC characteristics, V_{DD}=2.7V to 3.6V(1)

Symbol	Parameter	Conditions	Min	Typ	Max	Unit
f_{PP}	Clock frequency in data transfer mode	-	0	-	50	MHz
-	SDMMC_CK/fPCLK2 frequency ratio	-	-	-	8/3	-
$t_{W(CKL)}$	Clock low time	fpp =50 MHz	9.5	10.5	-	ns
$t_{W(CKH)}$	Clock high time	fpp =50 MHz	8.5	9.5	-	
CMD, D inputs (referenced to CK) in MMC and SD HS mode						
t_{ISU}	Input setup time HS	fpp =50 MHz	4.5	-	-	ns
t_{IH}	Input hold time HS	fpp =50 MHz	1.5	-	-	
CMD, D outputs (referenced to CK) in MMC and SD HS mode						
t_{OV}	Output valid time HS	fpp =50 MHz	-	11	12	ns
t_{OH}	Output hold time HS	fpp =50 MHz	9	-	-	
CMD, D inputs (referenced to CK) in SD default mode						
tISUD	Input setup time SD	fpp =25 MHz	4.5	-	-	ns
tIHD	Input hold time SD	fpp =25 MHz	1.5	-	-	
CMD, D outputs (referenced to CK) in SD default mode						
tOVD	Output valid default time SD	fpp =25 MHz	-	0.5	1.5	ns
tOHD	Output hold default time SD	fpp =25 MHz	0	-	-	

1. Guaranteed by characterization results.

Table 125. Dynamic characteristics: eMMC characteristics, V_{DD}=1.71V to 1.9V(1)(2)

Symbol	Parameter	Conditions	Min	Typ	Max	Unit
f_{PP}	Clock frequency in data transfer mode	-	0	-	50	MHz
-	SDMMC_CK/fPCLK2 frequency ratio	-	-	-	8/3	-
$t_{W(CKL)}$	Clock low time	fpp =50 MHz	9.5	10.5	-	ns
$t_{W(CKH)}$	Clock high time	fpp =50 MHz	8.5	9.5	-	
CMD, D inputs (referenced to CK) in eMMC mode						
t_{ISU}	Input setup time HS	fpp =50 MHz	4	-	-	ns
t_{IH}	Input hold time HS	fpp =50 MHz	3	-	-	
CMD, D outputs (referenced to CK) in eMMC mode						
t_{OV}	Output valid time HS	fpp =50 MHz	-	11	15.5	ns
t_{OH}	Output hold time HS	fpp =50 MHz	9.5	-	-	

1. Guaranteed by characterization results.
2. Cload = 20 pF.

7 Package information

In order to meet environmental requirements, ST offers these devices in different grades of ECOPACK packages, depending on their level of environmental compliance. ECOPACK specifications, grade definitions and product status are available at: *www.st.com*. ECOPACK is an ST trademark.

7.1 Device marking

Refer to technical note “Reference device marking schematics for STM32 microcontrollers and microprocessors” (TN1433) available on www.st.com, for the location of pin 1 / ball A1 as well as the location and orientation of the marking areas versus pin 1 / ball A1.

Parts marked as “ES”, “E” or accompanied by an engineering sample notification letter, are not yet qualified and therefore not approved for use in production. ST is not responsible for any consequences resulting from such use. In no event will ST be liable for the customer using any of these engineering samples in production. ST’s Quality department must be contacted prior to any decision to use these engineering samples to run a qualification activity.

A WLCSP simplified marking example (if any) is provided in the corresponding package information subsection.

7.2 LQFP100 package information (1L)

This LQFP is 100 lead, 14 x 14 mm low-profile quad flat package.

Note: See list of notes in the notes section.

Figure 81. LQFP100 - Outline(15)

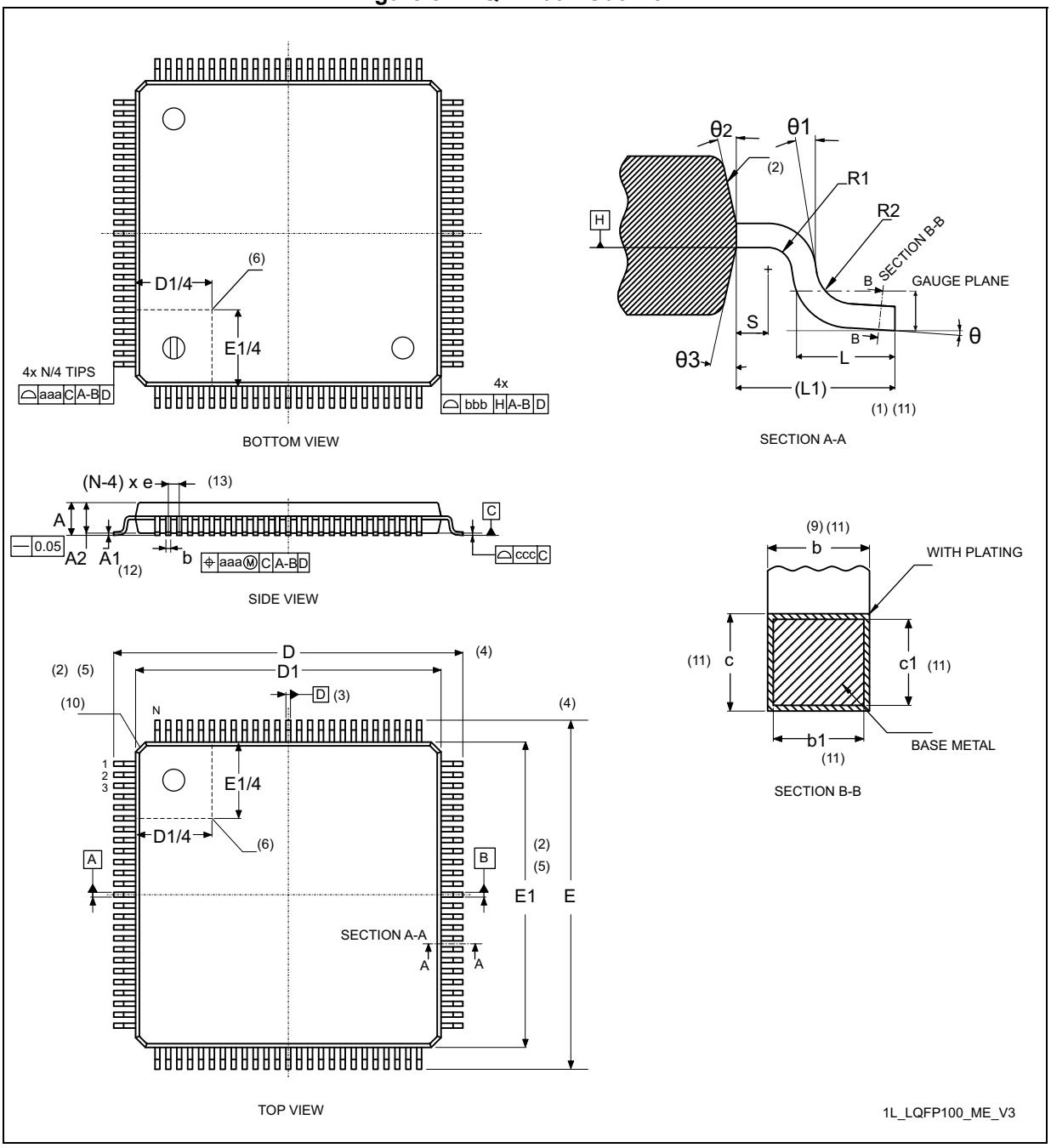

Table 126. LQFP100 - Mechanical data

Symbol	millimeters			inches[14]		
	Min	Typ	Max	Min	Typ	Max
A	-	1.50	1.60	-	0.0590	0.0630
A1[11]	0.05	-	0.15	0.0019	-	0.0059
A2	1.35	1.40	1.45	0.0531	0.0551	0.0570
b[9][10]	0.17	0.22	0.27	0.0067	0.0087	0.0106
b1[10]	0.17	0.20	0.23	0.0067	0.0079	0.0090
c[10]	0.09	-	0.20	0.0035	-	0.0079
c1[10]	0.09	-	0.16	0.0035	-	0.0063
D[4]	16.00 BSC			0.6299 BSC		
D1[2][5]	14.00 BSC			0.5512 BSC		
E[4]	16.00 BSC			0.6299 BSC		
E1[2][5]	14.00 BSC			0.5512 BSC		
e	0.50 BSC			0.0197 BSC		
L	0.45	0.60	0.75	0.177	0.0236	0.0295
L1[1][10]	1.00			-	0.0394	-
N[11]	100					
θ	0°	3.5°	7°	0°	3.5°	7°
θ1	0°	-	-	0°	-	-
θ2	10°	12°	14°	10°	12°	14°
θ3	10°	12°	14°	10°	12°	14°
R1	0.08	-	-	0.0031	-	-
R2	0.08	-	0.20	0.0031	-	0.0079
S	0.20	-	-	0.0079	-	-
aaa[1]	0.20			0.0079		
bbb[1]	0.20			0.0079		
ccc[1]	0.08			0.0031		
ddd[1]	0.08			0.0031		

Notes:

1. Dimensioning and tolerancing schemes conform to ASME Y14.5M-1994.
2. The Top package body size may be smaller than the bottom package size by as much as 0.15 mm.
3. Datums A-B and D to be determined at datum plane H.
4. To be determined at seating datum plane C.
5. Dimensions D1 and E1 do not include mold flash or protrusions. Allowable mold flash or protrusions is “0.25 mm” per side. D1 and E1 are Maximum plastic body size dimensions including mold mismatch.
6. Details of pin 1 identifier are optional but must be located within the zone indicated.
7. All Dimensions are in millimeters.
8. No intrusion allowed inwards the leads.
9. Dimension “b” does not include dambar protrusion. Allowable dambar protrusion shall not cause the lead width to exceed the maximum “b” dimension by more than 0.08 mm. Dambar cannot be located on the lower radius or the foot. Minimum space between protrusion and an adjacent lead is 0.07 mm for 0.4 mm and 0.5 mm pitch packages.
10. Exact shape of each corner is optional.
11. These dimensions apply to the flat section of the lead between 0.10 mm and 0.25 mm from the lead tip.
12. A1 is defined as the distance from the seating plane to the lowest point on the package body.
13. “N” is the number of terminal positions for the specified body size.
14. Values in inches are converted from mm and rounded to 4 decimal digits.
15. Drawing is not to scale.

Figure 82. LQFP100 - Footprint example

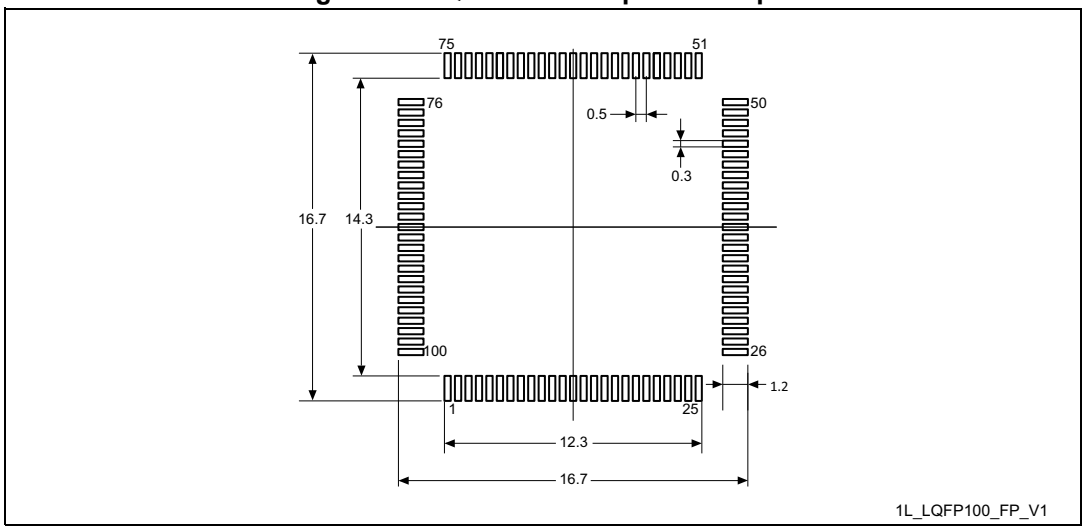

1. Dimensions are expressed in millimeters.

7.3 TFBGA100 package information (A08Q)

This TFBGA is 100 - ball, 8 x 8 mm, 0.8 mm pitch fine pitch ball grid array package.

Note: See list of notes in the notes section.

Figure 83. TFBGA100 - Outline(13)

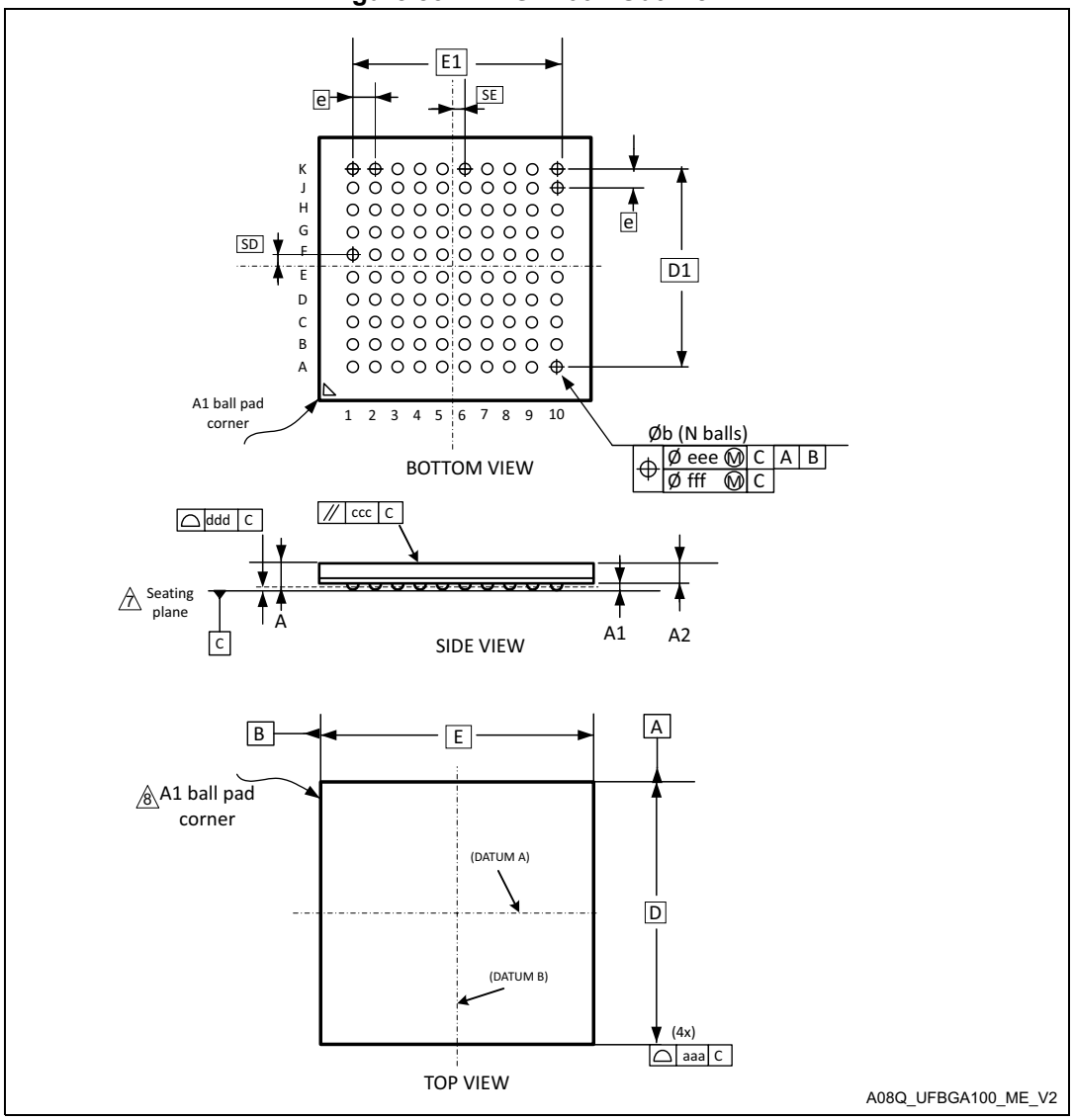

Table 127. TFBGA100 - Mechanical data

Symbol	millimeters(1)			inches(12)		
	Min	Typ	Max	Min	Typ	Max
A(2)(3)	-	-	1.20	-	-	0.0472
A1(4)	0.15	-	-	0.0059	-	-
A2	-	0.74	-	-	0.0291	-
b(5)	0.35	0.40	0.45	0.0138	0.0157	0.0177
D	8.00 BSC(6)			0.3150 BSC		
D1	7.20 BSC			0.2835 BSC		
E	8.00 BSC			0.3150 BSC		
E1	7.20 BSC			0.2835 BSC		
e(9)	0.80 BSC			0.0315 BSC		
N(10)	100					
SD(11)	0.40 BSC			0.0157 BSC		
SE(11)	0.40 BSC			0.0157 BSC		
aaa	0.15			0.0059		
ccc	0.20			0.0079		
ddd	0.10			0.0039		
eee	0.15			0.0059		
fff	0.08			0.0031		

Notes:

1. Dimensioning and tolerancing schemes conform to ASME Y14.5M-2018.
2. TFBGA stands for thin profile fine pitch ball grid array: 1.00 mm < A ≤ 1.20 mm / fine pitch e < 1.00 mm.
3. The profile height, A, is the distance from the seating plane to the highest point on the package. It is measured perpendicular to the seating plane.
4. A1 is defined as the distance from the seating plane to the lowest point on the package body.
5. Dimension b is measured at the maximum diameter of the terminal (ball) in a plane parallel to primary datum C.
6. BSC stands for BASIC dimensions. It corresponds to the nominal value and has no tolerance. For tolerances refer to form and position table. On the drawing these dimensions are framed.
7. Primary datum C is defined by the plane established by the contact points of three or more solder balls that support the device when it is placed on top of a planar surface.
8. The terminal (ball) A1 corner must be identified on the top surface of the package by using a corner chamfer, ink or metalized markings, or other feature of package body or

integral heat slug. A distinguish feature is allowable on the bottom surface of the package to identify the terminal A1 corner. Exact shape of each corner is optional.

9. e represents the solder ball grid pitch.
10. N represents the total number of balls on the BGA.
11. Basic dimensions SD and SE are defined with respect to datums A and B. It defines the position of the centre ball(s) in the outer row or column of a fully populated matrix.
12. Values in inches are converted from mm and rounded to 4 decimal digits.
13. Drawing is not to scale.

Figure 84. TFBGA100 - Footprint example

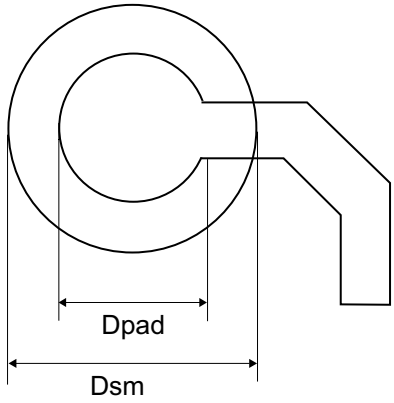

Table 128. TFBGA100 - Example of PCB design rules (0.8 mm pitch BGA)

Dimension	Values
Pitch	0.8
Dpad	0.400 mm
Dsm	0.470 mm typ. (depends on the soldermask registration tolerance)
Stencil opening	0.400 mm
Stencil thickness	Between 0.100 mm and 0.125 mm
Pad trace width	0.120 mm

7.4 LQFP144 package information (1A)

This LQFP is a 144-pin, 20 x 20 mm low-profile quad flat package.

Note: See list of notes in the notes section.

Figure 85. LQFP144 - Outline(15)

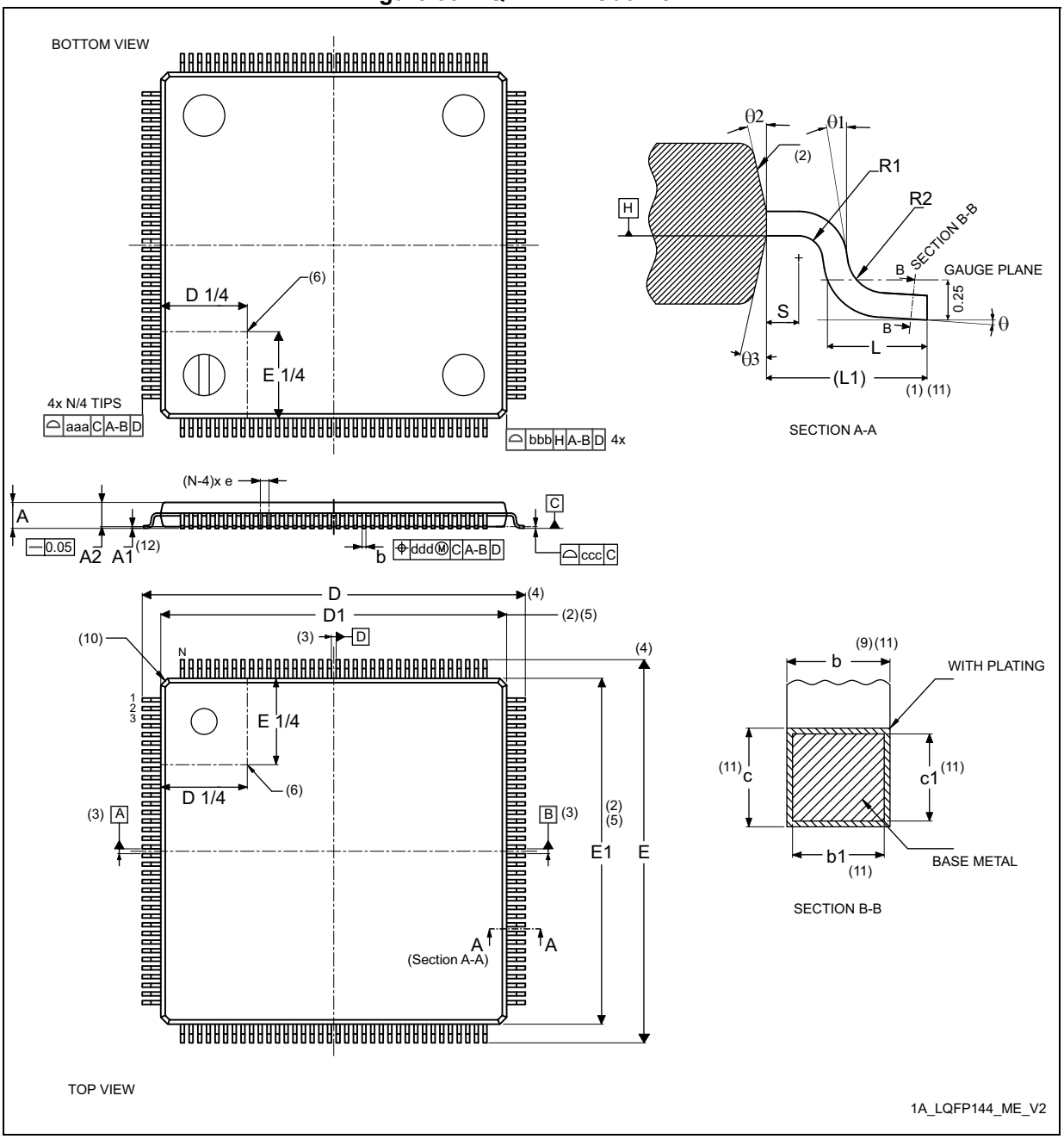

Table 129. LQFP144 - Mechanical data

Symbol	millimeters			inches[14]		
	Min	Typ	Max	Min	Typ	Max
A	-	-	1.60	-	-	0.0630
A1[11]	0.05	-	0.15	0.0020	-	0.0059
A2	1.35	1.40	1.45	0.0531	0.0551	0.0571
b[9][10]	0.17	0.22	0.27	0.0067	0.0087	0.0106
b1[10]	0.17	0.20	0.23	0.0067	0.0079	0.0090
c[10]	0.09	-	0.20	0.0035	-	0.0079
c1[10]	0.09	-	0.16	0.0035	-	0.0063
D[4]	22.00 BSC			0.8661 BSC		
D1[2][5]	20.00 BSC			0.7874 BSC		
E[4]	22.00 BSC			0.8661 BSC		
E1[2][5]	20.00 BSC			0.7874 BSC		
e	0.50 BSC			0.0197 BSC		
L	0.45	0.60	0.75	0.0177	0.0236	0.0295
L1	1.00 REF			0.0394 REF		
N[11]	144					
θ	0°	3.5°	7°	0°	3.5°	7°
θ1	0°	-	-	0°	-	-
θ2	10°	12°	14°	10°	12°	14°
θ3	10°	12°	14°	10°	12°	14°
R1	0.08	-	-	0.0031	-	-
R2	0.08	-	0.20	0.0031	-	0.0079
S	0.20	-	-	0.0079	-	-
aaa	0.20			0.0079		
bbb	0.20			0.0079		
ccc	0.08			0.0031		
ddd	0.08			0.0031		

Notes:

1. Dimensioning and tolerancing schemes conform to ASME Y14.5M-1994.
2. The Top package body size may be smaller than the bottom package size by as much as 0.15 mm.
3. Datums A-B and D to be determined at datum plane H.
4. To be determined at seating datum plane C.
5. Dimensions D1 and E1 do not include mold flash or protrusions. Allowable mold flash or protrusions is “0.25 mm” per side. D1 and E1 are Maximum plastic body size dimensions including mold mismatch.
6. Details of pin 1 identifier are optional but must be located within the zone indicated.
7. All Dimensions are in millimeters.
8. No intrusion allowed inwards the leads.
9. Dimension “b” does not include dambar protrusion. Allowable dambar protrusion shall not cause the lead width to exceed the maximum “b” dimension by more than 0.08 mm. Dambar cannot be located on the lower radius or the foot. Minimum space between protrusion and an adjacent lead is 0.07 mm for 0.4 mm and 0.5 mm pitch packages.
10. Exact shape of each corner is optional.
11. These dimensions apply to the flat section of the lead between 0.10 mm and 0.25 mm from the lead tip.
12. A1 is defined as the distance from the seating plane to the lowest point on the package body.
13. “N” is the number of terminal positions for the specified body size.
14. Values in inches are converted from mm and rounded to 4 decimal digits.
15. Drawing is not to scale.

Figure 86. LQFP144 - Footprint example

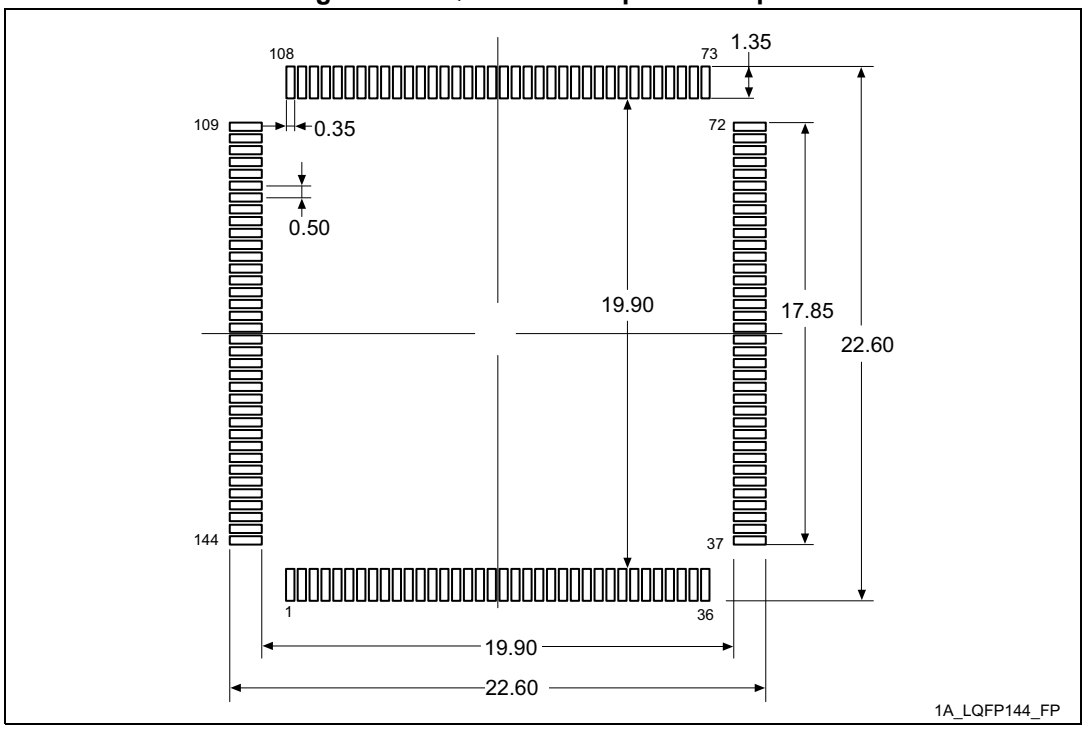

1. Dimensions are expressed in millimeters.

7.5 LQFP176 package information (1T)

This LQFP is a 176-pin, 24 x 24 mm, 0.5 mm pitch, low profile quad flat package.

Note: See list of notes in the notes section.

Figure 87. LQFP176 - Outline(15)

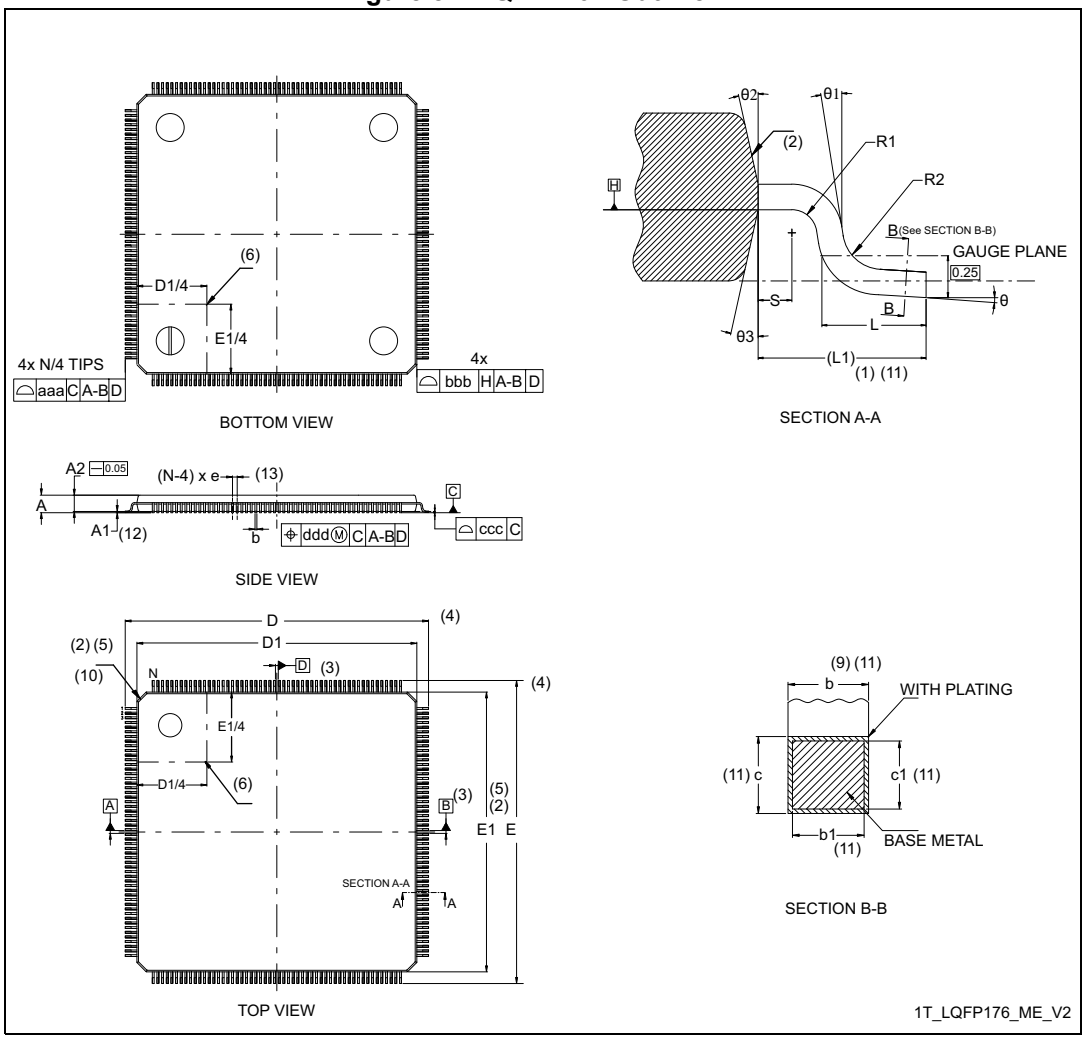

Table 130. LQFP176 - Mechanical data

Symbol	millimeters			inches[14]		
	Min	Typ	Max	Min	Typ	Max
A	-	-	1.600	-	-	0.0630
A1[11]	0.050	-	0.150	0.0020	-	0.0059
A2	1.350	1.400	1.450	0.0531	0.0551	0.0571
b[9][10]	0.170	0.220	0.270	0.0067	0.0087	0.0106
b1[10]	0.170	0.200	0.230	0.0067	0.0079	0.0091
c[10]	0.090	-	0.200	0.0035	-	0.0079
c1[10]	0.090	-	0.160	0.0035	-	0.063
D[4]	26.000			1.0236		
D1[2][5]	24.000			0.9449		
E[4]	26.000			0.0197		
E1[2][5]	24.000			0.9449		
e	0.500			0.1970		
L	0.450	0.600	0.750	0.0177	0.0236	0.0295
L1[1][10]	1			0.0394 REF		
N[11]	176					
θ	0°	3.5°	7°	0°	3.5°	7°
θ1	0°	-	-	0°	-	-
θ2	10°	12°	14°	10°	12°	14°
θ3	10°	12°	14°	10°	12°	14°
R1	0.080	-	-	0.0031	-	-
R2	0.080	-	0.200	0.0031	-	0.0079
S	0.200	-	-	0.0079	-	-
aaa[1]	0.200			0.0079		
bbb[1]	0.200			0.0079		
ccc[1]	0.080			0.0031		
ddd[1]	0.080			0.0031		

Notes:

1. Dimensioning and tolerancing schemes conform to ASME Y14.5M-1994.
2. The Top package body size may be smaller than the bottom package size by as much as 0.15 mm.
3. Datums A-B and D to be determined at datum plane H.
4. To be determined at seating datum plane C.
5. Dimensions D1 and E1 do not include mold flash or protrusions. Allowable mold flash or protrusions is “0.25 mm” per side. D1 and E1 are Maximum plastic body size dimensions including mold mismatch.
6. Details of pin 1 identifier are optional but must be located within the zone indicated.
7. All Dimensions are in millimeters.
8. No intrusion allowed inwards the leads.
9. Dimension “b” does not include dambar protrusion. Allowable dambar protrusion shall not cause the lead width to exceed the maximum “b” dimension by more than 0.08 mm. Dambar cannot be located on the lower radius or the foot. Minimum space between protrusion and an adjacent lead is 0.07 mm for 0.4 mm and 0.5 mm pitch packages.
10. Exact shape of each corner is optional.
11. These dimensions apply to the flat section of the lead between 0.10 mm and 0.25 mm from the lead tip.
12. A1 is defined as the distance from the seating plane to the lowest point on the package body.
13. “N” is the number of terminal positions for the specified body size.
14. Values in inches are converted from mm and rounded to 4 decimal digits.
15. Drawing is not to scale.

Figure 88. LQFP176 - Footprint example

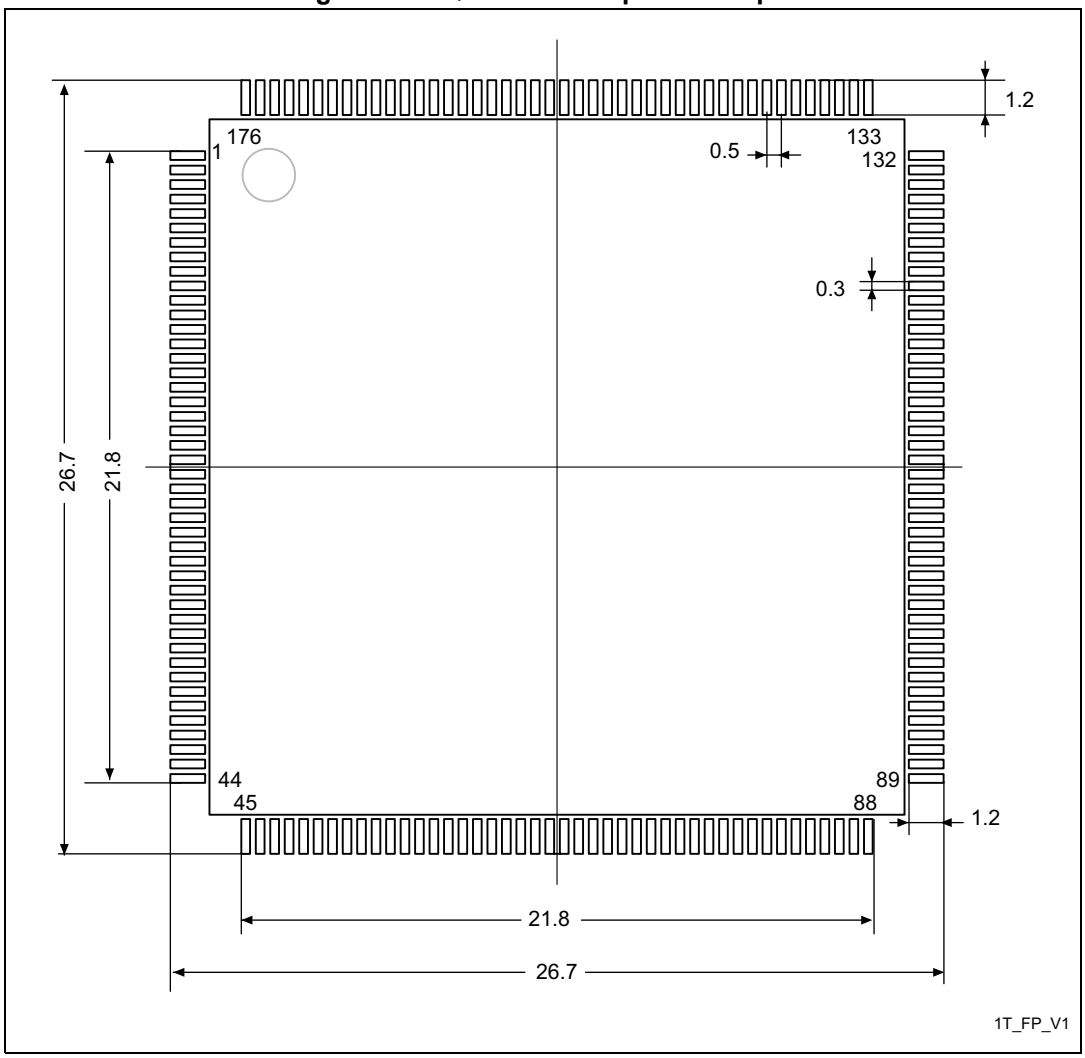

1. Dimensions are expressed in millimeters.

7.6 UFBGA(176+25) package information (A0E7)

This UFBGA is a 176+25-ball, 10 x 10 mm, 0.65 mm pitch, ultra fine pitch ball grid array package.

Figure 89. UFBGA(176+25) - Outline

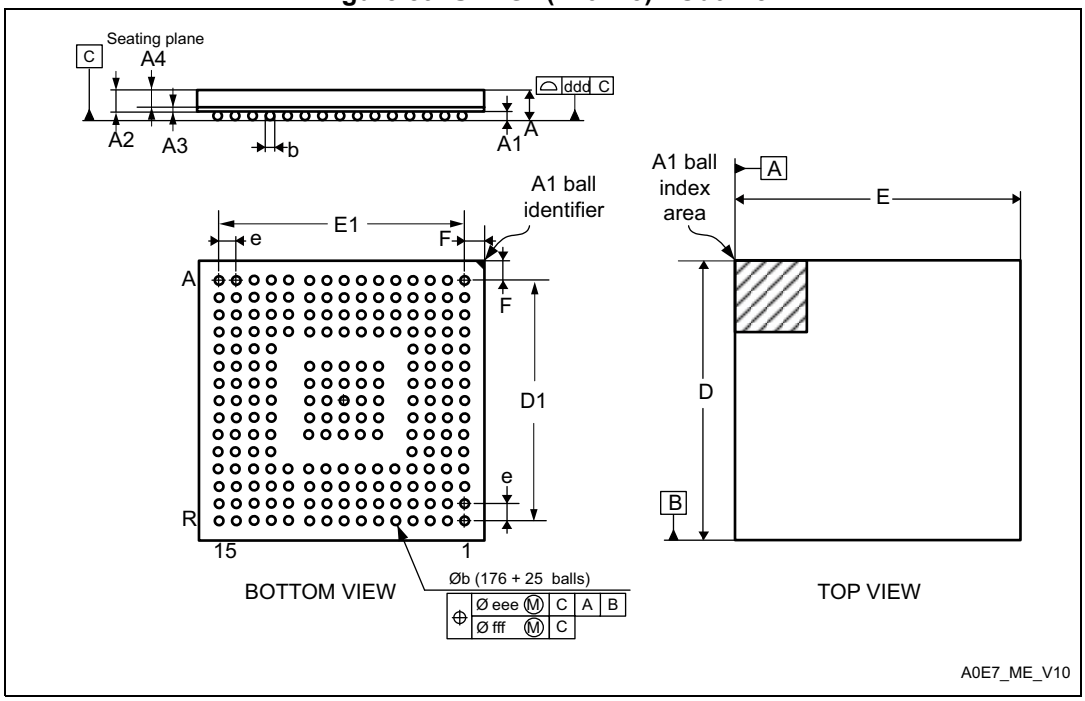

1. Drawing is not to scale.

Table 131. UFBGA(176+25) - Mechanical data

Symbol	millimeters			inches(1)		
	Min.	Typ.	Max.	Min.	Typ.	Max.
A	-	-	0.600	-	-	0.0236
A1	0.050	0.080	0.110	0.0020	0.0031	0.0043
A2	-	0.450	-	-	0.0177	-
A3	-	0.130	-	-	0.0051	-
A4	-	0.320	-	-	0.0126	-
b	0.240	0.290	0.340	0.0094	0.0114	0.0134
D	9.850	10.000	10.150	0.3878	0.3937	0.3996
D1	-	9.100	-	-	0.3583	-
E	9.850	10.000	10.150	0.3878	0.3937	0.3996
E1	-	9.100	-	-	0.3583	-
e	-	0.650	-	-	0.0256	-
F	-	0.450	-	-	0.0177	-
ddd	-	-	0.080	-	-	0.0031

Table 131. UFBGA(176+25) - Mechanical data (continued)

Symbol	millimeters			inches[1]		
	Min.	Typ.	Max.	Min.	Typ.	Max.
eee	-	-	0.150	-	-	0.0059
fff	-	-	0.050	-	-	0.0020

1. Values in inches are converted from mm and rounded to 4 decimal digits.

Figure 90. UFBGA(176+25) - Footprint example

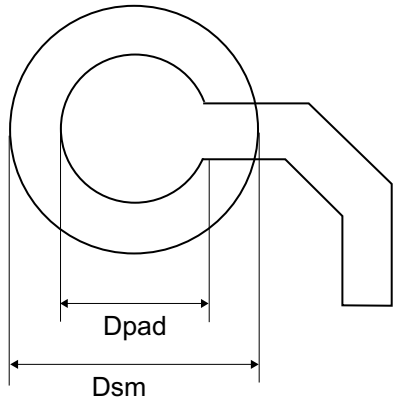

Table 132. UFBGA(176+25) - Example of PCB design rules (0.65 mm pitch BGA)

Dimension	Values
Pitch	0.65 mm
Dpad	0.300 mm
Dsm	0.400 mm typ. (depends on the soldermask registration tolerance)
Stencil opening	0.300 mm
Stencil thickness	Between 0.100 mm and 0.125 mm
Pad trace width	0.100 mm

7.7 WLCSP package information (A05G)

Figure 91. WLCSP 180-bump, 5.5 x 6 mm, 1.27 mm pitch wafer level chip scale package outline

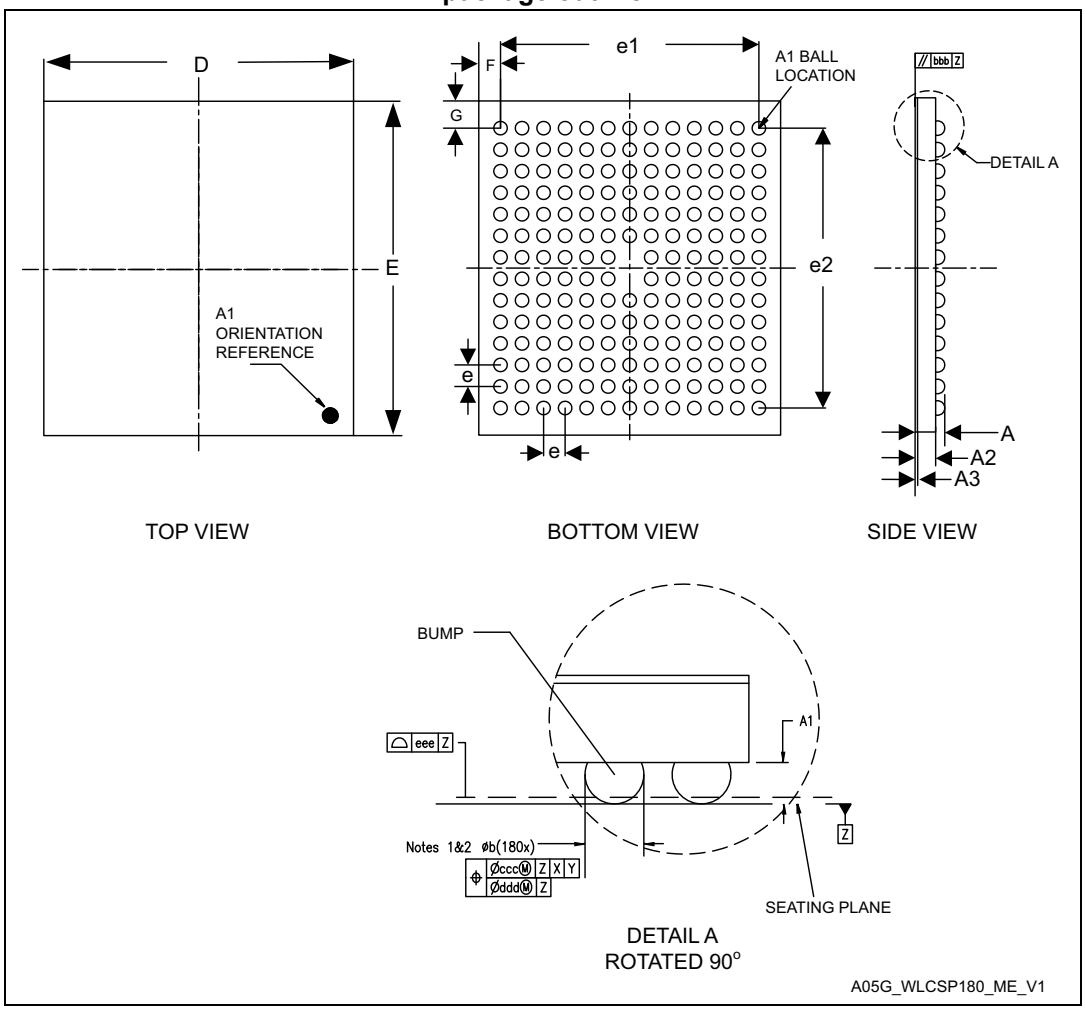

1. Drawing is not to scale.

Table 133. WLCSP 180-bump, 5.5 x 6 mm, 0.4 mm pitch wafer level chip scale package mechanical data

Symbol	millimeters			inches(1)		
	Min	Typ	Max	Min	Typ	Max
A	0.525	0.555	0.585	0.0207	0.0219	0.0230
A1	-	0.175	-	-	0.0069	-
A2	-	0.380	-	-	0.0150	-
A3	-	0.025	-	-	0.0010	-
b(2)	0.220	0.250	0.280	0.0087	0.0098	0.0110
D	5.502	5.537	5.572	0.2166	0.2180	0.2194
E	6.060	6.095	6.130	0.2386	0.2400	0.2413

Table 133. WLCSP 180-bump, 5.5 x 6 mm, 0.4 mm pitch wafer level chip scale package mechanical data (continued)

Symbol	millimeters			inches[1]		
	Min	Typ	Max	Min	Typ	Max
e	-	0.400	-	-	0.0157	-
e1	-	4.800	-	-	0.1890	-
e2	-	5.200	-	-	0.2047	-
F	-	0.368	-	-	0.0145	-
G	-	0.477	-	-	0.0188	-
aaa	-	0.110	-	-	0.0043	-
bbb	-	0.110	-	-	0.0043	-
ccc	-	0.110	-	-	0.0043	-
ddd	-	0.050	-	-	0.0020	-
eee	-	0.050	-	-	0.0020	-

1. Values in inches are converted from mm and rounded to 4 decimal digits.
2. Dimension is measured at the maximum bump diameter parallel to primary datum Z.

Figure 92. WLCSP 180-bump, 5.5 x 6 mm, 0.4 mm pitch wafer level chip scale package recommended footprint

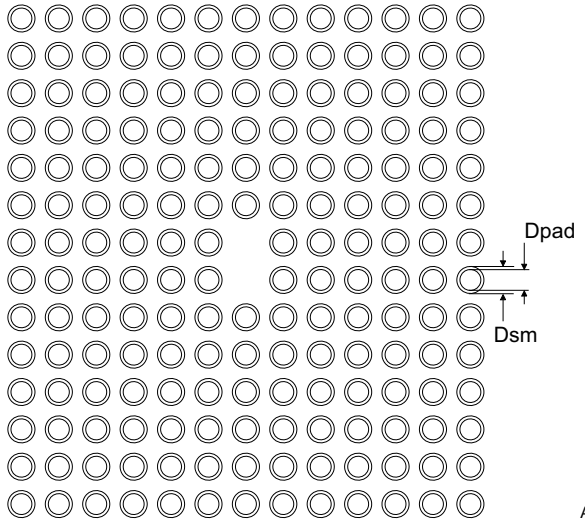

Table 134. WLCSP 180-bump, 5.5 x 6 mm, recommended PCB design rules (0.4 mm pitch)

Dimension	Recommended values
Pitch	0.4
Dpad	0.225 mm

Table 134. WLCSP 180-bump, 5.5 x 6 mm, recommended PCB design rules (0.4 mm pitch) (continued)

Dimension	Recommended values
Dsm	0.290 mm typ. (depends on the soldermask registration tolerance)
Stencil opening	0.250 mm
Stencil thickness	0.1 mm

WLCSP180 device marking

The following figure gives an example of topside marking orientation versus ball A1 identifier location.

The printed markings may differ depending on the supply chain.

Other optional marking or inset/upset marks, which identify the parts throughout supply chain operations, are not indicated below.

Figure 93. WLCSP180 top view example

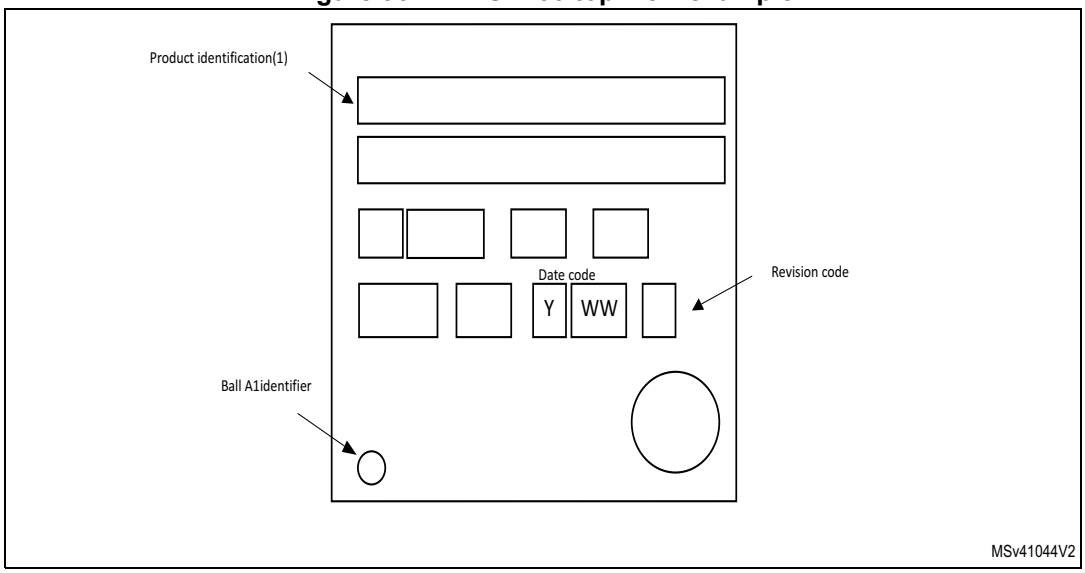

7.8 LQFP208 package information (UH)

This LQFP is a 208-pin, 28 x 28 mm low-profile quad flat package.

Note: See list of notes in the notes section.

Figure 94. LQFP208 - Outline(15)

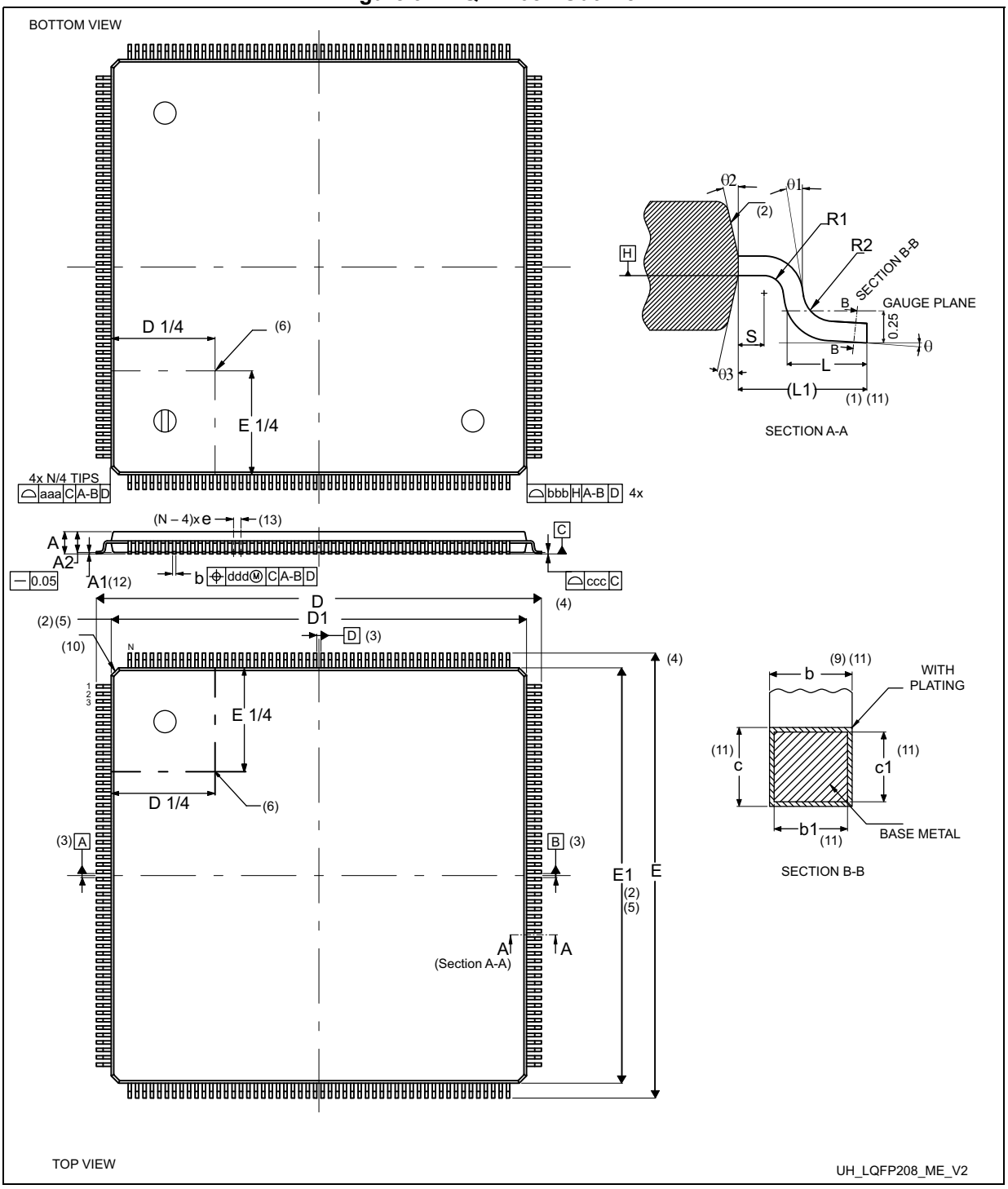

Table 135. LQFP208 - Mechanical data

Symbol	millimeters			inches[15]		
	Min	Typ	Max	Min	Typ	Max
A	-	-	1.60	-	-	0.0630
A1[11]	0.05	-	0.15	0.0020	-	0.0059
A2	1.35	1.40	1.45	0.0531	0.0551	0.0571
b[9][10]	0.17	0.22	0.27	0.0067	0.0087	0.0106
b1[10]	0.17	0.20	0.23	0.0067	0.0079	0.0091
c[10]	0.09	-	0.20	0.0035	-	0.0079
c1[10]	0.09	-	0.16	0.0035	-	0.0063
D[4]	30.00 BSC			1.1732 BSC		
D1[2][5]	28.00 BSC			1.0945 BSC		
E[4]	30.00 BSC			1.1732 BSC		
E1[2][5]	28.00 BSC			1.0945 BSC		
e	0.50 BSC			0.0197 BSC		
L	0.45	0.60	0.75	0.0177	0.0236	0.0295
L1	1.00 REF			0.0394 REF		
N[11]	208					
θ	0°	3.5°	7°	0°	3.5°	7°
θ1	0°	-	-	0°	-	-
θ2	10°	12°	14°	10°	12°	14°
θ3	10°	12°	14°	10°	12°	14°
R1	0.08	-	-	0.0031	-	-
R2	0.08	-	0.20	0.0031	-	0.0079
S	0.20	-	-	0.0079	-	-
aaa[1][7]	0.20			0.0079		
bbb[1][7]	0.20			0.0079		
ccc[1][7]	0.08			0.0031		
ddd[1][7]	0.08			0.0031		

Notes:

1. Dimensioning and tolerancing schemes conform to ASME Y14.5M-1994.
2. The Top package body size may be smaller than the bottom package size by as much as 0.15 mm.
3. Datums A-B and D to be determined at datum plane H.
4. To be determined at seating datum plane C.
5. Dimensions D1 and E1 do not include mold flash or protrusions. Allowable mold flash or protrusions is “0.25 mm” per side. D1 and E1 are Maximum plastic body size dimensions including mold mismatch.
6. Details of pin 1 identifier are optional but must be located within the zone indicated.
7. All Dimensions are in millimeters.
8. No intrusion allowed inwards the leads.
9. Dimension “b” does not include dambar protrusion. Allowable dambar protrusion shall not cause the lead width to exceed the maximum “b” dimension by more than 0.08 mm. Dambar cannot be located on the lower radius or the foot. Minimum space between protrusion and an adjacent lead is 0.07 mm for 0.4 mm and 0.5 mm pitch packages.
10. Exact shape of each corner is optional.
11. These dimensions apply to the flat section of the lead between 0.10 mm and 0.25 mm from the lead tip.
12. A1 is defined as the distance from the seating plane to the lowest point on the package body.
13. “N” is the number of terminal positions for the specified body size.
14. Values in inches are converted from mm and rounded to 4 decimal digits.
15. Drawing is not to scale.

Figure 95. LQFP208 - footprint example

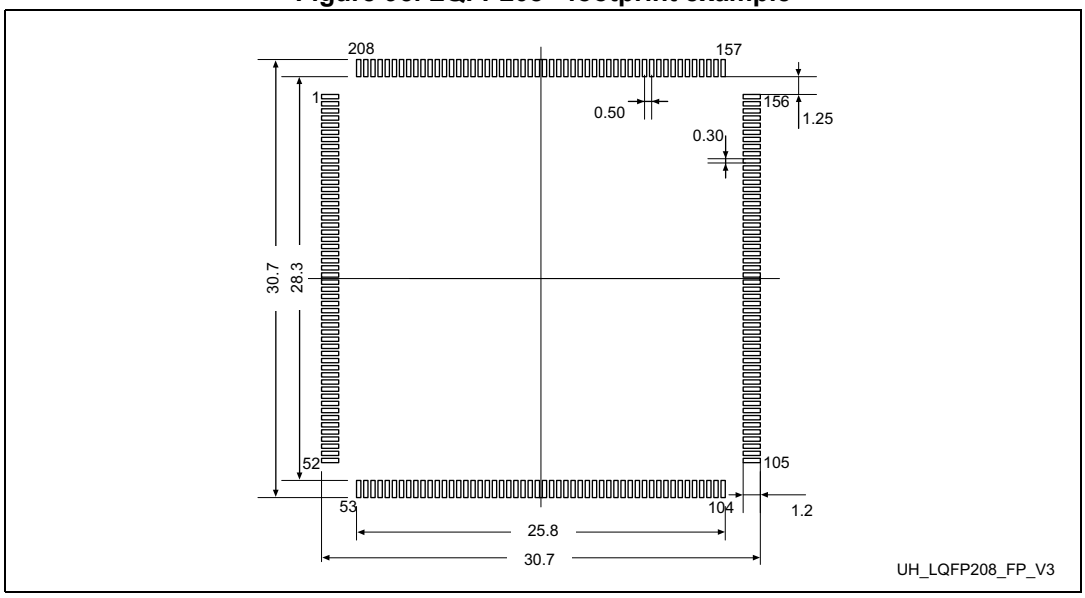

1. Dimensions are expressed in millimeters.

7.9 TFBGA216 package information (A0L2)

This TFBGA is a 216-ball, 13 x 13 mm, 0.8 mm pitch, fine pitch ball grid array package.

Figure 96. TFBGA216 - Outline

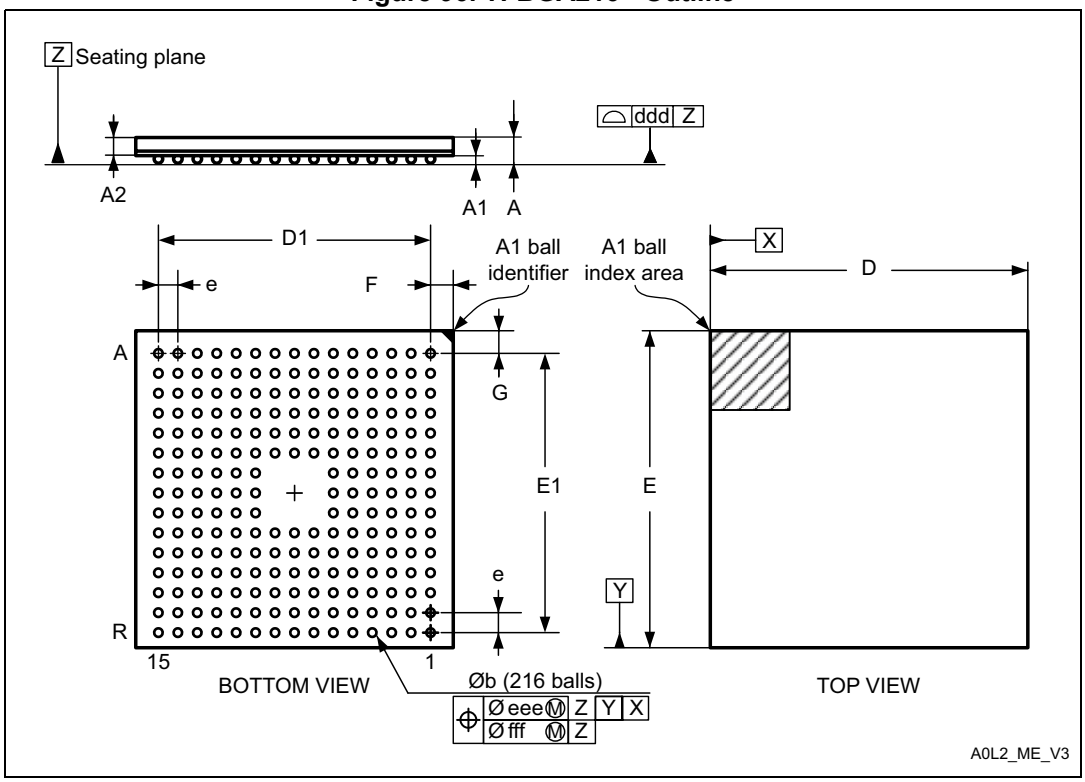

1. Drawing is not to scale.
2. • The terminal A1 corner must be identified on the top surface by using a corner chamfer, ink or metalized markings, or other feature of package body or integral heat slug.
   • A distinguishing feature is allowable on the bottom surface of the package to identify the terminal A1 corner. Exact shape of each corner is optional

Table 136. TFBGA216 - Mechanical data

Symbol	millimeters			inches[1]		
	Min	Typ	Max	Min	Typ	Max
A	-	-	1.200	-	-	0.0472
A1[2]	0.150	-	-	0.0059	-	-
A2	-	0.760	-	-	0.0299	-
b[3]	0.350	0.400	0.450	0.0138	0.0157	0.0177
D	12.850	13.000	13.150	0.5059	0.5118	0.5177
D1	-	11.200	-	-	0.4409	-
E	12.850	13.000	13.150	0.5059	0.5118	0.5177
E1	-	11.200	-	-	0.4409	-
e	-	0.800	-	-	0.0315	-
F	-	0.900	-	-	0.0354	-
G	-	0.900	-	-	0.0354	-
ddd	-	-	0.100	-	-	0.0039
eee[4]	-	-	0.150	-	-	0.0059
fff[5]	-	-	0.080	-	-	0.0031

1. Values in inches are converted from mm and rounded to four decimal digits.
2. • The terminal A1 corner must be identified on the top surface by using a corner chamfer, ink or metallized markings, or other feature of package body or integral heat slug.
   • A distinguishing feature is allowable on the bottom surface of the package to identify the terminal A1 corner. Exact shape of each corner is optional.
3. Initial ball equal 0.350 mm.
4. The tolerance of position that controls the location of the pattern of balls with respect to datums A and B. For each ball there is a cylindrical tolerance zone eee perpendicular to datum C and located on true position with respect to datums A and B as defined by e. The axis perpendicular to datum C of each ball must lie within this tolerance zone.
5. The tolerance of position that controls the location of the balls within the matrix with respect to each other. For each ball there is a cylindrical tolerance zone fff perpendicular to datum C and located on true position as defined by e. The axis perpendicular to datum C of each ball must lie within this tolerance zone. Each tolerance zone fff in the array is contained entirely in the respective zone eee above The axis of each ball must lie simultaneously in both tolerance zones.

Figure 97. TFBGA216 - Footprint example

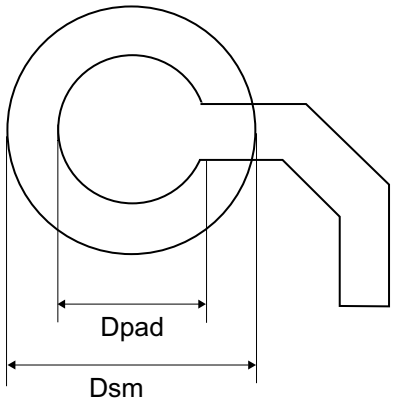

Table 137. TFBGA216 - Example of PCB design rules (0.8 mm pitch)

Dimension	Values
Pitch	0.8 mm
Dpad	0.400 mm
Dsm	0.470 mm typ. (depends on the soldermask registration tolerance)
Stencil opening	0.400 mm
Stencil thickness	Between 0.100 mm and 0.125 mm
Pad trace width	0.120 mm

7.10 Thermal characteristics

The maximum chip-junction temperature, T_J max, in degrees Celsius, may be calculated using the following equation:

T_J max = T_A max + (P_D max x Θ_{JA})

Where:

- T_A max is the maximum ambient temperature in °C,
- Θ_{JA} is the package junction-to-ambient thermal resistance, in °C/W,
- P_D max is the sum of P_{INT} max and $P_{I/O}$ max (P_D max = P_{INT} max + $P_{I/O}$max),
- P_{INT} max is the product of I_{DD} and V_{DD}, expressed in Watts. This is the maximum chip internal power.

$P_{I/O}$ max represents the maximum power dissipation on output pins where:

$$P_{I/O} \text{ max} = \sum (V_{OL} \times I_{OL}) + \sum((V_{DD} - V_{OH}) \times I_{OH}),$$

taking into account the actual V_{OL} / I_{OL} and V_{OH} / I_{OH} of the I/Os at low and high level in the application.

Table 138. Package thermal characteristics

Symbol	Parameter	Value	Unit
Θ_{JA}	**Thermal resistance junction-ambient** LQFP100 - 14 × 14 mm / 0.5 mm pitch	43	°C/W
	Thermal resistance junction-ambient TFBGA100 - 8 × 8 mm / 0.8 mm pitch	36.2	
	Thermal resistance junction-ambient WLCSP180 - 0.4 mm pitch	30	
	Thermal resistance junction-ambient LQFP144 - 20 × 20 mm / 0.5 mm pitch	40	
	Thermal resistance junction-ambient LQFP176 - 24 × 24 mm / 0.5 mm pitch	38	
	Thermal resistance junction-ambient LQFP208 - 28 × 28 mm / 0.5 mm pitch	19	
	Thermal resistance junction-ambient UFBGA176 - 10× 10 mm / 0.5 mm pitch	39	
	Thermal resistance junction-ambient TFBGA216 - 13 × 13 mm / 0.8 mm pitch	29	

Reference document

JESD51-2 Integrated Circuits Thermal Test Method Environment Conditions - Natural Convection (Still Air). Available from www.jedec.org.

8 Ordering information

Table 139. Ordering information scheme

Example: STM32 F 77x V G T 6 xxx

Device family

STM32 = Arm-based 32-bit microcontroller

Product type

F = general-purpose

Device subfamily

777= STM32F777xx, USB OTG FS/HS, camera interface, Ethernet, LCD-TFT, cryptographic acceleration
778 = STM32F778Ax, USB OTG FS/HS, camera interface, LCD-TFT and DSI host, WLCSP with internal regulator OFF, cryptographic acceleration
779= STM32F779xx, USB OTG FS/HS, camera interface, Ethernet, LCD-TFT and DSI host., cryptographic acceleration

Pin count

V = 100 pins

Z = 144 pins

I = 176 pins

A = 180 pins

B = 208 pins

N = 216 pins

Flash memory size

G = 1024 Kbytes of Flash memory

I = 2048 Kbytes of Flash memory

Package

T = LQFP

K = UFBGA

H = TFBGA

Y = WLCSP

Temperature range

6 = Industrial temperature range, –40 to 85 °C

7 = Industrial temperature range, –40 to 105 °C(1)

Options

xxx = programmed parts

TR = tape and reel

1. Not available for WLCSP packages.

For a list of available options (speed, package, etc.) or for further information on any aspect of this device, please contact your nearest ST sales office.

Appendix A Recommendations when using internal reset OFF

When the internal reset is OFF, the following integrated features are no longer supported:

- The integrated power-on reset (POR) / power-down reset (PDR) circuitry is disabled
- The brownout reset (BOR) circuitry must be disabled
- The embedded programmable voltage detector (PVD) is disabled
- V_{BAT} functionality is no more available and VBAT pin should be connected to V_{DD}

The over-drive mode is not supported

A.1 Operating conditions

Table 140. Limitations depending on the operating power supply range

Operating power supply range	ADC operation	Maximum Flash memory access frequency with no wait states ($f_{Flashmax}$)	Maximum Flash memory access frequency with wait states (1)(2)	I/O operation	Possible Flash memory operations
V_{DD} =1.7 to 2.1 V(3)	Conversion time up to 1.2 Msps	20 MHz	168 MHz with 8 wait states and over-drive OFF	– No I/O compensation	8-bit erase and program operations only

1. Applicable only when the code is executed from Flash memory. When the code is executed from RAM, no wait state is required.
2. Thanks to the ART accelerator on ITCM interface and L1-cache on AXI interface, the number of wait states given here does not impact the execution speed from the Flash memory since the ART accelerator or L1-cache allows to achieve a performance equivalent to 0-wait state program execution.
3. V_{DD}/V_{DDA} minimum value of 1.7 V, with the use of an external power supply supervisor (refer to *Section 3.18.1: Internal reset ON*).

Important security notice

The STMicroelectronics group of companies (ST) places a high value on product security, which is why the ST product(s) identified in this documentation may be certified by various security certification bodies and/or may implement our own security measures as set forth herein. However, no level of security certification and/or built-in security measures can guarantee that ST products are resistant to all forms of attacks. As such, it is the responsibility of each of ST's customers to determine if the level of security provided in an ST product meets the customer needs both in relation to the ST product alone, as well as when combined with other components and/or software for the customer end product or application. In particular, take note that:

- ST products may have been certified by one or more security certification bodies, such as Platform Security Architecture (www.psacertified.org) and/or Security Evaluation standard for IoT Platforms (www.trustcb.com). For details concerning whether the ST product(s) referenced herein have received security certification along with the level and current status of such certification, either visit the relevant certification standards website or go to the relevant product page on www.st.com for the most up to date information. As the status and/or level of security certification for an ST product can change from time to time, customers should re-check security certification status/level as needed. If an ST product is not shown to be certified under a particular security standard, customers should not assume it is certified.
- Certification bodies have the right to evaluate, grant and revoke security certification in relation to ST products. These certification bodies are therefore independently responsible for granting or revoking security certification for an ST product, and ST does not take any responsibility for mistakes, evaluations, assessments, testing, or other activity carried out by the certification body with respect to any ST product.
- Industry-based cryptographic algorithms (such as AES, DES, or MD5) and other open standard technologies which may be used in conjunction with an ST product are based on standards which were not developed by ST. ST does not take responsibility for any flaws in such cryptographic algorithms or open technologies or for any methods which have been or may be developed to bypass, decrypt or crack such algorithms or technologies.
- While robust security testing may be done, no level of certification can absolutely guarantee protections against all attacks, including, for example, against advanced attacks which have not been tested for, against new or unidentified forms of attack, or against any form of attack when using an ST product outside of its specification or intended use, or in conjunction with other components or software which are used by customer to create their end product or application. ST is not responsible for resistance against such attacks. As such, regardless of the incorporated security features and/or any information or support that may be provided by ST, each customer is solely responsible for determining if the level of attacks tested for meets their needs, both in relation to the ST product alone and when incorporated into a customer end product or application.
- All security features of ST products (inclusive of any hardware, software, documentation, and the like), including but not limited to any enhanced security features added by ST, are provided on an "AS IS" BASIS. AS SUCH, TO THE EXTENT PERMITTED BY APPLICABLE LAW, ST DISCLAIMS ALL WARRANTIES, EXPRESS OR IMPLIED, INCLUDING BUT NOT LIMITED TO THE IMPLIED WARRANTIES OF MERCHANTABILITY OR FITNESS FOR A PARTICULAR PURPOSE, unless the applicable written and signed contract terms specifically provide otherwise.

Revision history

Table 141. Document revision history

Date	Revision	Changes
21-Mar-2016	1	Initial release.
26-Apr-2016	2	DFSDM replaced by DFSDM1 in: Table 2: STM32F765xx, STM32F767xx, STM32F768Ax, and STM32F769xx pin and ball definitions. Table 4: STM32F765xx, STM32F767xx, STM32F768Ax, and STM32F769xx alternate function mapping. Table 14: STM32F777xx, STM32F778Ax and STM32F779xx register boundary addresses. Section 1.3.34: Digital filter for Sigma-Delta Modulators (DFSDM) characteristics. Updated Table 2: STM32F777xx, STM32F778Ax and STM32F779xx features and peripheral counts adding DFSDM1 features. Updated Table 26: Peripheral current consumption adding DFSDM1 current consumption. Updated cover in 2 pages. Updated cover replacing for SPI ‘up to 50 Mbit/s’ by ‘up to 54 Mbit/s’.
06-May-2016	3	Updated Table 2: STM32F777xx, STM32F778Ax and STM32F779xx features and peripheral counts GPIO number. Updated Table 4: STM32F765xx, STM32F767xx, STM32F768Ax, and STM32F769xx alternate function mapping adding CAN3_RX alternate function on PA8/AF11.
22-Dec-2016	4	Updated Table 98: Dynamics characteristics: Ethernet MAC signals for RMII. Updated Table 72: ADC characteristics sampling rate. Updated all the notes removing ‘not tested in production’. Updated Figure 46: SPI timing diagram - slave mode and CPHA = 0 and Figure 47: SPI timing diagram - slave mode and CPHA = 1(1) with modified NSS timing waveforms (among other changes). Updated Table 122: LTDC characteristics clock output frequency at 65 MHz. Updated Section 6.2: Absolute maximum ratings. Updated Section 7: Package information adding information about other optional marking or inset/upset marks.

Table 141. Document revision history (continued)

Date	Revision	Changes
09-Aug-2017	5	Updated note 1 below all the package device marking figures. Updated cover title. Updated Section 1: Introduction. Updated Section 3.47: DSI Host (DSIHOST) video mode interface features. Added Table 9: DFSDM implementation. Updated Figure 11: STM32F76xxx LQFP100 pinout pin 43 and pin 44. Updated Table 65: I/O current injection susceptibility note by ‘injection is not possible’. Updated Table 122: LTDC characteristics LTDC clock frequency at 83 MHz. Updated Table 72: ADC characteristics RADC min at 1.5 Kohm. Updated Figure 40: Recommended NRST pin protection note about the 0.1uF capacitor. Updated Table 83: DAC characteristics RLOAD feature.
05-Sep-2017	6	Added TFBGA100 package: – Updated cover page. – Updated Table 2: STM32F777xx, STM32F778Ax and STM32F779xx features and peripheral counts. – Updated Table 4: Regulator ON/OFF and internal reset ON/OFF availability. – Added Figure 12: STM32F76xxx TFBGA100 pinout. – Updated Table 11: STM32F765xx, STM32F767xx, STM32F768Ax, and STM32F769xx pin and ball definitions. – Updated Table 17: General operating conditions. – Updated Table 63: ESD absolute maximum ratings. – Updated note below Figure 43: Power supply and reference decoupling (VREF+ not connected to VDDA). – Updated note below Figure 44: Power supply and reference decoupling (VREF+ connected to VDDA). – Added Section 7.3: TFBGA100 package information. – Updated Table 7.3: Thermal characteristics.

Table 141. Document revision history (continued)

Date	Revision	Changes
20-Nov-2023	7	**Added the sections:** *Section 7.1: Device marking* *Section 9: Important security notice* **Removed** sections in: *Section 7: Package information* (obsolete content). Figure 71 NAND controller waveforms for common memory read access Figure 72 NAND controller waveforms for common memory write access **Updated the following sections:** *Section 6.3.5: Reset and power control block characteristics* (PLS[2:0]=101 (falling edge)). *Section : Features* (disclaimer). *Section 6.3.17: EMC characteristics* (Update of *Section Table 62.: EMI characteristics for fHSE= 8 MHz and fCPU= 200MHz (Setting 2)* and *Section Table 61.: EMI characteristics for fHSE= 8 MHz and fCPU= 200MHz (Setting 1)* *Section 6.3.7: Supply current characteristics* (Update of I/O system current consumption). *Section Figure 39.: I/O AC characteristics definition* (Updated the text in the image). *Section 6.3.7: Supply current characteristics* (Replaced *Typical connection diagram using the ADC* by *Section Figure 42.: Typical connection diagram when using the ADC with FT/TT pins featuring analog switch function*). *Table 2: STM32F777xx, STM32F778Ax and STM32F779xx features and peripheral counts* (Operating temperatures, GPIO). *Section 8: Ordering information* (Addition of a note). *Section 3.40: Random number generator (RNG)* (Update of the RNG section). *Section Table 123.: DFSDM measured timing 1.71-3.6V* ($DuCy_{CKOUT}$). *Section 6.3.9: External clock source characteristics* (High-speed external clock generated from a crystal/ceramic resonator, Low-speed external clock generated from a crystal/ceramic resonator). *Section Figure 16.: STM32F77xxx UFBGA176 ballout* (addition of a note). *Section 6.3.20: I/O port characteristics* (Addition of a note). *Section 3.26: Serial peripheral interface (SPI)/inter- integrated sound interfaces (I2S)* (SPI2 and SPI3 values). *Table 45: HSI oscillator characteristics* (Update of a footnote). *Figure 46: SPI timing diagram - slave mode and CPHA = 0* *Figure 47: SPI timing diagram - slave mode and CPHA = 1* *Figure 48: SPI timing diagram - master mode* *Figure 69: NAND controller waveforms for read access* *Figure 70: NAND controller waveforms for write access* Applied minor terminology changes to the whole document.

Table 141. Document revision history (continued)

Date	Revision	Changes
30-Jul-2025	8	**Updated:** – Title for *Section 3.40: True random number generator (RNG)* – AMR formula in *Table 14: Voltage characteristics* – Changed “master/slave” terminology into “controller/target” in *Section 3.24: Inter-integrated circuit interface (I^2C)* to align with the I2C specification. – LP Emitter Output Characteristics in *MIPI D-PHY characteristics* – V_{prog} 32-bit program operation maximum value from 3 V to 3.6 V

IMPORTANT NOTICE – PLEASE READ CAREFULLY

STMicroelectronics NV and its subsidiaries (“ST”) reserve the right to make changes, corrections, enhancements, modifications, and improvements to ST products and/or to this document at any time without notice. Purchasers should obtain the latest relevant information on ST products before placing orders. ST products are sold pursuant to ST’s terms and conditions of sale in place at the time of order acknowledgement.

Purchasers are solely responsible for the choice, selection, and use of ST products and ST assumes no liability for application assistance or the design of Purchasers’ products.

No license, express or implied, to any intellectual property right is granted by ST herein.

Resale of ST products with provisions different from the information set forth herein shall void any warranty granted by ST for such product.

ST and the ST logo are trademarks of ST. For additional information about ST trademarks, please refer to *www.st.com/trademarks*. All other product or service names are the property of their respective owners.

Information in this document supersedes and replaces information previously supplied in any prior versions of this document.

© 2025 STMicroelectronics – All rights reserved