STGB10NC60KDT4, STGD10NC60KDT4
STGF10NC60KD, STGP10NC60KD

Datasheet

10 A, 600 V short-circuit rugged IGBT

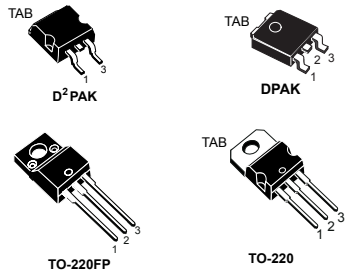

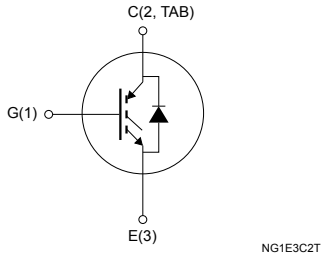

Features

- Lower on voltage drop ($V_{CE(sat)}$)
- Lower C_{res} / C_{ies} ratio (no cross-conduction susceptibility)
- Very soft ultra-fast recovery antiparallel diode
- Short-circuit withstand time 10 µs

Applications

- High frequency motor controls
- SMPS and PFC in both hard switch and resonant topologies
- Motor drives

Description

These devices are very fast IGBTs developed using advanced PowerMESH technology. This process guarantees an excellent trade-off between switching performance and low on-state behavior. These devices are well-suited for resonant or soft-switching applications.

Product status links
STGB10NC60KDT4
STGD10NC60KDT4
STGF10NC60KD
STGP10NC60KD

1 Electrical ratings

Table 1. Absolute maximum ratings

Symbol	Parameter	Value			Unit
		D²PAK, TO-220	DPAK	TO-220FP	
V_{CES}	Collector-emitter voltage (V_{GE} = 0 V)	600			V
I_C[1]	Continuous collector current at T_C = 25 °C	20		9	A
	Continuous collector current at T_C = 100 °C	10		6	
I_{CL}[2]	Turn-off latching current	30			A
I_{CP}[3]	Pulsed collector current	30			A
V_{GE}	Gate-emitter voltage	±20			V
I_F	Diode RMS forward current at T_C = 25 °C	10			A
I_{FSM}	Surge non repetitive forward current t_p = 10 ms sinusoidal	20			A
V_{ISO}	Insulation withstand voltage (RMS) from all three leads to external heat sink (t = 1 s, T_C = 25 °C)			2.5	kV
t_{scw}	Short-circuit withstand time V_{CE} = 0.5, V_{CES}, T_J = 125 °C, R_G = 10 Ω, V_{GE} = 12 V	10			µs
P_{TOT}	Total power dissipation at T_C = 25 °C	65	62	25	W
T_{stg}	Storage temperature range	-55 to 150			°C
T_J	Operating junction temperature range				°C

1. *Calculated according to the iterative formula:* $I_C(T_C) = \frac{T_{J(\max)} - T_C}{R_{thJC} \times V_{CE(sat)(\max)}\left(T_{J(\max)}, I_C(T_C)\right)}$
2. *V_{clamp} = 80% V_{CES}, T_J =150 °C, R_G = 10 Ω, V_{GE} = 15 V.*
3. *Pulse width limited by maximum junction temperature and turn-off within RBSOA.*

Table 2. Thermal data

Symbol	Parameter	Value			Unit
		D²PAK, TO-220	DPAK	TO-220FP	
R_{thJC}	Thermal resistance, junction-to-case IGBT	1.9	2	5	°C/W
	Thermal resistance, junction-to-case diode	4	4.5	7	
R_{thJA}	Thermal resistance, junction-to-ambient	62.5	100	62.5	°C/W

2 Electrical characteristics

T_C = 25 °C unless otherwise specified

Table 3. Static

Symbol	Parameter	Test conditions	Min.	Typ.	Max.	Unit
$V_{(BR)CES}$	Collector-emitter breakdown voltage	V_{GE} = 0 V, I_C = 1 mA	600			V
$V_{CE(sat)}$	Collector-emitter saturation voltage	V_{GE} = 15 V, I_C = 5 A		2.2	2.5	V
		V_{GE} = 15 V, I_C = 5 A, T_J = 150 °C		1.8		
$V_{GE(th)}$	Gate threshold voltage	V_{CE} = V_{GE}, I_C = 250 µA	4.5		6.5	V
I_{CES}	Collector cut-off current	V_{GE} = 0 V, V_{CE} = 600 V			0.15	mA
		V_{GE} = 0 V, V_{CE} = 600 V, T_J = 125 °C (1)			1	
I_{GES}	Gate-emitter leakage current	V_{CE} = 0 V, V_{GE} = ±20 V			±100	nA
g_{fs} (2)	Forward transconductance	V_{CE} = 15 V, I_C = 5 A		15		S

1. *Specified by design, not tested in production.*
2. *Pulsed: pulse duration = 300 µs, duty cycle 1.5%.*

Table 4. Dynamic

Symbol	Parameter	Test conditions	Min.	Typ.	Max.	Unit
C_{ies}	Input capacitance	V_{CE} = 25 V, f = 1 MHz, V_{GE} = 0 V	-	380	-	pF
C_{oes}	Output capacitance		-	46	-	pF
C_{res}	Reverse transfer capacitance		-	8.5	-	pF
Q_g	Total gate charge	V_{CC} = 390 V, I_C = 5 A, V_{GE} = 0 to 15 V (see Figure 19. Gate charge test circuit)	-	19	-	nC
Q_{ge}	Gate-emitter charge		-	5	-	nC
Q_{gc}	Gate-collector charge		-	9	-	nC

Table 5. Switching on/off (inductive load)

Symbol	Parameter	Test conditions	Min.	Typ.	Max.	Unit
$t_{d(on)}$	Turn-on delay time	V_{CC} = 390 V, I_C = 5 A,	-	17	-	ns
t_r	Current rise time	R_G = 10 Ω, V_{GE} = 15 V	-	6	-	ns
$(di/dt)_{on}$	Turn-on current slope	(see Figure 17. Test circuit for inductive load switching and Figure 20. Switching waveform)	-	655	-	A/µs
$t_{d(on)}$	Turn-on delay time	V_{CC} = 390 V, I_C = 5 A,	-	16.5	-	ns
t_r	Current rise time	R_G = 10 Ω, V_{GE} = 15 V, T_J = 125 °C	-	6.5	-	ns
$(di/dt)_{on}$	Turn-on current slope	(see Figure 17. Test circuit for inductive load switching and Figure 20. Switching waveform)	-	575	-	A/µs
$t_r(V_{off})$	Off voltage rise time	V_{CC} = 390 V, I_C = 5 A,	-	33	-	ns
$t_{d(off)}$	Turn-off delay time	R_G = 10 Ω, V_{GE} = 15 V	-	72	-	ns
t_f	Current fall time	(see Figure 17. Test circuit for inductive load switching and Figure 20. Switching waveform)	-	82	-	ns
$t_r(V_{off})$	Off voltage rise time	V_{CC} = 390 V, I_C = 5 A,	-	60	-	ns
$t_{d(off)}$	Turn-off delay time	R_G = 10 Ω, V_{GE} = 15 V, T_J = 125 °C	-	106	-	ns
t_f	Current fall time	(see Figure 17. Test circuit for inductive load switching and Figure 20. Switching waveform)	-	136	-	ns

Table 6. Switching energy (inductive load)

Symbol	Parameter	Test conditions	Min.	Typ.	Max.	Unit
E_{on} (1)	Turn-on switching energy	V_{CE} = 390 V, I_C = 5 A,	-	55	-	µJ
E_{off} (2)	Turn-off switching energy	R_G = 10 Ω, V_{GE} = 15 V	-	85	-	µJ
E_{ts}	Total switching energy	(see Figure 17. Test circuit for inductive load switching	-	140	-	µJ
E_{on} (1)	Turn-on switching energy	V_{CE} = 390 V, I_C = 5 A,	-	87	-	µJ
E_{off} (2)	Turn-off switching energy	R_G = 10 Ω, V_{GE} = 15 V, T_J = 125 °C	-	162	-	µJ
E_{ts}	Total switching energy	(see Figure 17. Test circuit for inductive load switching	-	249	-	µJ

1. *Including the reverse recovery of the diode.*
2. *Including the tail of the collector current.*

Table 7. Diode switching characteristics (inductive load)

Symbol	Parameter	Test conditions	Min.	Typ.	Max.	Unit
V_F	Forward on-voltage	I_F = 5 A	-	2	-	V
		I_F = 5 A, T_J = 125 °C	-	1.6	-	
t_{rr}	Reverse recovery time	I_F = 5 A, V_R = 40 V, di/dt = 100 A/µs (see Figure 18. Diode reverse recovery waveform)	-	22	-	ns
Q_{rr}	Reverse recovery charge		-	14	-	nC
I_{rrm}	Reverse recovery current		-	1.3	-	A
t_{rr}	Reverse recovery time	I_F = 5 A, V_R = 40 V, di/dt = 100 A/µs, T_J = 125 °C (see Figure 18. Diode reverse recovery waveform)	-	35	-	ns
Qrr	Reverse recovery charge		-	40	-	nC
I_{rr}	Reverse recovery current		-	2.2	-	A

2.1 Electrical characteristics (curves)

Figure 1. Typical output characteristics

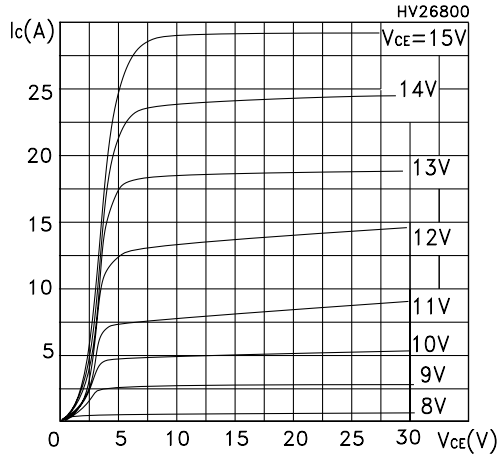

Figure 2. Typical transfer characteristics

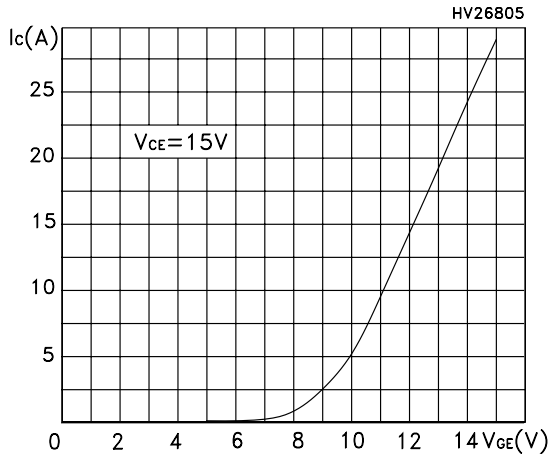

Figure 3. Typical transconductance characteristics

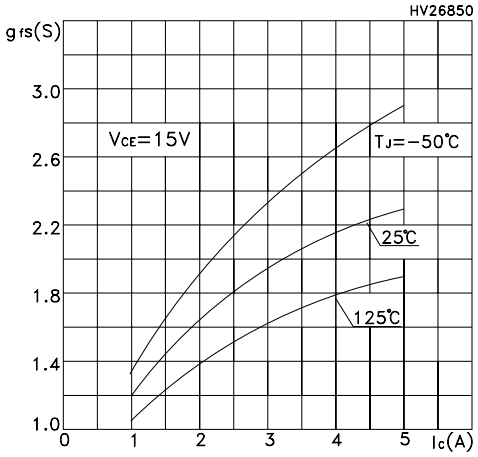

Figure 4. Typical collector-emitter on voltage vs temperature

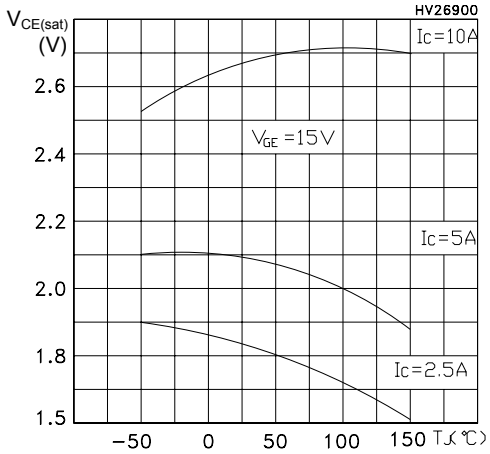

Figure 5. Typical gate charge characteristics

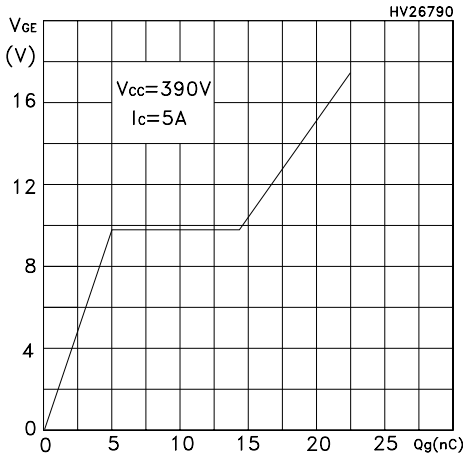

Figure 6. Typical capacitance characteristics

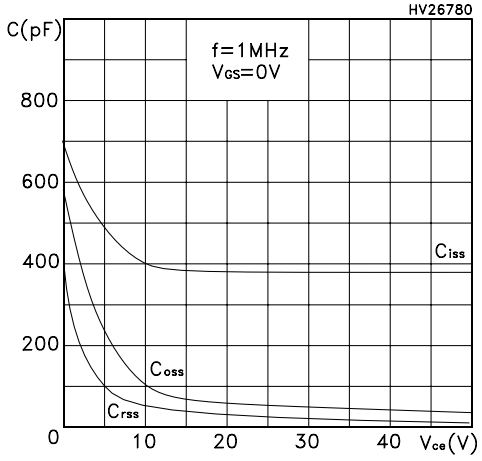

Figure 7. Normalized gate threshold vs temperature

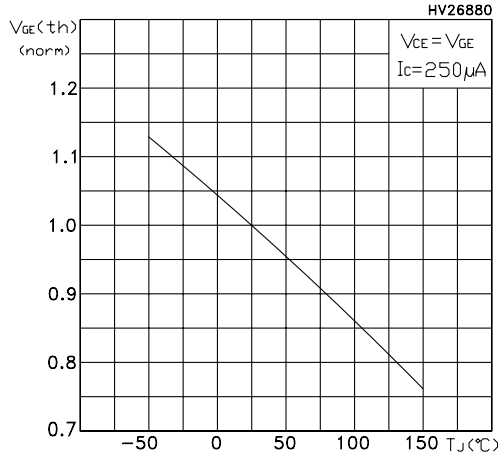

Figure 8. Typical collector-emitter on voltage vs collector current

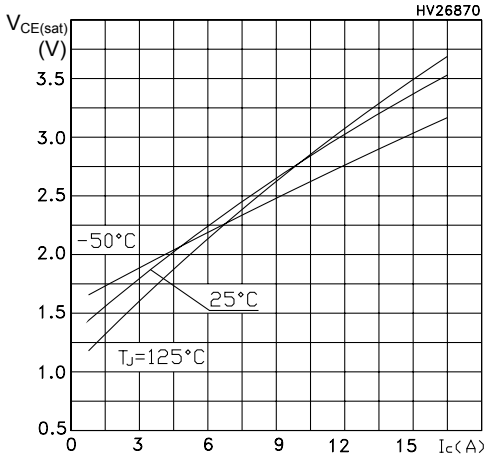

Figure 9. Normalized breakdown voltage vs temperature

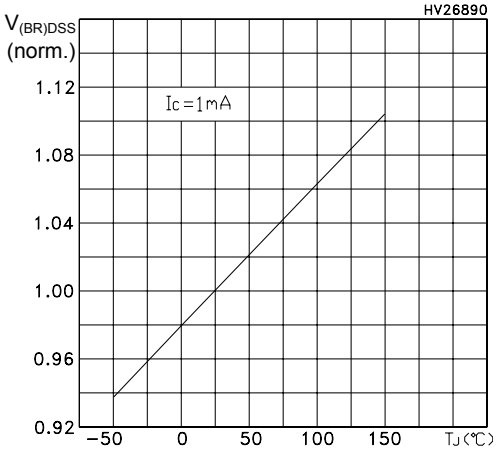

Figure 10. Typical switching energy vs temperature

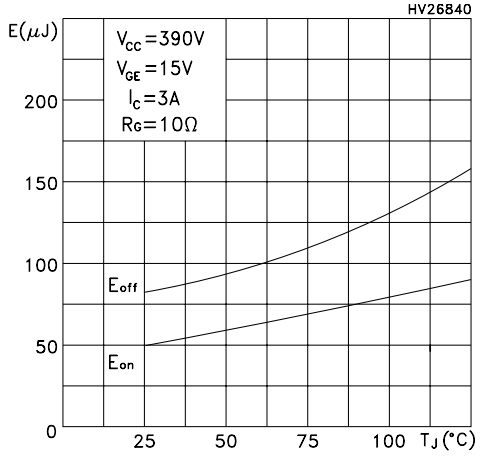

Figure 11. Typical switching energy vs gate resistance

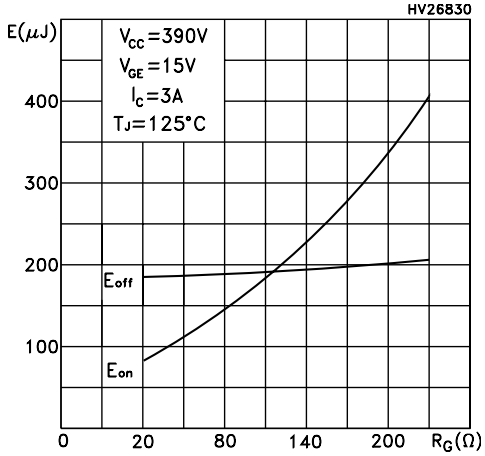

Figure 12. Typical switching energy vs collector current

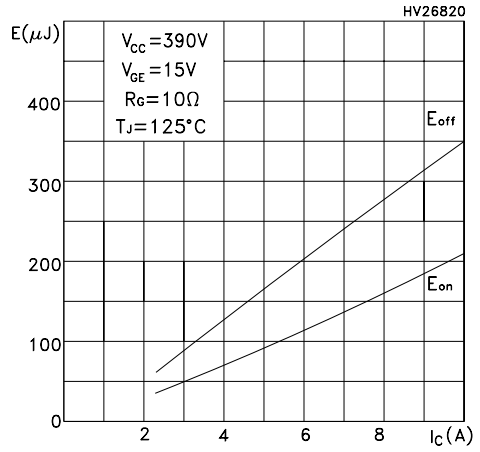

Figure 13. Reverse bias safe operating area

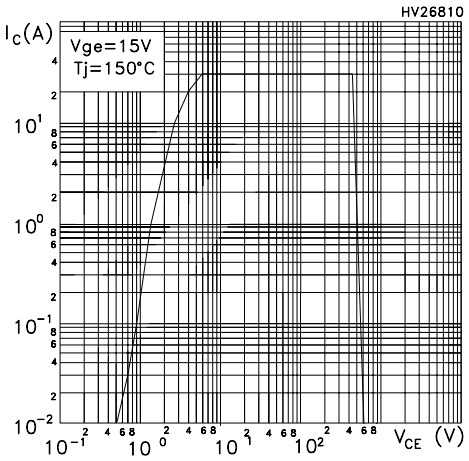

Figure 14. Normalized transient thermal impedance for D²PAK, DPAK and TO-220

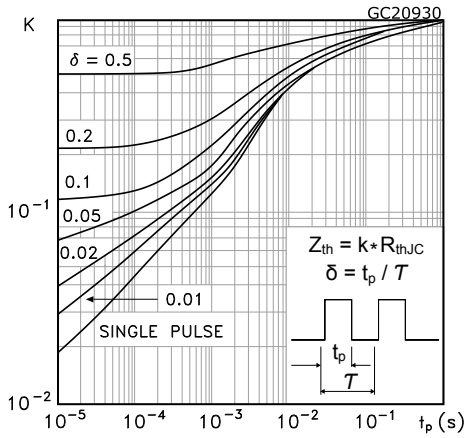

Figure 15. Normalized transient thermal impedance for TO-220FP

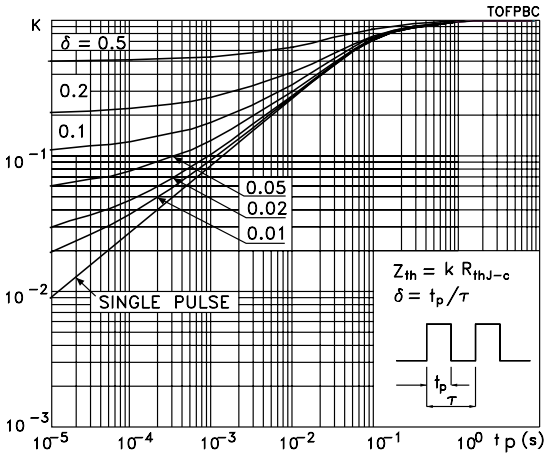

Figure 16. Typical emitter-collector diode characteristics

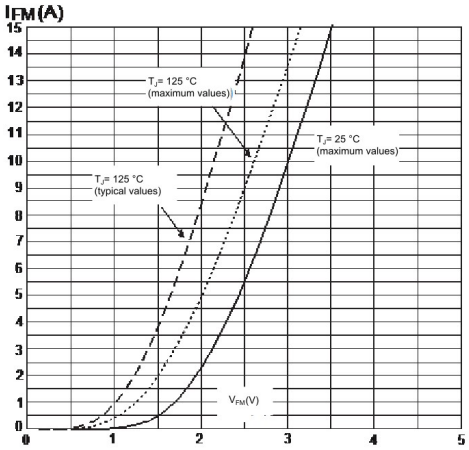

3 Test circuits

Figure 17. Test circuit for inductive load switching

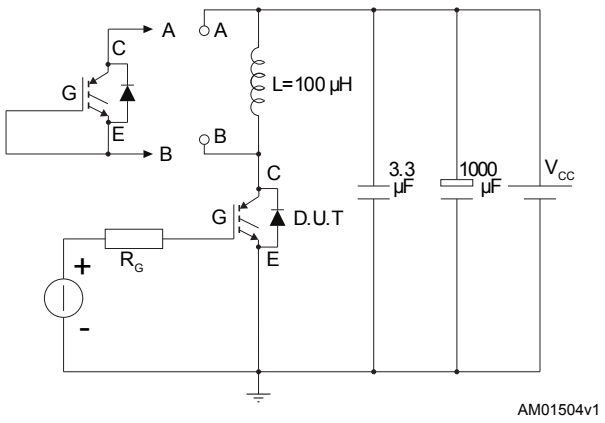

Figure 18. Diode reverse recovery waveform

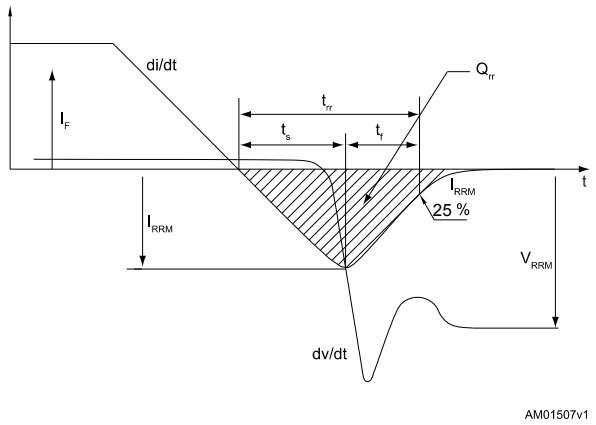

Figure 19. Gate charge test circuit

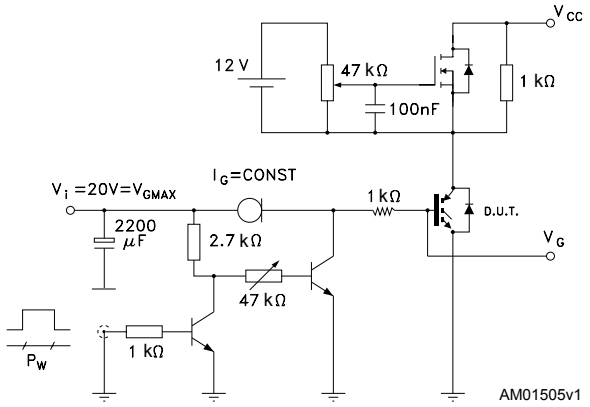

Figure 20. Switching waveform

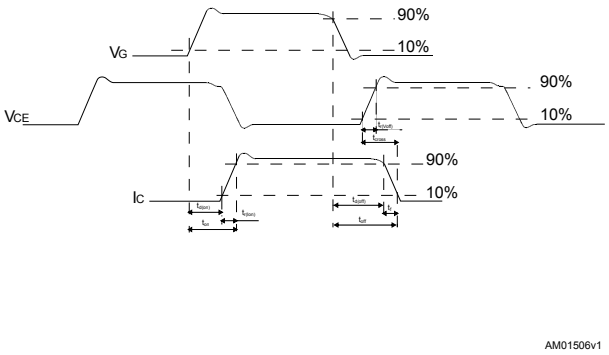

4 Package information

To meet environmental requirements, ST offers these devices in different grades of ECOPACK packages, depending on their level of environmental compliance. ECOPACK specifications, grade definitions, and product status are available at: www.st.com. ECOPACK is an ST trademark.

4.1 D²PAK (TO-263) type A package information

Figure 21. D²PAK (TO-263) type A package outline

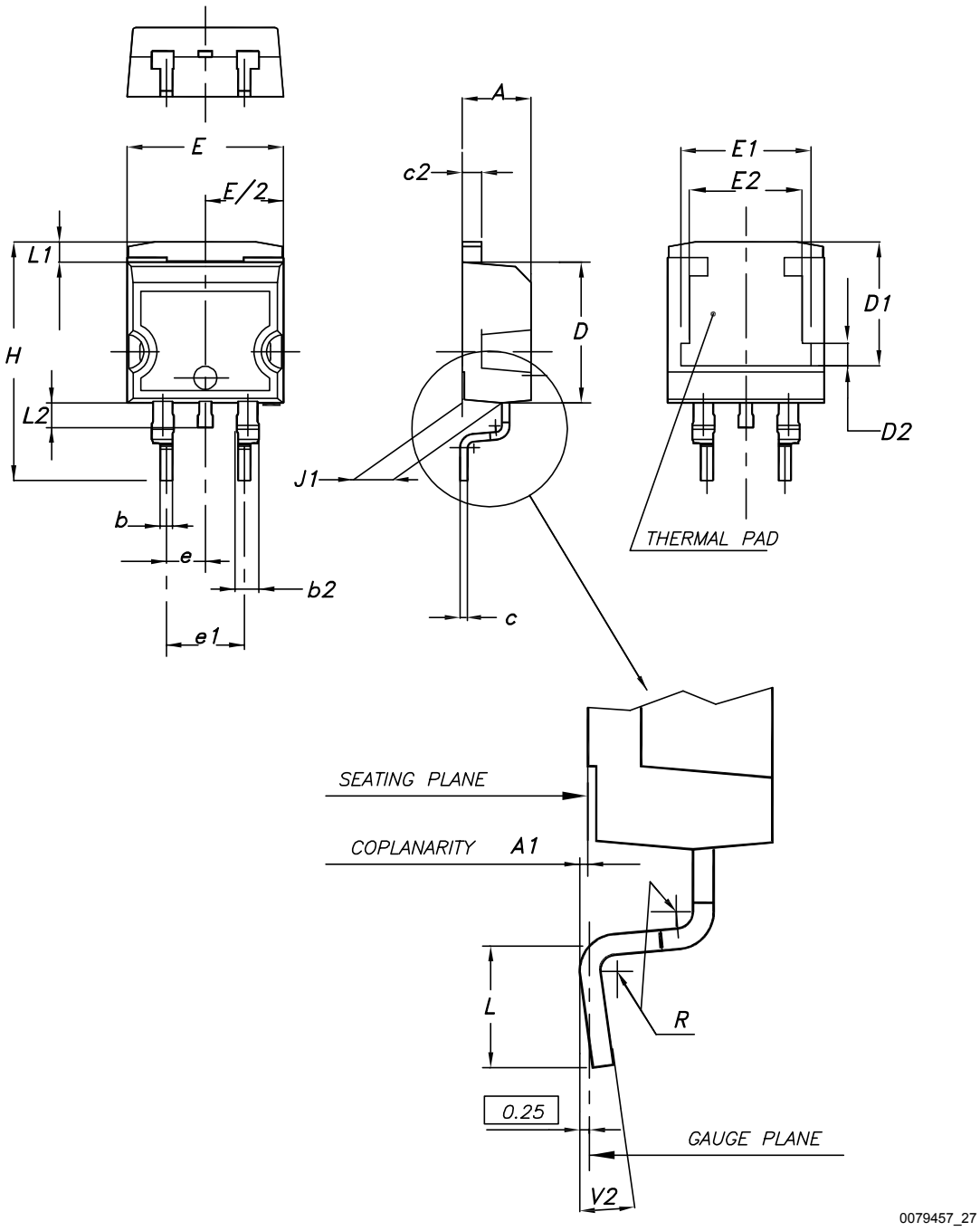

Table 8. D²PAK (TO-263) type A package mechanical data

Dim.	mm		
	Min.	Typ.	Max.
A	4.40		4.60
A1	0.03		0.23
b	0.70		0.93
b2	1.14		1.70
c	0.45		0.60
c2	1.23		1.36
D	8.95		9.35
D1	7.50	7.75	8.00
D2	1.10	1.30	1.50
E	10.00		10.40
E1	8.30	8.50	8.70
E2	6.85	7.05	7.25
e		2.54	
e1	4.88		5.28
H	15.00		15.85
J1	2.49		2.69
L	2.29		2.79
L1	1.27		1.40
L2	1.30		1.75
R		0.40	
V2	0°		8°

4.2 D²PAK (TO-263) type B package information

Figure 22. D²PAK (TO-263) type B package outline

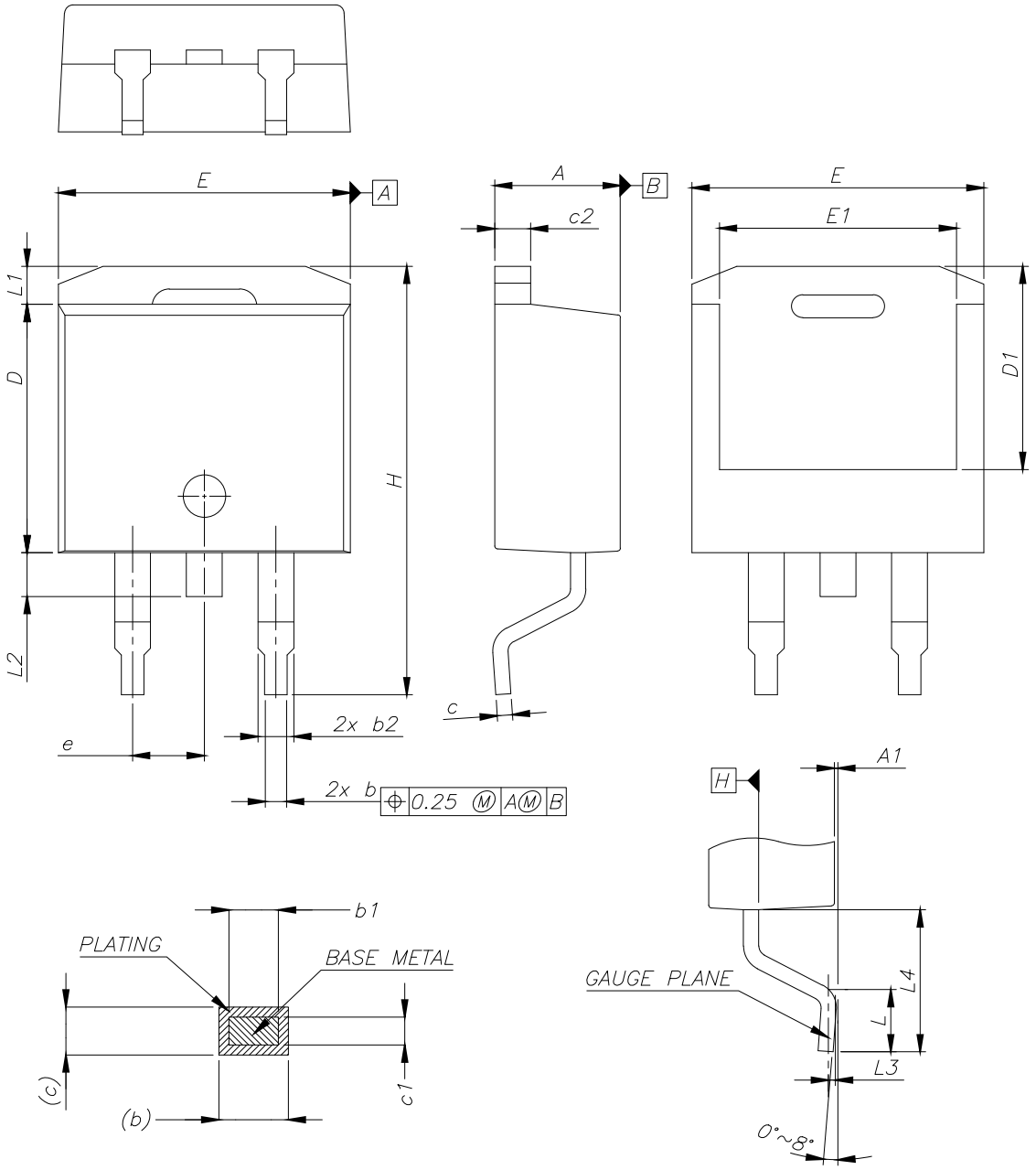

0079457_27_B

Table 9. D²PAK (TO-263) type B mechanical data

Dim.	mm		
	Min.	Typ.	Max.
A	4.36		4.56
A1	0.00		0.25
b	0.70		0.90
b1	0.51		0.89
b2	1.17		1.37
c	0.38		0.694
c1	0.38		0.534
c2	1.19		1.34
D	8.60		9.00
D1	6.90		7.50
E	10.15		10.55
E1	8.10		8.70
e	2.54 BSC		
H	15.00		15.60
L	1.90		2.50
L1			1.65
L2			1.78
L3		0.25	
L4	4.78		5.28

Figure 23. D²PAK (TO-263) recommended footprint (dimensions are in mm)

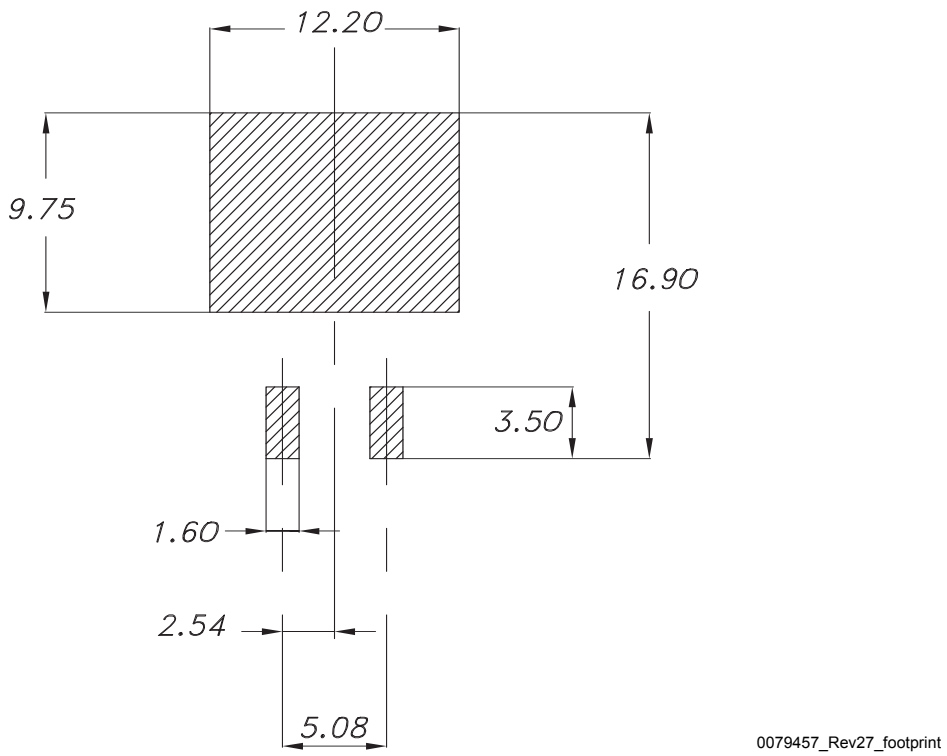

4.3 DPAK (TO-252) type A package information

Figure 24. DPAK (TO-252) type A package outline

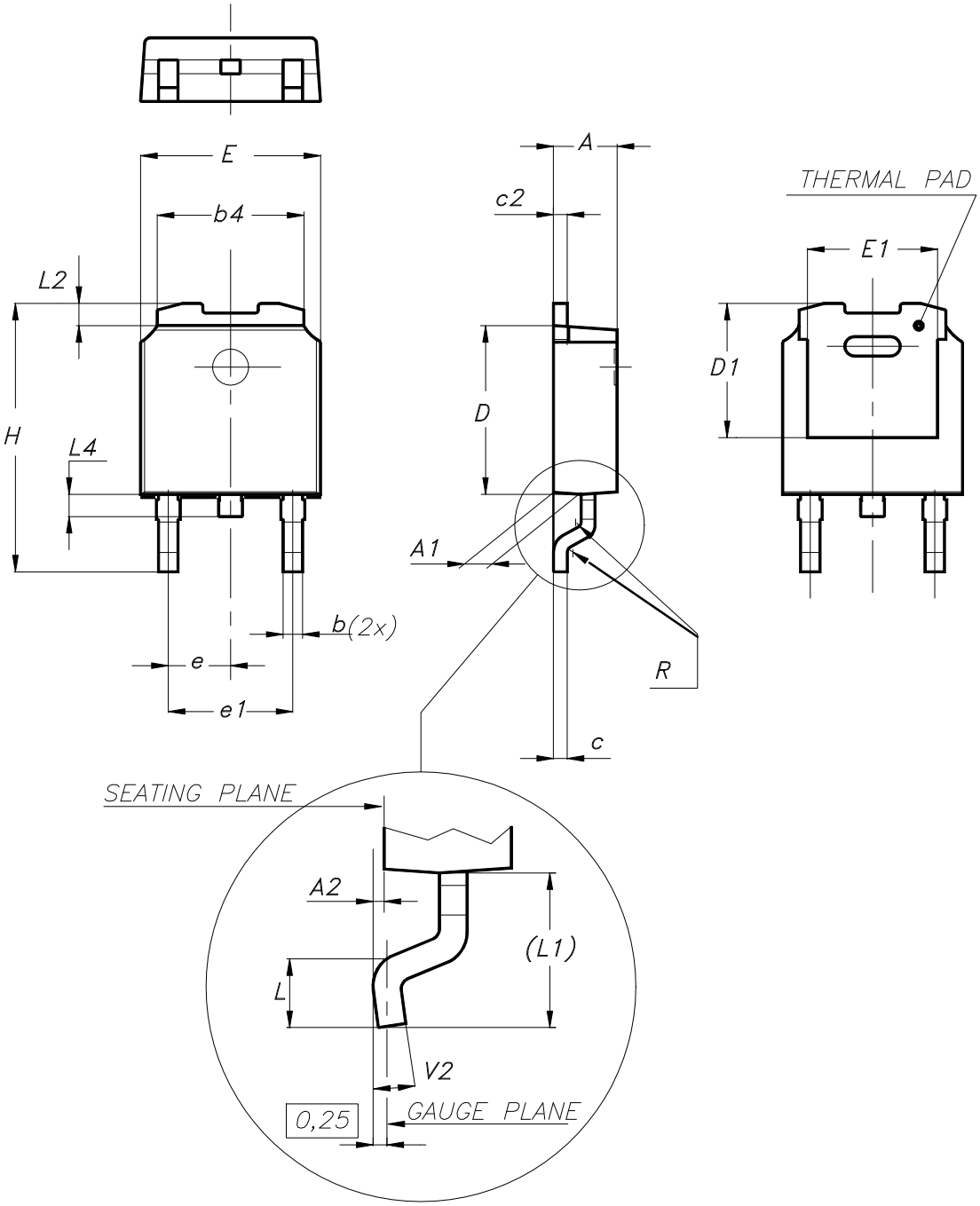

0068772_A_35

Table 10. **DPAK (TO-252) type A mechanical data**

Dim.	mm		
	Min.	Typ.	Max.
A	2.20		2.40
A1	0.90		1.10
A2	0.03		0.23
b	0.64		0.90
b4	5.20		5.40
c	0.45		0.60
c2	0.48		0.60
D	6.00		6.20
D1	4.95	5.10	5.25
E	6.40		6.60
E1	4.60	4.70	4.80
e	2.159	2.286	2.413
e1	4.445	4.572	4.699
H	9.35		10.10
L	1.00		1.50
(L1)	2.60	2.80	3.00
L2	0.65	0.80	0.95
L4	0.60		1.00
R		0.20	
V2	0°		8°

4.4 DPAK (TO-252) type C3 package information

Figure 25. DPAK (TO-252) type C3 package outline

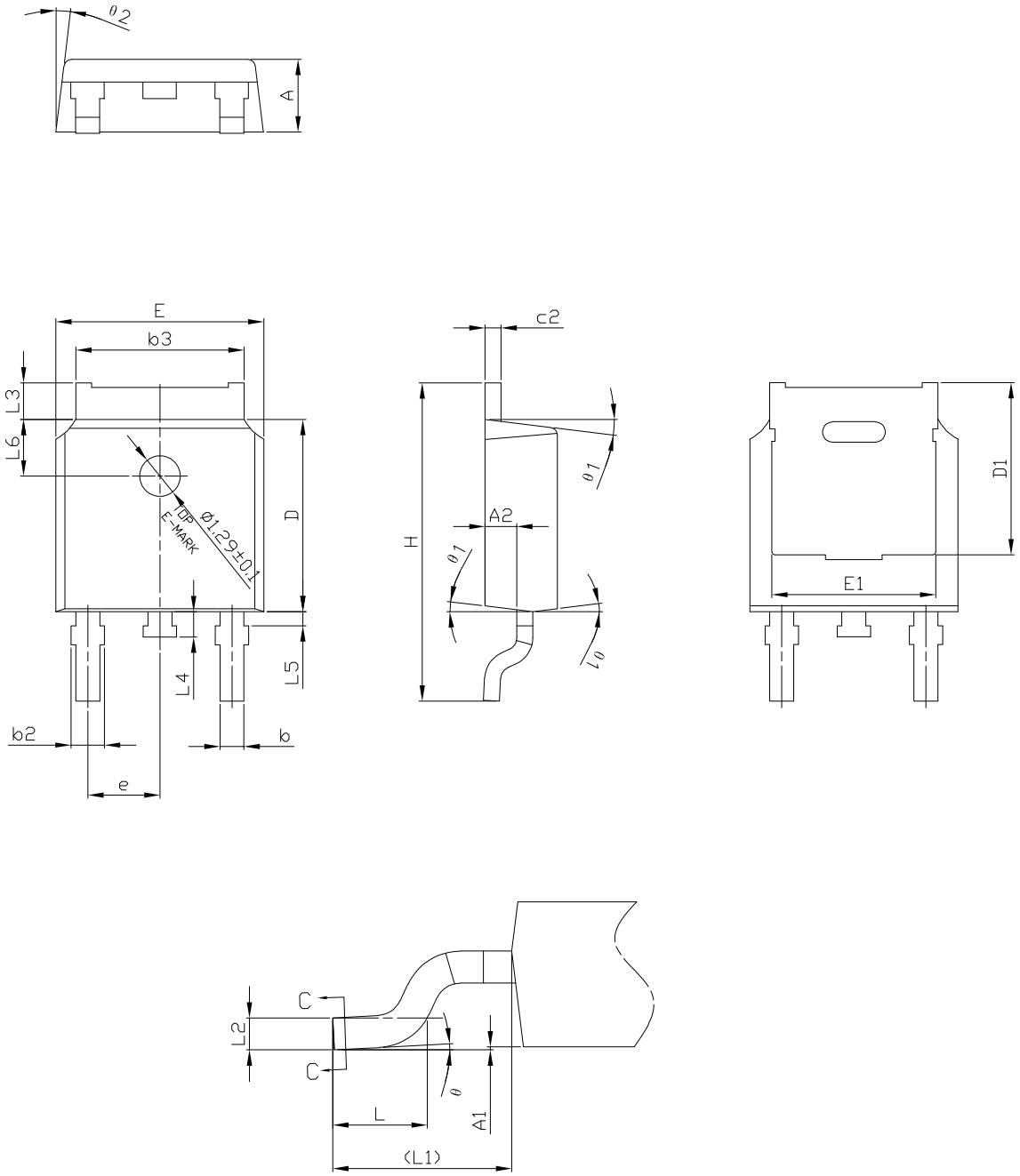

0068772_type-C3_rev35

Table 11. **DPAK (TO-252) type C3 mechanical data**

Dim.	mm		
	Min.	Typ.	Max.
A	2.20	2.30	2.38
A1	0.00		0.10
A2	0.90	1.01	1.10
b	0.72		0.85
b2	0.72		1.10
b3	5.13	5.33	5.46
c	0.47		0.60
c2	0.47		0.60
D	6.00	6.10	6.20
D1	5.20	5.45	5.70
E	6.50	6.60	6.70
E1	5.00	5.20	5.40
e	2.186	2.286	2.386
H	9.80	10.10	10.40
L	1.40	1.50	1.70
L1	2.90 REF		
L2	0.51 BSC		
L3	0.90		1.25
L4	0.60	0.80	1.00
L5	0.15		0.75
L6	1.80 REF		
θ	0°		8°
θ1	5°	7°	9°
θ2	5°	7°	9°

Figure 26. DPAK (TO-252) recommended footprint (dimensions are in mm)

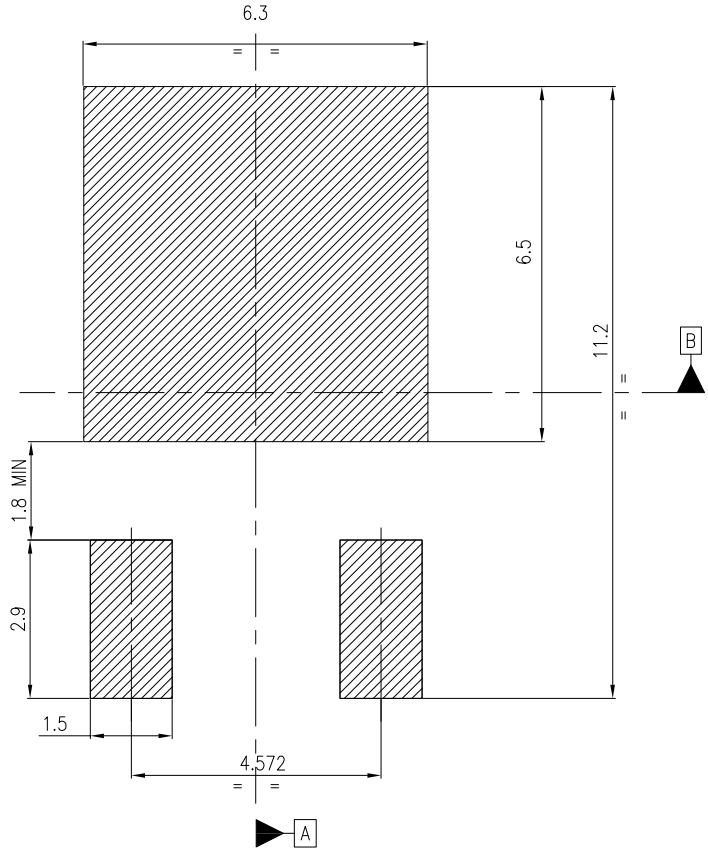

Notes:

1) This footprint is able to ensure insulation up to 630 Vrms (according to CEI IEC 664–1)

2) The device must be positioned within ⊕ 0.05 A B

FP_0068772_35

4.5 TO-220FP type B package information

Figure 27. TO-220FP type B package outline

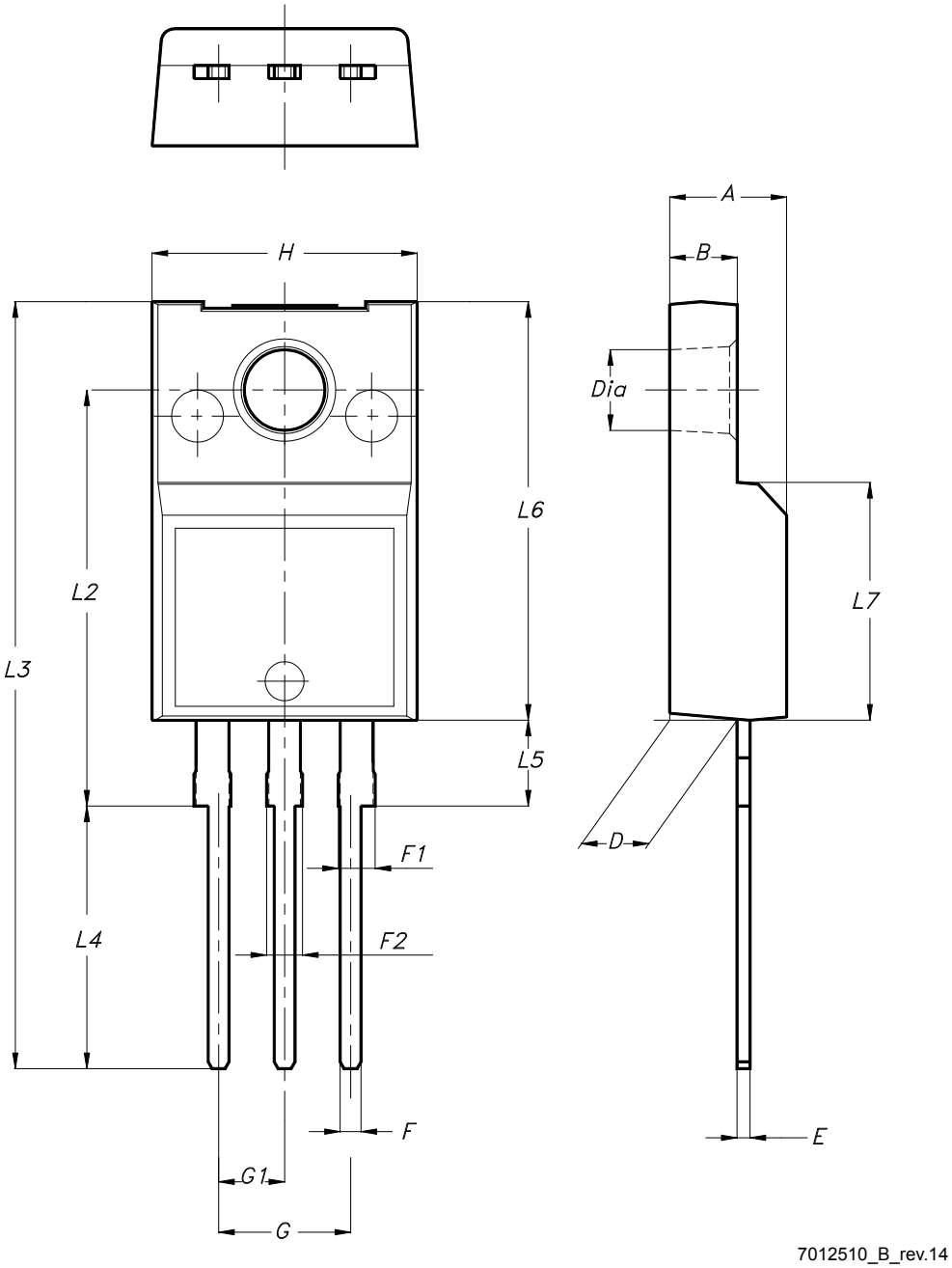

Table 12. **TO-220FP type B package mechanical data**

Dim.	mm		
	Min.	Typ.	Max.
A	4.40		4.60
B	2.50		2.70
D	2.50		2.75
E	0.45		0.70
F	0.75		1.00
F1	1.15		1.70
F2	1.15		1.70
G	4.95		5.20
G1	2.40		2.70
H	10.00		10.40
L2		16.00	
L3	28.60		30.60
L4	9.80		10.60
L5	2.90		3.60
L6	15.90		16.40
L7	9.00		9.30
Dia	3.00		3.20

4.6 TO-220 type A package information

Figure 28. TO-220 type A package outline

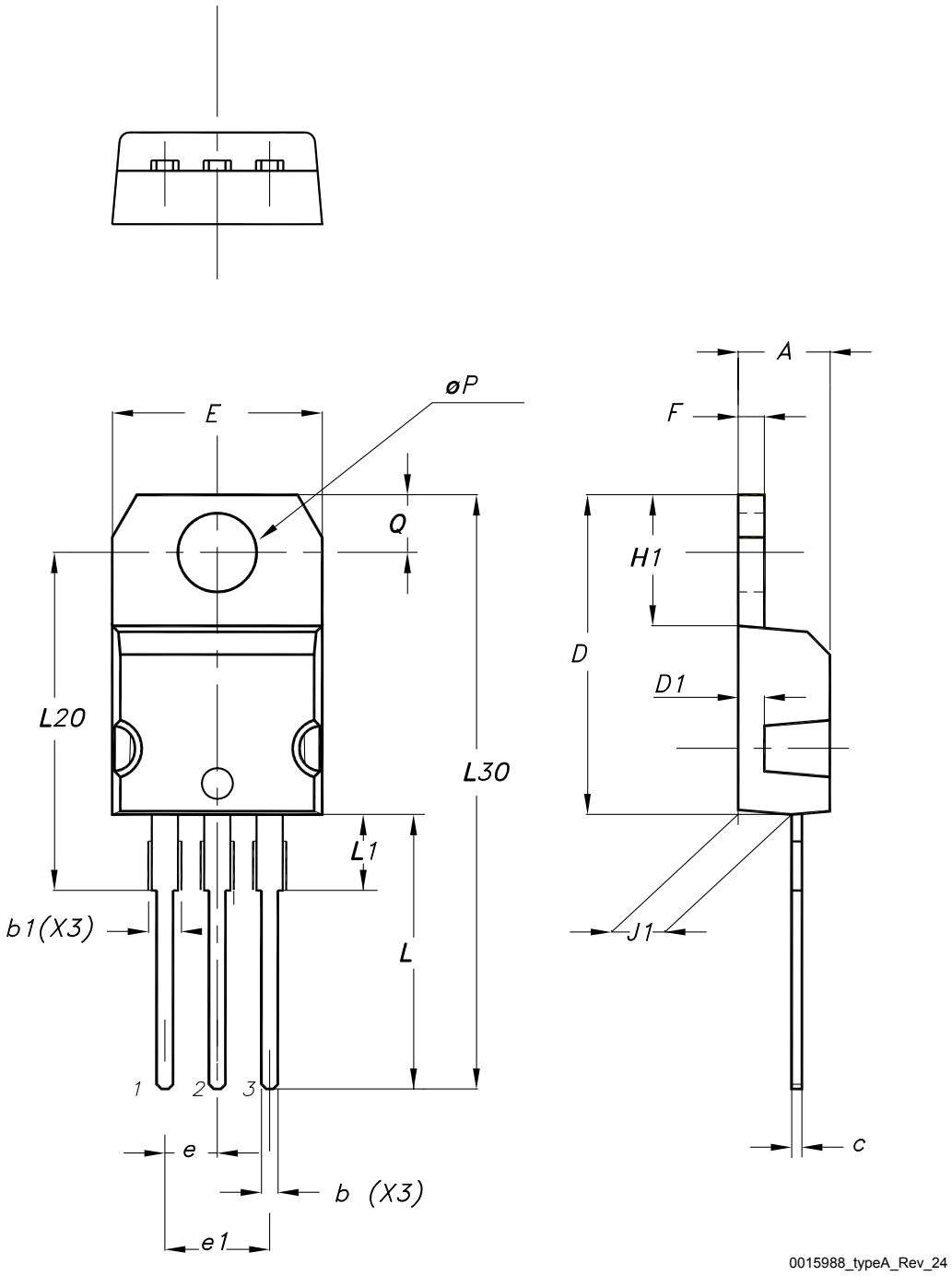

Table 13. TO-220 type A package mechanical data

Dim.	mm		
	Min.	Typ.	Max.
A	4.40		4.60
b	0.61		0.88
b1	1.14		1.55
c	0.48		0.70
D	15.25		15.75
D1		1.27	
E	10.00		10.40
e	2.40		2.70
e1	4.95		5.15
F	1.23		1.32
H1	6.20		6.60
J1	2.40		2.72
L	13.00		14.00
L1	3.50		3.93
L20		16.40	
L30		28.90	
øP	3.75		3.85
Q	2.65		2.95
Slug flatness		0.03	0.10

4.7 D²PAK packing information

Figure 29. D²PAK tape drawing (dimensions are in mm)

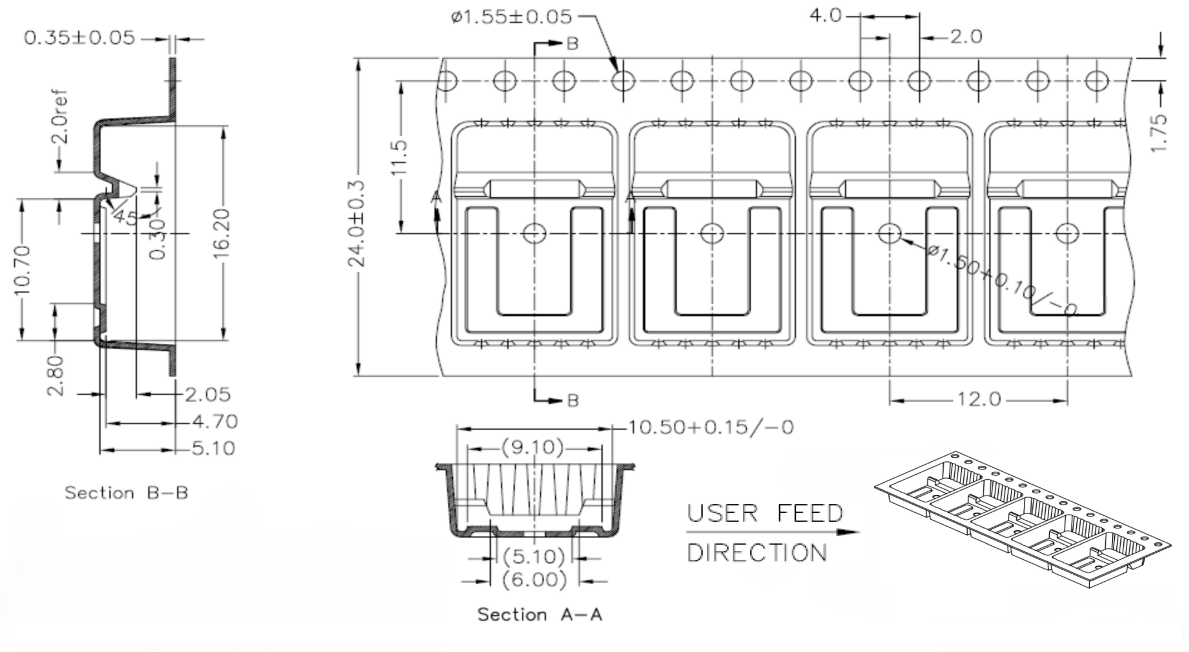

DM01095771_1

4.8 DPAK (TO-252) packing information

Figure 30. DPAK (TO-252) tape outline

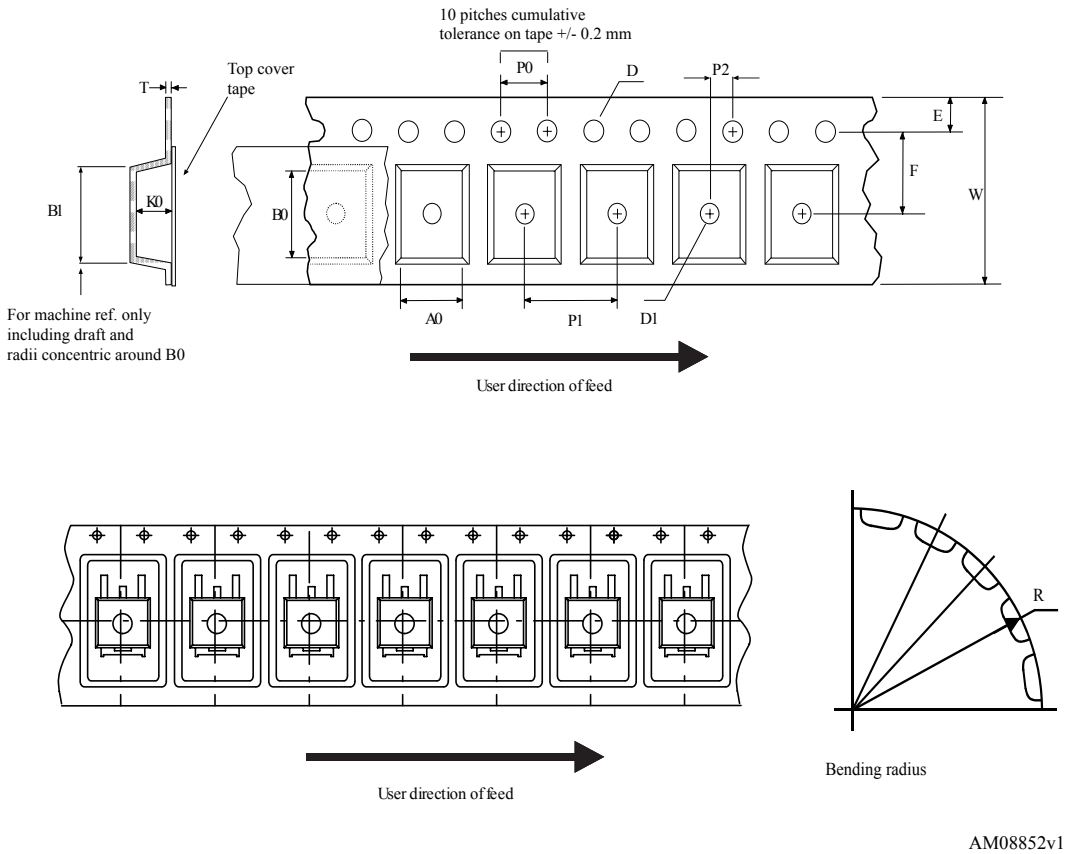

Figure 31. DPAK (TO-252) reel outline

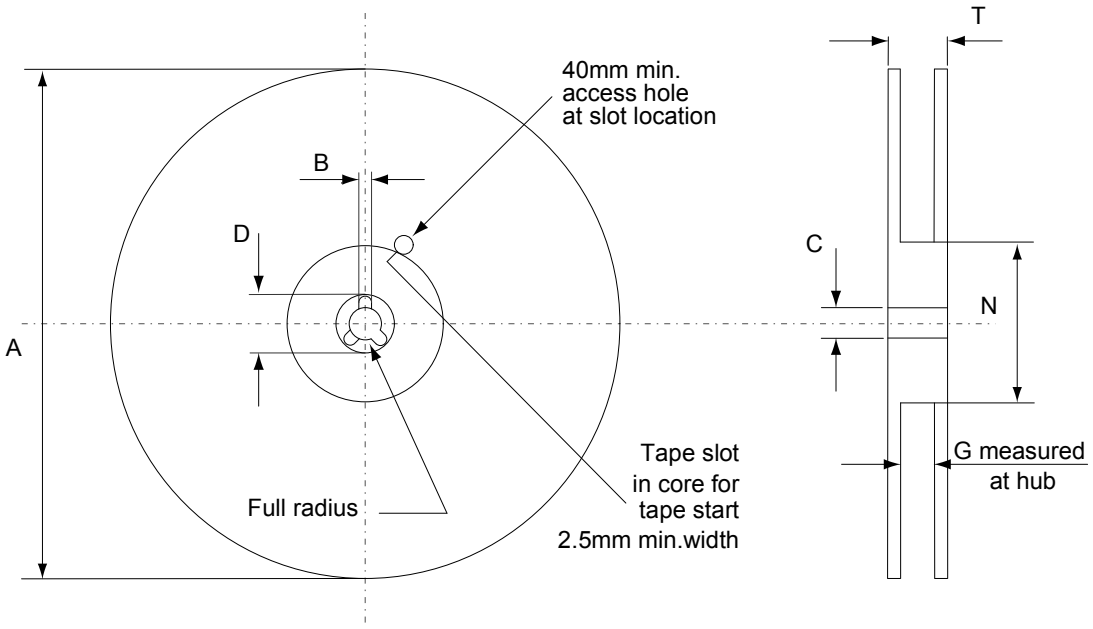

AM06038v1

Table 14. DPAK (TO-252) tape and reel mechanical data

Tape			Reel		
Dim.	mm		Dim.	mm	
	Min.	Max.		Min.	Max.
A0	6.8	7	A		330
B0	10.4	10.6	B	1.5	
B1		12.1	C	12.8	13.2
D	1.5	1.6	D	20.2	
D1	1.5		G	16.4	18.4
E	1.65	1.85	N	50	
F	7.4	7.6	T		22.4
K0	2.55	2.75			
P0	3.9	4.1	Base qty.		2500
P1	7.9	8.1	Bulk qty.		2500
P2	1.9	2.1			
R	40				
T	0.25	0.35			
W	15.7	16.3			

5 Ordering information

Table 15. **Order codes**

Order codes	Marking	Package	Packing
STGB10NC60KDT4	GB10NC60KD	D²PAK	Tape and reel
STGD10NC60KDT4	GD10NC60KD	DPAK	
STGF10NC60KD	GF10NC60KD	TO-220FP	Tube
STGP10NC60KD	GP10NC60KD	TO-220	

Revision history

Table 16. Document revision history

Date	Revision	Changes
14-Jun-2005	1	First release.
19-Jul-2005	2	Complete version.
27-Jan-2006	3	Inserted ecopack indication.
01-Mar-2006	4	The document has been reformatted.
08-Feb-2007	5	Modified value on *Table 6.: Switching on/off (inductive load).*
24-Nov-2009	6	Inserted DPAK package option.
06-Jun-2017	7	Modified part numbers on cover page. Updated *Section 4: "Package information"*. Minor text changes.
26-May-2023	8	Updated the entire Section 4: Package information. Minor text changes.
09-May-2025	9	Updated Section 4: Package information.

Contents

1 Electrical ratings 2

2 Electrical characteristics 3

2.1 Electrical characteristics (curves) 5

3 Test circuits 8

4 Package information 9

4.1 D²PAK (TO-263) type A package information 9

4.2 D²PAK (TO-263) type B package information 11

4.3 DPAK (TO-252) type A package information 13

4.4 DPAK (TO-252) type C3 package information 15

4.5 TO-220FP type B package information 18

4.6 TO-220 type A package information 20

4.7 D²PAK packing information 22

4.8 DPAK (TO-252) packing information 23

5 Ordering information 25

Revision history 26

IMPORTANT NOTICE – READ CAREFULLY

STMicroelectronics NV and its subsidiaries (“ST”) reserve the right to make changes, corrections, enhancements, modifications, and improvements to ST products and/or to this document at any time without notice. Purchasers should obtain the latest relevant information on ST products before placing orders. ST products are sold pursuant to ST’s terms and conditions of sale in place at the time of order acknowledgment.

Purchasers are solely responsible for the choice, selection, and use of ST products and ST assumes no liability for application assistance or the design of purchasers’ products.

No license, express or implied, to any intellectual property right is granted by ST herein.

Resale of ST products with provisions different from the information set forth herein shall void any warranty granted by ST for such product.

ST and the ST logo are trademarks of ST. For additional information about ST trademarks, refer to www.st.com/trademarks. All other product or service names are the property of their respective owners.

Information in this document supersedes and replaces information previously supplied in any prior versions of this document.

© 2025 STMicroelectronics – All rights reserved