# STGB19NC60KDT4, STGF19NC60KD, STGP19NC60KD

Datasheet

## 20 A, 600 V short-circuit rugged IGBT

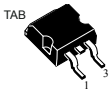


D²PAK

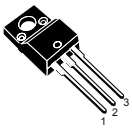


TO-220FP

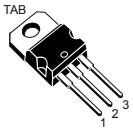


TO-220

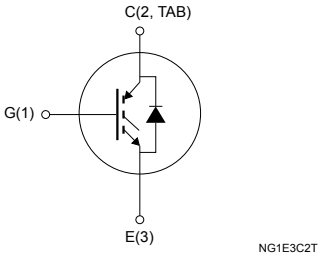


## Features

- Low on voltage drop ($V_{CE(sat)}$)
- Low $C_{res}$ / $C_{ies}$ ratio (no cross-conduction susceptibility)
- Very soft ultra-fast recovery antiparallel diode
- Short-circuit withstand time 10 µs
- IGBT co-packaged with ultra-fast freewheeling diode

## Applications

- High frequency inverters
- Motor drives

## Description

These devices are very fast IGBTs developed using advanced PowerMESH technology. This process guarantees an excellent trade-off between switching performance and low on-state behavior.

| Product status links |
| --- |
| STGB19NC60KDT4 |
| STGF19NC60KD |
| STGP19NC60KD |

# 1 Electrical ratings

**Table 1. Absolute maximum ratings**

| Symbol | Parameter | Value | | Unit |
|---|---|---|---|---|
| | | D²PAK, TO-220 | TO-220FP | |
| $V_{CES}$ | Collector-emitter voltage ($V_{GE}$ = 0 V) | 600 | | V |
| $I_C$[1] | Continuous collector current at $T_C$ = 25 °C | 35 | 16 | A |
| | Continuous collector current at $T_C$ = 100 °C | 20 | 10 | |
| $I_{CL}$[2] | Turn-off latching current | 75 | | A |
| $I_{CP}$[3] | Pulsed collector current | 75 | | A |
| $V_{GE}$ | Gate-emitter voltage | ±20 | | V |
| $I_F$ | Diode RMS forward current at $T_C$ = 25 °C | 20 | | A |
| $I_{FSM}$ | Surge non repetitive forward current $t_p$ = 10 ms sinusoidal | 50 | | A |
| $V_{ISO}$ | Insulation withstand voltage (RMS) from all three leads to external heat sink (t = 1 s, $T_C$ = 25 °C) | | 2.5 | kV |
| $t_{scw}$ | Short-circuit withstand time $V_{CE}$ = 300 V, $T_J$ = 125 °C, $R_G$ = 10 Ω, $V_{GE}$ = 12 V | 10 | | µs |
| $P_{TOT}$ | Total power dissipation at $T_C$ = 25 °C | 125 | 32 | W |
| $T_{stg}$ | Storage temperature range | -55 to 150 | | °C |
| $T_J$ | Operating junction temperature range | | | °C |

1. *Calculated according to the iterative formula:* $I_C(T_C) = \frac{T_{J(\max)} - T_C}{R_{thJC} \times V_{CE(sat)(\max)}\left(T_{J(\max)}, I_C(T_C)\right)}$
2. *$V_{clamp}$ = 80% $V_{CES}$, $T_J$ =150 °C, $R_G$ = 10 Ω, $V_{GE}$ = 15 V.*
3. *Pulse width limited by maximum junction temperature and turn-off within RBSOA.*

**Table 2. Thermal data**

| Symbol | Parameter | Value | | Unit |
|---|---|---|---|---|
| | | D²PAK, TO-220 | TO-220FP | |
| $R_{thJC}$ | Thermal resistance, junction-to-case IGBT | 1.0 | 3.9 | °C/W |
| | Thermal resistance, junction-to-case diode | 3.0 | 5.6 | |
| $R_{thJA}$ | Thermal resistance, junction-to-ambient | 62.5 | | °C/W |

# 2 Electrical characteristics

$T_C$ = 25 °C unless otherwise specified

**Table 3. Static characteristics**

| Symbol | Parameter | Test conditions | Min. | Typ. | Max. | Unit |
|---|---|---|---|---|---|---|
| $V_{(BR)CES}$ | Collector-emitter breakdown voltage | $V_{GE}$ = 0 V, $I_C$ = 1 mA | 600 | | | V |
| $V_{CE(sat)}$ | Collector-emitter saturation voltage | $V_{GE}$ = 15 V, $I_C$ = 12 A | | 2.0 | 2.75 | V |
| | | $V_{GE}$ = 15 V, $I_C$ = 12 A, $T_J$ = 125 °C | | 1.65 | | |
| $V_{GE(th)}$ | Gate threshold voltage | $V_{CE}$ = $V_{GE}$, $I_C$ = 250 µA | 4.5 | | 6.5 | V |
| $I_{CES}$ | Collector cut-off current | $V_{GE}$ = 0 V, $V_{CE}$ = 600 V | | | 0.15 | mA |
| | | $V_{GE}$ = 0 V, $V_{CE}$ = 600 V, $T_J$ = 125 °C (1) | | | 1 | |
| $I_{GES}$ | Gate-emitter leakage current | $V_{CE}$ = 0 V, $V_{GE}$ = ±20 V | | | ±100 | nA |

1. *Specified by design, not tested in production.*

**Table 4. Dynamic characteristics**

| Symbol | Parameter | Test conditions | Min. | Typ. | Max. | Unit |
|---|---|---|---|---|---|---|
| $C_{ies}$ | Input capacitance | $V_{CE}$ = 25 V, f = 1 MHz, $V_{GE}$ = 0 V | - | 1170 | - | pF |
| $C_{oes}$ | Output capacitance | | - | 127 | - | pF |
| $C_{res}$ | Reverse transfer capacitance | | - | 28 | - | pF |
| $Q_g$ | Total gate charge | $V_{CC}$ = 480 V, $I_C$ = 12 A, $V_{GE}$ = 0 to 15 V (see Figure 18. Gate charge test circuit) | - | 55 | - | nC |
| $Q_{ge}$ | Gate-emitter charge | | - | 11 | - | nC |
| $Q_{gc}$ | Gate-collector charge | | - | 26 | - | nC |

**Table 5. Switching on/off (inductive load)**

| Symbol | Parameter | Test conditions | Min. | Typ. | Max. | Unit |
|---|---|---|---|---|---|---|
| $t_{d(on)}$ | Turn-on delay time | $V_{CC}$ = 480 V, $I_C$ = 12 A, $R_G$ = 10 Ω, $V_{GE}$ = 15 V (see Figure 16. Test circuit for inductive load switching and Figure 19. Switching waveform) | - | 30 | - | ns |
| $t_r$ | Current rise time | | - | 8 | - | ns |
| $(di/dt)_{on}$ | Turn-on current slope | | - | 1450 | - | A/µs |
| $t_{d(on)}$ | Turn-on delay time | $V_{CC}$ = 480 V, $I_C$ = 12 A, $R_G$ = 10 Ω, $V_{GE}$ = 15 V, $T_J$ = 125 °C (see Figure 16. Test circuit for inductive load switching and Figure 19. Switching waveform) | - | 30 | - | ns |
| $t_r$ | Current rise time | | - | 8 | - | ns |
| $(di/dt)_{on}$ | Turn-on current slope | | - | 1380 | - | A/µs |
| $t_r(V_{off})$ | Off voltage rise time | $V_{CC}$ = 480 V, $I_C$ = 12 A, $R_G$ = 10 Ω, $V_{GE}$ = 15 V (see Figure 16. Test circuit for inductive load switching and Figure 19. Switching waveform) | - | 35 | - | ns |
| $t_{d(off)}$ | Turn-off delay time | | - | 105 | - | ns |
| $t_f$ | Current fall time | | - | 85 | - | ns |
| $t_r(V_{off})$ | Off voltage rise time | $V_{CC}$ = 480 V, $I_C$ = 12 A, $R_G$ = 10 Ω, $V_{GE}$ = 15 V, $T_J$ = 125 °C (see Figure 16. Test circuit for inductive load switching and Figure 19. Switching waveform) | - | 65 | - | ns |
| $t_{d(off)}$ | Turn-off delay time | | - | 145 | - | ns |
| $t_f$ | Current fall time | | - | 125 | - | ns |

**Table 6. Switching energy (inductive load)**

| Symbol | Parameter | Test conditions | Min. | Typ. | Max. | Unit |
|---|---|---|---|---|---|---|
| $E_{on}$ (1) | Turn-on switching energy | $V_{CE}$ = 480 V, $I_C$ = 12 A, $R_G$ = 10 Ω, $V_{GE}$ = 15 V (see Figure 16. Test circuit for inductive load switching | - | 165 | - | µJ |
| $E_{off}$ (2) | Turn-off switching energy | | - | 255 | - | µJ |
| $E_{ts}$ | Total switching energy | | - | 420 | - | µJ |
| $E_{on}$ (1) | Turn-on switching energy | $V_{CE}$ = 480 V, $I_C$ = 12 A, $R_G$ = 10 Ω, $V_{GE}$ = 15 V, $T_J$ = 125 °C (see Figure 16. Test circuit for inductive load switching | - | 250 | - | µJ |
| $E_{off}$ (2) | Turn-off switching energy | | - | 445 | - | µJ |
| $E_{ts}$ | Total switching energy | | - | 695 | - | µJ |

1. *Including the reverse recovery of the diode.*
2. *Including the tail of the collector current.*

**Table 7. Diode switching characteristics (inductive load)**

| Symbol | Parameter | Test conditions | Min. | Typ. | Max. | Unit |
|---|---|---|---|---|---|---|
| $V_F$ | Forward on-voltage | $I_F$ = 12 A | - | 1.9 | - | V |
| | | $I_F$ = 12 A, $T_J$ = 125 °C | - | 1.6 | - | |
| $t_{rr}$ | Reverse recovery time | $I_F$ = 12 A, $V_R$ = 40 V, di/dt = 100 A/µs (see Figure 17. Diode reverse recovery waveform) | - | 31 | - | ns |
| $Q_{rr}$ | Reverse recovery charge | | - | 30 | - | nC |
| $I_{rrm}$ | Reverse recovery current | | - | 2.0 | - | A |
| $t_{rr}$ | Reverse recovery time | $I_F$ = 12 A, $V_R$ = 40 V, di/dt = 100 A/µs, $T_J$ = 125 °C (see Figure 17. Diode reverse recovery waveform) | - | 50 | - | ns |
| Qrr | Reverse recovery charge | | - | 70 | - | nC |
| $I_{rr}$ | Reverse recovery current | | - | 4 | - | A |

## 2.1 Electrical characteristics (curves)

**Figure 1. Typical output characteristics**

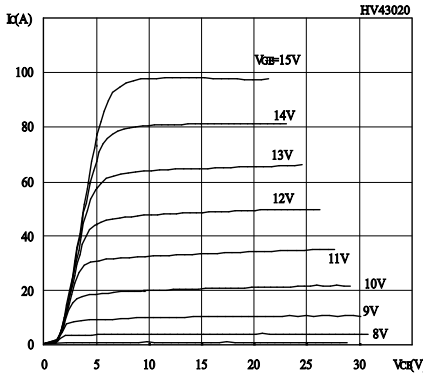


**Figure 2. Typical transfer characteristics**

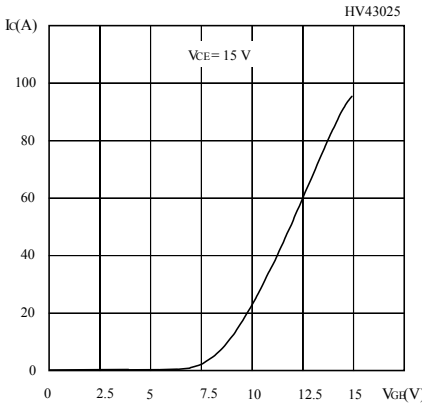


**Figure 3. Typical collector-emitter on voltage vs temperature**

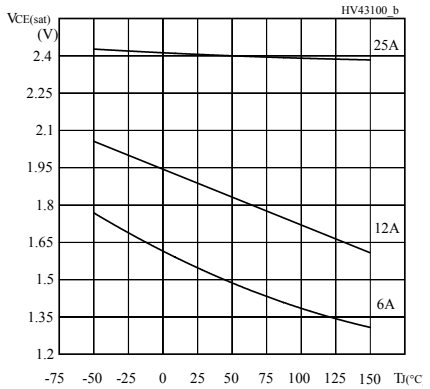


**Figure 4. Typical gate charge characteristics**

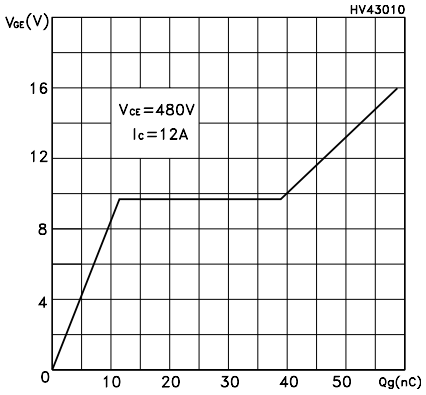


**Figure 5. Typical capacitance characteristics**

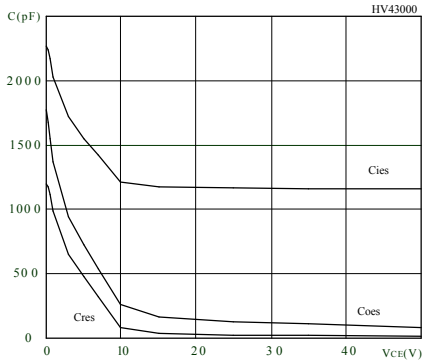


**Figure 6. Normalized gate threshold vs temperature**

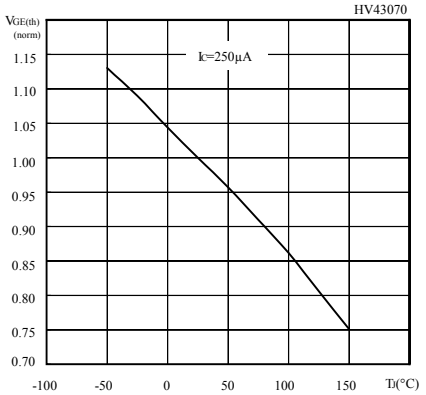

**Figure 7. Typical collector-emitter on voltage vs collector current**

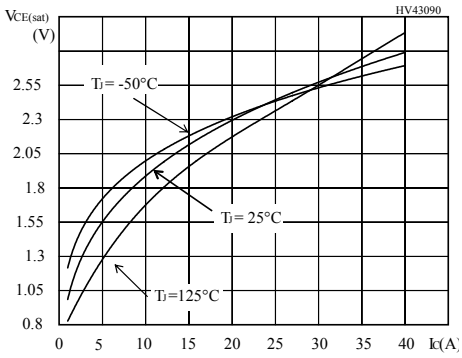


**Figure 8. Normalized breakdown voltage vs temperature**

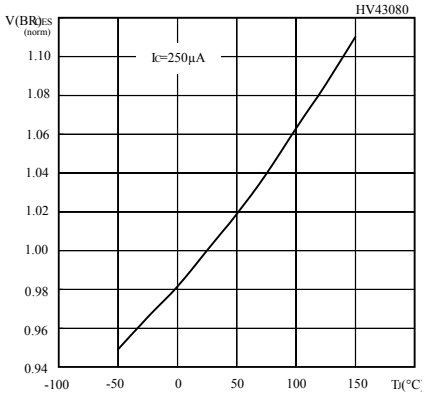


**Figure 9. Typical switching energy vs temperature**

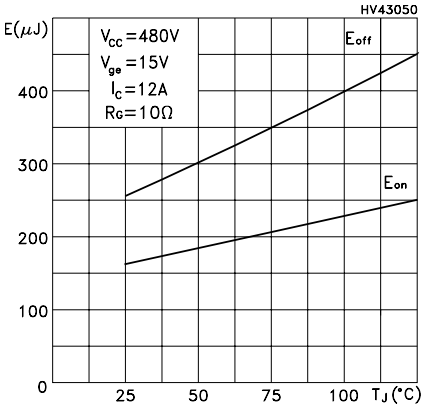


**Figure 10. Typical switching energy vs gate resistance**

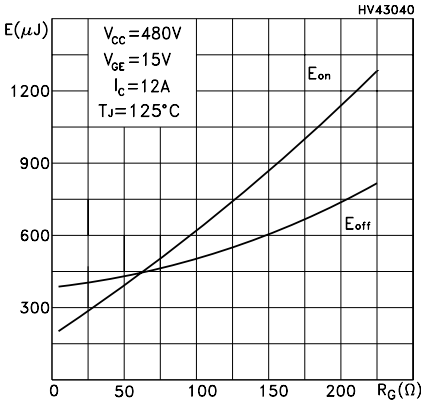


**Figure 11. Typical switching energy vs collector current**

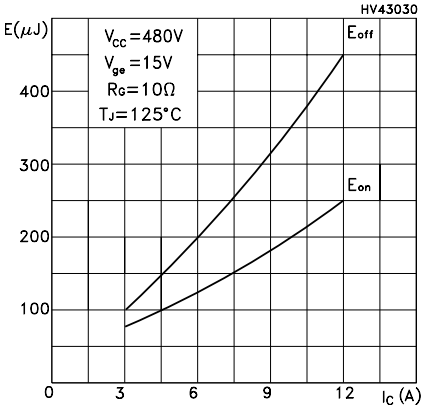


**Figure 12. Turn-off SOA**

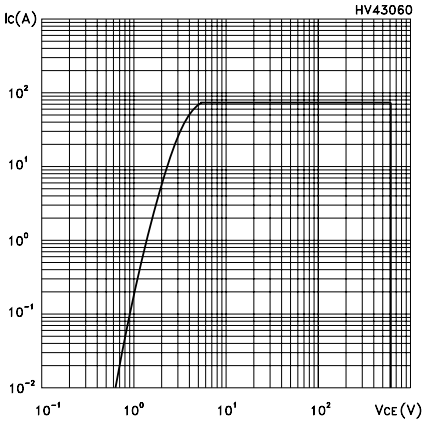

**Figure 13. Emitter-collector diode characteristics**

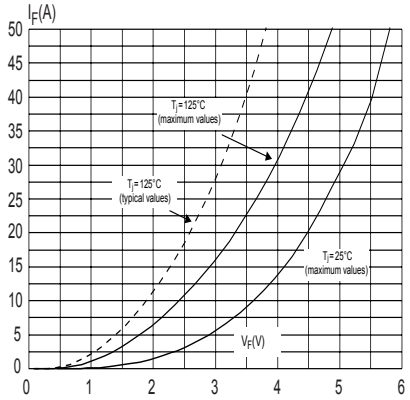


**Figure 14. Normalized transient thermal impedance for D²PAK and TO-220**

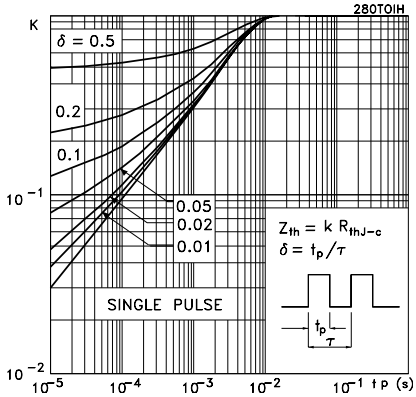


**Figure 15. Normalized transient thermal impedance for TO-220FP**

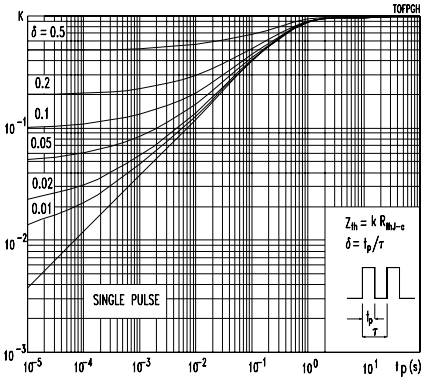

# 3 Test circuits

**Figure 16. Test circuit for inductive load switching**

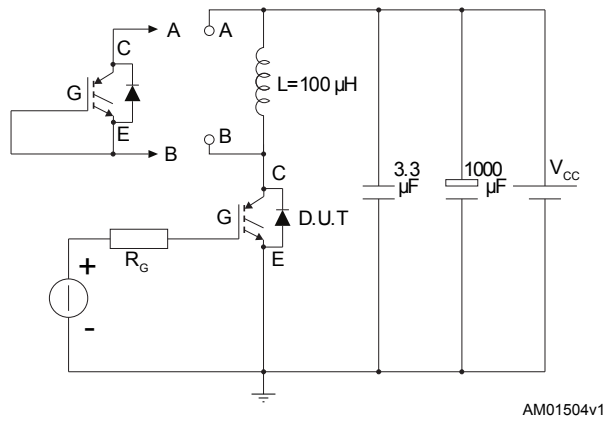


**Figure 17. Diode reverse recovery waveform**

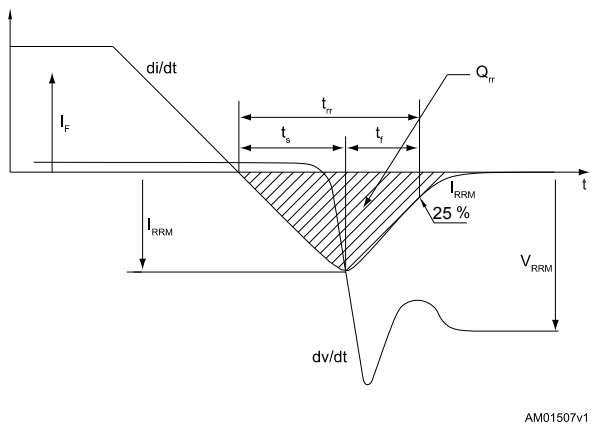


**Figure 18. Gate charge test circuit**

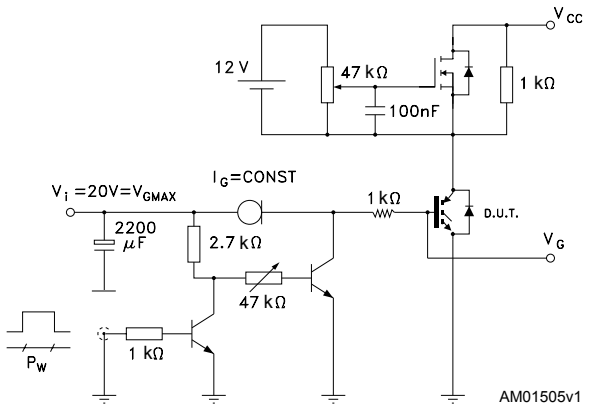


**Figure 19. Switching waveform**

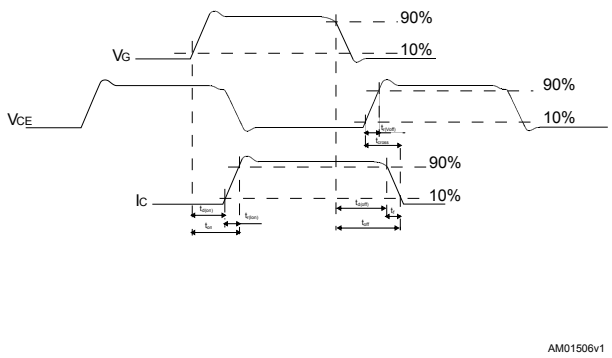

# 4 Package information

To meet environmental requirements, ST offers these devices in different grades of ECOPACK packages, depending on their level of environmental compliance. ECOPACK specifications, grade definitions, and product status are available at: www.st.com. ECOPACK is an ST trademark.

## 4.1 D²PAK (TO-263) type A2 package information

**Figure 20. D²PAK (TO-263) type A2 package outline**

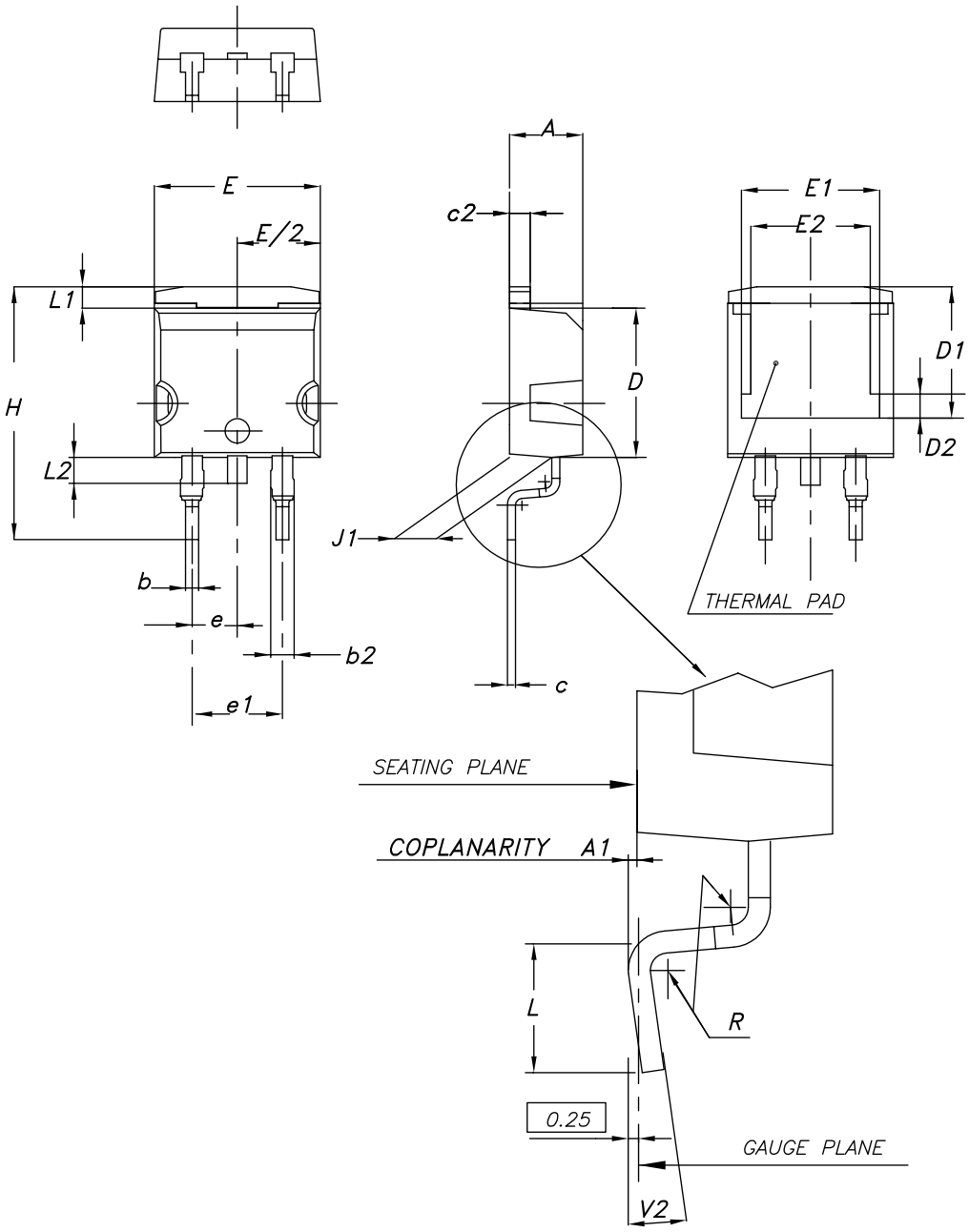


0079457_A2_27

Table 8. D²PAK (TO-263) type A2 package mechanical data

| Dim. | mm | | |
|---|---|---|---|
| | Min. | Typ. | Max. |
| A | 4.40 | | 4.60 |
| A1 | 0.03 | | 0.23 |
| b | 0.70 | | 0.93 |
| b2 | 1.14 | | 1.70 |
| c | 0.45 | | 0.60 |
| c2 | 1.23 | | 1.36 |
| D | 8.95 | | 9.35 |
| D1 | 7.50 | 7.75 | 8.00 |
| D2 | 1.10 | 1.30 | 1.50 |
| E | 10.00 | | 10.40 |
| E1 | 8.70 | 8.90 | 9.10 |
| E2 | 7.30 | 7.50 | 7.70 |
| e | | 2.54 | |
| e1 | 4.88 | | 5.28 |
| H | 15.00 | | 15.85 |
| J1 | 2.49 | | 2.69 |
| L | 2.29 | | 2.79 |
| L1 | 1.27 | | 1.40 |
| L2 | 1.30 | | 1.75 |
| R | | 0.40 | |
| V2 | 0° | | 8° |

## 4.2 D²PAK (TO-263) type B package information

Figure 21. D²PAK (TO-263) type B package outline

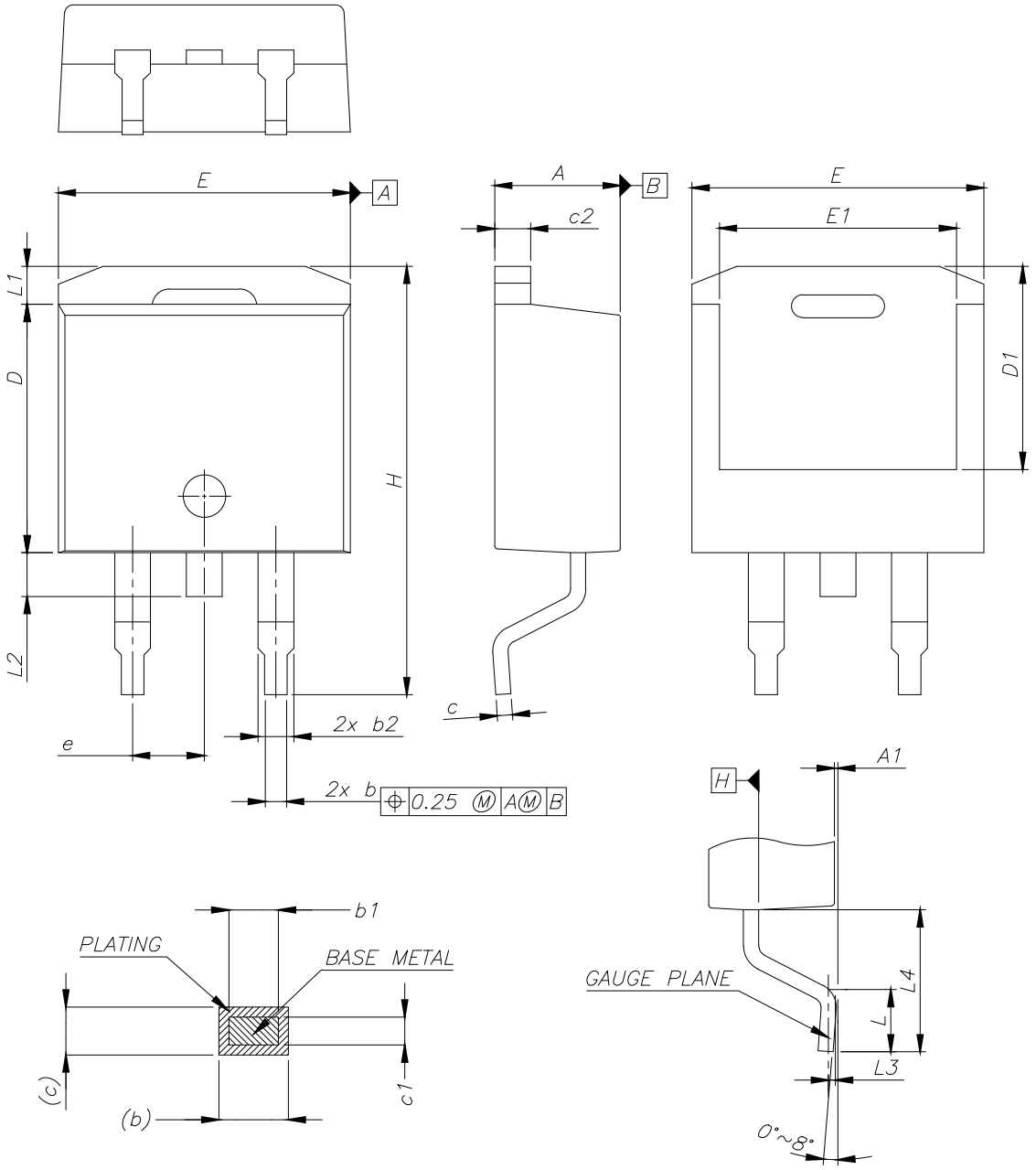


0079457_27_B

**Table 9. D²PAK (TO-263) type B mechanical data**

| Dim. | mm | | |
|---|---|---|---|
| | Min. | Typ. | Max. |
| A | 4.36 | | 4.56 |
| A1 | 0.00 | | 0.25 |
| b | 0.70 | | 0.90 |
| b1 | 0.51 | | 0.89 |
| b2 | 1.17 | | 1.37 |
| c | 0.38 | | 0.694 |
| c1 | 0.38 | | 0.534 |
| c2 | 1.19 | | 1.34 |
| D | 8.60 | | 9.00 |
| D1 | 6.90 | | 7.50 |
| E | 10.15 | | 10.55 |
| E1 | 8.10 | | 8.70 |
| e | 2.54 BSC | | |
| H | 15.00 | | 15.60 |
| L | 1.90 | | 2.50 |
| L1 | | | 1.65 |
| L2 | | | 1.78 |
| L3 | | 0.25 | |
| L4 | 4.78 | | 5.28 |

**Figure 22. D²PAK (TO-263) recommended footprint (dimensions are in mm)**

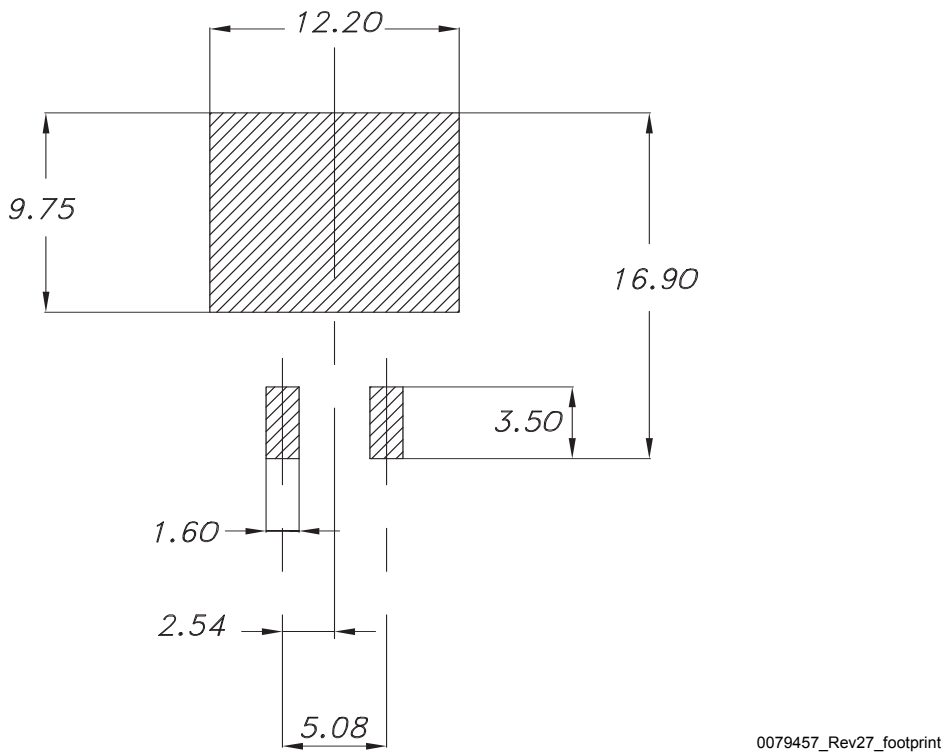

## 4.3 TO-220FP type B package information

Figure 23. TO-220FP type B package outline

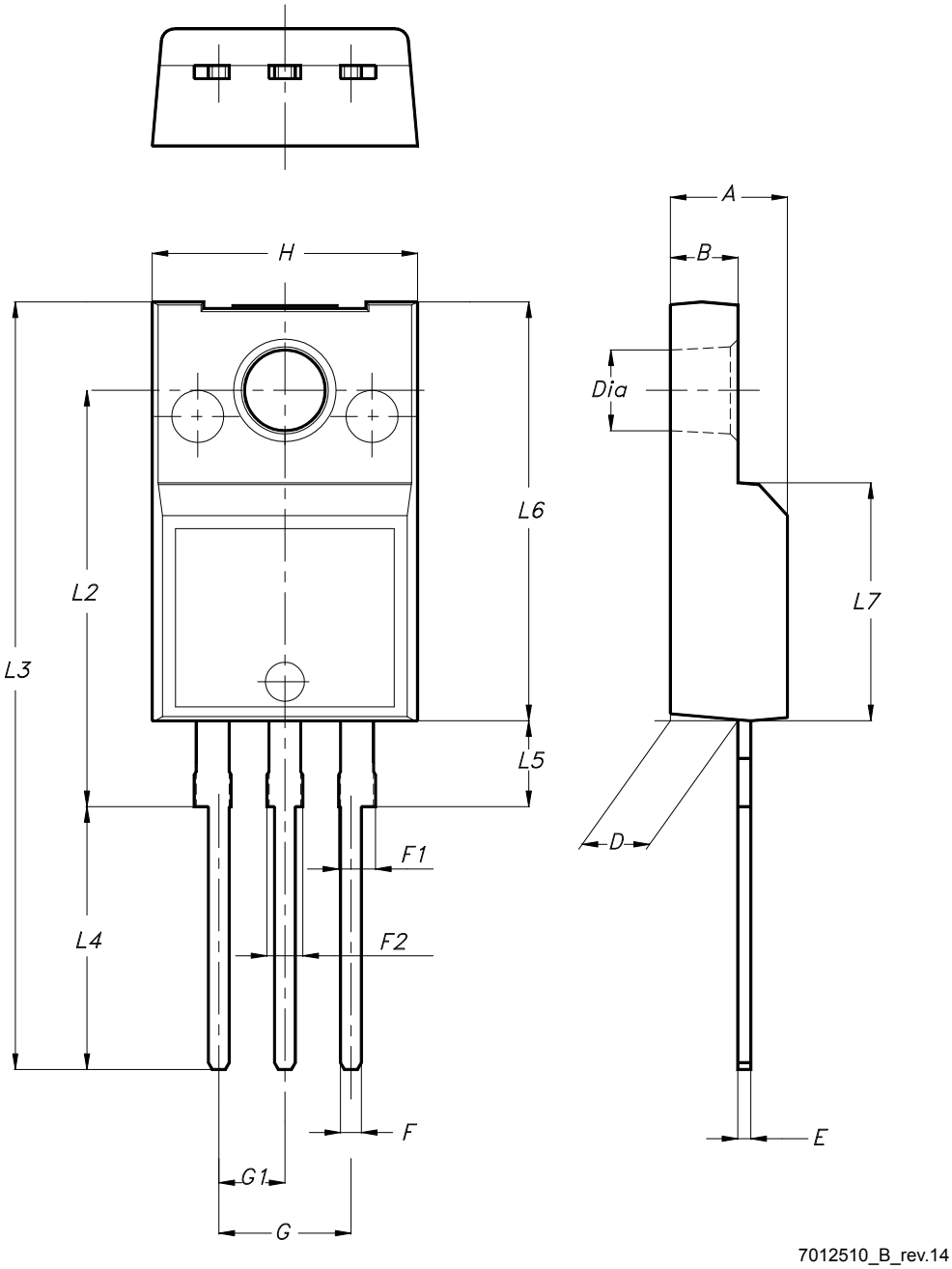

Table 10. **TO-220FP type B package mechanical data**

| Dim. | mm | | |
|---|---|---|---|
| | Min. | Typ. | Max. |
| A | 4.40 | | 4.60 |
| B | 2.50 | | 2.70 |
| D | 2.50 | | 2.75 |
| E | 0.45 | | 0.70 |
| F | 0.75 | | 1.00 |
| F1 | 1.15 | | 1.70 |
| F2 | 1.15 | | 1.70 |
| G | 4.95 | | 5.20 |
| G1 | 2.40 | | 2.70 |
| H | 10.00 | | 10.40 |
| L2 | | 16.00 | |
| L3 | 28.60 | | 30.60 |
| L4 | 9.80 | | 10.60 |
| L5 | 2.90 | | 3.60 |
| L6 | 15.90 | | 16.40 |
| L7 | 9.00 | | 9.30 |
| Dia | 3.00 | | 3.20 |

## 4.4 TO-220 type A package information

Figure 24. TO-220 type A package outline

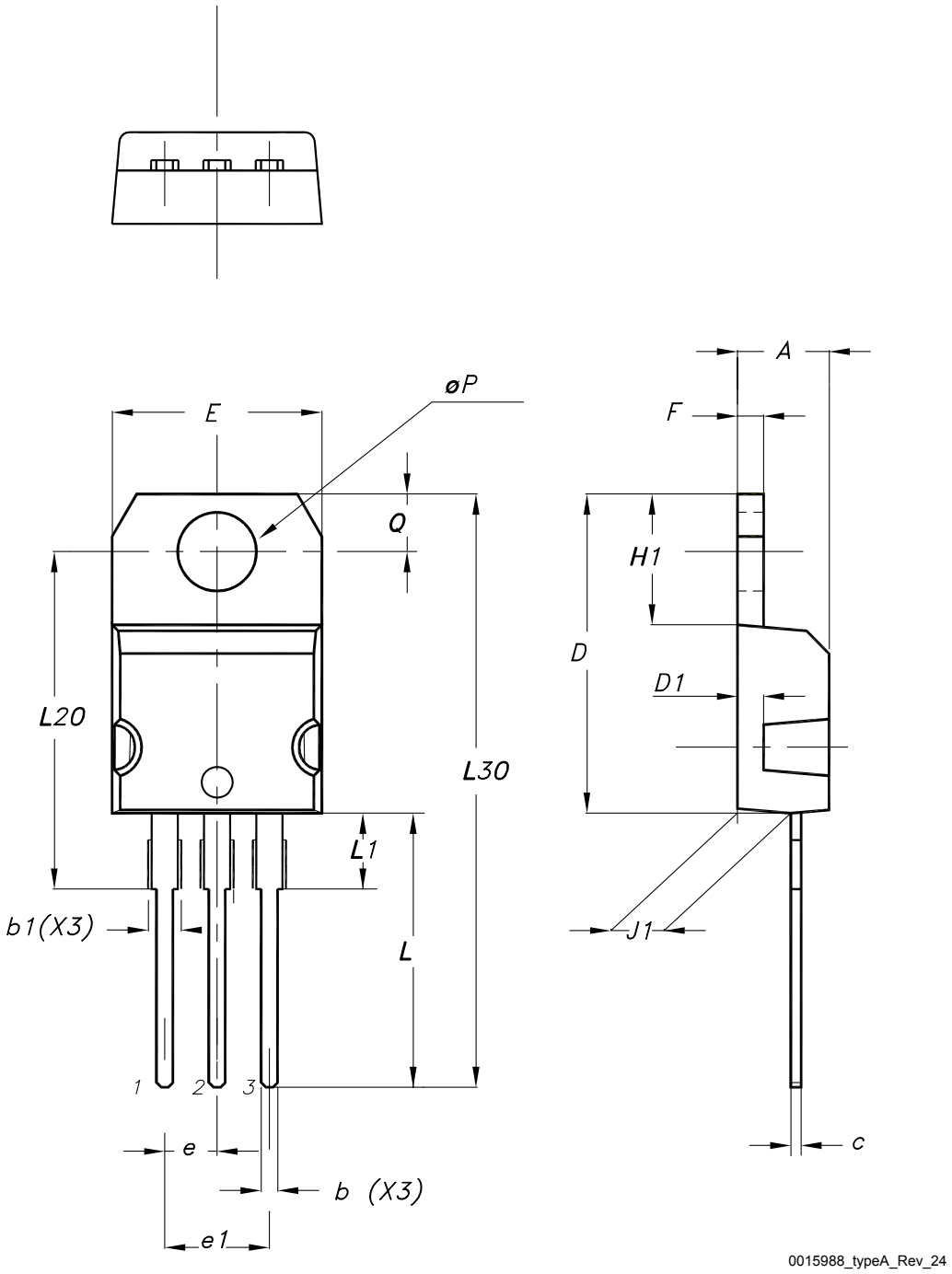

**Table 11. TO-220 type A package mechanical data**

| Dim. | mm | | |
|---|---|---|---|
| | Min. | Typ. | Max. |
| A | 4.40 | | 4.60 |
| b | 0.61 | | 0.88 |
| b1 | 1.14 | | 1.55 |
| c | 0.48 | | 0.70 |
| D | 15.25 | | 15.75 |
| D1 | | 1.27 | |
| E | 10.00 | | 10.40 |
| e | 2.40 | | 2.70 |
| e1 | 4.95 | | 5.15 |
| F | 1.23 | | 1.32 |
| H1 | 6.20 | | 6.60 |
| J1 | 2.40 | | 2.72 |
| L | 13.00 | | 14.00 |
| L1 | 3.50 | | 3.93 |
| L20 | | 16.40 | |
| L30 | | 28.90 | |
| øP | 3.75 | | 3.85 |
| Q | 2.65 | | 2.95 |
| Slug flatness | | 0.03 | 0.10 |

## 4.5 D²PAK packing information

Figure 25. D²PAK tape drawing (dimensions are in mm)

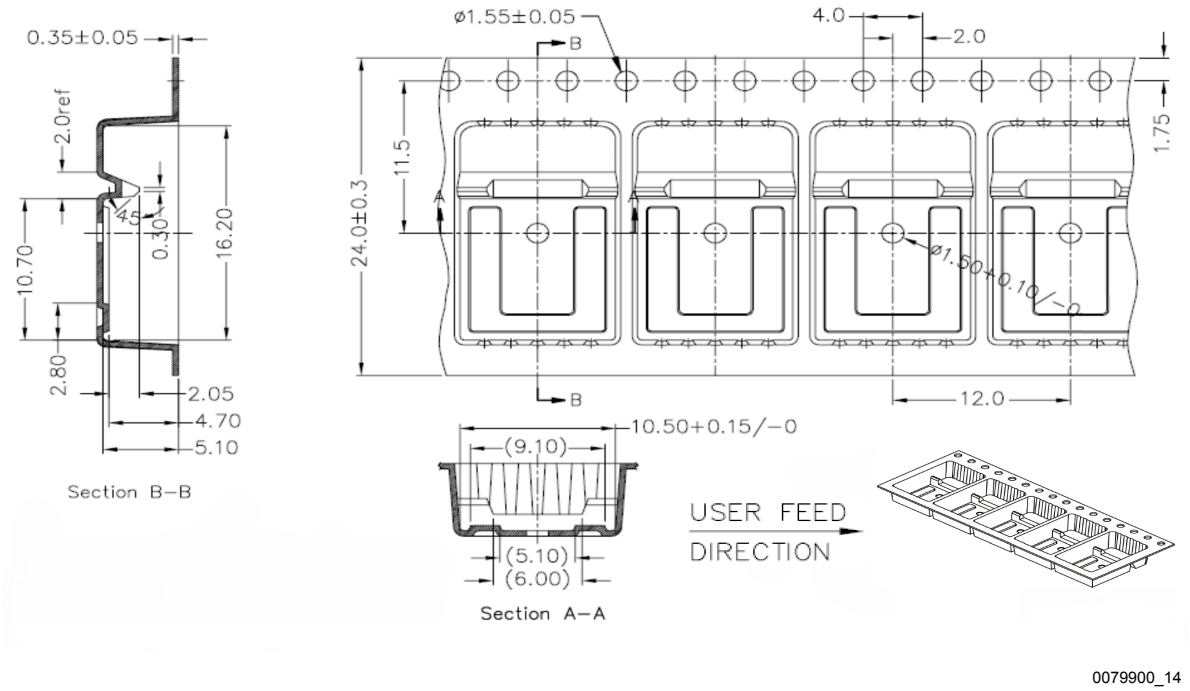

## Revision history

**Table 12. Document revision history**

| Date | Revision | Changes |
|---|---|---|
| 08-May-2008 | 1 | Initial release |
| 28-May-2008 | 2 | – Value on Table 3: Thermal resistance has been changed.<br>– Inserted Figure 16: Thermal impedance for TO-220, D²PAK and Figure 17: Thermal impedance for TO-220FP |
| 31-Jul-2012 | 3 | Added: *Figure 18* and *Figure 19* on page 8. |
| 17-Jul-2017 | 4 | Modified internal schematic diagram on cover page.<br>Modified *Table 2: "Absolute maximum ratings"*, *Table 3: "Thermal data"*, and *Table 4: "Static characteristics"*.<br>Modified *Figure 3: "Transfer characteristics"*, *Figure 4: "Collectoremitter on voltage vs temperature"* and *Figure 8: "Collector-emitter on voltage vs collector current"*.<br>Updated *Section 4: "Package information"*.<br>Minor text changes. |
| 13-Jun-2025 | 5 | Updated Section 4: Package information.<br>Minor text changes. |

**IMPORTANT NOTICE – READ CAREFULLY**

STMicroelectronics NV and its subsidiaries (“ST”) reserve the right to make changes, corrections, enhancements, modifications, and improvements to ST products and/or to this document at any time without notice. Purchasers should obtain the latest relevant information on ST products before placing orders. ST products are sold pursuant to ST’s terms and conditions of sale in place at the time of order acknowledgment.

Purchasers are solely responsible for the choice, selection, and use of ST products and ST assumes no liability for application assistance or the design of purchasers’ products.

No license, express or implied, to any intellectual property right is granted by ST herein.

Resale of ST products with provisions different from the information set forth herein shall void any warranty granted by ST for such product.

ST and the ST logo are trademarks of ST. For additional information about ST trademarks, refer to www.st.com/trademarks. All other product or service names are the property of their respective owners.

Information in this document supersedes and replaces information previously supplied in any prior versions of this document.

© 2025 STMicroelectronics – All rights reserved