STF38N65M5, STFW38N65M5

Datasheet

N-channel 650 V, 73 mΩ typ., 30 A MDmesh M5 Power MOSFETs in a TO-220FP and TO-3PF packages

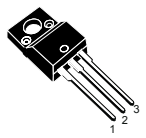

TO-220FP

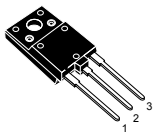

TO-3PF

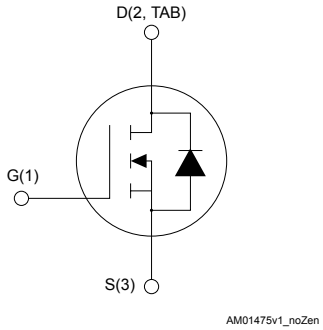

Features

Order code	V_{DS}	$R_{DS(on)}$ max.	I_D
STF38N65M5	650 V	95 mΩ	30 A
STFW38N65M5			

- Higher V_{DSS} rating
- Higher dv/dt capability
- Excellent switching performance
- Extremely low $R_{DS(on)}$
- 100% avalanche tested

Applications

- Switching applications

Description

These devices are N-channel Power MOSFETs based on the MDmesh M5 innovative vertical process technology combined with the well-known PowerMESH horizontal layout. The resulting products offer extremely low on-resistance, making them particularly suitable for applications requiring high power and superior efficiency.

Product status links
STF38N65M5
STFW38N65M5

Product summary	
Order code	**STF38N65M5**
Marking	38N65M5
Package	TO-220FP
Packing	Tube
Order code	**STFW38N65M5**
Marking	38N65M5
Package	TO-3PF
Packing	Tube

1 Electrical ratings

Table 1. Absolute maximum ratings

Symbol	Parameter	Value		Unit
		TO-220FP	TO-3PF	
V_{DS}	Drain-source voltage	650		V
V_{GS}	Gate-source voltage	±25		V
I_D	Drain current (continuous) at T_C = 25 °C	30		A
	Drain current (continuous) at T_C = 100 °C	19		
I_{DM}(1)	Drain current (pulsed)	120		A
P_{TOT}	Total power dissipation at T_C = 25 °C	35	57	W
dv/dt(2)	Peak diode recovery voltage slope	15		V/ns
dv/dt(3)	MOSFET dv/dt ruggedness	50		V/ns
V_{ISO}	Insulation withstand voltage (RMS) from all three leads to external heat sink (t = 1 s, T_C = 25 °C)	2.5	3.5	kV
T_{stg}	Storage temperature range	-55 to 150		°C
T_J	Maximum operating junction temperature	150		°C

1. *Pulse width is limited by safe operating area.*
2. *I_{SD} ≤ 30 A, di/dt ≤ 400 A/µs, V_{DS} (peak) < $V_{(BR)DSS}$, V_{DD} = 400 V.*
3. *V_{DS} ≤ 520 V.*

Table 2. Thermal data

Symbol	Parameter	Value		Unit
		TO-220FP	TO-3PF	
R_{thJC}	Thermal resistance, junction-to-case	3.6	2.2	°C/W
R_{thJA}	Thermal resistance, junction-to-ambient	62.5	50	°C/W

Table 3. Avalanche characteristics

Symbol	Parameter	Value	Unit
I_{AR}	Avalanche current, repetitive or not-repetitive (pulse width limited by T_J max.)	8	A
E_{AS}	Single pulse avalanche energy (starting T_J = 25 °C, I_D = I_{AR}, V_{DD} = 50 V)	660	mJ

2 Electrical characteristics

T_C = 25 °C unless otherwise specified.

Table 4. On/off states

Symbol	Parameter	Test conditions	Min.	Typ.	Max.	Unit
$V_{(BR)DSS}$	Drain-source breakdown voltage	V_{GS} = 0 V, I_D = 1 mA	650	-	-	V
I_{DSS}	Zero gate voltage drain current	V_{GS} = 0 V, V_{DS} = 650 V	-	-	1	µA
		V_{GS} = 0 V, V_{DS} = 650 V, T_C = 125 °C(1)	-	-	100	
I_{GSS}	Gate-body leakage current	V_{DS} = 0 V, V_{GS} = ±25 V	-	-	±100	nA
$V_{GS(th)}$	Gate threshold voltage	V_{DS} = V_{GS}, I_D = 250 µA	3	4	5	V
$R_{DS(on)}$	Static drain-source on-resistance	V_{GS} = 10 V, I_D = 15 A	-	73	95	mΩ

1. *Specified by design, not tested in production.*

Table 5. Dynamic

Symbol	Parameter	Test conditions	Min.	Typ.	Max.	Unit
C_{iss}	Input capacitance	V_{DS} = 100 V, f = 1 MHz, V_{GS} = 0 V	-	3000	-	pF
C_{oss}	Output capacitance		-	74	-	pF
C_{rss}	Reverse transfer capacitance		-	5.8	-	pF
$C_{o(tr)}$(1)	Equivalent capacitance time related	V_{DS} = 0 to 520 V, V_{GS} = 0 V	-	244	-	pF
$C_{o(er)}$(2)	Equivalent capacitance energy related		-	70	-	pF
R_g	Intrinsic gate resistance	f = 1 MHz, I_D = 0 A	-	2.4	-	Ω
Q_g	Total gate charge	V_{DD} = 520 V, I_D = 15 A, V_{GS} = 0 to 10 V (see the Figure 17. Test circuit for gate charge behavior)	-	71	-	nC
Q_{gs}	Gate-source charge		-	18	-	nC
Q_{gd}	Gate-drain charge		-	30	-	nC

1. *$C_{o(tr)}$ is an equivalent capacitance that provides the same charging time as C_{oss} while V_{DS} is rising from 0 V to the stated value.*
2. *$C_{o(er)}$ is an equivalent capacitance that provides the same stored energy as C_{oss} while V_{DS} is rising from 0 V to the stated value.*

Table 6. Switching times

Symbol	Parameter	Test conditions	Min.	Typ.	Max.	Unit
$t_{d(v)}$	Voltage delay time	V_{DD} = 400 V, I_D = 20 A, R_G = 4.7 Ω, V_{GS} = 10 V (see the Figure 18. Test circuit for inductive load switching and diode recovery times and Figure 21. Switching time waveform)	-	66	-	ns
$t_{r(v)}$	Voltage rise time		-	9	-	ns
$t_{f(i)}$	Current fall time		-	9	-	ns
$t_{c(off)}$	Crossing time		-	13	-	ns

Table 7. Source-drain diode

Symbol	Parameter	Test conditions	Min.	Typ.	Max.	Unit
I_{SD}	Source-drain current		-	-	30	A
I_{SDM}[1]	Source-drain current (pulsed)		-	-	120	A
V_{SD}[2]	Forward on voltage	I_{SD} = 30 A, V_{GS} = 0 V	-	-	1.5	V
t_{rr}	Reverse recovery time	I_{SD} = 30 A, di/dt = 100 A/µs,	-	382	-	ns
Q_{rr}	Reverse recovery charge	V_{DD} = 100 V	-	6.6	-	µC
I_{RRM}	Reverse recovery current	(see the Figure 18. Test circuit for inductive load switching and diode recovery times)	-	35	-	A
t_{rr}	Reverse recovery time	I_{SD} = 30 A, di/dt = 100 A/µs,	-	522	-	ns
Q_{rr}	Reverse recovery charge	V_{DD} = 100 V, T_J = 150 °C	-	10.3	-	µC
I_{RRM}	Reverse recovery current	(see the Figure 18. Test circuit for inductive load switching and diode recovery times)	-	40	-	A

1. *Pulse width is limited by safe operating area.*
2. *Pulsed: pulse duration = 300 µs, duty cycle 1.5%.*

2.1 Electrical characteristics (curves)

Figure 1. Safe operating area for TO-220FP

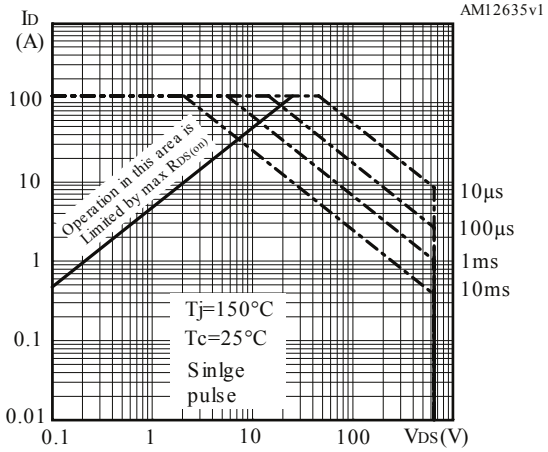

Figure 2. Normalized transient thermal impedance for TO-220FP

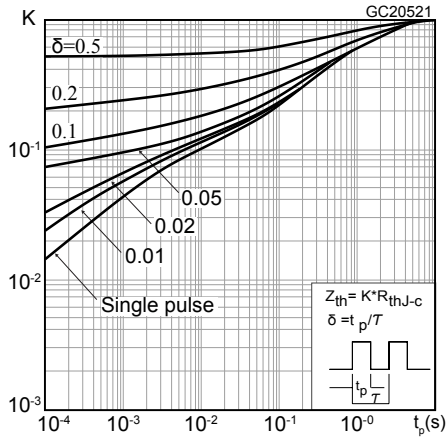

Figure 3. Safe operating area for TO-3PF

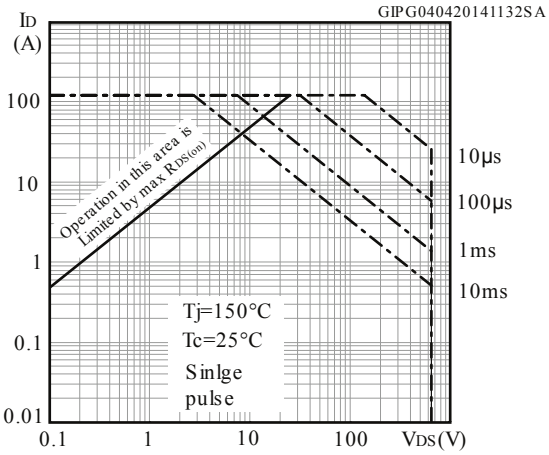

Figure 4. Normalized transient thermal impedance for TO-3PF

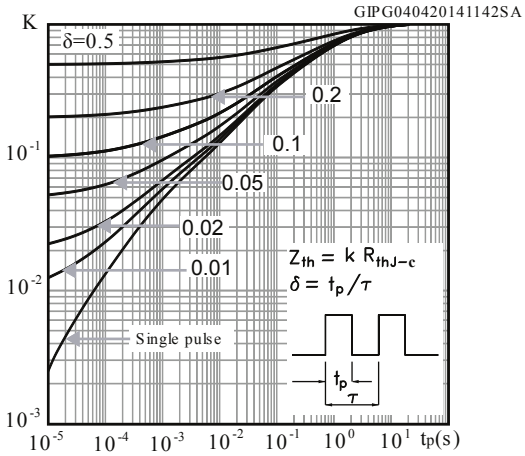

Figure 5. Typical output characteristics

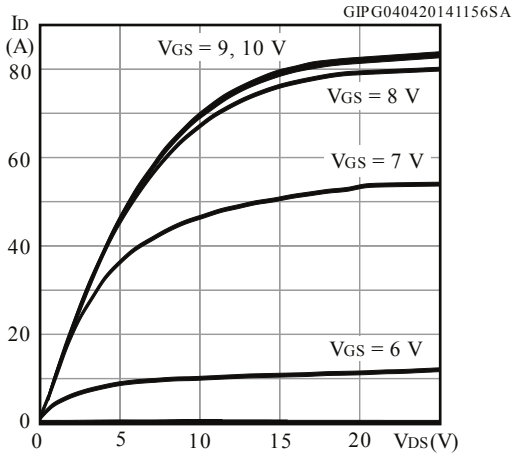

Figure 6. Typical transfer characteristics

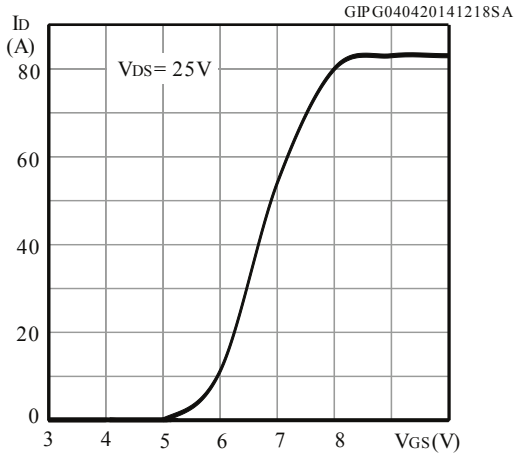

Figure 7. Typical gate charge characteristics

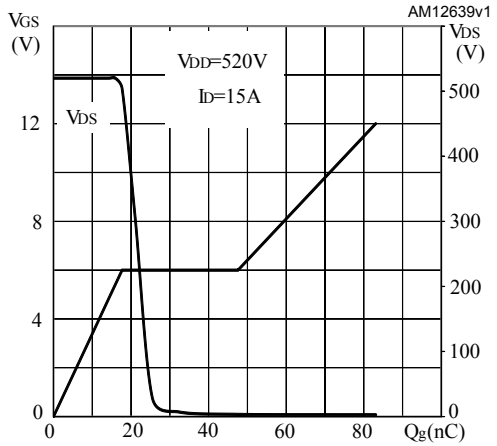

Figure 8. Typical drain-source on-resistance

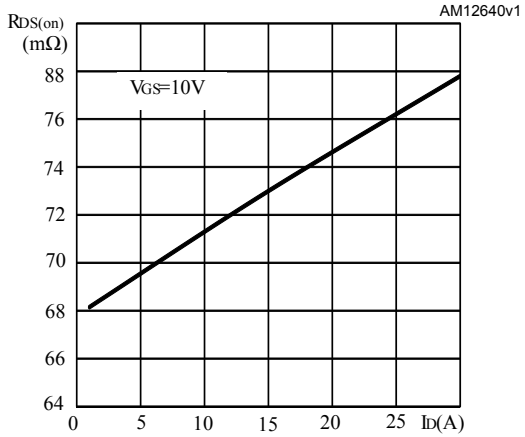

Figure 9. Typical capacitance characteristics

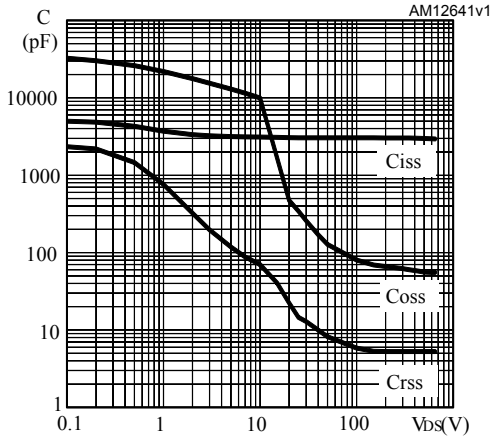

Figure 10. Typical output capacitance stored energy

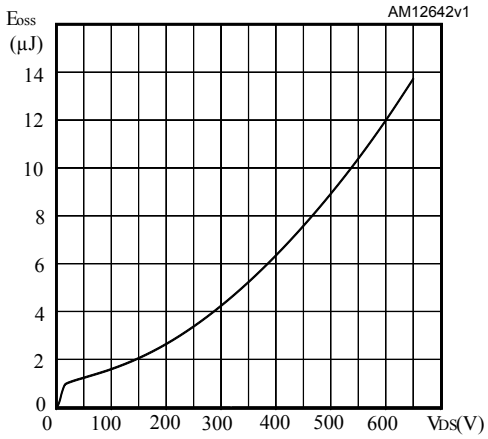

Figure 11. Normalized gate threshold voltage vs temperature

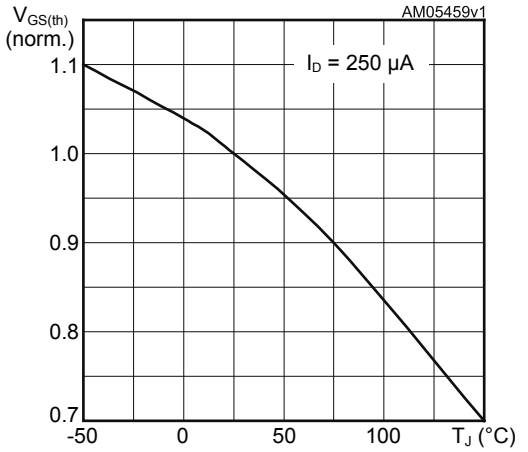

Figure 12. Normalized on-resistance vs temperature

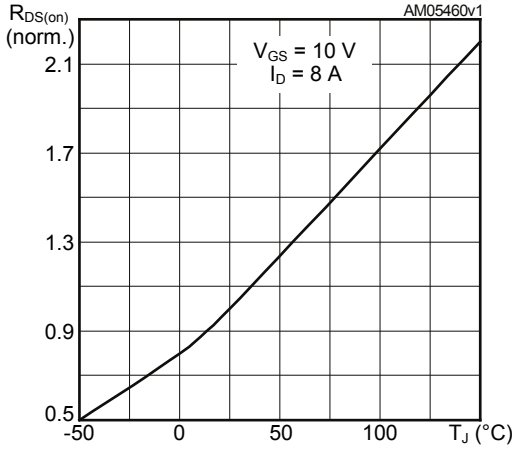

Figure 13. Typical reverse diode forward characteristics

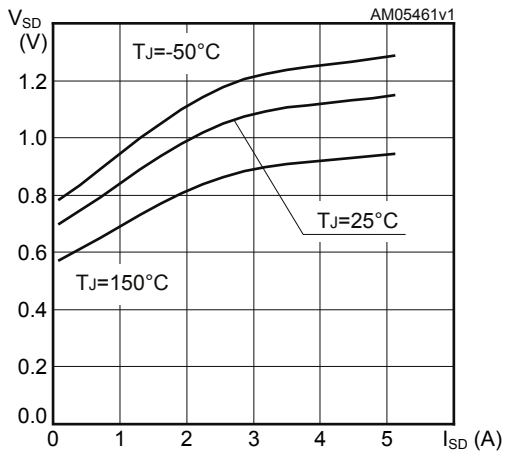

Figure 14. Normalized breakdown voltage vs temperature

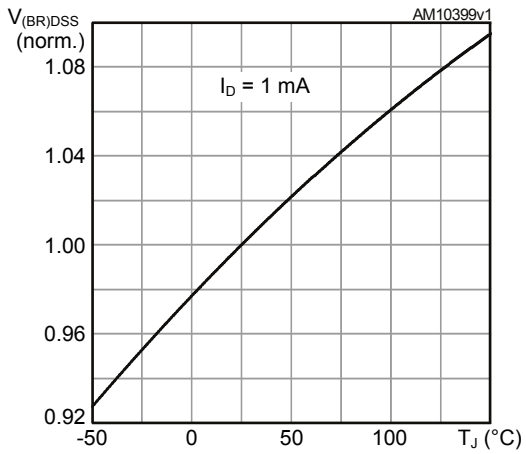

Figure 15. Typical switching energy vs gate resistance

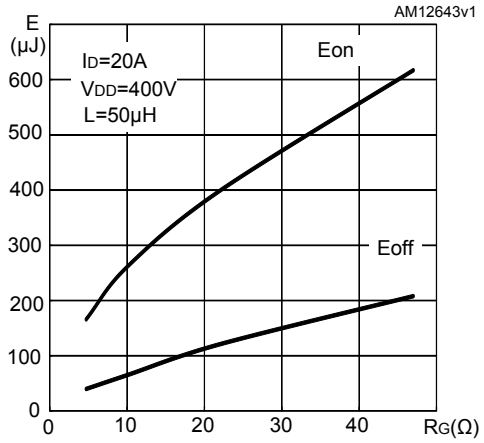

Note: *E_{on} including reverse recovery of a SiC diode.*

3 Test circuits

Figure 16. Test circuit for resistive load switching times

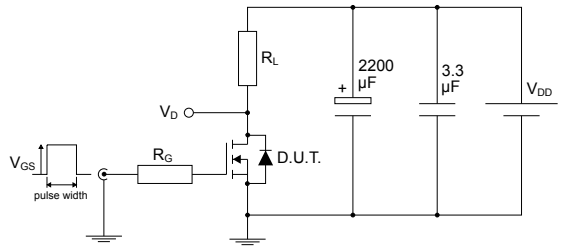

AM01468v1

Figure 17. Test circuit for gate charge behavior

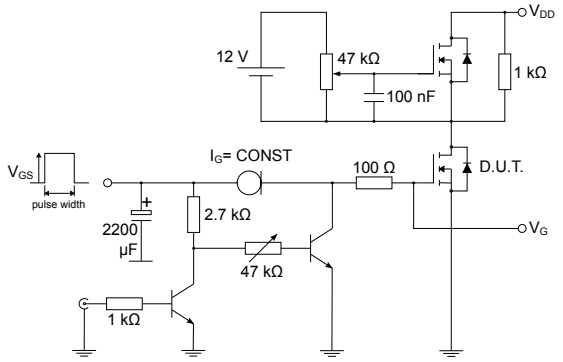

AM01469v1

Figure 18. Test circuit for inductive load switching and diode recovery times

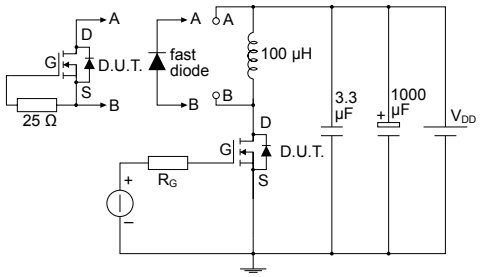

AM01470v1

Figure 19. Unclamped inductive load test circuit

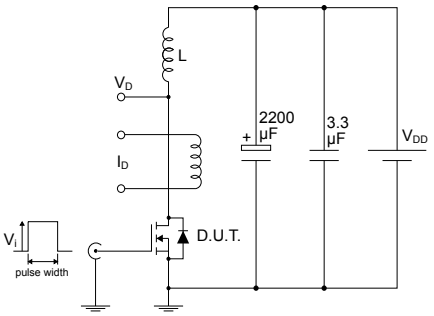

AM01471v1

Figure 20. Unclamped inductive waveform

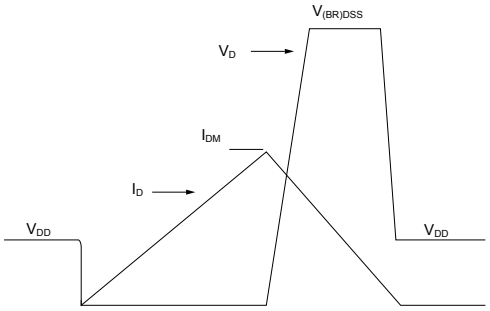

AM01472v1

Figure 21. Switching time waveform

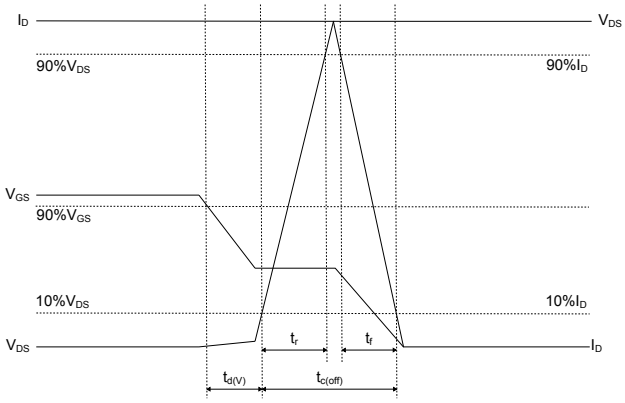

AM05540v2

4 Package information

To meet environmental requirements, ST offers these devices in different grades of ECOPACK packages, depending on their level of environmental compliance. ECOPACK specifications, grade definitions, and product status are available at: www.st.com. ECOPACK is an ST trademark.

4.1 TO-220FP type B package information

Figure 22. TO-220FP type B package outline

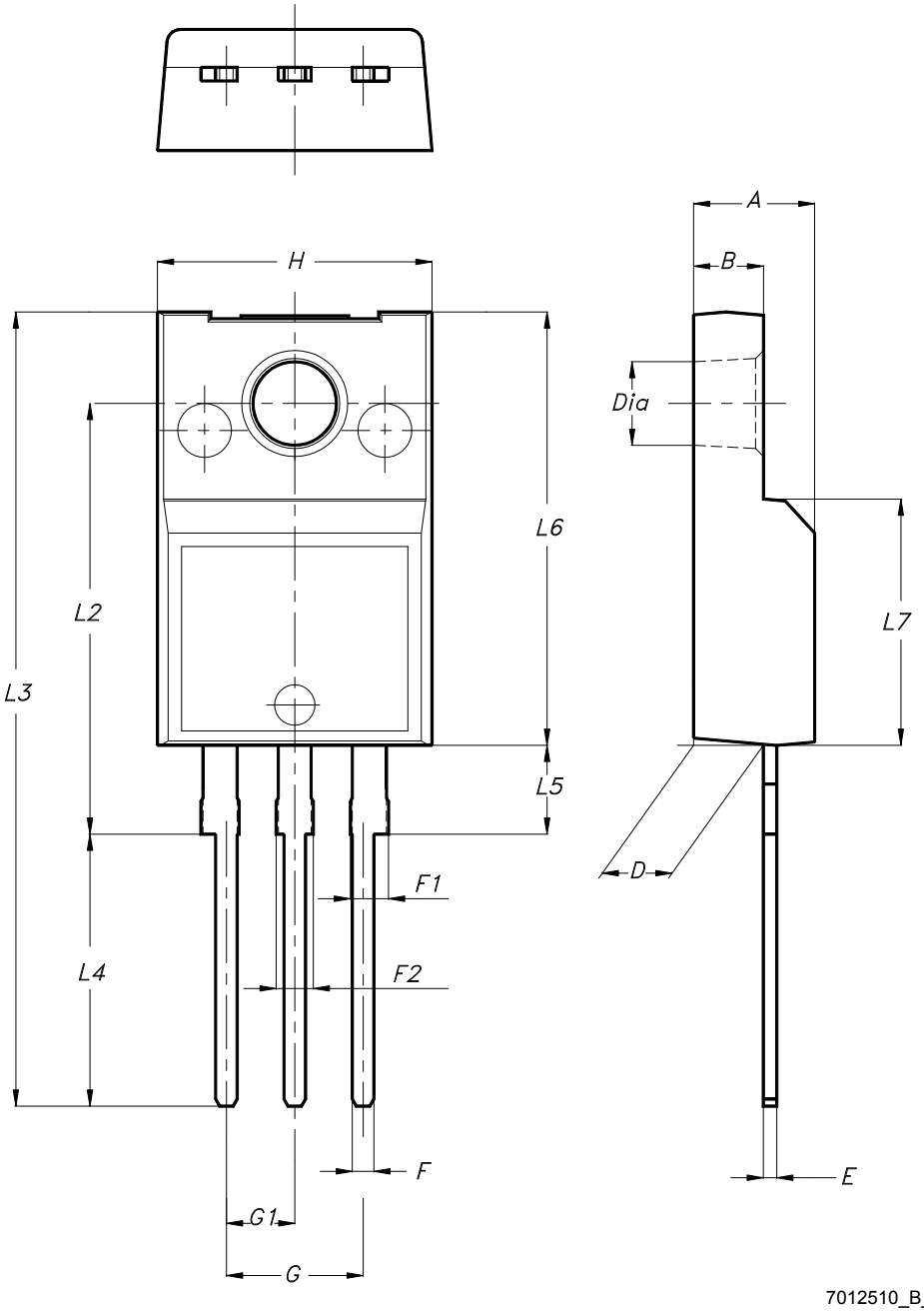

Table 8. **TO-220FP type B package mechanical data**

Dim.	mm		
	Min.	Typ.	Max.
A	4.40		4.60
B	2.50		2.70
D	2.50		2.75
E	0.45		0.70
F	0.75		1.00
F1	1.15		1.70
F2	1.15		1.70
G	4.95		5.20
G1	2.40		2.70
H	10.00		10.40
L2		16.00	
L3	28.60		30.60
L4	9.80		10.60
L5	2.90		3.60
L6	15.90		16.40
L7	9.00		9.30
Dia	3.00		3.20

4.2 TO-3PF type A package information

Figure 23. TO-3PF type A package outline

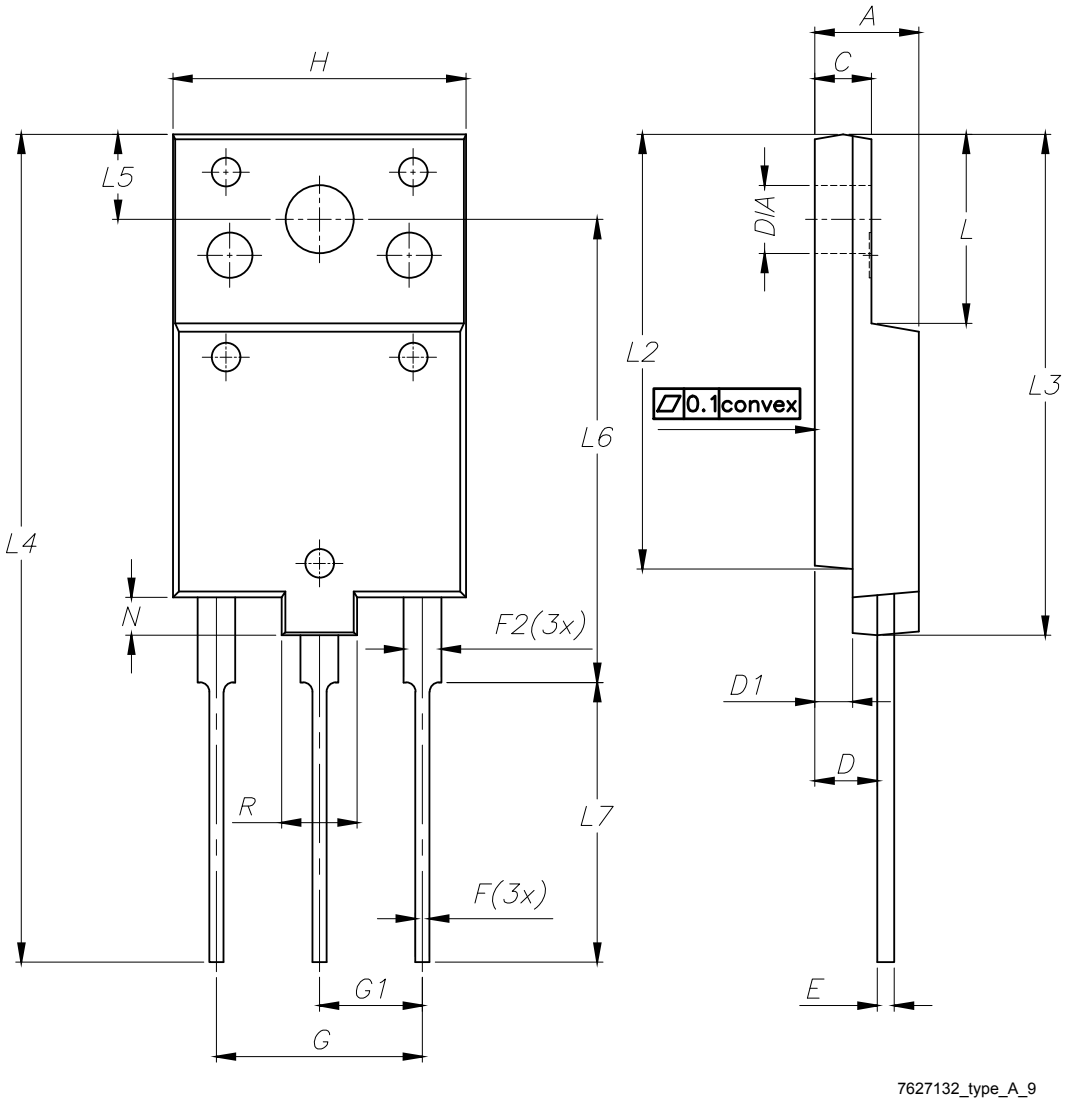

Table 9. TO-3PF type A mechanical data

Dim.	mm		
	Min.	Typ.	Max.
A	5.30		5.70
C	2.80		3.20
D	3.10		3.50
D1	1.80		2.20
E	0.80		1.00
F	0.65		0.85
F2	1.80		2.20
G	10.80		11.00
G1	5.35	5.45	5.55
H	15.30		15.70
L	9.80	10.00	10.20
L2	22.80		23.20
L3	26.30		26.70
L4	43.60		44.00
L5	4.30		4.70
L6	24.30		24.70
L7	14.60		15.00
N	1.80		2.20
R	3.80		4.20
Dia	3.40		3.80

4.3 TO-3PF type B package information

Figure 24. TO-3PF type B package outline

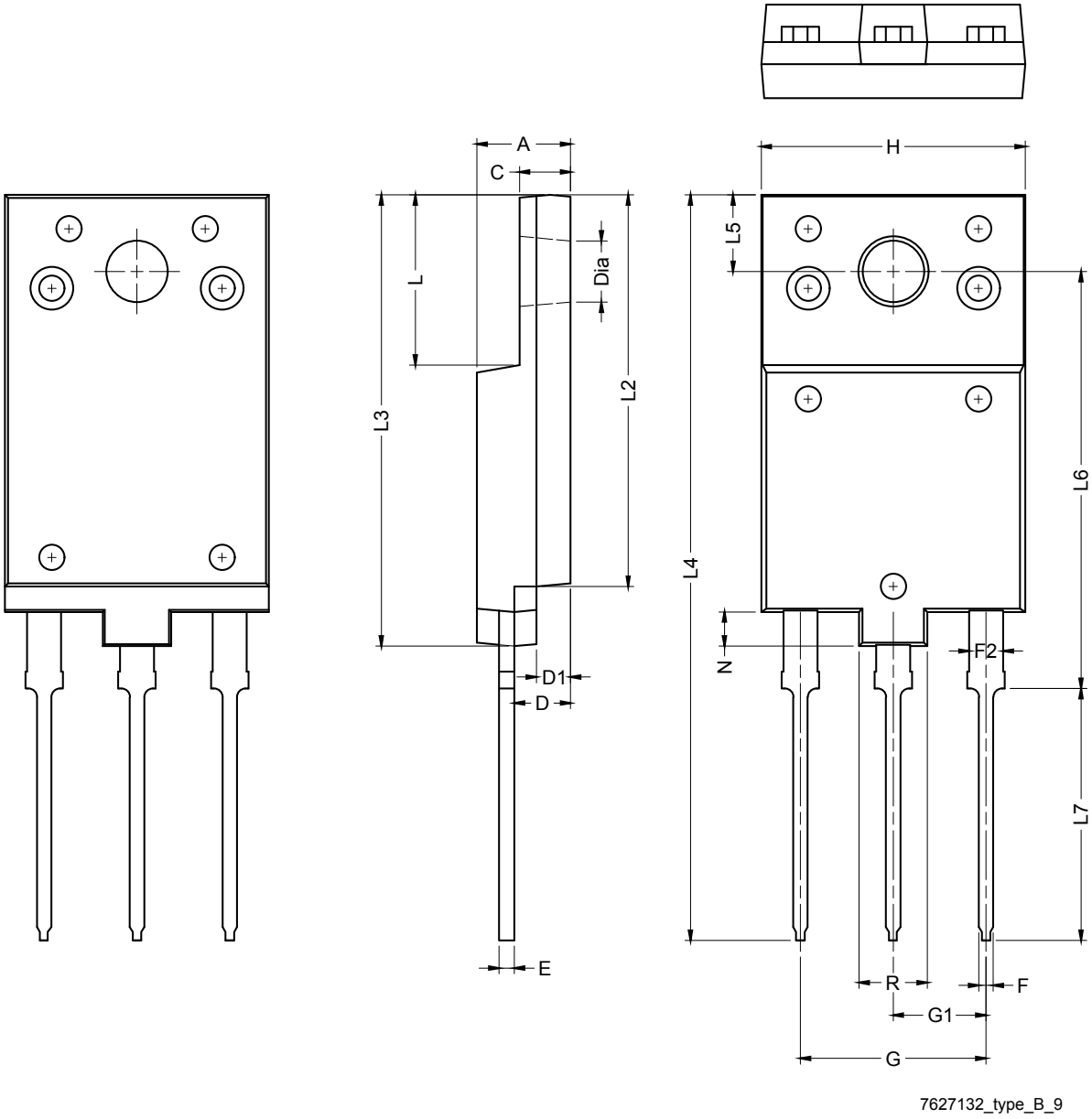

Table 10. TO-3PF type B mechanical data

Dim.	mm		
	Min.	Typ.	Max.
A	5.30	5.50	5.70
C	2.80	3.00	3.20
D	3.10	3.30	3.50
D1	1.80	2.00	2.20
E	0.80	0.95	1.10
F	0.65	0.80	0.95
F2	1.80	2.00	2.20
G	10.30	10.90	11.50
G1		5.45	
H	15.30	15.50	15.70
L	9.80	10.00	10.20
L2	22.80	23.00	23.20
L3	26.30	26.50	26.70
L4	43.20	43.80	44.40
L5	4.30	4.50	4.70
L6	24.30	24.50	24.70
L7	14.60	14.80	15.00
N	1.80	2.00	2.20
R	3.80	4.00	4.20
Dia	3.40	3.60	3.80

Revision history

Table 11. Document revision history

Date	Revision	Changes
14-Apr-2014	1	First release. Part numbers previously included in datasheet DocID022851.
25-Jul-2025	2	Updated Section 4: Package information. Minor text changes.
11-Aug-2025	3	Updated title in Figure 13. Typical reverse diode forward characteristics and Figure 14. Normalized breakdown voltage vs temperature.

Contents

1 Electrical ratings 2

2 Electrical characteristics 3

2.1 Electrical characteristics (curves) 5

3 Test circuits 8

4 Package information 9

4.1 TO-220FP type B package information 9

4.2 TO-3PF type A package information 11

4.3 TO-3PF type B package information 13

Revision history 15

IMPORTANT NOTICE – READ CAREFULLY

STMicroelectronics NV and its subsidiaries (“ST”) reserve the right to make changes, corrections, enhancements, modifications, and improvements to ST products and/or to this document at any time without notice.

In the event of any conflict between the provisions of this document and the provisions of any contractual arrangement in force between the purchasers and ST, the provisions of such contractual arrangement shall prevail.

The purchasers should obtain the latest relevant information on ST products before placing orders. ST products are sold pursuant to ST’s terms and conditions of sale in place at the time of order acknowledgment.

The purchasers are solely responsible for the choice, selection, and use of ST products and ST assumes no liability for application assistance or the design of the purchasers’ products.

No license, express or implied, to any intellectual property right is granted by ST herein.

Resale of ST products with provisions different from the information set forth herein shall void any warranty granted by ST for such product.

If the purchasers identify an ST product that meets their functional and performance requirements but that is not designated for the purchasers' market segment, the purchasers shall contact ST for more information.

ST and the ST logo are trademarks of ST. For additional information about ST trademarks, refer to www.st.com/trademarks. All other product or service names are the property of their respective owners.

Information in this document supersedes and replaces information previously supplied in any prior versions of this document.

© 2025 STMicroelectronics – All rights reserved