STB33N60DM2, STP33N60DM2, STW33N60DM2

Datasheet

N-channel 600 V, 110 mΩ typ., 24 A MDmesh DM2 Power MOSFET in D²PAK, TO-220 and TO-247 packages

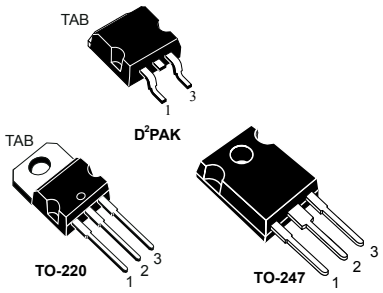

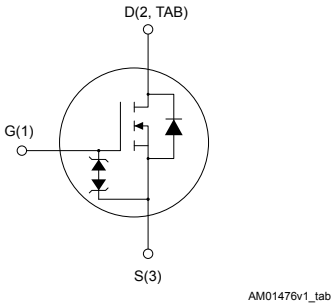

Features

Order code	V_{DS} @ $T_{Jmax.}$	$R_{DS(on)}$ max.	I_D
STB33N60DM2	650 V	130 mΩ	24 A
STP33N60DM2			
STW33N60DM2			

- Fast-recovery body diode
- Extremely low gate charge and input capacitance
- Low on-resistance
- 100% avalanche tested
- Extremely high dv/dt ruggedness
- Zener-protected

Applications

- Switching applications

Description

These high voltage N-channel Power MOSFETs are part of the MDmesh DM2 fast recovery diode series. They offer very low recovery charge (Q_{rr}) and time (t_{rr}) combined with low $R_{DS(on)}$, rendering them suitable for the most demanding high efficiency converters and ideal for bridge topologies and ZVS phase-shift converters.

Product status link
STB33N60DM2
STP33N60DM2
STW33N60DM2

1 Electrical ratings

Table 1. Absolute maximum ratings

Symbol	Parameter	Value	Unit
V_{GS}	Gate-source voltage (static)	±25	V
	Gate-source voltage (dynamic AC, f > 1 Hz)	±30	
I_D	Drain current (continuous) at T_C = 25 °C	24	A
	Drain current (continuous) at T_C = 100 °C	15.5	
I_{DM} (1)	Drain current (pulsed)	96	A
P_{TOT}	Total power dissipation at T_C = 25 °C	190	W
dv/dt (2)	Peak diode recovery voltage slope	100	V/ns
di/dt (2)	Peak diode recovery current slope	1000	A/µs
dv/dt (3)	MOSFET dv/dt ruggedness	100	V/ns
T_{stg}	Storage temperature range	-55 to 150	°C
T_J	Operating junction temperature range		

1. *Pulse width is limited by safe operating area.*
2. *I_{SD} ≤ 24 A, V_{DS} peak < $V_{(BR)DSS}$, V_{DD} = 400 V.*
3. *V_{DS} ≤ 480 V.*

Table 2. Thermal data

Symbol	Parameter	Value			Unit
		D²PAK	TO-220	TO-247	
R_{thJC}	Thermal resistance, junction-to-case	0.66			°C/W
R_{thJA}	Thermal resistance, junction-to-ambient	30(1)	62.5	50	

1. *When mounted on a standard 1 inch² area of FR-4 PCB with 2-oz copper.*

Table 3. Avalanche characteristics

Symbol	Parameter	Value	Unit
I_{AR}	Avalanche current, repetitive or not repetitive (Pulse width limited by T_{Jmax})	5.5	A
E_{AS}	Single pulse avalanche energy (starting T_J = 25 °C, I_D = I_{AR}, V_{DD} = 50 V)	570	mJ

2 Electrical characteristics

(T_{case} = 25 °C unless otherwise specified)

Table 4. Static

Symbol	Parameter	Test conditions	Min.	Typ.	Max.	Unit
$V_{(BR)DSS}$	Drain-source breakdown voltage	V_{GS} = 0 V, I_D = 1 mA	600			V
I_{DSS}	Zero gate voltage drain current	V_{GS} = 0 V, V_{DS} = 600 V			1	µA
		V_{GS} = 0 V, V_{DS} = 600 V, T_C = 125 °C (1)			100	
I_{GSS}	Gate-body leakage current	V_{DS} = 0 V, V_{GS} = ±25 V			±10	µA
$V_{GS(th)}$	Gate threshold voltage	V_{DS} = V_{GS}, I_D = 250 µA	3	4	5	V
$R_{DS(on)}$	Static drain-source on-resistance	V_{GS} = 10 V, I_D = 12 A		110	130	mΩ

1. *Specified by design, not tested in production.*

Table 5. Dynamic

Symbol	Parameter	Test conditions	Min.	Typ.	Max.	Unit
C_{iss}	Input capacitance	V_{DS} = 100 V, f = 1 MHz, V_{GS} = 0 V	-	1870	-	pF
C_{oss}	Output capacitance		-	87	-	
C_{rss}	Reverse transfer capacitance		-	2	-	
$C_{oss\ eq.}$ (1)	Equivalent output capacitance	V_{DD} = 480 V, V_{GS} = 0 V	-	157	-	pF
R_G	Intrinsic gate resistance	f = 1 MHz, I_D= 0 A	-	4.5	-	Ω
Q_g	Total gate charge	V_{DD} = 480 V, I_D = 24 A, V_{GS} = 0 to 10 V (see Figure 18. Test circuit for gate charge behavior)	-	43	-	nC
Q_{gs}	Gate-source charge		-	9.8	-	
Q_{gd}	Gate-drain charge		-	21	-	

1. *$C_{oss\ eq.}$ is defined as a constant equivalent capacitance giving the same charging time as C_{oss} when V_{DS} increases from 0 to 80% V_{DSS}.*

Table 6. Switching times

Symbol	Parameter	Test conditions	Min.	Typ.	Max.	Unit
$t_{d(on)}$	Turn-on delay time	V_{DD} = 300 V, I_D = 12 A R_G = 4.7 Ω, V_{GS} = 10 V (see Figure 17. Test circuit for resistive load switching times and Figure 22. Switching time waveform)	-	17	-	ns
t_r	Rise time		-	8	-	
$t_{d(off)}$	Turn-off delay time		-	62	-	
t_f	Fall time		-	9	-	

Table 7. Source-drain diode

Symbol	Parameter	Test conditions	Min.	Typ.	Max.	Unit
I_{SD}	Source-drain current		-		24	A
I_{SDM} (1)	Source-drain current (pulsed)		-		96	A
V_{SD} (2)	Forward on voltage	V_{GS} = 0 V, I_{SD} = 24 A	-		1.6	V
t_{rr}	Reverse recovery time	I_{SD} = 24 A, di/dt = 100 A/µs, V_{DD} = 60 V (see Figure 19. Test circuit for inductive load switching and diode recovery times)	-	150		ns
Q_{rr}	Reverse recovery charge		-	0.5		µC
I_{RRM}	Reverse recovery current		-	8.8		A
t_{rr}	Reverse recovery time	I_{SD} = 24 A, di/dt = 100 A/µs, V_{DD} = 60 V, T_j = 150 °C (see Figure 19. Test circuit for inductive load switching and diode recovery times)	-	316		ns
Q_{rr}	Reverse recovery charge		-	2.85		µC
I_{RRM}	Reverse recovery current		-	18		A

1. *Pulse width is limited by safe operating area.*
2. *Pulse test: pulse duration = 300 µs, duty cycle 1.5%.*

2.1 Electrical characteristics curves

Figure 1. Safe operating area for D²PAK

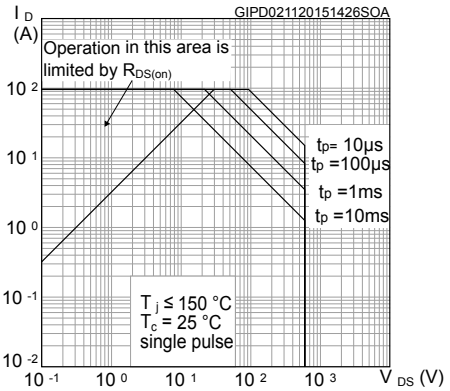

Figure 2. Thermal impedance for D²PAK

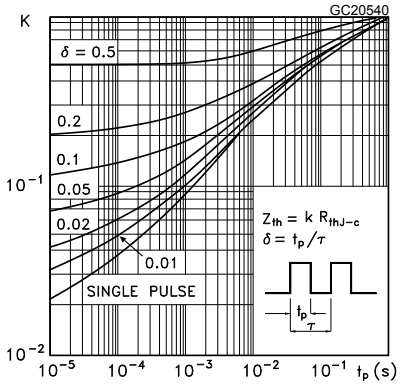

Figure 3. Safe operating area for TO-220

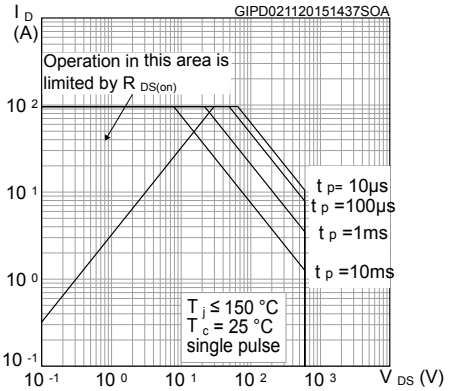

Figure 4. Thermal impedance for TO-220

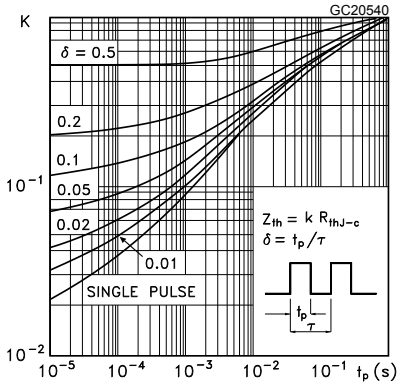

Figure 5. Safe operating area for TO-247

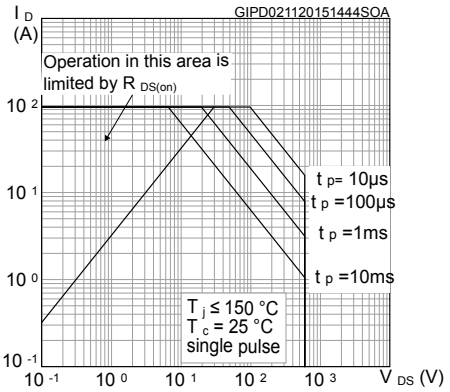

Figure 6. Thermal impedance for TO-247

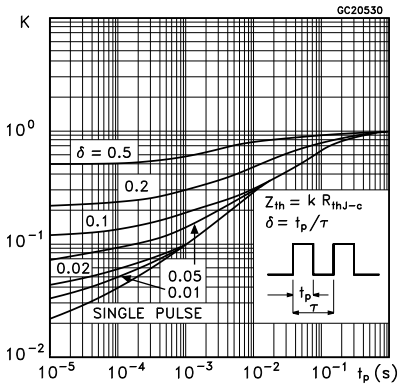

Figure 7. Output characteristics

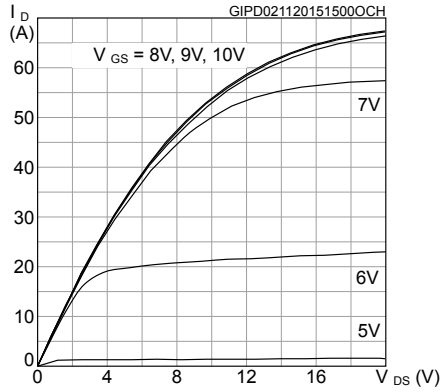

Figure 8. Transfer characteristics

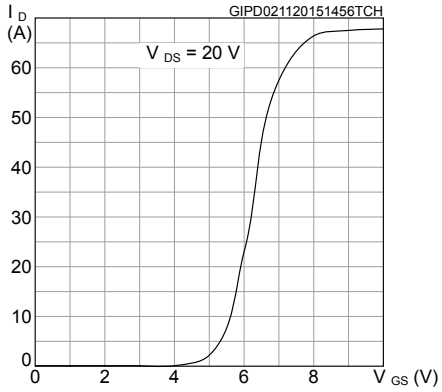

Figure 9. Gate charge vs gate-source voltage

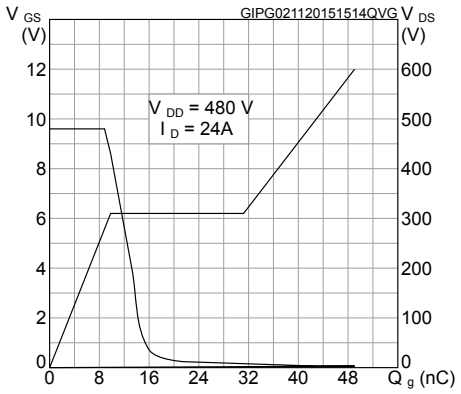

Figure 10. Static drain-source on-resistance

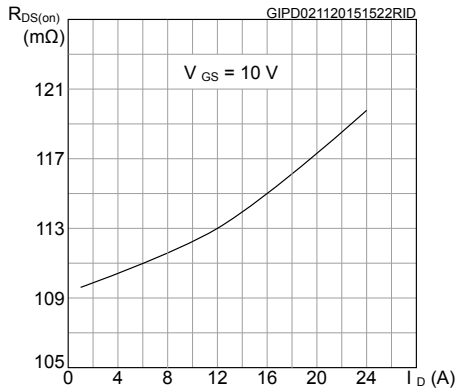

Figure 11. Capacitance variations

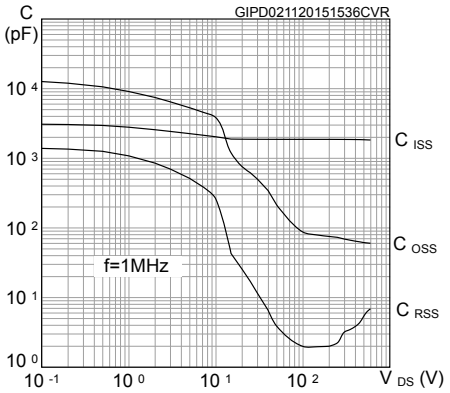

Figure 12. Normalized gate threshold voltage vs temperature

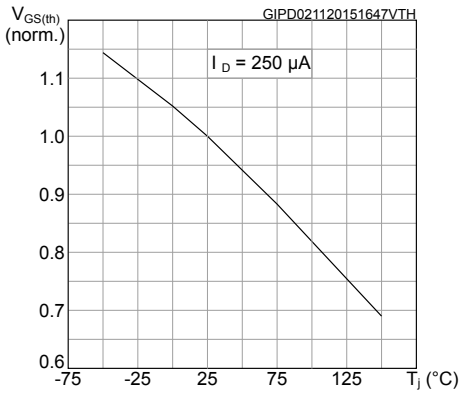

Figure 13. Normalized on-resistance vs temperature

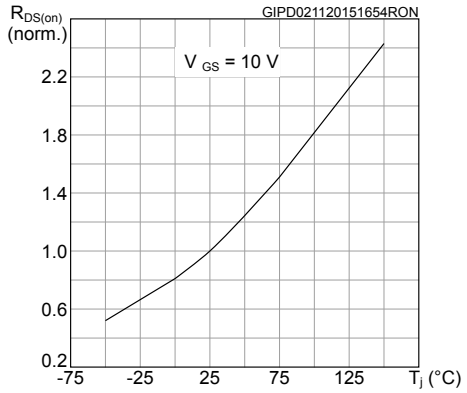

Figure 14. Normalized $V_{(BR)DSS}$ vs temperature

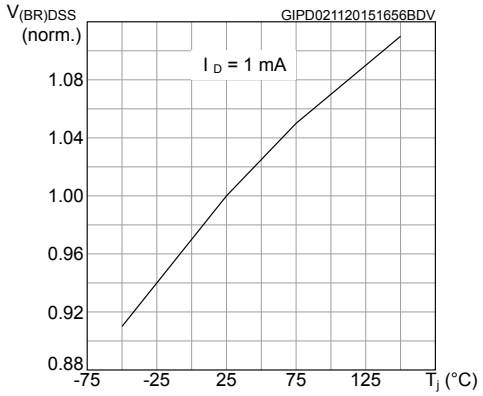

Figure 15. Output capacitance stored energy

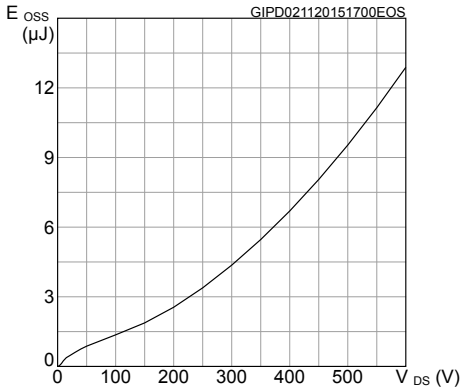

Figure 16. Source- drain diode forward characteristics

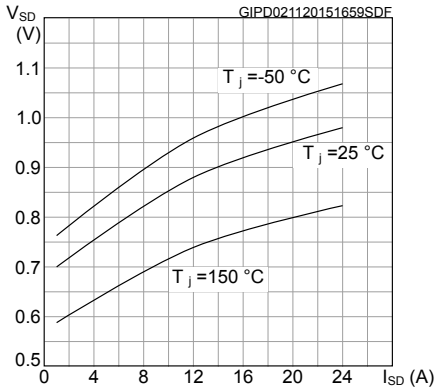

3 Test circuits

Figure 17. Test circuit for resistive load switching times

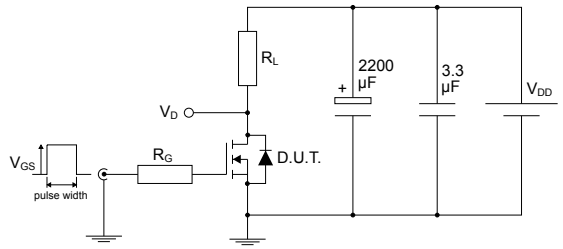

AM01468v1

Figure 18. Test circuit for gate charge behavior

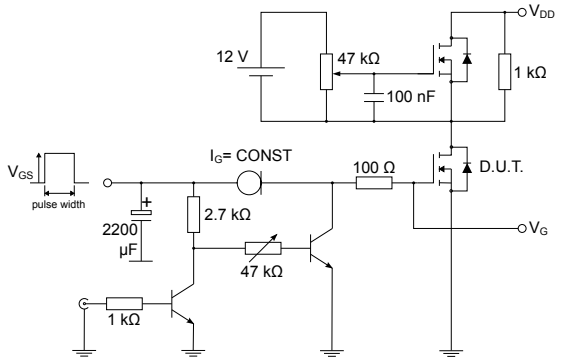

AM01469v1

Figure 19. Test circuit for inductive load switching and diode recovery times

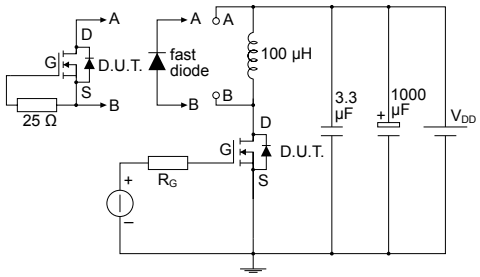

AM01470v1

Figure 20. Unclamped inductive load test circuit

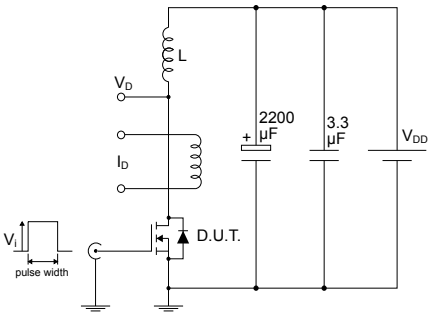

AM01471v1

Figure 21. Unclamped inductive waveform

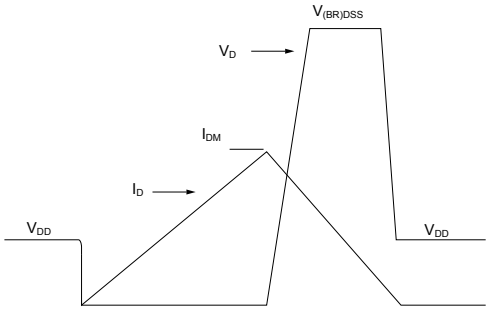

AM01472v1

Figure 22. Switching time waveform

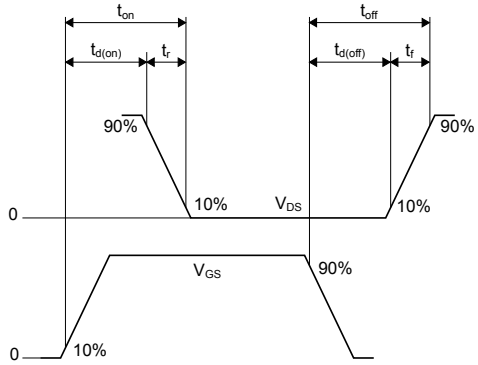

AM01473v1

4 Package information

To meet environmental requirements, ST offers these devices in different grades of ECOPACK packages, depending on their level of environmental compliance. ECOPACK specifications, grade definitions, and product status are available at: www.st.com. ECOPACK is an ST trademark.

4.1 D²PAK (TO-263) type A package information

Figure 23. D²PAK (TO-263) type A package outline

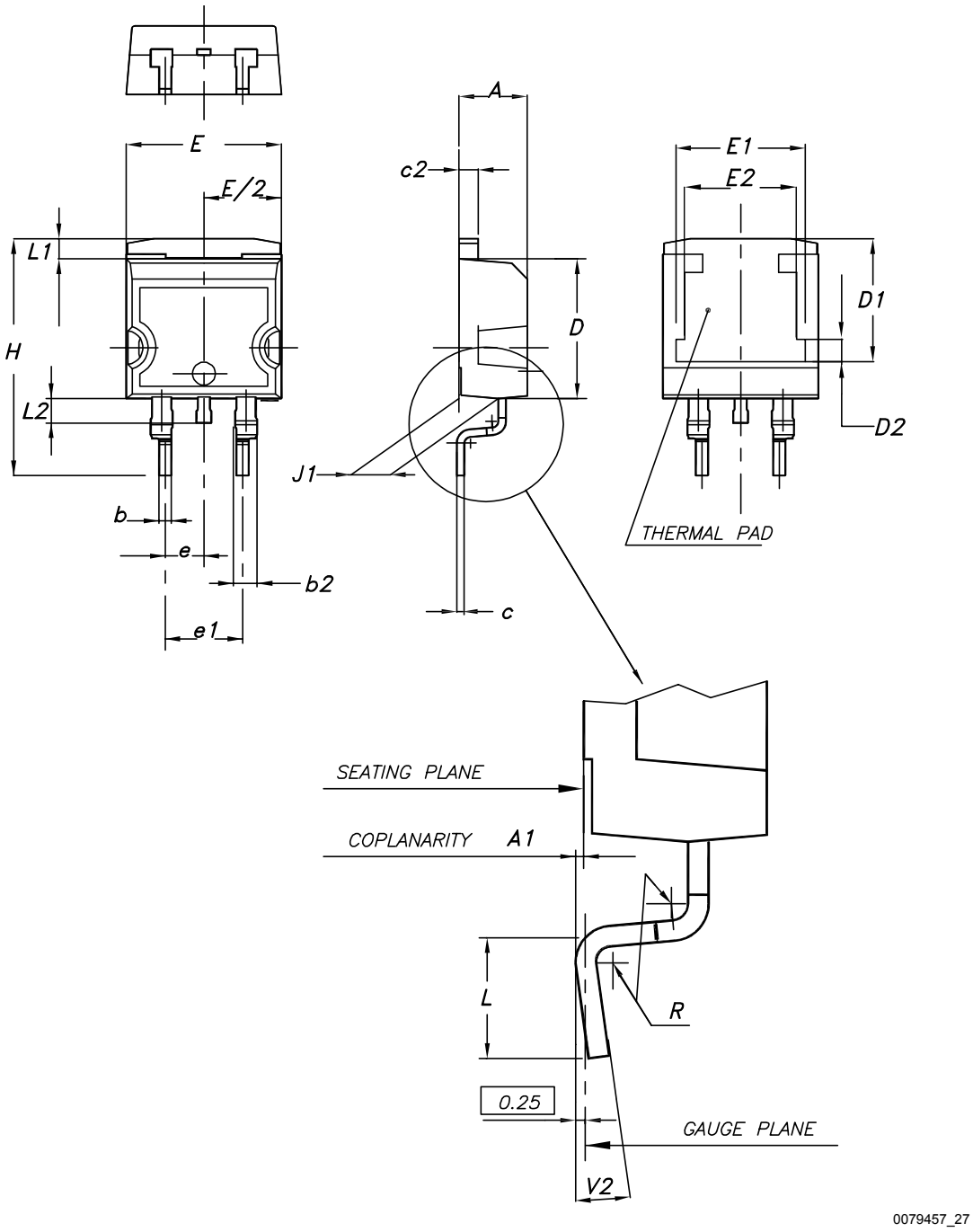

Table 8. D²PAK (TO-263) type A package mechanical data

Dim.	mm		
	Min.	Typ.	Max.
A	4.40		4.60
A1	0.03		0.23
b	0.70		0.93
b2	1.14		1.70
c	0.45		0.60
c2	1.23		1.36
D	8.95		9.35
D1	7.50	7.75	8.00
D2	1.10	1.30	1.50
E	10.00		10.40
E1	8.30	8.50	8.70
E2	6.85	7.05	7.25
e		2.54	
e1	4.88		5.28
H	15.00		15.85
J1	2.49		2.69
L	2.29		2.79
L1	1.27		1.40
L2	1.30		1.75
R		0.40	
V2	0°		8°

Figure 24. D²PAK (TO-263) recommended footprint (dimensions are in mm)

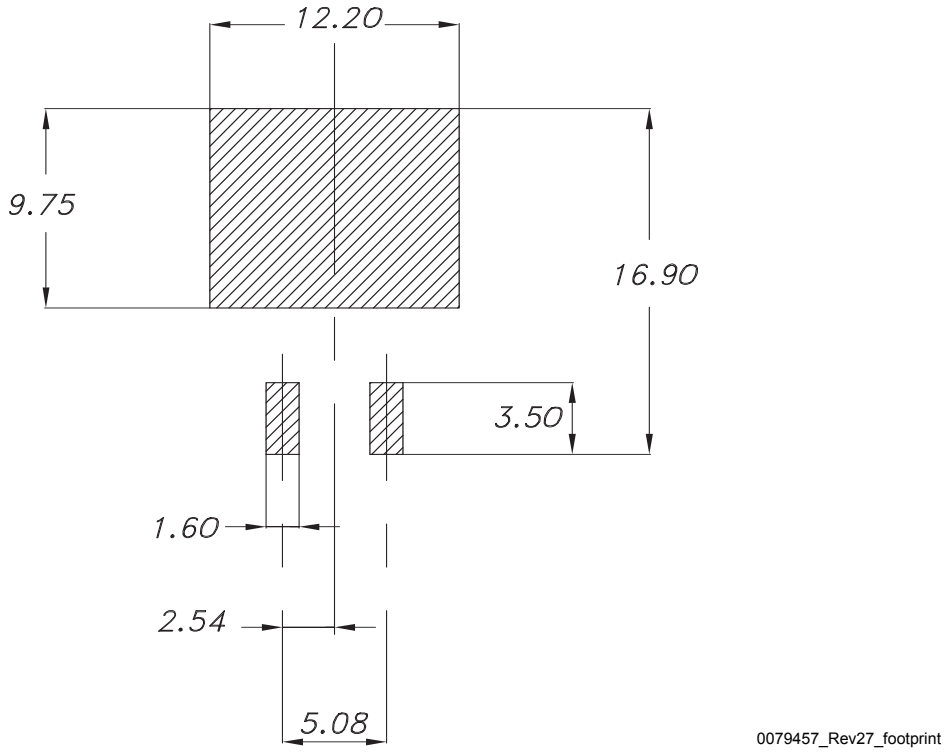

4.2 D²PAK packing information

Figure 25. D²PAK tape drawing (dimensions are in mm)

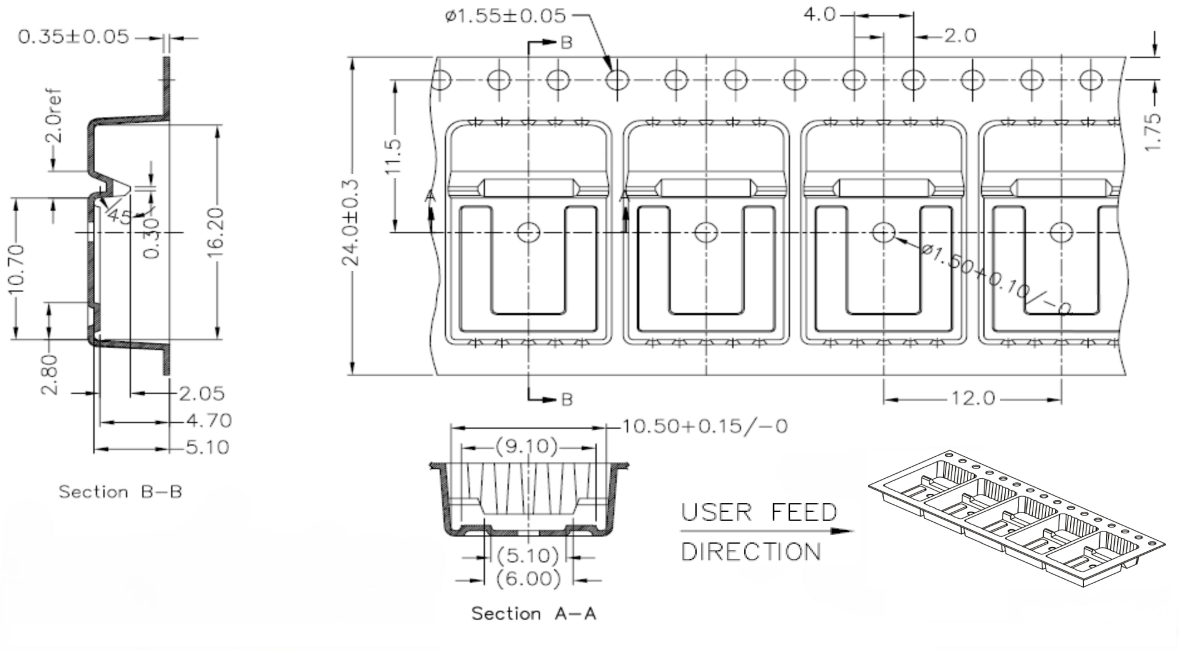

4.3 TO-220 type A package information

Figure 26. TO-220 type A package outline

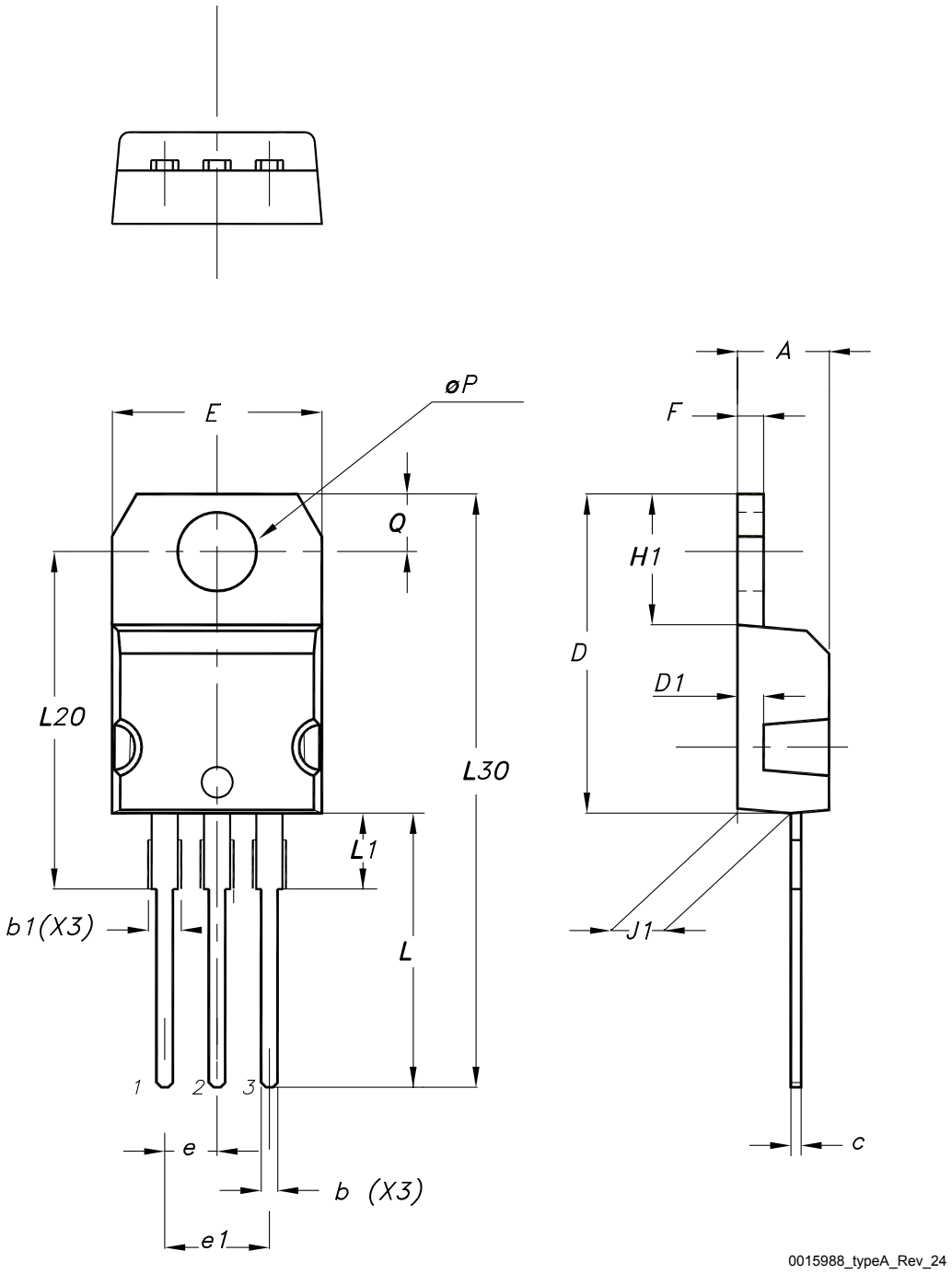

Table 9. **TO-220 type A package mechanical data**

Dim.	mm		
	Min.	Typ.	Max.
A	4.40		4.60
b	0.61		0.88
b1	1.14		1.55
c	0.48		0.70
D	15.25		15.75
D1		1.27	
E	10.00		10.40
e	2.40		2.70
e1	4.95		5.15
F	1.23		1.32
H1	6.20		6.60
J1	2.40		2.72
L	13.00		14.00
L1	3.50		3.93
L20		16.40	
L30		28.90	
øP	3.75		3.85
Q	2.65		2.95
Slug flatness		0.03	0.10

4.4 TO-247 package information

Figure 27. **TO-247 package outline**

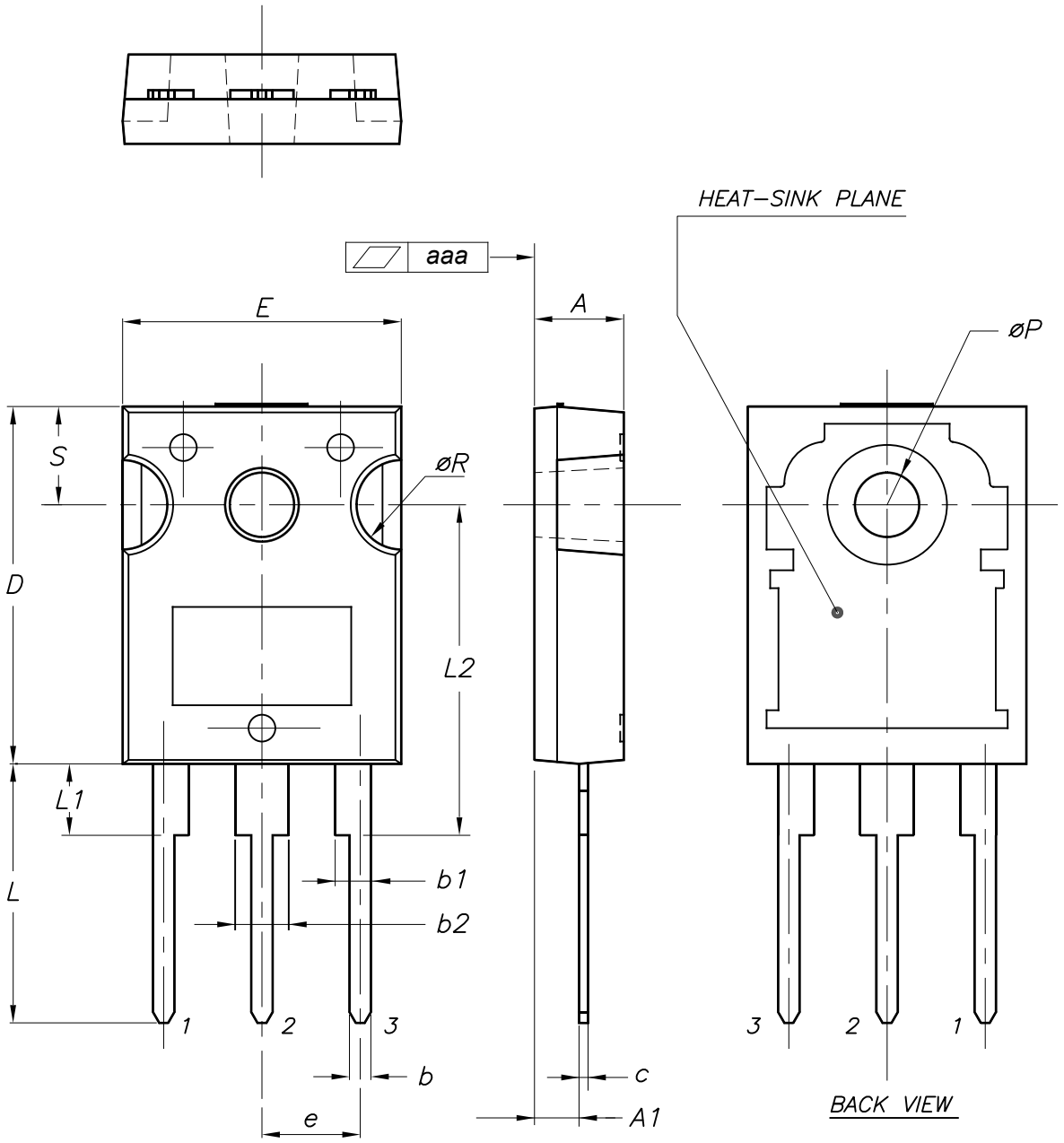

0075325_10

Table 10. TO-247 package mechanical data

Dim.	mm		
	Min.	Typ.	Max.
A	4.85		5.15
A1	2.20		2.60
b	1.0		1.40
b1	2.0		2.40
b2	3.0		3.40
c	0.40		0.80
D	19.85		20.15
E	15.45		15.75
e	5.30	5.45	5.60
L	14.20		14.80
L1	3.70		4.30
L2		18.50	
ØP	3.55		3.65
ØR	4.50		5.50
S	5.30	5.50	5.70
aaa		0.04	0.10

5 Ordering information

Table 11. **Order codes**

Order code	Marking	Package	Packing
STB33N60DM2	33N60DM2	D^2PAK	Tape e reel
STP33N60DM2		TO-220	Tube
STW33N60DM2		TO-247	Tube

Revision history

Table 12. Document revision history

Date	Revision	Changes
16-Oct-2014	1	First release.
02-Nov-2015	2	Document status promoted from preliminary to production data. Updated title and features in cover page. Updated *Table 2: "Absolute maximum ratings"*, *Table 4: "Avalanche characteristics"*, *Table 5: "Static"*, *Table 6: "Dynamic"*, *Table 7: "Switching times"* and *Table 8: "Source-drain diode"*. Added *Section 2.1 Electrical characteristics (curves)*.
19-Oct-2020	3	Updated *Section 1 Electrical ratings.* Minor text changes.
01-Aug-2025	4	Updated Section 4: Package information. Minor text changes.

IMPORTANT NOTICE – READ CAREFULLY

STMicroelectronics NV and its subsidiaries (“ST”) reserve the right to make changes, corrections, enhancements, modifications, and improvements to ST products and/or to this document at any time without notice.

In the event of any conflict between the provisions of this document and the provisions of any contractual arrangement in force between the purchasers and ST, the provisions of such contractual arrangement shall prevail.

The purchasers should obtain the latest relevant information on ST products before placing orders. ST products are sold pursuant to ST’s terms and conditions of sale in place at the time of order acknowledgment.

The purchasers are solely responsible for the choice, selection, and use of ST products and ST assumes no liability for application assistance or the design of the purchasers’ products.

No license, express or implied, to any intellectual property right is granted by ST herein.

Resale of ST products with provisions different from the information set forth herein shall void any warranty granted by ST for such product.

If the purchasers identify an ST product that meets their functional and performance requirements but that is not designated for the purchasers' market segment, the purchasers shall contact ST for more information.

ST and the ST logo are trademarks of ST. For additional information about ST trademarks, refer to www.st.com/trademarks. All other product or service names are the property of their respective owners.

Information in this document supersedes and replaces information previously supplied in any prior versions of this document.

© 2025 STMicroelectronics – All rights reserved