MLPF-WL-02D3

Datasheet

Low pass filter matched to STM32WL3xxx in high power mode, 20 dBm, 826-958 MHz, 4-layer PCB

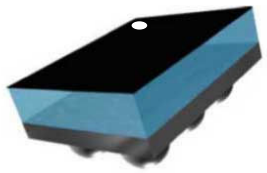

Chip scale package on glass 5 bumps

Product status link
MLPF-WL-02D3

Features

- Integrated impedance matching to STM32WL3xxx
- 50 Ω nominal impedance on antenna side
- Deep rejection harmonic filter
- Low insertion loss
- Small footprint
- Low profile ≤ 630 µm after reflow
- High RF performances
- RF BOM and area reduction
- ECOPACK2 compliant component

Applications

- STM32WL3 sub-GHz wireless microcontrollers

Description

The MLPF-WL-02D3 integrates an impedance matching network and harmonics filter. The matching impedance network has been tailored to maximize the RF performances of STM32WL3xxx. The MLPF-WL-02D3 uses STMicroelectronics IPD technology on non-conductive glass substrate, which optimizes RF performances.

1 Characteristics

Table 1. Absolute ratings (T_{amb} = 25 °C)

Symbol	Parameter	Value	Unit
P_{IN}	Input power RF_{IN}	27	dBm
V_{ESD}	ESD ratings human body model (JESD22-A114-C), all I/O one at a time while others connected to GND	2000	V
T_{OP}	Operating temperature	-40 to +105	°C

Table 2. Impedances (T_{amb} = 25 °C)

Symbol	Parameter	Value			Unit
		Min.	Typ.	Max.	
Z_{RX}	Rx STM32WL3xxx single-ended impedance	-	Matched to STM32WL3xxx	-	Ω
Z_{TX}	Tx STM32WL3xxx single-ended impedance	-	Matched to STM32WL3xxx	-	Ω
Z_{ANT}	Antenna impedance	-	50	-	Ω

Table 3. Electrical characteristics and RF performances (T_{amb} = 25 °C)

Symbol	Parameter	Test conditions	Value			Unit
			Min.	Typ.	Max.	
f	Frequency range		826	915	958	MHz
IL_{RX}	Rx Insertion Loss $\|S_{21}\|$			1.20	1.50	dB
IL_{TX}	Tx Insertion Loss $\|S_{21}\|$			1.10	1.55	dB
RL_{ANT_RX}	Rx Return Loss $\|S_{11}\|$ on antenna		14	22		dB
RL_{ANT_TX}	Tx Return Loss $\|S_{11}\|$ on antenna		14			dB
Att	Harmonic rejection levels $\|S_{21}\|$	Attenuation at 2f0	25	54		dB
		Attenuation at 3f0	40	43		
		Attenuation at 4f0	48	57		
		Attenuation at 5f0	56	59		
		Attenuation at 6f0	56	62		
		Attenuation at 7f0	47	56		
		Attenuation at 8f0	39	44		
		Attenuation at 9f0	33	38		
		Attenuation at 10f0	27	32		

1.1 RF performances

Figure 1. Transmission in TX mode (dB)

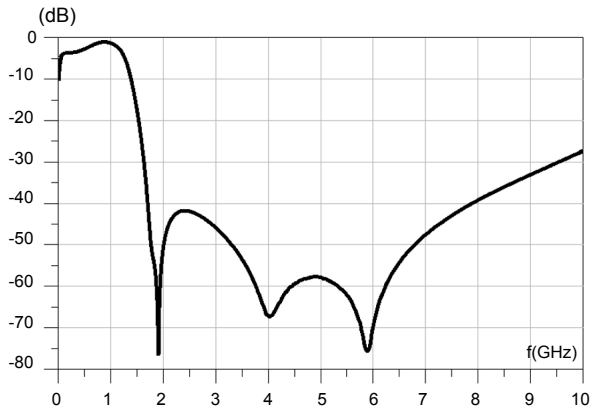

Figure 2. Insertion loss in TX mode (dB)

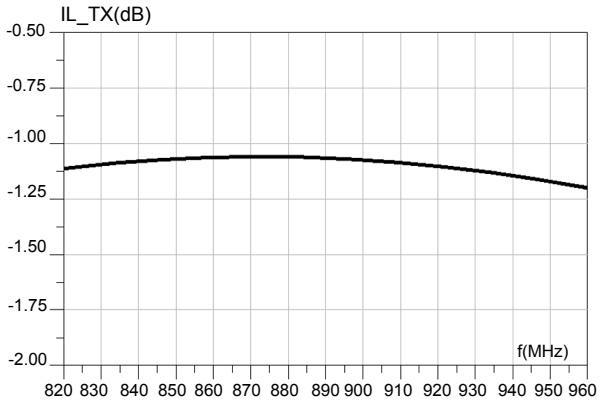

Figure 3. Insertion loss in RX mode (dB)

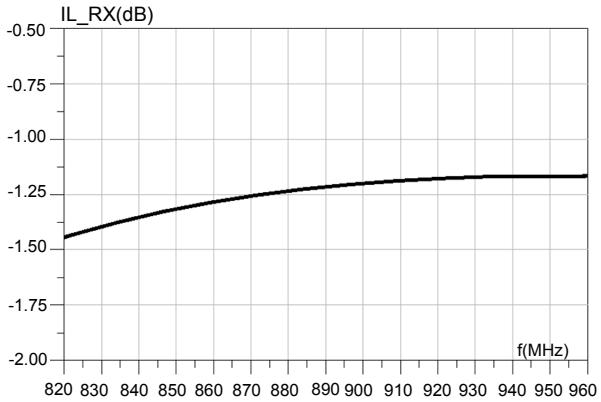

Figure 4. Return loss on antenna in TX mode (dB)

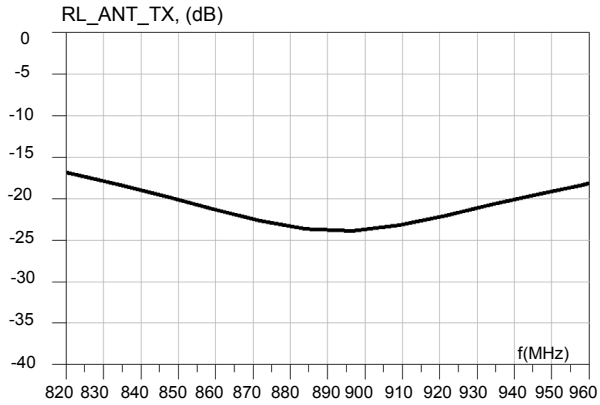

Figure 5. Return loss on antenna in RX mode (dB)

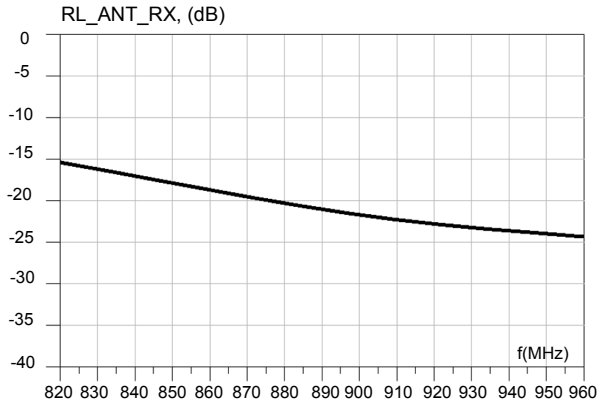

2 Package information

To meet environmental requirements, ST offers these devices in different grades of ECOPACK packages, depending on their level of environmental compliance. ECOPACK specifications, grade definitions, and product status are available at: www.st.com. ECOPACK is an ST trademark.

2.1 CSPG package information

Figure 6. CSPG 5 bumps package outline (bottom view - bumps up)

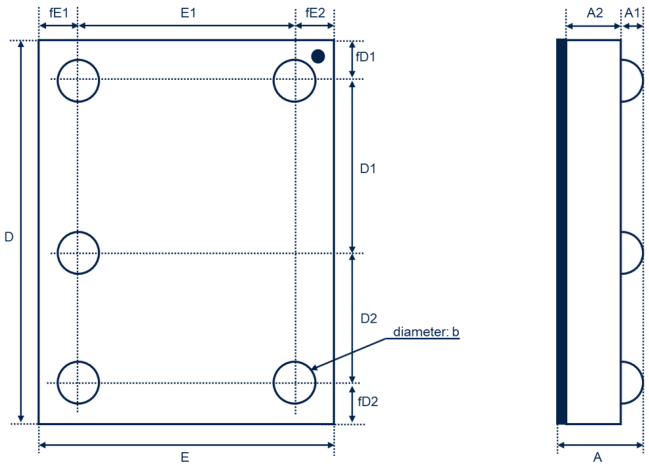

Table 4. CSPG 5 bumps mechanical data

Ref.	Dimensions		
	Millimeters		
	Min.	Typ.	Max.
A	0.580	0.630	0.680
A1	0.180	0.205	0.230
A2	0.380	0.400	0.420
b	0.230	0.255	0.280
D	1.820	1.870	1.920
D1		0.800	
D2		0.600	
E	1.420	1.470	1.520
E1		1.000	
fD1		0.235	
fD2		0.235	
fE1		0.235	
fE2		0.235	

Figure 7. Marking

Figure 8. Top view

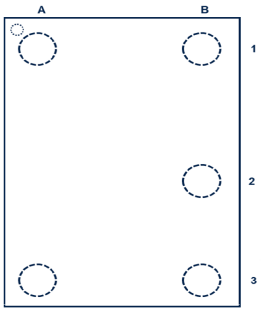

Table 5. Pad description top view (pads down)

Pad ref	Pad name	Description
A1	TX	TX input
A3	RX	RX output
B1	GND_TX	TX ground
B2	ANT	Antenna
B3	GND_RX	RX ground

Figure 9. Tape and reel outline

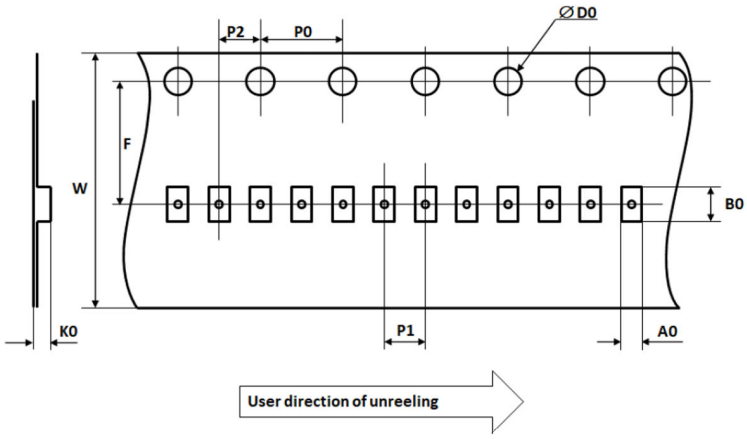

Table 6. Tape and reel mechanical data

Ref	Dimensions (millimeters)		
	Min	Typ	Max
A0	1.06	1.09	1.12
B0	1.66	1.69	1.72
D0	1.40	1.50	1.60
F	3.45	3.50	3.55
K0	0.69	0.72	0.75
P0	3.90	4.00	4.10
P1	1.95	2.00	2.05
P2	1.95	2.00	2.05
W	7.90	8.00	8.30

3 Recommendation on PCB assembly

3.1 Land pattern

Figure 10. **PCB land pattern overview**

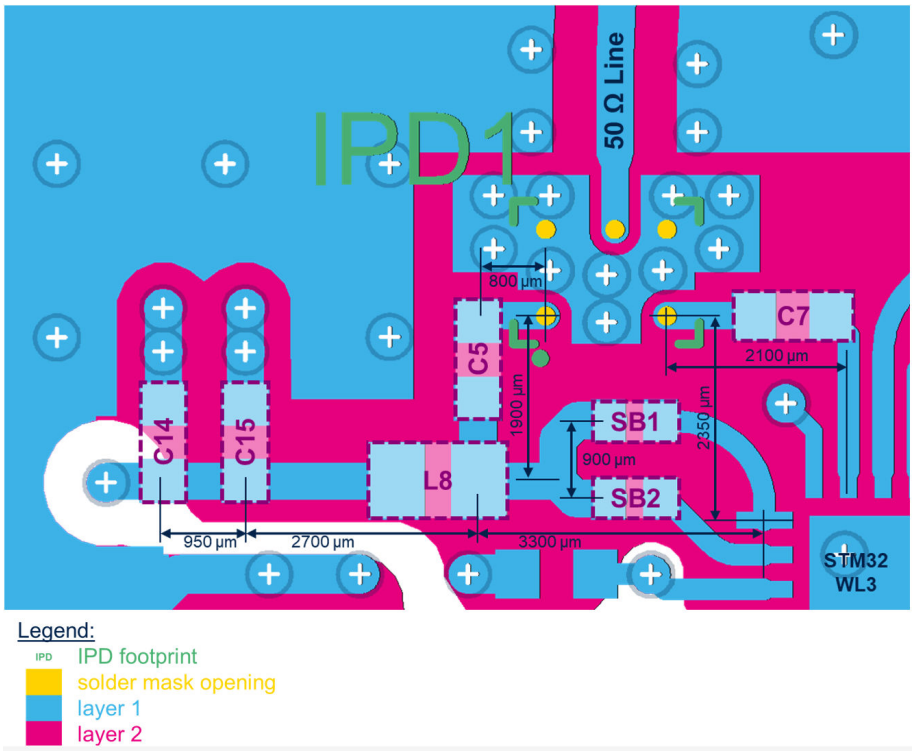

The land pattern on layer 1 must be respected as described in Figure 10.

A ground plane on layer 1 is mandatory under the MLPF, with its shape and definition optimized to achieve the best possible equipotentiality.

The density of vias and drills must be maximized near the MLPF area to ensure optimal RF performance, with at least 10 vias and drills connecting the L2 ground plane to the L1 ground plane below the IPD.

The layout around the IPD must be followed as closely as possible.

Table 7. **Reference BOM for the high band in high power mode: 20 dBm at 915 MHz**

Component	Value	Unit	Description
C5	27	pF	Tx DC block capacitor
C7	100	pF	Rx DC block capacitor
C14	100	pF	Tx decoupling capacitor
C15	100	nF	Tx decoupling capacitor
L8	12	nH	Tx biasing inductor
SB1	0	Ω	TX_HP short
SB2	0	Ω	TX short

Figure 11. PCB land pattern recommendations

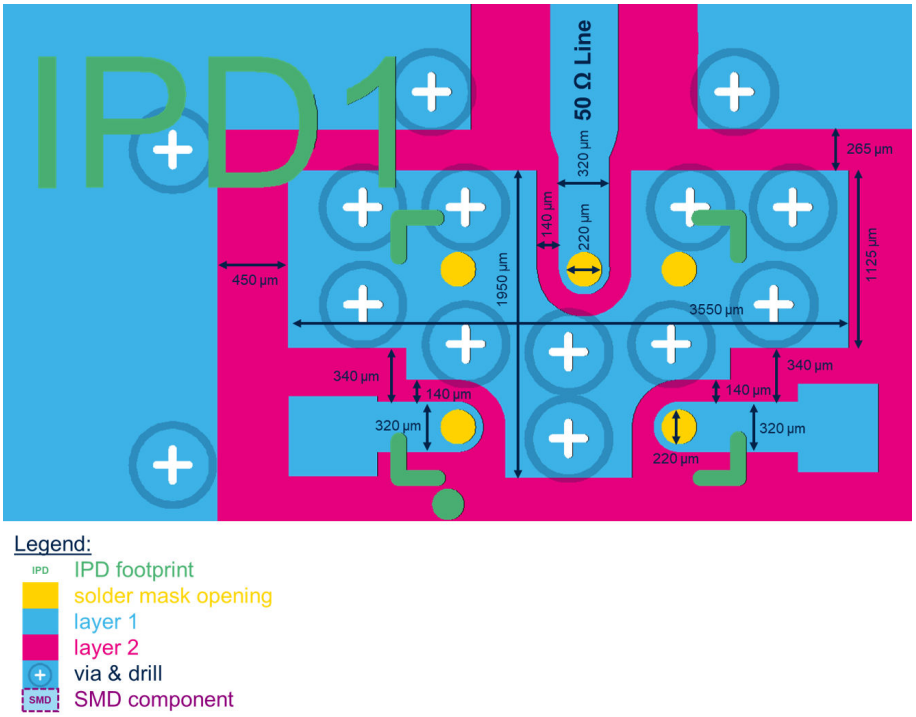

Table 8. Characteristic impedances of RF transmission lines for a 4-layer PCB

RF transmission line	Value	Unit	Description
Antenna	50	Ω	Line between the MLPF ANT pin and the antenna
RX	60	Ω	Line between the MLPF RX pin and the STM32 RX pin
TX // TX_HP	40	Ω	Line between the MLPF TX pin and the STM32 TX + TX_HP pins

The characteristic impedances and lengths of the transmission lines must also be followed as precisely as possible.

Moreover, the physical dimensions of the lines must be adjusted according to the specific PCB stack-up, if it differs from the one presented in the datasheet, to maintain the expected characteristic impedance values.

The dimensions of the lines were calculated considering the ground plane on layer 2.

Figure 12. Stack-up recommendations for a 4-layer PCB

Layer	Name	Material	Thickness	Constant
	Top Overlay			
	Top Solder	Solder Resist	0.010mm	3.5
1	Top Layer	Copper	0.041mm	
	Dielectric 1	Core-028	0.254mm	4.4
2	Signal Layer 1	Copper	0.018mm	
	Dielectric 2	FR4	0.914mm	4.4
3	Signal Layer 2	Copper	0.018mm	
	Dielectric 3	Core-028	0.254mm	4.4
4	Bottom Layer	Copper	0.041mm	
	Bottom Solder	Solder Resist	0.010mm	3.5
	Bottom Overlay			

The PCB stack-up presented above is the one that was used to validate the product. The PCB dimensions should closely follow the recommendations, particularly the thickness of the dielectric between layer 1 and layer 2 (that is, *Dielectric 1* for the presented 4-layer PCB), which must remain within ±30% of the specified values (that is, between 180 and 330 µm for a 4-layer PCB).

The other dimensions can vary without having a major impact on the overall functioning of the product.

3.2 Stencil opening design

Figure 13. Footprint - 3 mils stencil - solder mask defined

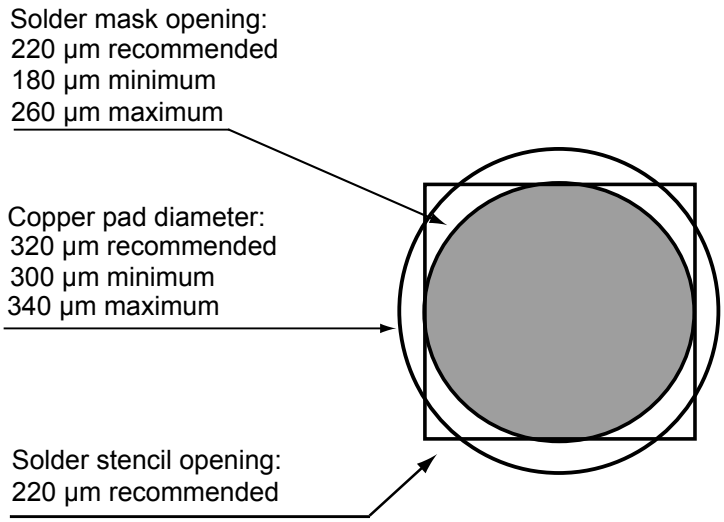

3.3 Solder paste

1. Halide-free flux qualification ROL0 according to ANSI/J-STD-004.
2. “No clean” solder paste is recommended.
3. Offers a high tack force to resist component movement during high speed.
4. Use solder paste with fine particles: powder particle size 20-38 µm.

3.4 Placement

1. Manual positioning is not recommended.
2. It is recommended to use the lead recognition capabilities of the placement system, not the outline centering
3. Standard tolerance of ±0.05 mm is recommended.
4. 1.0 N placement force is recommended. Too much placement force can lead to squeezed out solder paste and cause solder joints to short. Too low placement force can lead to insufficient contact between package and solder paste that could cause open solder joints or badly centered packages.
5. To improve the package placement accuracy, a bottom side optical control should be performed with a high resolution tool.
6. For assembly, a perfect supporting of the PCB (all the more on flexible PCB) is recommended during solder paste printing, pick and place and reflow soldering by using optimized tools.

3.5 PCB design preference

1. To control the solder paste amount, the closed via is recommended instead of open vias.
2. The position of tracks and open vias in the solder area should be well balanced. A symmetrical layout is recommended, to avoid any tilt phenomena caused by asymmetrical solder paste due to solder flow away.

3.6 Reflow profile

Figure 14. ST ECOPACK recommended soldering reflow profile for PCB mounting

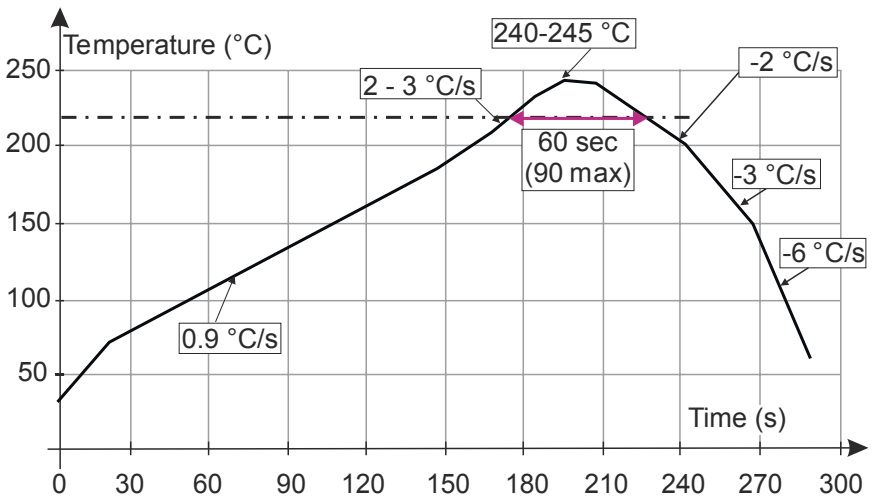

Note: Minimize air convection currents in the reflow oven to avoid component movement.

Note: More information is available in the application note:

- *AN2348 Flip-Chip: “Package description and recommendations for use”*

4 Ordering information

Table 9. Ordering information

Order code	Marking	Package	Weight	Base qty.	Delivery mode
MLPF-WL-02D3	UJ	CSPG	2.782 mg	5000	Tape and reel (7")

Revision history

Table 10. Document revision history

Date	Revision	Changes
18-Oct-2024	1	Initial release.
19-Nov-2024	2	Updated Section Description.
25-Jun-2025	3	Updated Table 1, and Section 3.1: Land pattern.

IMPORTANT NOTICE – READ CAREFULLY

STMicroelectronics NV and its subsidiaries (“ST”) reserve the right to make changes, corrections, enhancements, modifications, and improvements to ST products and/or to this document at any time without notice. Purchasers should obtain the latest relevant information on ST products before placing orders. ST products are sold pursuant to ST’s terms and conditions of sale in place at the time of order acknowledgment.

Purchasers are solely responsible for the choice, selection, and use of ST products and ST assumes no liability for application assistance or the design of purchasers’ products.

No license, express or implied, to any intellectual property right is granted by ST herein.

Resale of ST products with provisions different from the information set forth herein shall void any warranty granted by ST for such product.

ST and the ST logo are trademarks of ST. For additional information about ST trademarks, refer to www.st.com/trademarks. All other product or service names are the property of their respective owners.

Information in this document supersedes and replaces information previously supplied in any prior versions of this document.

© 2025 STMicroelectronics – All rights reserved