FXPS7250A4S

Datasheet

Analog absolute pressure sensor, 20 kPa to 250 kPa

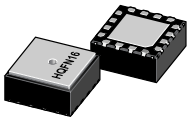

Features

- Absolute pressure range: 20 kPa to 250 kPa
- Operating temperature range: –40 °C to 130 °C
- Analog output for monitoring of the absolute pressure signal
- Pressure transducer and digital signal processor (DSP)
- Capacitance to voltage converter with anti-aliasing filter
- Sigma delta ADC plus sinc filter
- 1000 Hz low-pass filter for absolute pressure
- Lead-free, 16-pin HQFN, 4 mm x 4 mm x 1.98 mm package

Applications

Automotive

- Manifold air pressure (MAP)
- Small engine control
- Battery pressure monitoring
- Liquid propane gas (LPG) or compressed natural gas (CNG) engine management

Industrial

- Compressed air
- Manufacturing line control
- Gas metering
- Weather stations

Description

The FXPS7250A4S high-performance, high-precision absolute pressure sensor consists of a compact capacitive micro-electro-mechanical systems (MEMS) device coupled with a digital integrated circuit (IC) producing a fully calibrated analog output.

This sensor is ideal for many automotive applications such as manifold air pressure (MAP), comfort seating, and other applications requiring operating absolute pressure ranges up to 250 kPa.

The sensing element is based on ST's high precision capacitive pressure cell technology. The architecture benefits from redundant pressure transducers as an expanded quality measure. It delivers highly accurate ratiometric analog readings of absolute pressure while operating from either a 3.3 V or 5.0 V power supply.

The sensor operates over a pressure range of 20 kPa to 250 kPa and over a wide temperature range of –40 ºC to 130 ºC.

The sensor comes in an industry-leading 4 mm x 4 mm x 1.98 mm, restriction of hazardous substances (RoHS) compliant, high-power quad flat no-lead (HQFN) package [1] suitable for small printed circuit board (PCB) integration. Its AEC-Q100 [2] compliance, high accuracy, reliable performance, and high media resistivity make it ideal for use in automotive, industrial, and consumer applications.

1 Ordering information

Table 1. Package information

Type number	Package	
	Name	Description
FXPS7250A4S	HQFN16	HQFN16, plastic, thermal enhanced quad flat pack; no leads; 16 terminals; 0.8 mm pitch; 4 mm x 4 mm x 1.98 mm body

Ordering options

Table 2. Ordering options

Device	Range (kPa)	Packing	Temperature range
FXPS7250A4ST1	20 kPa to 250 kPa	Packing Tape and Reel	–40 °C to 130 °C

2 Block diagram

Figure 1. Block diagram of FXPS7250A4S

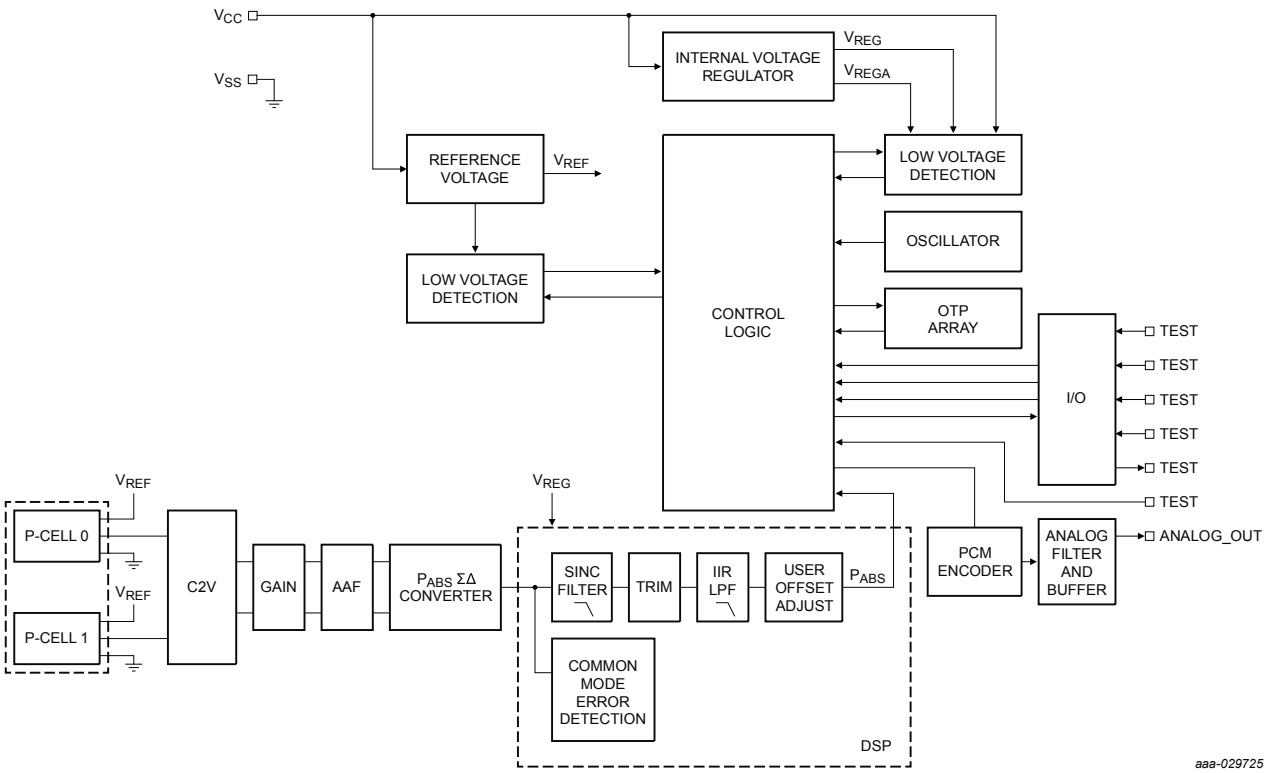

3 Pinning information

3.1 Pinning

Figure 2. Pin configuration for 16-pin HQFN

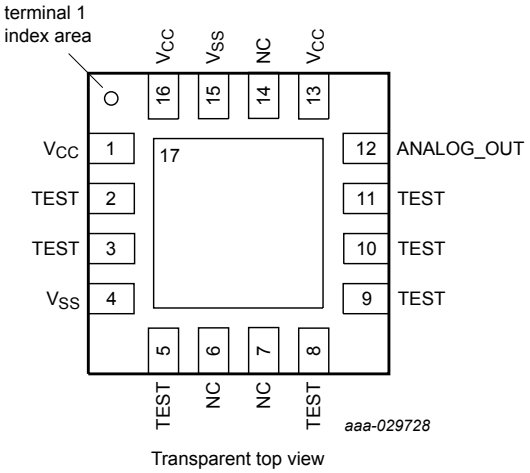

3.2 Pin description

Table 3. Pin description

Pin	Pin name	Description
2, 8, 9, 10	TEST	Pins 2, 8, 9, and 10 are test pins and must be left unterminated in the application.
3	TEST	Pin 3 is required to be tied to V_{CC} for device operation.
4, 15	V_{SS}	Pins 4 and 15 are the supply return nodes and are connected internally to the die attach pad (pin 17).
5, 11	TEST	Pins 5 and 11 are test pins and must be tied to V_{SS}.
6, 7, 14	NC	Pins 6, 7 and 14 are not internally connected and can be left unconnected in the application.
12	ANALOG_OUT	Pin 12 provides a ratiometric analog output proportional to the absolute pressure sensor data.
1, 13, 16	V_{CC}	Pins 1, 13 and 16 supply power to the device. An external capacitor must be connected between these pins and V_{SS}, as shown in the application diagram.
17	PAD	Pin 17 is the die attach flag and must be connected to V_{SS}.

4 Functional description

4.1 Voltage regulators

The device derives its internal supply voltage from the V_{CC} and V_{SS} pins. An external filter capacitor is required for V_{CC}, as shown in Figure 12. Application diagram of FXPS7250A4 .

A reference generator provides a reference voltage for the ΣΔ converter.

Figure 3. Voltage regulation and monitoring

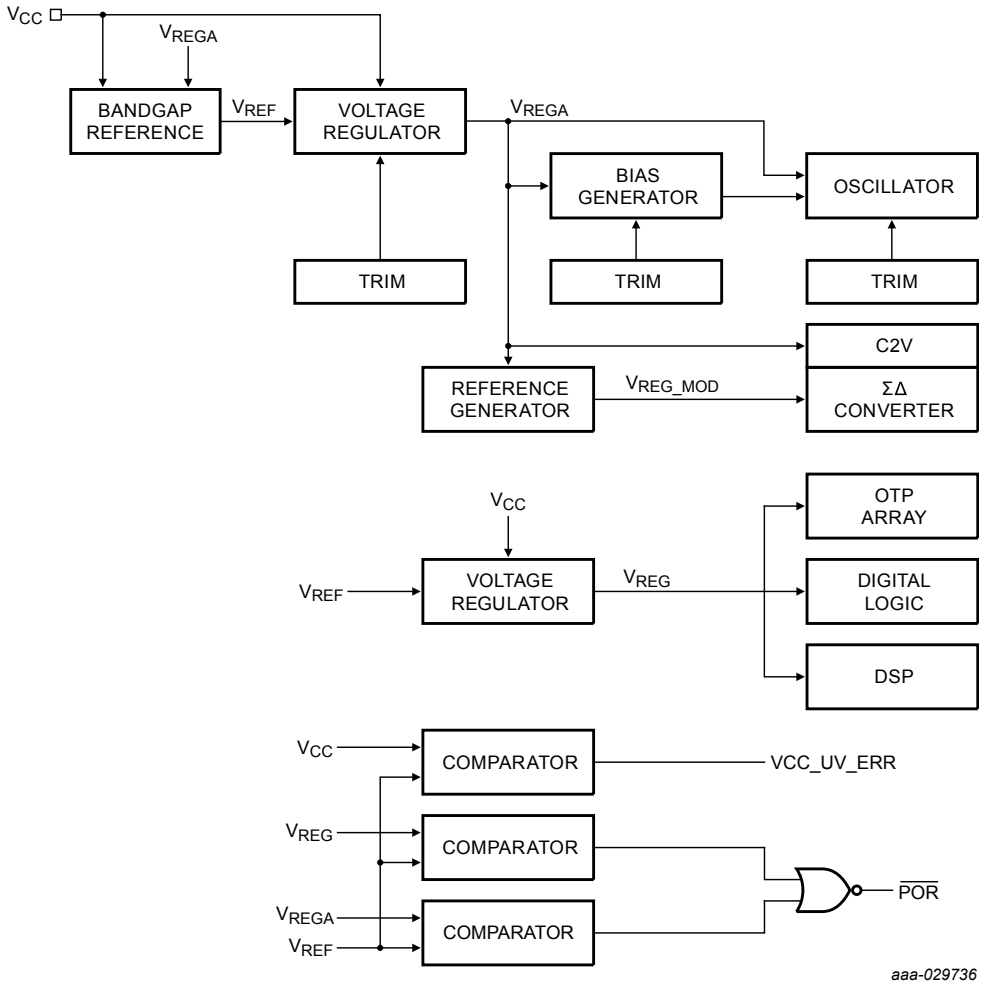

4.2 Pressure sensor signal path

4.2.1 ΣΔ converter

A second order sigma delta modulator converts the voltage from the analog front end to a data stream that is input to the DSP. A simplified block diagram is shown in Figure 4. ΣΔ converter block diagram.

Figure 4. ΣΔ converter block diagram

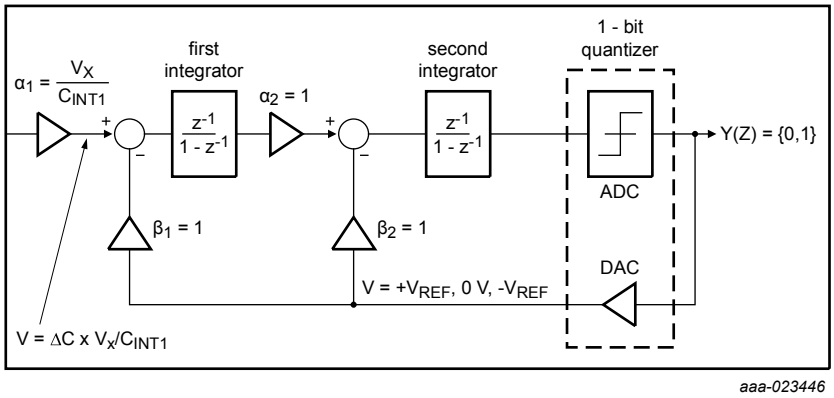

The sigma delta modulator operates at a frequency of 1 MHz, with the transfer function in Eq. (1).

$$H(Z) = \frac{\alpha_1}{Z^2} \tag{1}$$

4.2.2 Digital signal processor (DSP)

A DSP is used to perform signal filtering and compensation. A diagram illustrating the signal processing flow within the DSP is shown in Figure 5. Signal chain diagram.

Figure 5. Signal chain diagram

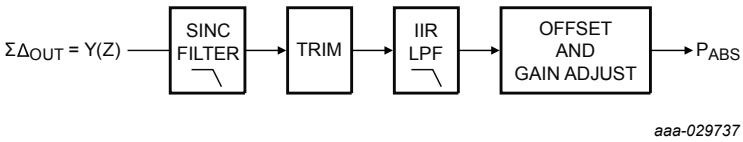

4.2.2.1 Decimation sinc filter

In Eq. (2), the output of the ΣΔ modulator is decimated and converted to a parallel value by two third-order sinc filters; the first with a decimation ratio of 24 and the second with a decimation ratio of 4.

$$H(Z) = \left(\frac{1}{24^3}\right) \times \left(\frac{1 - Z^{-24}}{1 - Z^{-1}}\right)^3 \quad H(Z) = \left(\frac{1}{4^3}\right) \times \left(\frac{1 - Z^{-4}}{1 - Z^{-1}}\right)^3 \tag{2}$$

Figure 6. Sinc filter response

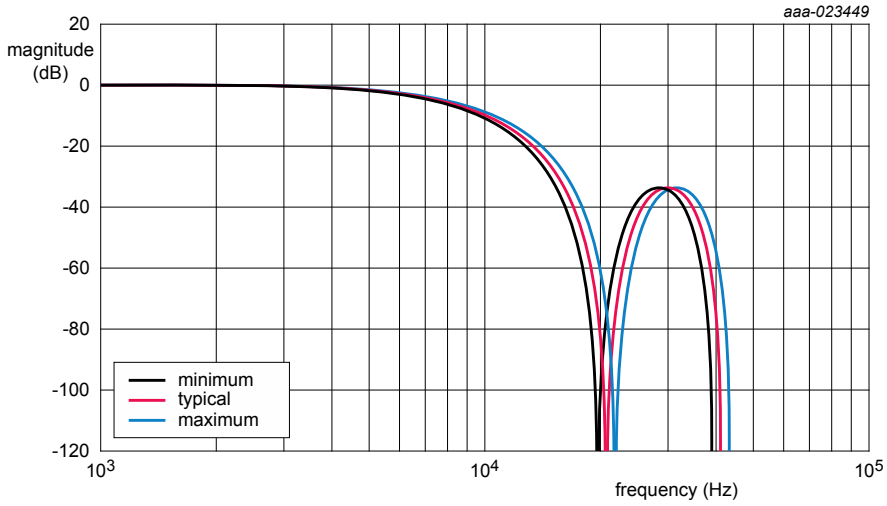

4.2.2.2 *Signal trim and compensation*

The device includes digital trim to compensate for sensor offset, sensitivity, and nonlinearity over temperature.

4.2.2.3 *Low-pass filter*

Data from the sinc filter is processed by an infinite impulse response (IIR) low-pass filter with the transfer function and coefficients shown in Eq. (3).

$$H(Z) = a_0 \times \frac{(n_{11} \times z^0) + (n_{12} \times z^{-1}) + (n_{13} \times z^{-2})}{(d_{11} \times z^0) + (d_{12} \times z^{-1}) + (d_{13} \times z^{-2})} \times \frac{(n_{21} \times z^0) + (n_{22} \times z^{-1}) + (n_{23} \times z^{-2})}{(d_{21} \times z^0) + (d_{22} \times z^{-1}) + (d_{23} \times z^{-2})} \quad (3)$$

Table 4. IIR low pass filter coefficients

Filter number	Typical –3 dB frequency	Filter order	Filter coefficients (24 bit)				Group delay (µs)	Typical attenuation @ 1000 Hz (dB)
1	800 Hz	4	a_0	0.088642612609670	—	—	418	4.95
			n_{11}	0.029638050039039	d_{11}	1		
			n_{12}	0.087543281056143	d_{12}	–1.422792640957290		
			n_{13}	0.029695285913601	d_{13}	0.511435253566960		
			n_{21}	0.250241278804809	d_{21}	1		
			n_{22}	0.499999767379068	d_{22}	–1.503329908017845		
			n_{23}	0.249758953816089	d_{23}	0.621996524706640		
2	1000 Hz	4	a_0	0.129604264748411	—	—	333	2.99
			n_{11}	0.043719804402508	d_{11}	1		
			n_{12}	0.087543281056143	d_{12}	–1.300502656562698		
			n_{13}	0.043823599710731	d_{13}	0.430106921311110		
			n_{21}	0.250296586927511	d_{21}	1		
			n_{22}	0.499999648540934	d_{22}	–1.379959571988366		
			n_{23}	0.249703764531484	d_{23}	0.555046257157745		

Figure 7. 800 Hz, 4-pole, low-pass filter response

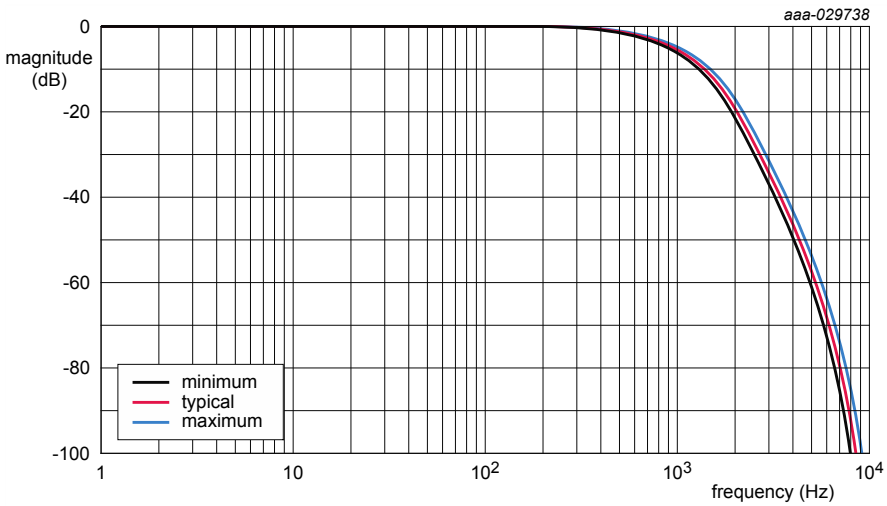

Figure 8. 800 Hz, 4-pole output signal delay

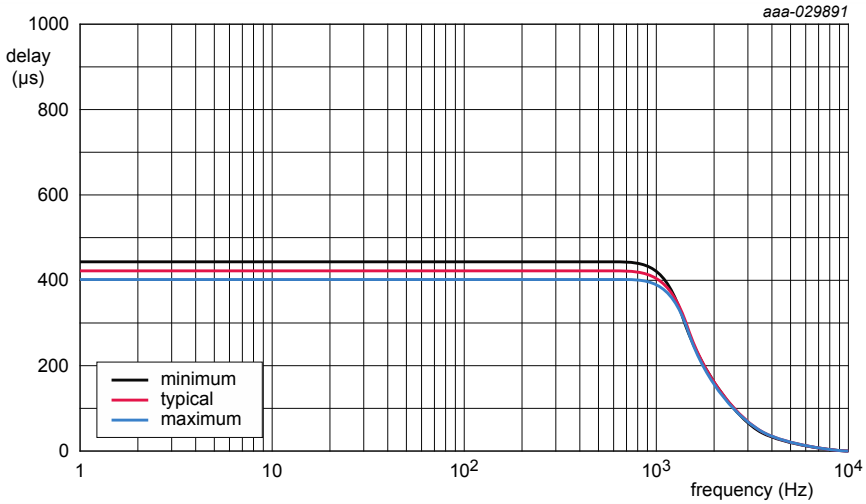

Figure 9. 1000 Hz, 4-pole, low-pass filter response

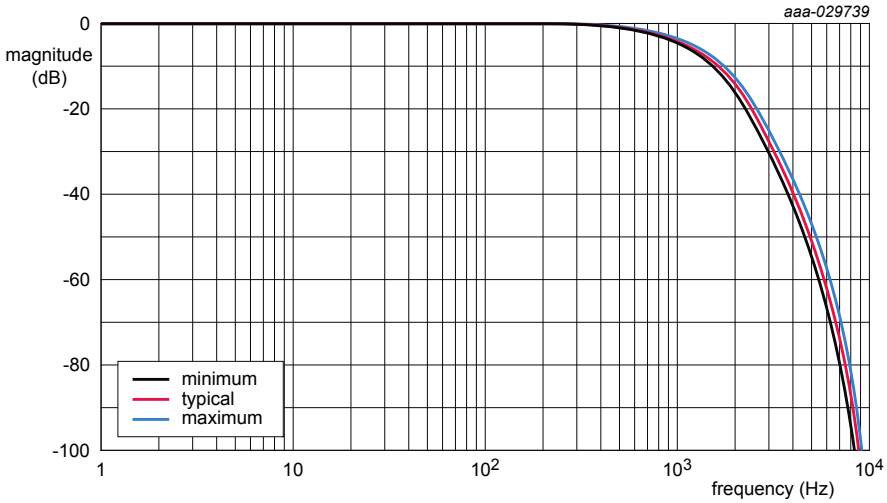

Figure 10. **1000 Hz, 4-pole output signal delay**

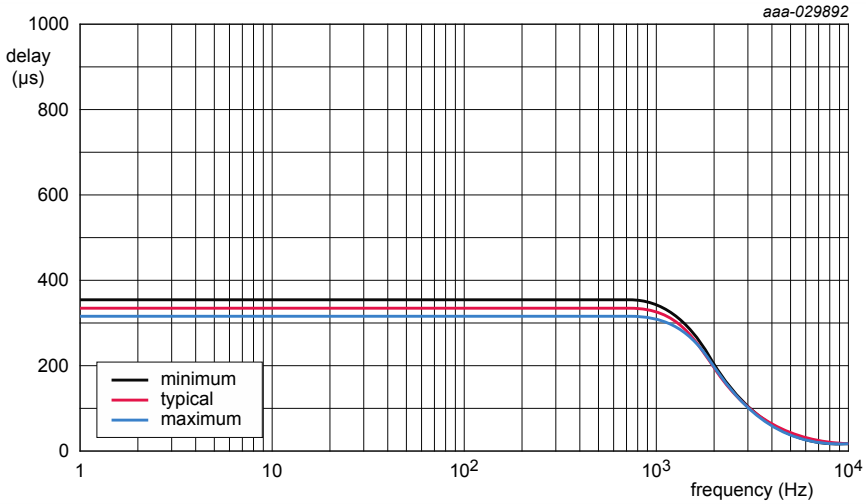

4.3 Analog output function

4.3.1 Analog output signal chain

The device provides an analog output ratiometric to the supply voltage. The analog output is enabled by default. Selecting the analog output enables the following functions:

- The non-interpolated P_{ABS} sensor data output is saturated to 10 bits and converted to an unsigned value.
- The 10-bit sensor value is input into a summer clocked at 10 MHz.
- The carry from the summer circuit generates a PCM output.
- The PCM signal is filtered by a 2-pole active low pass filter to generate an analog signal.

4.3.2 Analog output transfer function

The FXPS7250A4S device provides an analog output voltage ratiometric to the supply voltage.

If using a supply voltage other than 5 V, the general form of the transfer function should be applied as described in equation Eq. (4):

$$Pressure_kPa = 10 + 250 \times (A_{OUT}/V_{CC}) \quad (4)$$

In addition, the absolute pressure analog offset, P_{OFF} and output voltage span, V_{FSS}, then becomes a ratio of their magnitude by applying the ratio of (V_{CC} / 5 V) to each of these parameters.

There can be slight variations in the P_{OFF} and V_{FSS} based on the temperature. The minimum and maximum variation of P_{OFF} and V_{FSS} can be assessed by applying the same ratio (V_{CC} / 5 V) to both of these parameters and then applying the error percentages to obtain these variations if needed.

The analog output transfer function for a 5.0 V supply is as shown in Figure 11. Analog output transfer function.

Figure 11. Analog output transfer function

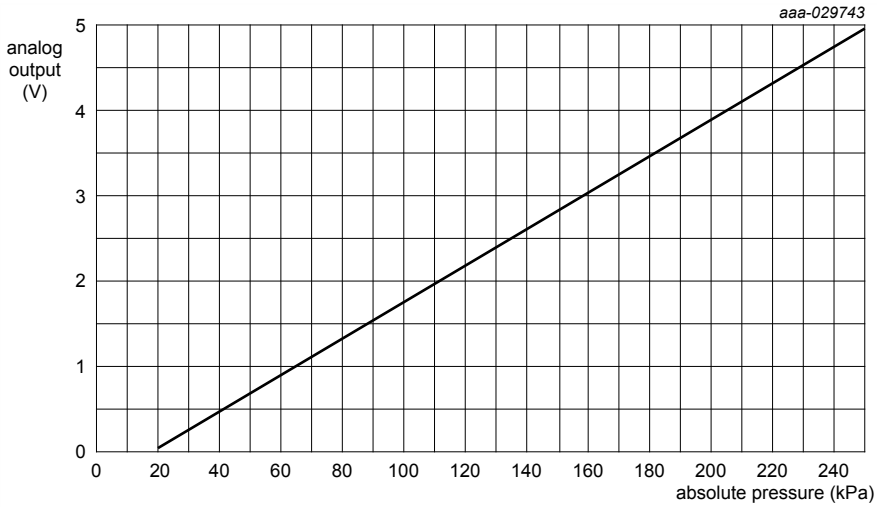

5 Maximum ratings

Absolute maximum ratings are the limits that the device can be exposed to without permanently damaging it. Absolute maximum ratings are stress ratings only; functional operation at these ratings is not guaranteed. Exposure to absolute maximum ratings conditions for extended periods might affect device reliability.

This device contains circuitry to protect against damage due to high static voltage or electrical fields. ST advises that normal precautions be taken to avoid application of any voltages higher than maximum-rated voltages to this high-impedance circuit.

Table 5. Maximum ratings

Symbol	Parameter	Conditions		Min	Max	Unit
V_{CCMAX}	Supply Voltage	V_{CC}, V_{CCIO}	(1)	—	+6.0	V
V_{IOMAX}	Input/Output Max on pins	ANALOG_OUT TESTx	(1)	–0.3	V_{CC} + 0.3	V
h_{DROP}	Drop shock	To concrete,tile or steel surface, 10 drops, any orientation	(2)	—	1.2	m
T_{stg}	Temperature range	Storage	(2)	–40	+130	°C
T_J		Junction	(3)	–40	+150	°C
P_{MAX}	Maximum absolute pressure	Continuous	(3)	—	300	kPa
P_{BURST}		Burst (tested at 100 ms)	(2)	—	750	kPa
P_{MIN}	Minimum absolute pressure	Continuous	(1)	—	20	kPa
f_{SEAL}	Pressure sealing force	Applied to top face of package	(1)	—	10	N
θ_{JA}	Thermal resistance		(4)	—	120	°C/W
ESD and latch-up protection characteristics						
V_{ESD}	Electrostatic discharge (per AEC-Q100, Rev H)	Human body model (HBM)	(2)	–2000	2000	V
V_{ESD}		Charge device model (CDM)	(2) (5)	–500	500	V

1. *Parameter verified by parametric and functional validation.*
2. *Parameter verified by qualification testing (Per AEC-Q100 Rev H or per ST specification).*
3. *Functionality verified by modeling, simulation and/or design verification.*
4. *Thermal resistance provided with device mounted to a two-layer, 1.6 mm FR-4 PCB as documented in AN1902 [1] with one signal layer and one ground layer.*
5. *CDM tested at ±750 V for corner pins and ±500 V for all other pins.*

Caution

This device is sensitive to mechanical shock. Improper handling can cause permanent damage to the part.

msc896

Caution

This is an ESD sensitive device. Improper handling can cause permanent damage to the part.

6 Operating range

Table 6. Electrical characteristics — supply and I/O

$V_{CC_min} \leq (V_{CC} - V_{SS}) \leq V_{CC_max}$, $T_L \leq T_A \leq T_H$, $\Delta T \leq 25$ °C/min, unless otherwise specified.

Symbol	Parameter	Conditions	Min	Max	Units
V_{CC}	Supply voltage	Measured at V_{CC} (1)	3.10	5.25	V
T_A	Operating temperature range	V_{CC} = 5.0 V, unless otherwise stated. Production tested operating temperature range (1)	T_L –40	T_H +130	°C
T_A		Guaranteed operating temperature range (1)	–40	+130	°C
V_{CC_RAMP}	Supply power on ramp rate	(2) (3)	0.00001	10	V/µs

1. *Parameter tested at final test.*
2. *Functionality verified by modeling, simulation and/or design verification.*
3. *Parameter verified by parametric and functional validation.*

7 Static characteristics

Table 7. Static characteristics

$V_{CC_min} \leq (V_{CC} - V_{SS}) \leq V_{CC_max}$, $T_L \leq T_A \leq T_H$, $\Delta T \leq 25$ °C/min, unless otherwise specified.

Symbol	Parameter	Condition		Min	Typ	Max	Units
Supply and I/O							
I_q	Supply current	V_{CC} = 5.0 V	(1)	—	—	8.0	mA
Temperaturesensor signal chain							
V_{OH_ANA}	Output high voltage	ANALOG_OUT, I_{Load} = –100 µA	(1)	Vcc – 0.2	—	—	V
V_{OL_ANA}	Output low voltage	ANALOG_OUT, I_{Load} = 100 µA	(1)	—	—	0.2	V
V_{OUT_3dB}	Analog output low-pass filter frequency typical value	–3dB, 2-pole	(2)	8	—	20	kHz
V_{OUT_3dBTol}	Analog output low-pass filter frequency typical tolerance	–3dB, 2-pole	(2)	–5	—	5	%
Absolute pressure sensor signal chain							
P_{ABS}	Absolute pressure range		(1)(3)	20	—	250	kPa
P_{SENS}	Absolute pressure output sensitivity	V_{CC}= 5.0 V. Tested at P_A = 140 kPa ± 10 % and 200 kPa ± 10 %	(2)	—	20	—	mV/ kPa
P_{ACC_HiT}	Absolute pressure accuracy	V_{CC} = 5.0 V. 85°C < TA≤130 °C	(4)	-3	—	3	%FSS
P_{ACC_Typ}	Absolute pressure accuracy	V_{CC} = 5.0 V. 0°C ≤ T_A≤85 °C	(4)	–2	—	+2	%FSS
P_{ACC_LoT}	Absolute pressure accuracy	V_{CC} = 5.0 V. –40°C ≤ T_A<0 °C	(4)	–3	—	+3	%FSS
P_{OFF}	Absolute pressure analog offset	At pressure span extremes V_{CC} = 5.0 V.	(4)	—	0.2	—	V
V_{FSS}	Output voltage span	At pressure span extremes V_{CC} = 5.0 V.	(5)	—	4.6	—	V

1. *Parameter verified by pass/fail testing at final test.*
2. *Functionality verified by modeling, simulation and/or design verification.*
3. *Parameter verified by characterization.*
4. *Parameter tested at final test.*
5. *Parameter verified by functional evaluation.*

8 Dynamic characteristics

Table 8. Dynamic characteristics

$V_{CC_min} \leq (V_{CC} - V_{SS}) \leq V_{CC_max}$, $T_L \leq T_A \leq T_H$, $\Delta T \leq 25$ °C/min, unless otherwise specified.

Symbol	Parameter	Condition	Min	Typ	Max	Units
Signal chain						
$t_{SigChain}$	P_{ABS} low-pass filter	Signal chain sample time (1)	—	48	—	µs
f_{c0}		Cutoff frequency, filter option #0, 4-pole (1)(2)	—	800	—	Hz
f_{c1}		Cutoff frequency, filter option #1, 4-pole (1)(2)	—	1000	—	Hz
$t_{SigDelay}$	Signal delay (sinc filter to output delay, excluding the P_{ABS} LPF)	(1)	—	—	128	µs
$t_{Delay_DataValid}$	Supply recovery	V_{CC} to sensor data valid	300	—	—	ms
$f_{Package}$	Package resonance frequency	(1)	27.1	—	—	kHz

1. *Functionality verified by modeling, simulation and/or design verification.*
2. *Parameter verified by functional evaluation.*

9 Media compatibility—pressure sensors only

For more information regarding media compatibility information, contact your local sales representative.

Note: *The devices contain a gel that protects the pressure transducer and its inter-die connection wires from corrosion, which might otherwise result in catastrophic failure modes. Direct exposure to materials with the same or nearly-the-same solubility can potentially result in a corruption of the protective gel. A corruption can be less than catastrophic in nature, however may result in an offset of the pressure measurement from its factory calibrated value. An offset can potentially be larger than the allowed tolerances published in this data sheet.*

Further, ST does not recommend direct exposure to strong acid or strong base compounds as they can potentially result in a similar corruption as described above, or may result in a dissolution of the protective gel and/or the metal lid adhesive and/or the plastic device body. Such a dissolution can be catastrophic in nature, damaging the transducer surfaces and/or internal wire bonds and/or the control die surfaces. A potential dissolution may result in a similar offset, or cause the device to indicate overflow/underflow status, or may cause the device to cease operating in the worst case.

For a list of compounds known to generate out-of-tolerance offsets and/or catastrophic device failure, contact your local ST sales office.

10 Application information

Note: *A gel is used to provide media protection against corrosive elements which may otherwise damage metal bond wires and/or IC surfaces. Highly pressurized gas molecules may permeate through the gel and then occupy boundaries between material surfaces within the sensor package. When decompression occurs, the gas molecules may collect, form bubbles and possibly result in delamination of the gel from the material it protects. If a bubble is located on the pressure transducer surface or on the bond wires, the sensor measurement may shift from its calibrated transfer function. In some cases, these temporary shifts could be outside the tolerances listed in the data sheet. In rare cases, the bubble may bend the bond wires and result in a permanent shift.*

Figure 12. Application diagram of FXPS7250A4

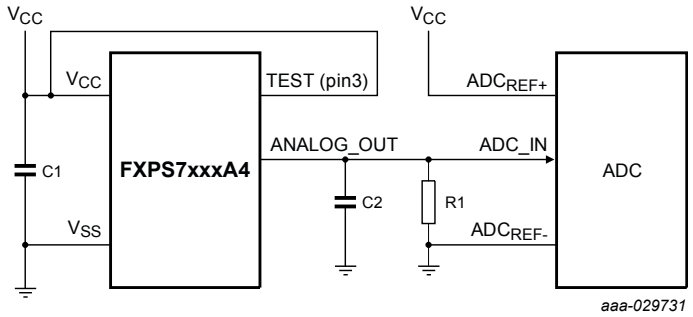

Table 9. External component recommendations

Name	Type	Description	Purpose
C1	Ceramic	0.1 µF, 10 %, 10 V minimum, X7R	V_{CC} power supply decoupling
C2	Ceramic	47 pF, 10 %, 10 V minimum, X7R	Analog output filtering
R1	General purpose	51 kΩ, 5 %, 200 PPM	Analog output pull-down resistor

11 Package outline

Note: Trademark property of NXP, used by STMicroelectronics under license

Figure 13. Package outline HQFN

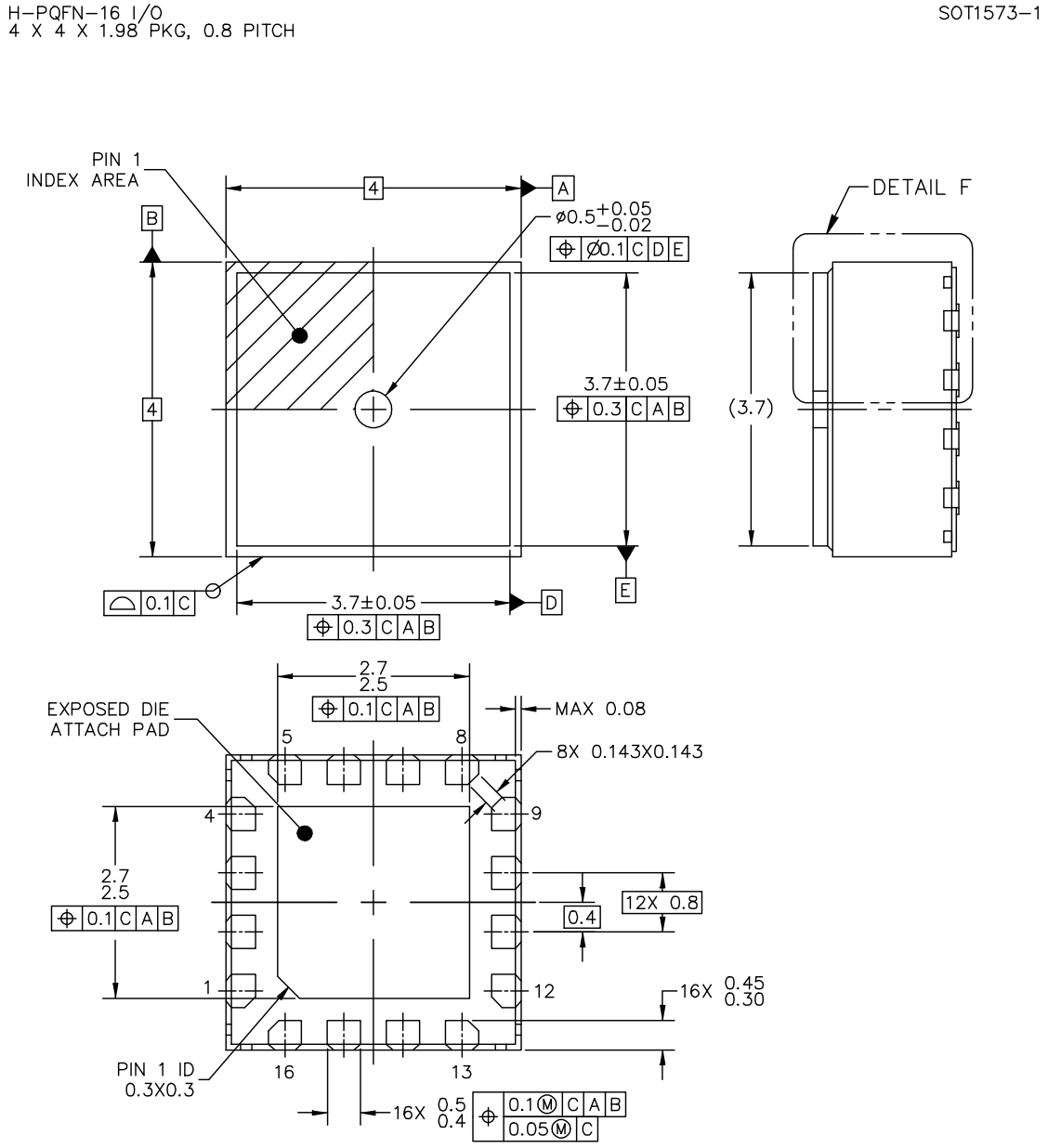

Figure 14. Package outline detail HQFN

H–PQFN–16 I/O
4 X 4 X 1.98 PKG, 0.8 PITCH

SOT1573–1

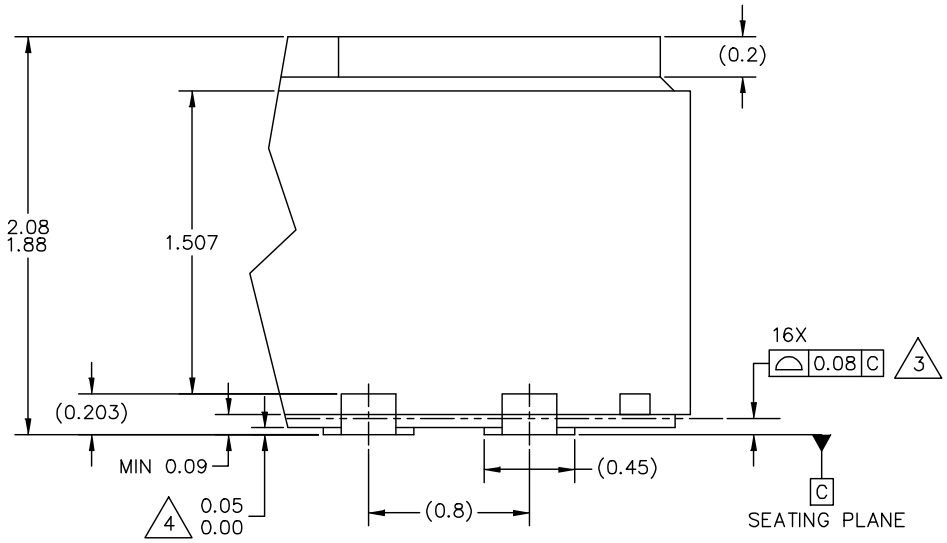

DETAIL F
VIEW ROTATED 90°CW

RELEASED FOR EXTERNAL ASSEMBLY ONLY. THIS DESIGN ONLY MEETS EXTERNAL DESIGN AND ASSEMBLY RULES. MUST BE REVIEWED AND UPDATED BEFORE BEING ASSEMBLED INTERNALLY

© NXP B.V. ALL RIGHTS RESERVED

DATE: 19 JUN 2020

MECHANICAL OUTLINE PRINT VERSION NOT TO SCALE	STANDARD: NON JEDEC	DRAWING NUMBER: 98ASA00893D	REVISION: C	

Figure 15. Package outline note HQFN

H-PQFN-16 I/O
4 X 4 X 1.98 PKG, 0.8 PITCH

SOT1573-1

NOTES:

1. ALL DIMENSIONS ARE IN MILLIMETERS.
2. DIMENSIONING AND TOLERANCING PER ASME Y14.5M-1994.
3. COPLANARITY APPLIES TO LEADS AND DIE ATTACH PAD.
4. DIMENSION APPLIES ONLY FOR TERMINALS.
5. MIN METAL GAP SHOULD BE 0.2 MM.

© NXP B.V. ALL RIGHTS RESERVED

DATE: 19 JUN 2020

MECHANICAL OUTLINE PRINT VERSION NOT TO SCALE	STANDARD: NON JEDEC	DRAWING NUMBER: 98ASA00893D	REVISION: C	

12 Soldering

Note: Trademark property of NXP, used by STMicroelectronics under license

Figure 16. PCB design guidelines - Solder mask opening pattern

H–PQFN–16 I/O
4 X 4 X 1.98 PKG, 0.8 PITCH

SOT1573–1

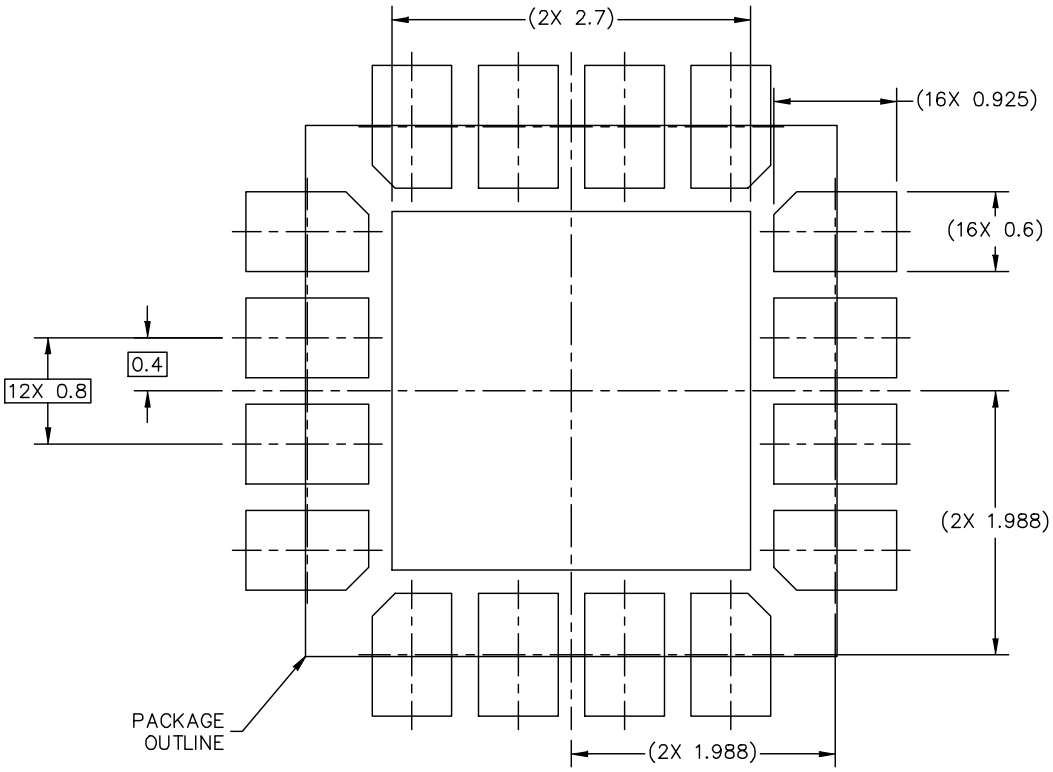

PCB DESIGN GUIDELINES – SOLDER MASK OPENING PATTERN

THIS SHEET SERVES ONLY AS A GUIDELINE TO HELP DEVELOP A USER SPECIFIC SOLUTION. DEVELOPMENT EFFORT WILL STILL BE REQUIRED BY END USERS TO OPTIMIZE PCB MOUNTING PROCESSES AND BOARD DESIGN IN ORDER TO MEET INDIVIDUAL/SPECIFIC REQUIREMENTS.

© NXP B.V. ALL RIGHTS RESERVED

DATE: 19 JUN 2020

MECHANICAL OUTLINE PRINT VERSION NOT TO SCALE	STANDARD: NON JEDEC	DRAWING NUMBER: 98ASA00893D	REVISION: C	

Figure 17. PCB design guidelines - I/O pads and solderable area

H-PQFN-16 I/O
4 X 4 X 1.98 PKG, 0.8 PITCH

SOT1573-1

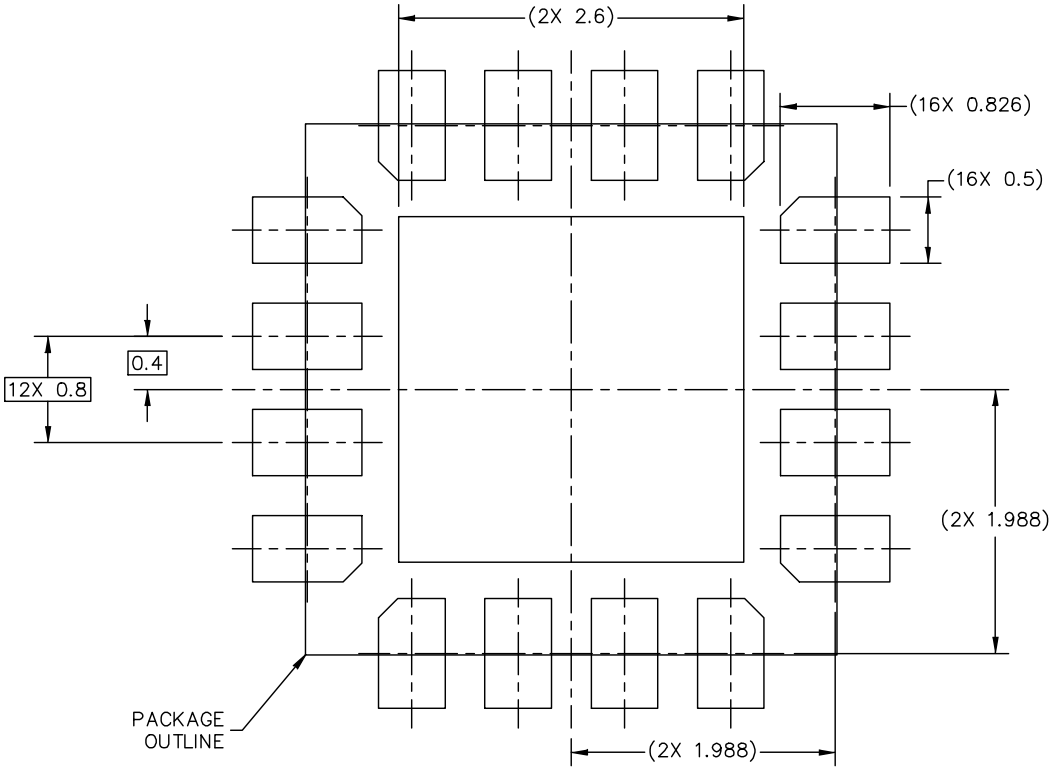

PCB DESIGN GUIDELINES – I/O PADS AND SOLDERABLE AREA

THIS SHEET SERVES ONLY AS A GUIDELINE TO HELP DEVELOP A USER SPECIFIC SOLUTION. DEVELOPMENT EFFORT WILL STILL BE REQUIRED BY END USERS TO OPTIMIZE PCB MOUNTING PROCESSES AND BOARD DESIGN IN ORDER TO MEET INDIVIDUAL/SPECIFIC REQUIREMENTS.

© NXP B.V. ALL RIGHTS RESERVED

DATE: 19 JUN 2020

MECHANICAL OUTLINE PRINT VERSION NOT TO SCALE	STANDARD: NON JEDEC	DRAWING NUMBER: 98ASA00893D	REVISION: C	

Figure 18. PCB design guidelines - Solder paste stencil

H–PQFN–16 I/O
4 X 4 X 1.98 PKG, 0.8 PITCH

SOT1573–1

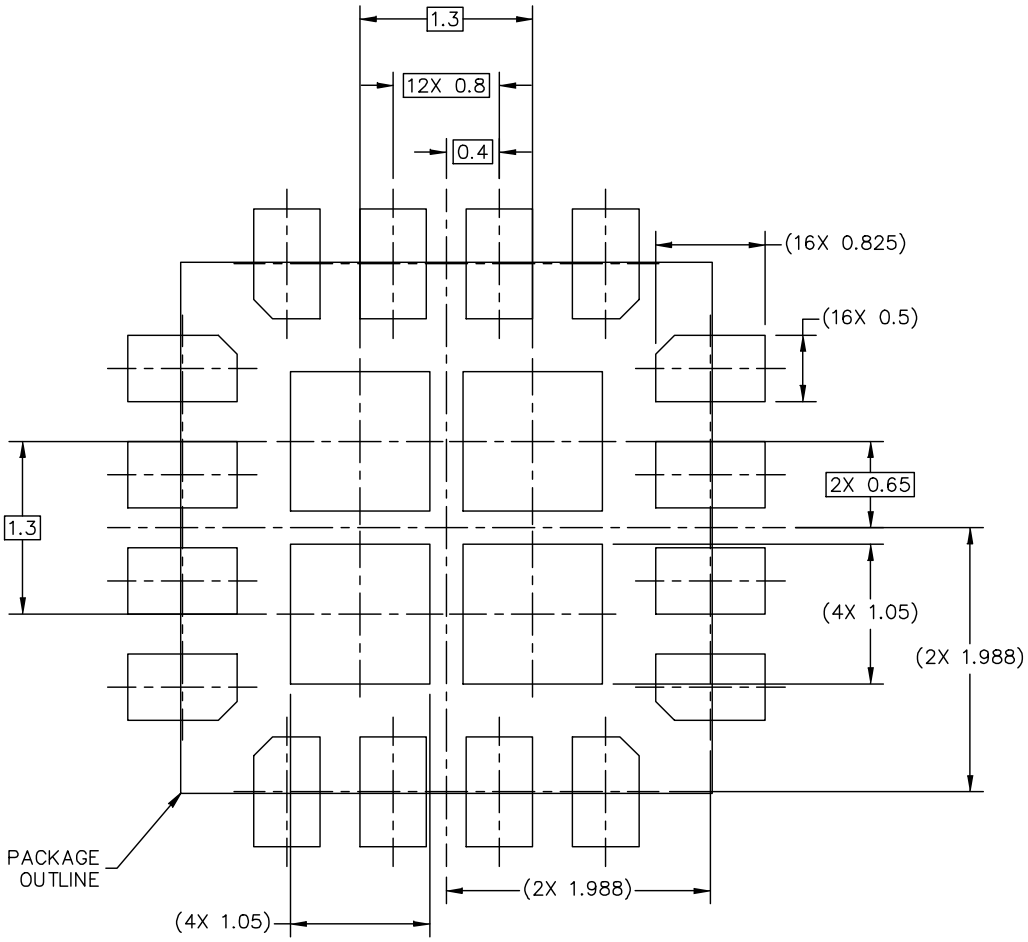

RECOMMENDED STENCIL THICKNESS 0.125 OR 0.15

PCB DESIGN GUIDELINES – SOLDER PASTE STENCIL

THIS SHEET SERVES ONLY AS A GUIDELINE TO HELP DEVELOP A USER SPECIFIC SOLUTION. DEVELOPMENT EFFORT WILL STILL BE REQUIRED BY END USERS TO OPTIMIZE PCB MOUNTING PROCESSES AND BOARD DESIGN IN ORDER TO MEET INDIVIDUAL/SPECIFIC REQUIREMENTS.

© NXP B.V. ALL RIGHTS RESERVED

DATE: 19 JUN 2020

MECHANICAL OUTLINE PRINT VERSION NOT TO SCALE	STANDARD: NON JEDEC	DRAWING NUMBER: 98ASA00893D	REVISION: C	

13 Mounting recommendations

The package should be mounted with the pressure port pointing away from sources of debris which might otherwise plug the sensor.

A plugged port exhibits no change in pressure and can be cross checked in the user software.

Refer to NXP application note AN1902 [1] for proper printed circuit board attributes and recommendations.

14 References

Note: Trademark property of NXP, used by STMicroelectronics under license

[1] **AN1902** - *Assembly guidelines for QFN (quad flat no-lead) and SON (small outline no-lead) packages*
https://www.nxp.com/docs/en/application-note/AN1902.pdf

[2] **AEC documents on Automotive Electronics Council Component Technical Committee's site:**
http://www.aecouncil.com/AECDocuments.html

Revision history

Table 10. Document revision history

Date	Version	Changes
04-May-2026	1	Initial release from ST, rebranded NXP document

Contents

1 Ordering information 2
2 Block diagram 3
3 Pinning information 4
3.1 Pinning 4
3.2 Pin description 4
4 Functional description 5
4.1 Voltage regulators 5
4.2 Pressure sensor signal path 5
4.2.1 ΣΔ converter 5
4.2.2 Digital signal processor (DSP) 6
4.3 Analog output function 9
4.3.1 Analog output signal chain 9
4.3.2 Analog output transfer function 10
5 Maximum ratings 11
6 Operating range 12
7 Static characteristics 13
8 Dynamic characteristics 14
9 Media compatibility—pressure sensors only 15
10 Application information 16
11 Package outline 17
12 Soldering 20
13 Mounting recommendations 23
14 References 24
Revision history 25
List of figures 27
List of tables 28

List of figures

Figure 1. Block diagram of FXPS7250A4S . . . 3
Figure 2. Pin configuration for 16-pin HQFN . . . 4
Figure 3. Voltage regulation and monitoring . . . 5
Figure 4. ΣΔ converter block diagram . . . 6
Figure 5. Signal chain diagram . . . 6
Figure 6. Sinc filter response . . . 6
Figure 7. 800 Hz, 4-pole, low-pass filter response . . . 7
Figure 8. 800 Hz, 4-pole output signal delay . . . 8
Figure 9. 1000 Hz, 4-pole, low-pass filter response . . . 8
Figure 10. 1000 Hz, 4-pole output signal delay . . . 9
Figure 11. Analog output transfer function . . . 10
Figure 12. Application diagram of FXPS7250A4 . . . 16
Figure 13. Package outline HQFN . . . 17
Figure 14. Package outline detail HQFN . . . 18
Figure 15. Package outline note HQFN . . . 19
Figure 16. PCB design guidelines - Solder mask opening pattern . . . 20
Figure 17. PCB design guidelines - I/O pads and solderable area . . . 21
Figure 18. PCB design guidelines - Solder paste stencil . . . 22

List of tables

Table 1. Package information . . . 2
Table 2. Ordering options . . . 2
Table 3. Pin description . . . 4
Table 4. IIR low pass filter coefficients . . . 7
Table 5. Maximum ratings . . . 11
Table 6. Electrical characteristics — supply and I/O . . . 12
Table 7. Static characteristics . . . 13
Table 8. Dynamic characteristics . . . 14
Table 9. External component recommendations . . . 16
Table 10. Document revision history . . . 25

IMPORTANT NOTICE – READ CAREFULLY

STMicroelectronics NV and its subsidiaries (“ST”) reserve the right to make changes, corrections, enhancements, modifications, and improvements to ST products and/or to this document at any time without notice.

In the event of any conflict between the provisions of this document and the provisions of any contractual arrangement in force between the purchasers and ST, the provisions of such contractual arrangement shall prevail.

The purchasers should obtain the latest relevant information on ST products before placing orders. ST products are sold pursuant to ST’s terms and conditions of sale in place at the time of order acknowledgment.

The purchasers are solely responsible for the choice, selection, and use of ST products and ST assumes no liability for application assistance or the design of the purchasers’ products.

No license, express or implied, to any intellectual property right is granted by ST herein.

Resale of ST products with provisions different from the information set forth herein shall void any warranty granted by ST for such product.

If the purchasers identify an ST product that meets their functional and performance requirements but that is not designated for the purchasers' market segment, the purchasers shall contact ST for more information.

ST and the ST logo are trademarks of ST. For additional information about ST trademarks, refer to www.st.com/trademarks. All other product or service names are the property of their respective owners.

Information in this document supersedes and replaces information previously supplied in any prior versions of this document.

© 2026 STMicroelectronics – All rights reserved