X-STM32MP-IOT01A

Data brief

Sub-1Ghz and inertial sensors expansion board for STM32 MPU

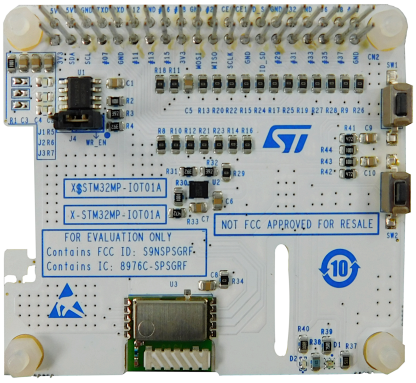

Product summary	
STM32MP expansion board for Sub1-GHz & sensor application	X-STM32MP-IOT01A
Discovery kit with STM32MP157F MPU	STM32MP157F-DK2
Sub-GHz low-power programmable RF transceiver module	SPSGRF-915
STM32 MPU OpenSTLinux software expansion package for X-STM32MP-IOT01A	X-LINUX-IOT01A
Applications	Home Building Automation/ Metering/Smart City

Features

- STM32MP expansion board based on SPIRIT1 radio
- Up to +11.6 dBm programmable RF output power
- Modulation schemes: 2-FSK, GFSK, MSK, GMSK, OOK, ASK
- On-board iNEMO inertial module for accelerometer and gyroscope
- RGB and signal LEDs
- Keys for user interface
- EEPROM for automatic setup of GPIO and driver
- Compatible with STM32MP157F-DK2 and Raspberry Pi's GPIO connector

Description

The X-STM32MP-IOT01A is an STM32 MPU expansion board with the SPSGRF-915 SPIRIT1 RF module for Sub-1 GHz RF communication with sensor, for IoT applications.

The X-STM32MP-IOT01A interfaces with the STM32MP microcontroller via GPIO connector pins, using SPI, I²C, GPIO connections for the SPSGRF-915, iNEMO inertial module, keys, and LEDs. It is compatible with the STM32MP157F-DK2 and Raspberry Pi's GPIO connector layout.

The SPSGRF-915 module operates in the 915 MHz ISM band. It is FCC certified (FCC ID: S9NSPSGRF) and IC certified (IC 8976C-SPSGRF). It is based on the SPIRIT1 Sub-1GHz transceiver and the integrated balun (BALF-SPI-01D3).

The LSM6DSOX iNEMO inertial module is a 3-axis digital accelerometer and a 3-axis digital gyroscope with a full-scale acceleration range of ±2/±4/±8/±16 g and an angular rate range of ±125/±250/±500/±1000/±2000 dps.

1 Block diagram

Figure 1. **Block diagram**

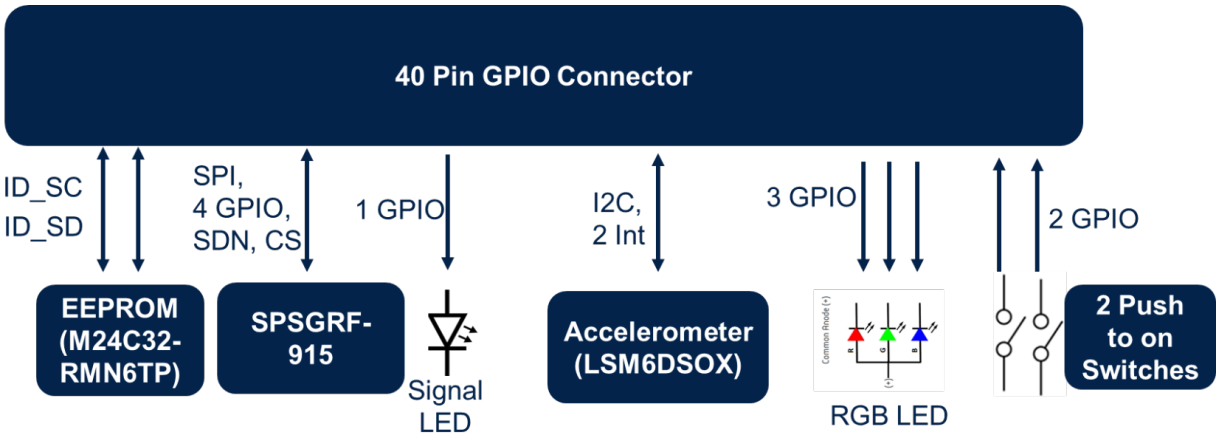

2 Schematic diagrams

Figure 2. X-STM32MP-IOT01A circuit schematic (1 of 6)

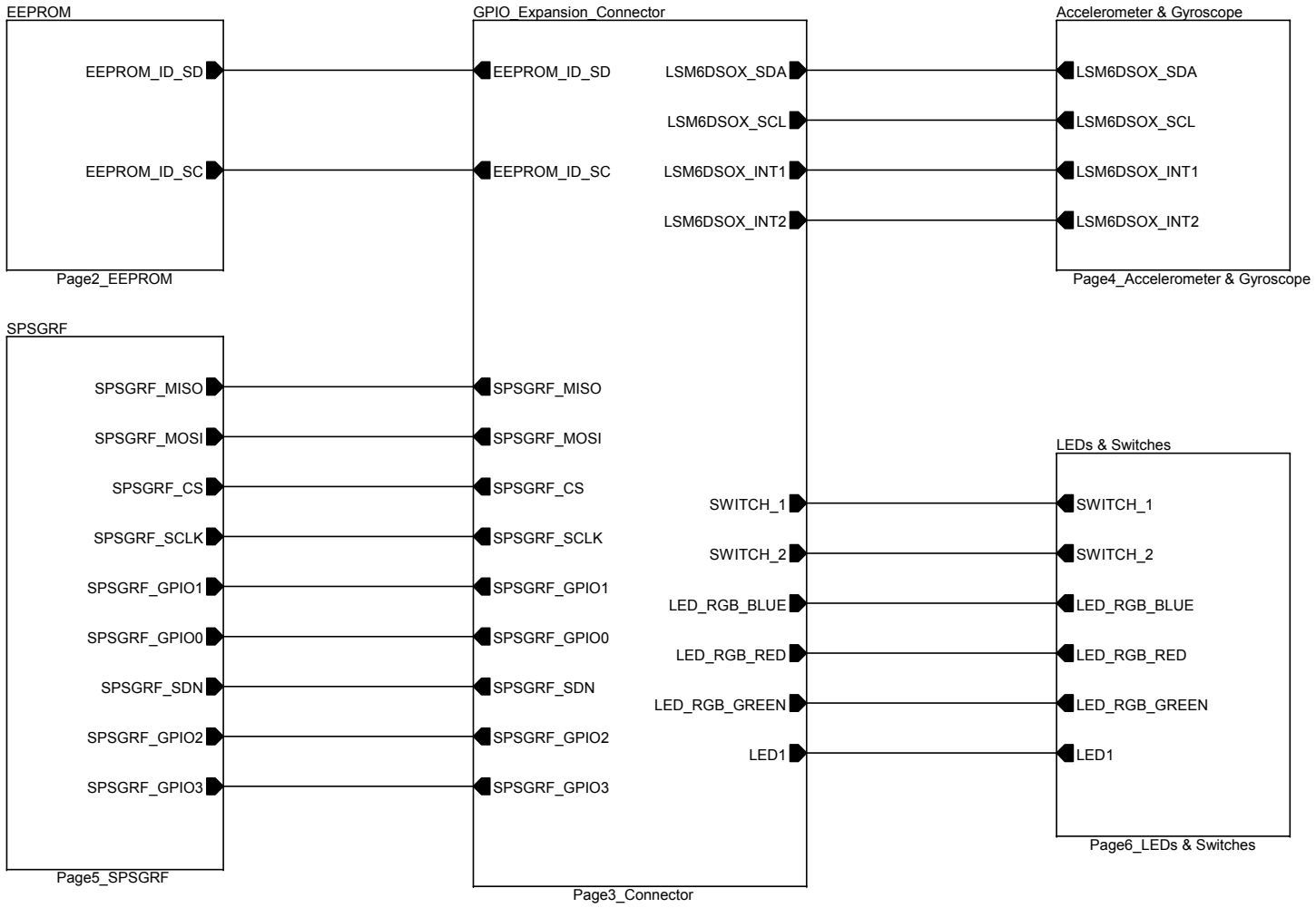

Figure 3. X-STM32MP-IOT01A circuit schematic (2 of 6)

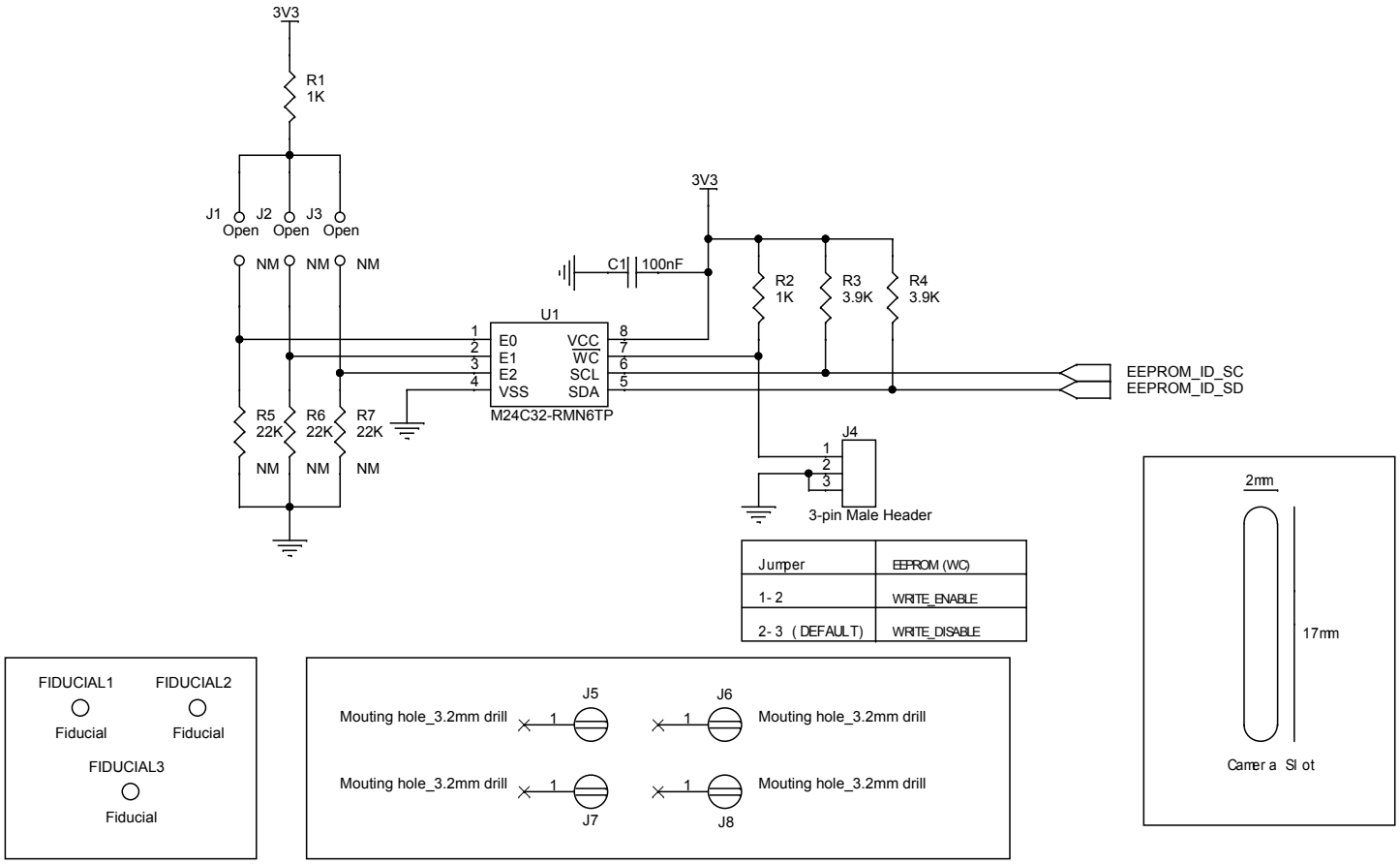

Figure 4. X-STM32MP-IOT01A circuit schematic (3 of 6)

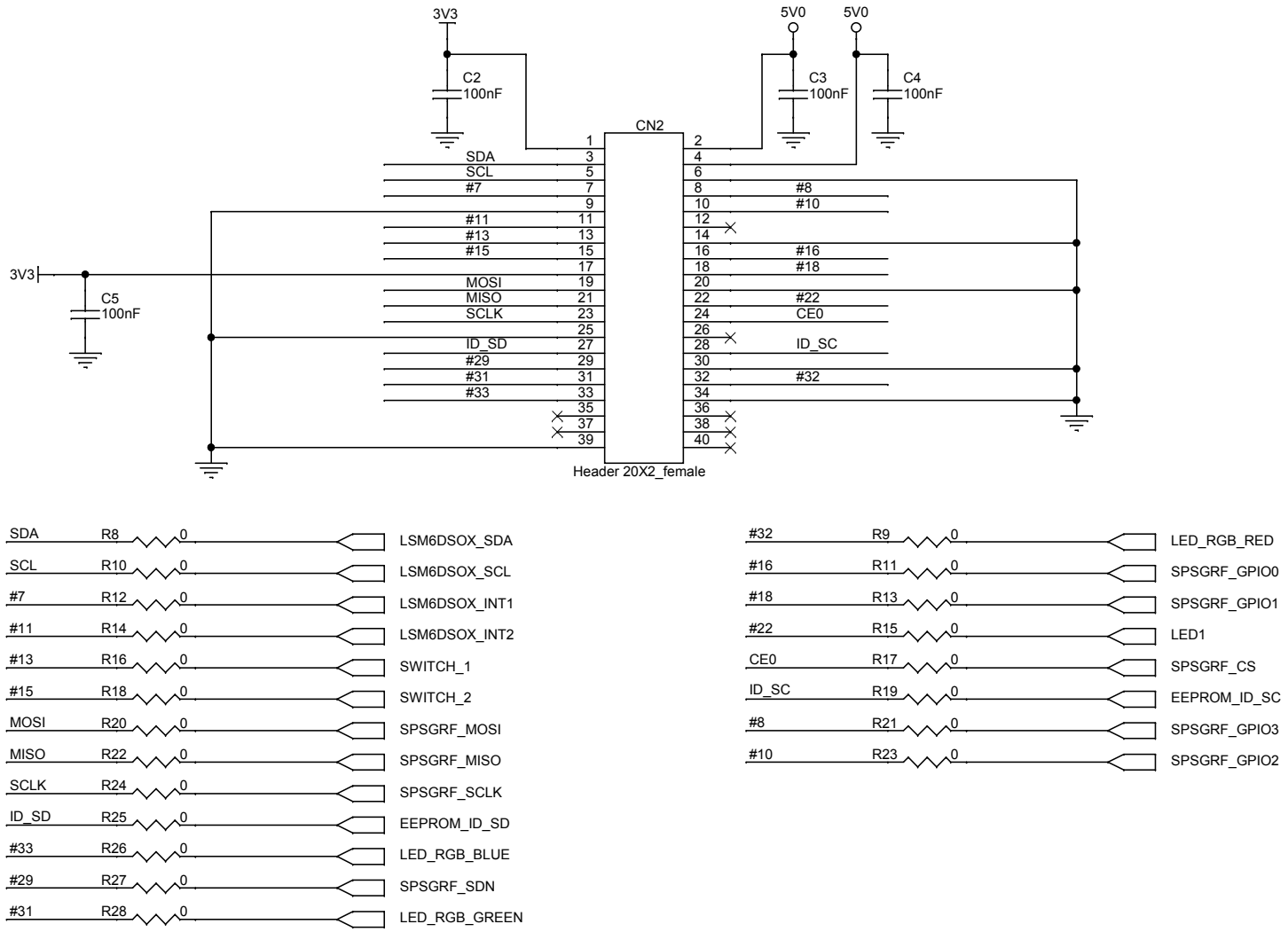

Figure 5. X-STM32MP-IOT01A circuit schematic (4 of 6)

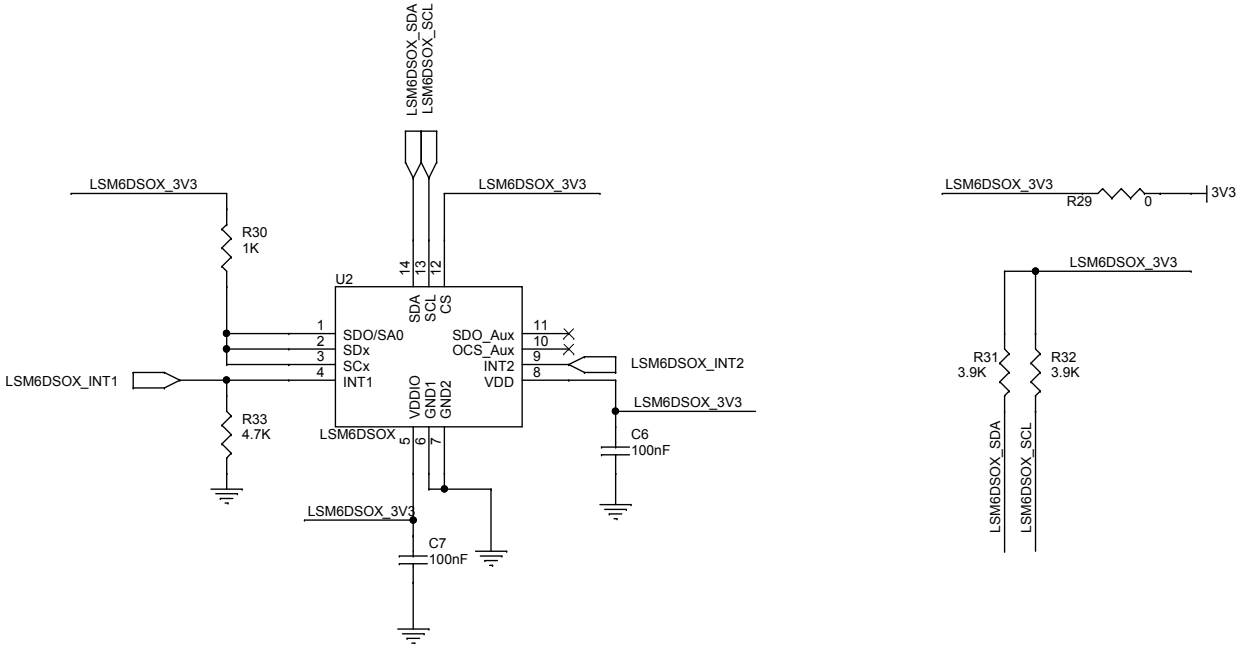

Figure 6. X-STM32MP-IOT01A circuit schematic (5 of 6)

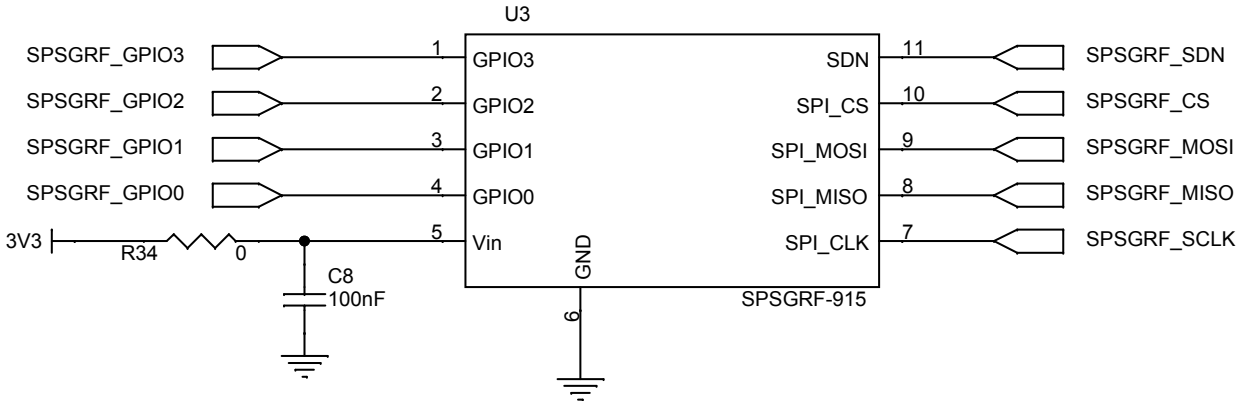

Figure 7. X-STM32MP-IOT01A circuit schematic (6 of 6)

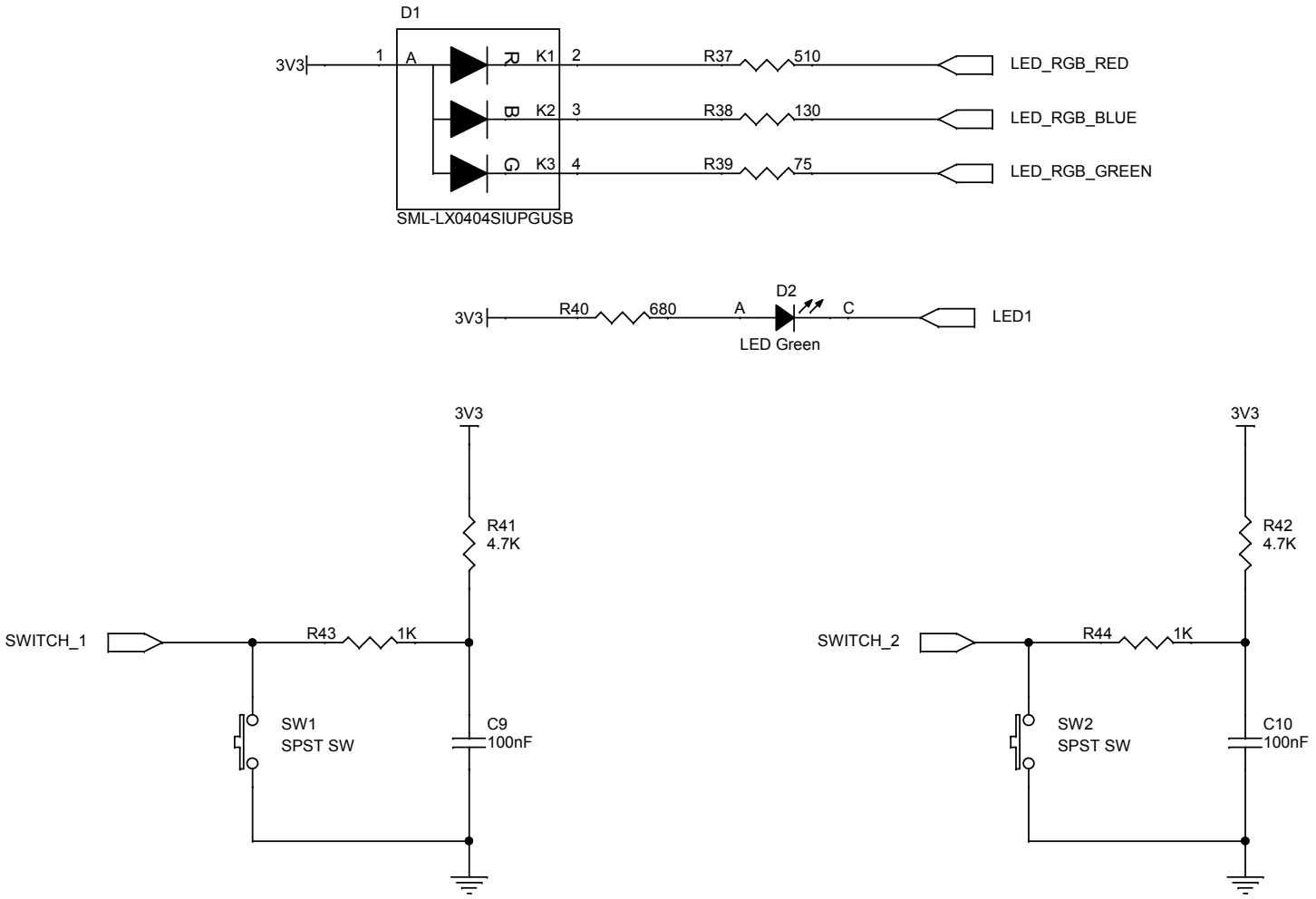

3 Board versions

Table 1. X-STM32MP-IOT01A versions

PCB version	Schematic diagrams	Bill of materials
X$STM32MP-IOT01A [1]	X$STM32MP-IOT01A schematic diagrams	X$STM32MP-IOT01A bill of materials

1. *This code identifies the X-STM32MP-IOT01A evaluation board first version. It is printed on the board PCB.*

Revision history

Table 2. Document revision history

Date	Revision	Changes
15-Jun-2022	1	Initial release.

IMPORTANT NOTICE – READ CAREFULLY

STMicroelectronics NV and its subsidiaries (“ST”) reserve the right to make changes, corrections, enhancements, modifications, and improvements to ST products and/or to this document at any time without notice. Purchasers should obtain the latest relevant information on ST products before placing orders. ST products are sold pursuant to ST’s terms and conditions of sale in place at the time of order acknowledgment.

Purchasers are solely responsible for the choice, selection, and use of ST products and ST assumes no liability for application assistance or the design of purchasers’ products.

No license, express or implied, to any intellectual property right is granted by ST herein.

Resale of ST products with provisions different from the information set forth herein shall void any warranty granted by ST for such product.

ST and the ST logo are trademarks of ST. For additional information about ST trademarks, refer to www.st.com/trademarks. All other product or service names are the property of their respective owners.

Information in this document supersedes and replaces information previously supplied in any prior versions of this document.

© 2022 STMicroelectronics – All rights reserved