STEVAL-TTPPFC01

Data brief

99.3% efficiency, 2 kW, 3-channel interleaved totem-pole PFC with resonant ZVS digital control

The picture shown is for illustration purpose only.
Actual product may vary depending on buyer's selection and availability.

Product summary	
2 kW 3-channel interleaved Totem-Pole PFC with resonant ZVS digital control	STEVAL-TTPPFC01
Mainstream Arm Cortex-M4 MCU 170 MHz with 512 Kbytes of Flash memory, Math Accelerator, HR Timer, High Analog level integration	STM32G474QET6
N-channel 600 V, 36 mOhm typ., 62 A MDmesh DM6 Power MOSFET in a TO-247 package	STW70N60DM6
N-channel 650 V, 0.012 Ohm typ., 138 A MDmesh M5 Power MOSFET in a Max247 package	STY145N65M5
Galvanically isolated 4 A single gate driver	STGAP2SMTR
VIPerPlus family: Quasi-resonant high performance off line high voltage converter	VIPER35LD
Applications	Server & Telecom Power / TV PSU / PFC Converter - Single Phase Input / Digital Power

Features

- 99.3% peak efficiency at 230 V_{AC}, with all bias losses included
- >99.1% flat efficiency from 30% load at 230 V_{AC}
- Heatsink-free and fan-free cooling
- Input voltage range: 90 to 253 V_{AC}
- Line frequency range: 47 to 63 Hz
- Maximum output power: 2 kW at 230 V_{AC}, 1 kW at 115 V_{AC}
- Output voltage: 390 ± 2 V
- Power factor: > 0.99 at full load, 230 V_{AC}
- Total harmonic distortion (THDi): <3% at full load, 230 V_{AC}
- Power section based on MDmesh SJ Power MOSFETs
- Digital control section based on the STM32G474QE microcontroller
  - Hysteresis current mode control
  - Variable frequency ZVS operation
  - Average switching frequency: 60 kHz (for each channel at full load)
  - Cycle-by-cycle regulation
  - Input voltage and load feedforward
  - Phase shedding
  - Burst-mode operation
  - Overcurrent/voltage/temperature protections
  - Inrush current limiter function
- Modular hardware architecture
- Dimensions (cm): L x W x H = 29.6 x 9.1 x 4.5
- Power density: 1.85 W/cm3 (30.4 W/inc3)

Description

The STEVAL-TTPPFC01 offers a very high flat efficiency PFC solution in a full digital three-channel interleaved totem-pole topology. A conversion efficiency higher than 99.1% using ST MDmesh DM6 superjunction power MOSFETs is obtained, as well as a very high power factor and low THDi.

The PFC operates in the zero voltage switching (ZVS) resonant mode with hysteresis current control, which is fully implemented in the STM32G474QE microcontroller, thanks to the integrated DACs, fast comparators, and high-resolution timer peripheral HRTIM, to ensure a high dynamic and precise cycle-by-cycle current control.

The STEVAL-TTPPFC01 evaluation kit is a modular solution, which consists of: a power board, which contains all the main passive devices and all the daughter boards plug connectors; a control board, which embeds the STM32G474QE microcontroller; an auxiliary power supply board, which generates all the voltages for driving, sensing, MCU, etc.; three high-frequency half-bridge boards; a low-frequency half-bridge board.

1 Detailed description

The STEVAL-TTPPFC01 implements ZVS-PFC control with the STM32G474QE microcontroller. It includes a voltage loop for the output voltage regulation, a fast ZVS hysteresis current control with interleaving, and the input rectification function for the mains synchronization.

A fast input and load feedforward enhance the PFC dynamic response in case a load step or input voltage variation occur.

Figure 1. STEVAL-TTPPFC01 block diagram

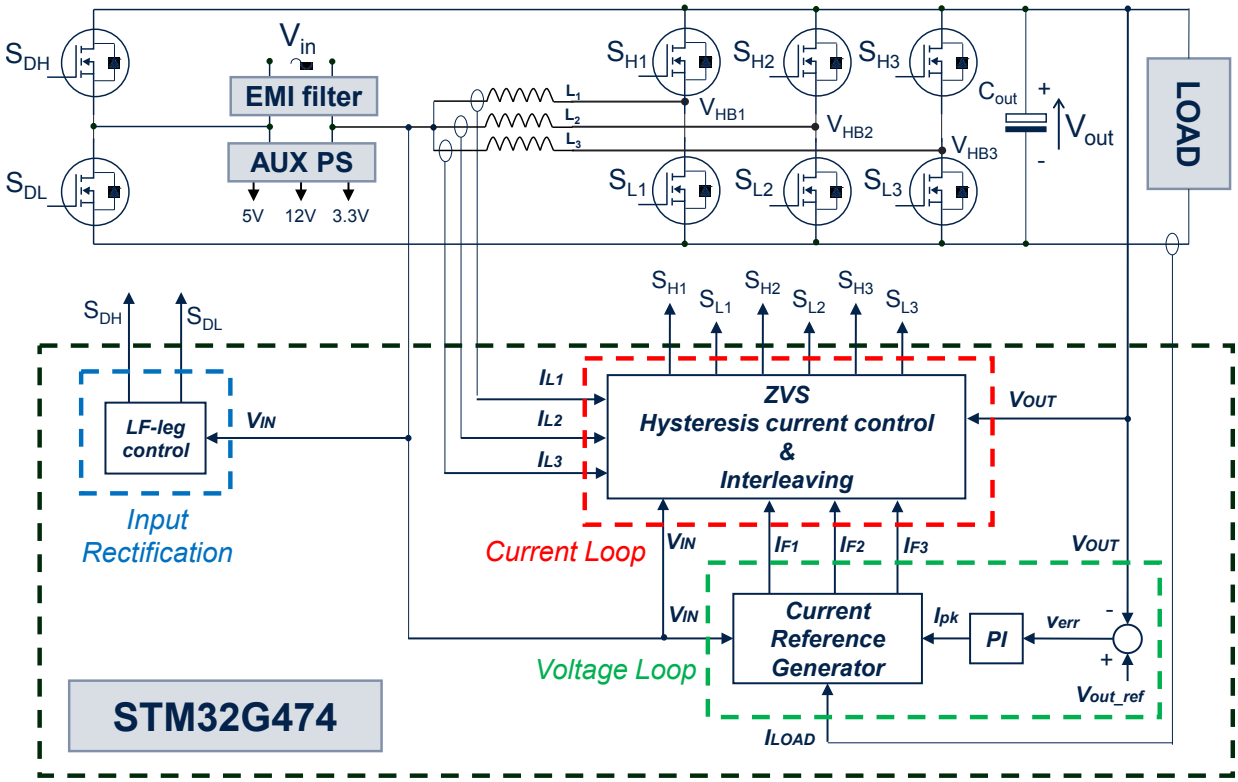

The PFC stage is based on a totem-pole boost circuit design with three parallel channels to take advantage of the interleaving operation, that is, less ripple and a higher apparent switching frequency in the PFC input current. It allows using smaller and less expensive input EMI filters, boost inductors, and switching devices.

The STW70N60DM6 MOSFETs used as high-frequency switches offer one of the most effective switching behaviors available in the market for the most demanding high-efficiency topologies and ZVS converters.

The STY145N65M5 MOSFET is used for the low-frequency half-bridge. Thanks to its extremely low on-resistance, it is particularly suitable for applications that require high power and superior efficiency.

The VIPER35LD generates the auxiliary voltages: 5 V for sensors, 12 V for driving, and 3.3 V for the MCU and other sensing circuitry.

2 Schematic diagrams

Important: These schematics are for illustration purpose only. Actual product may vary depending on buyer's selection and availability.

Figure 2. STEVAL-TTPPFC01 - power board circuit schematic (1 of 5)

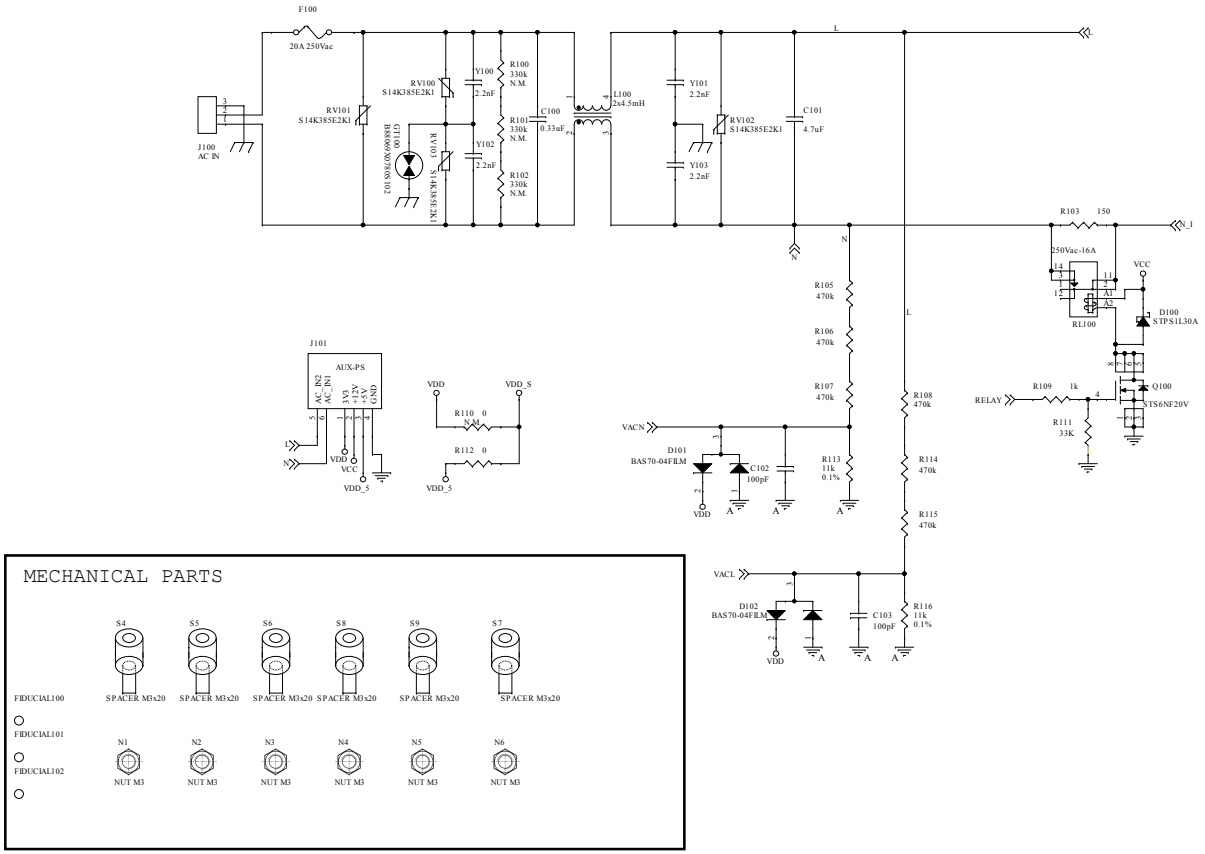

Figure 3. STEVAL-TTPPFC01 - power board circuit schematic (2 of 5)

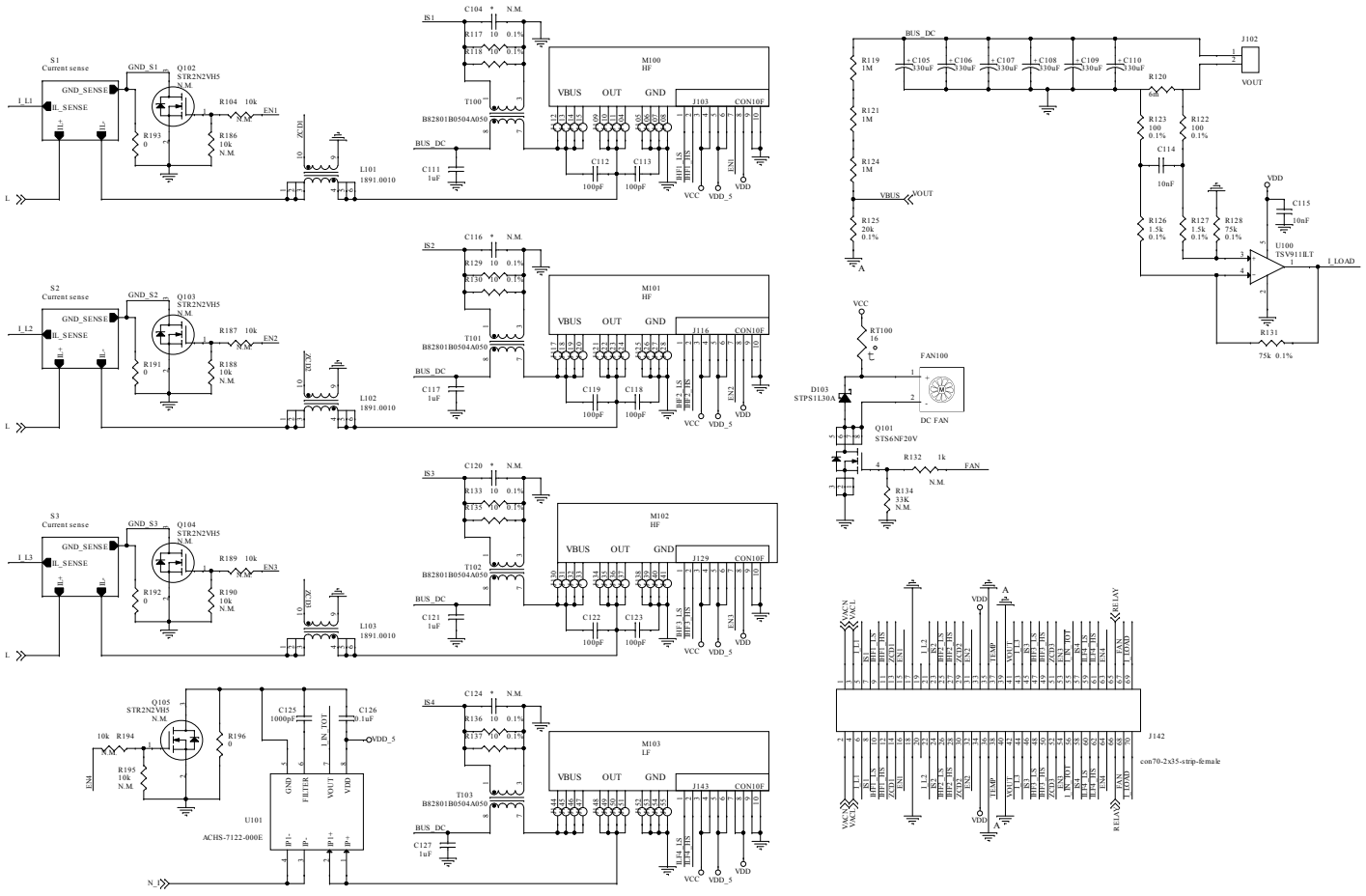

Figure 4. STEVAL-TTPPFC01 - power board circuit schematic (3 of 5)

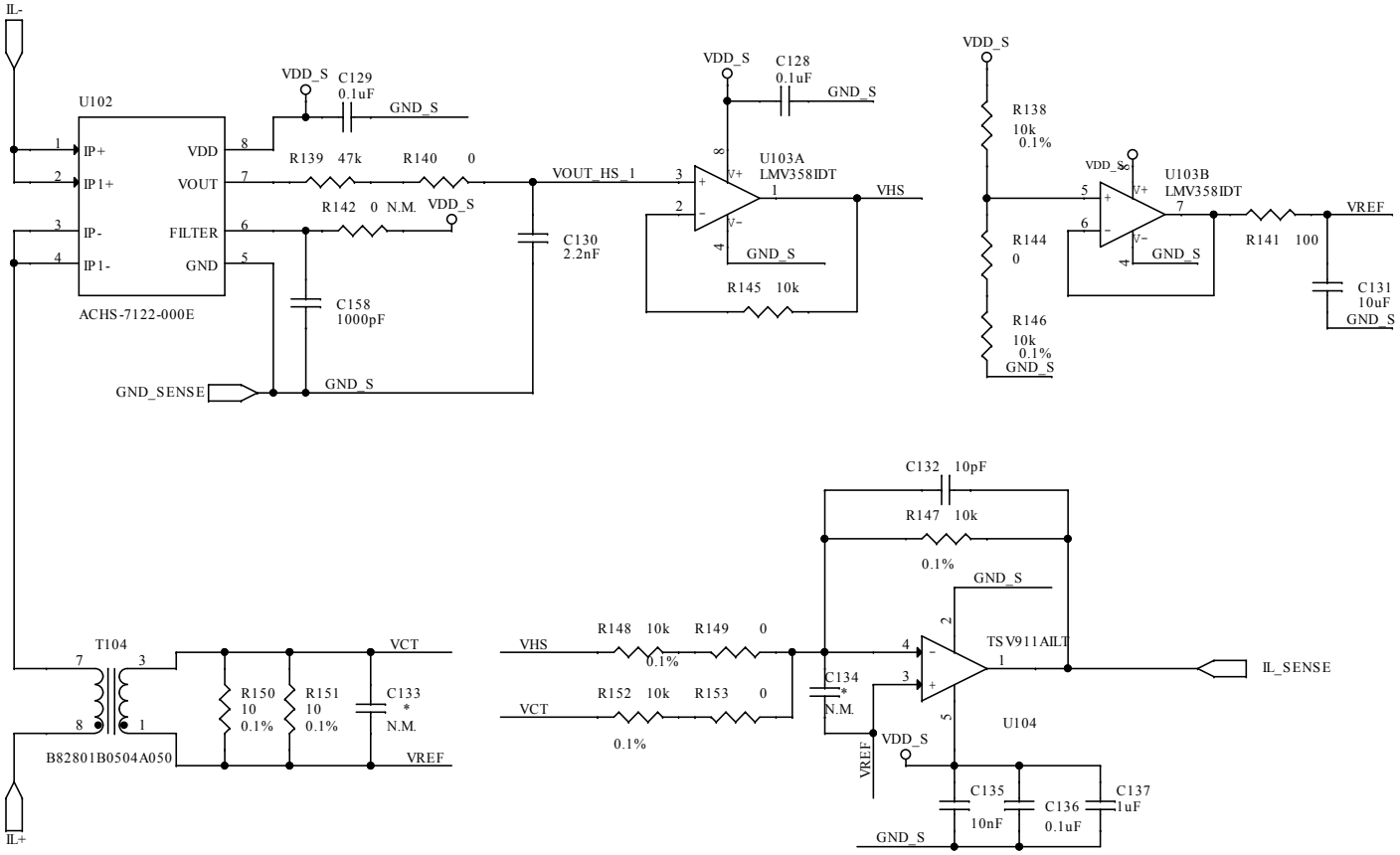

Figure 5. STEVAL-TTPPFC01 - power board circuit schematic (4 of 5)

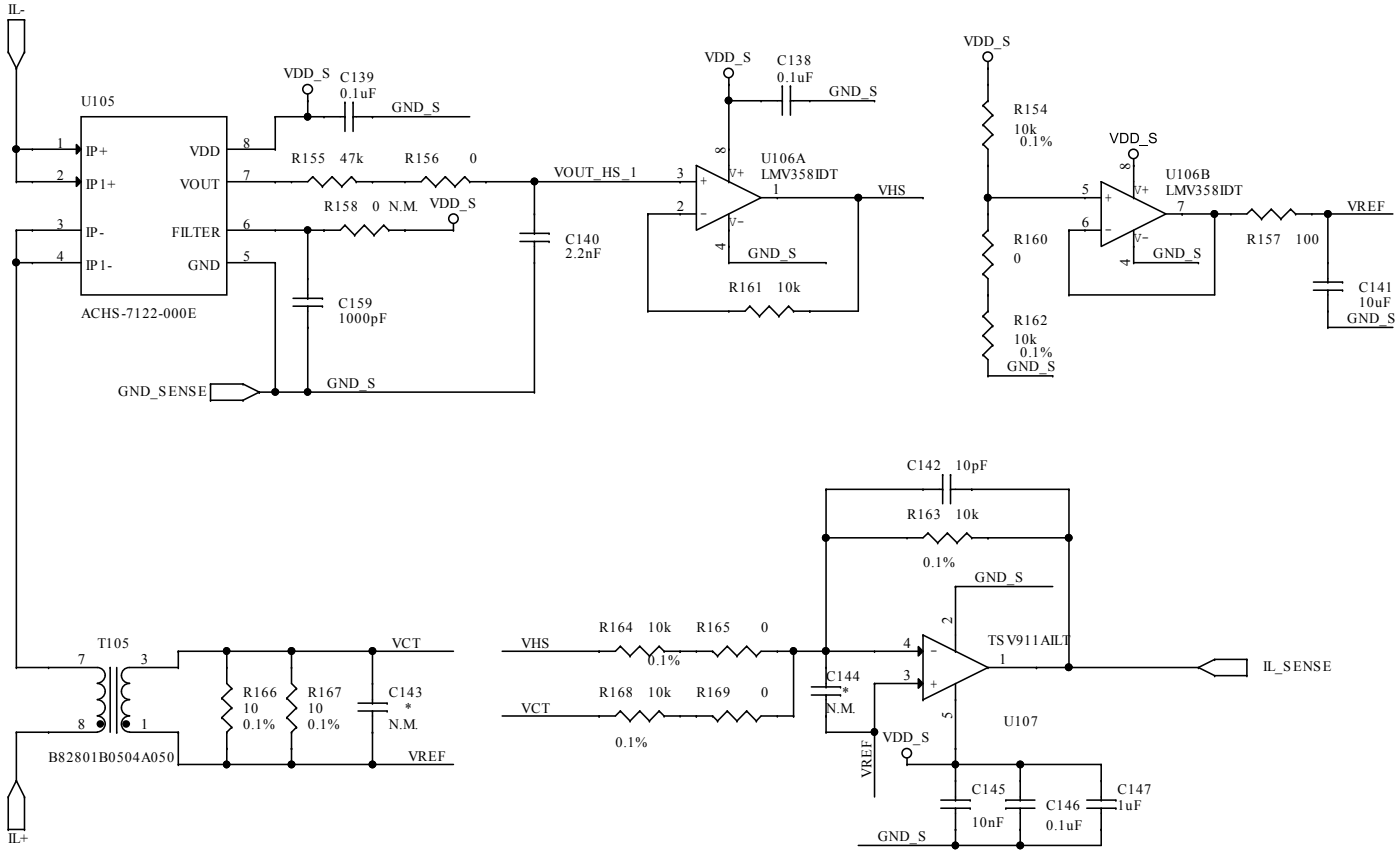

Figure 6. STEVAL-TTPPFC01 - power board circuit schematic (5 of 5)

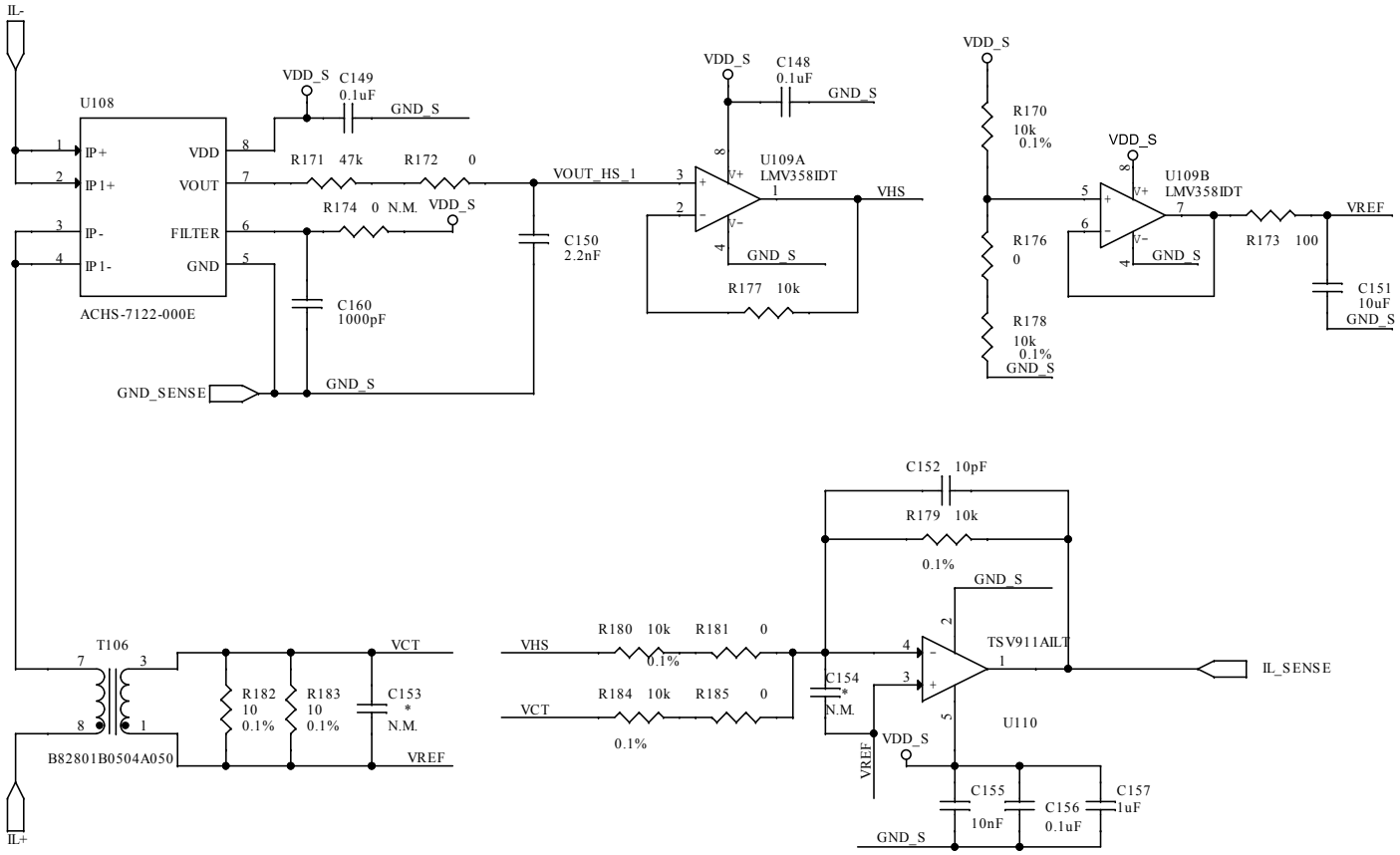

Figure 7. STEVAL-TTPPFC01 - control board circuit schematic (1 of 2)

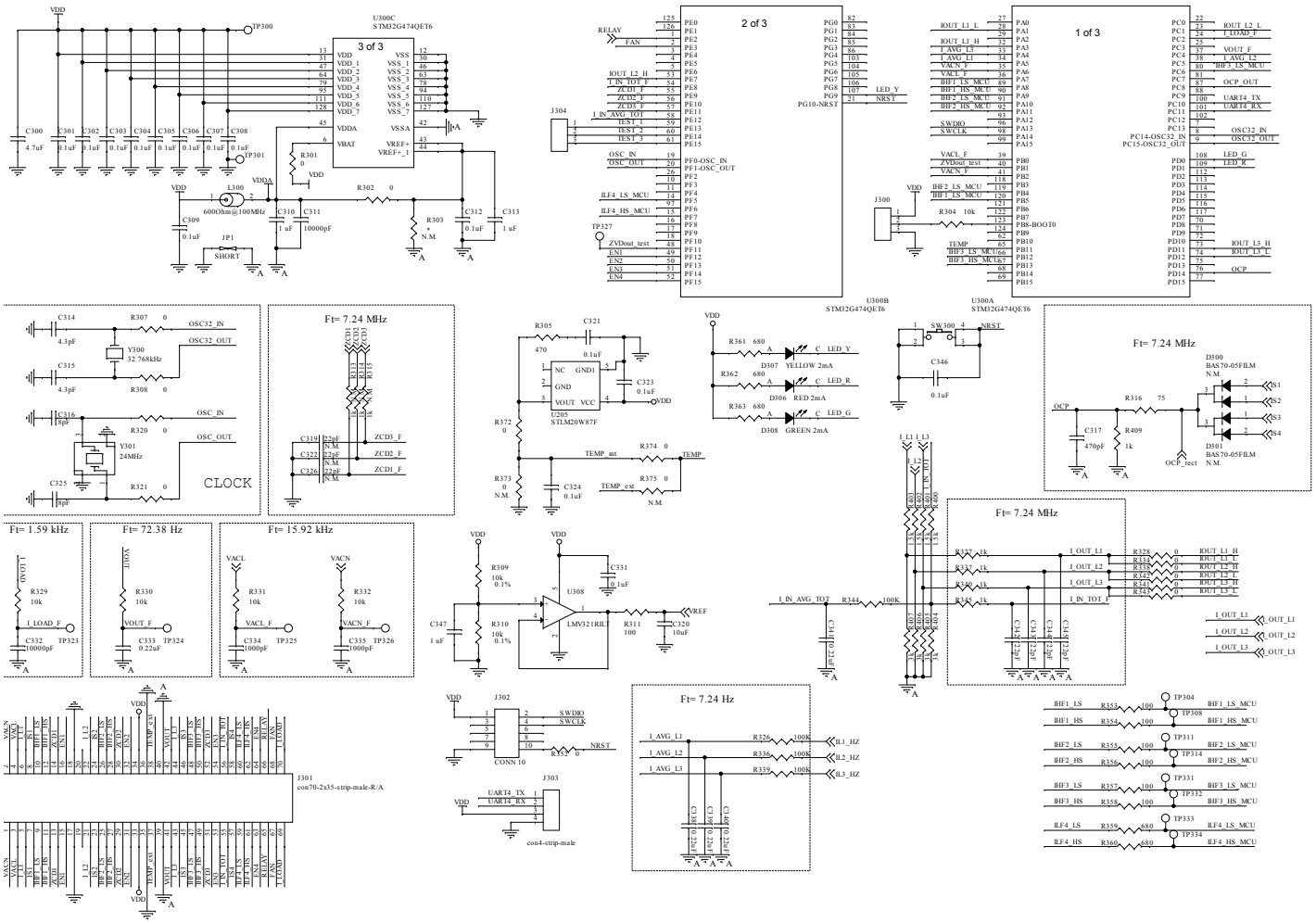

Figure 8. STEVAL-TTPPFC01 - control board circuit schematic (2 of 2)

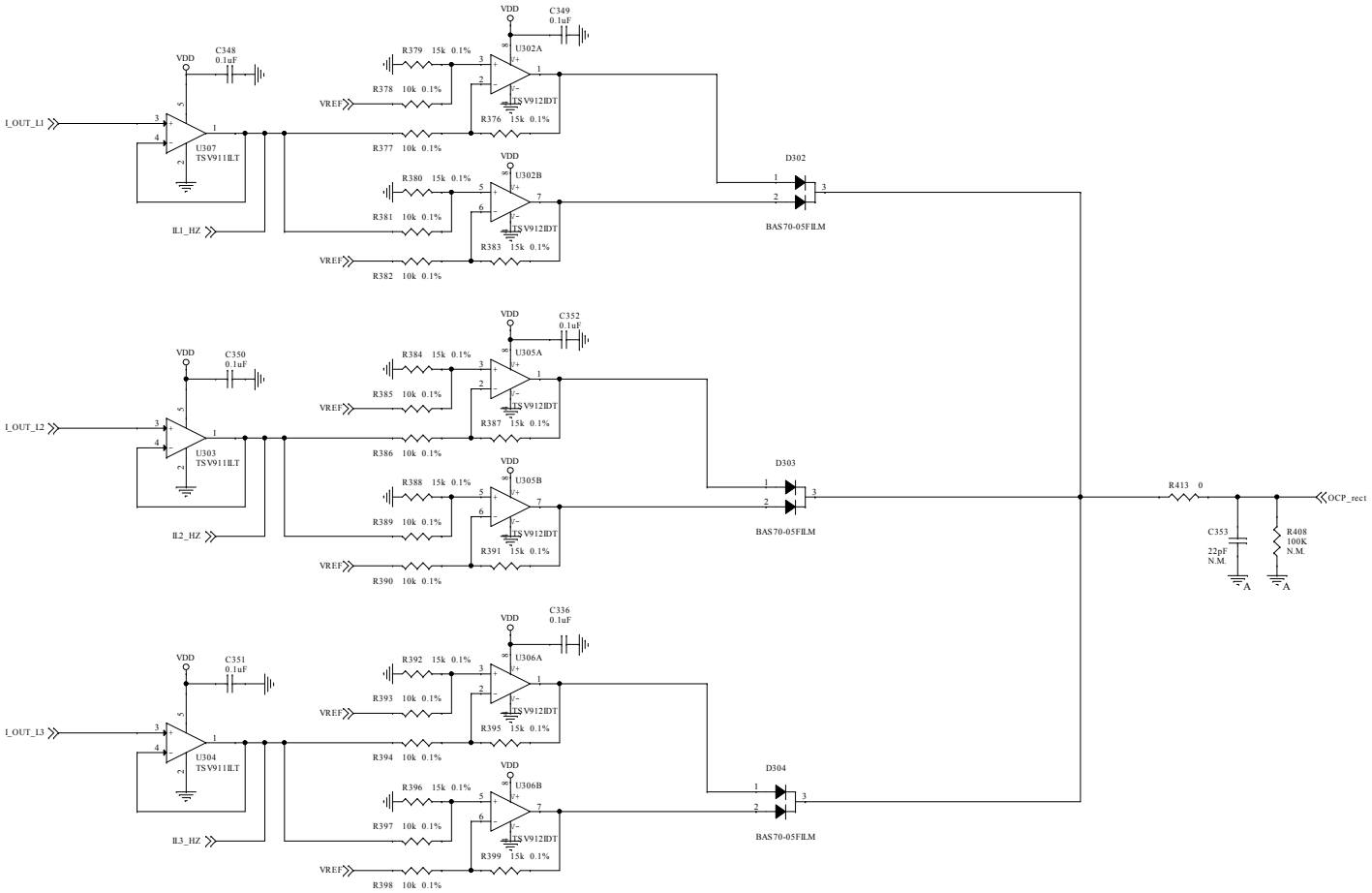

Figure 9. STEVAL-TTPPFC01 - auxiliary board circuit schematic

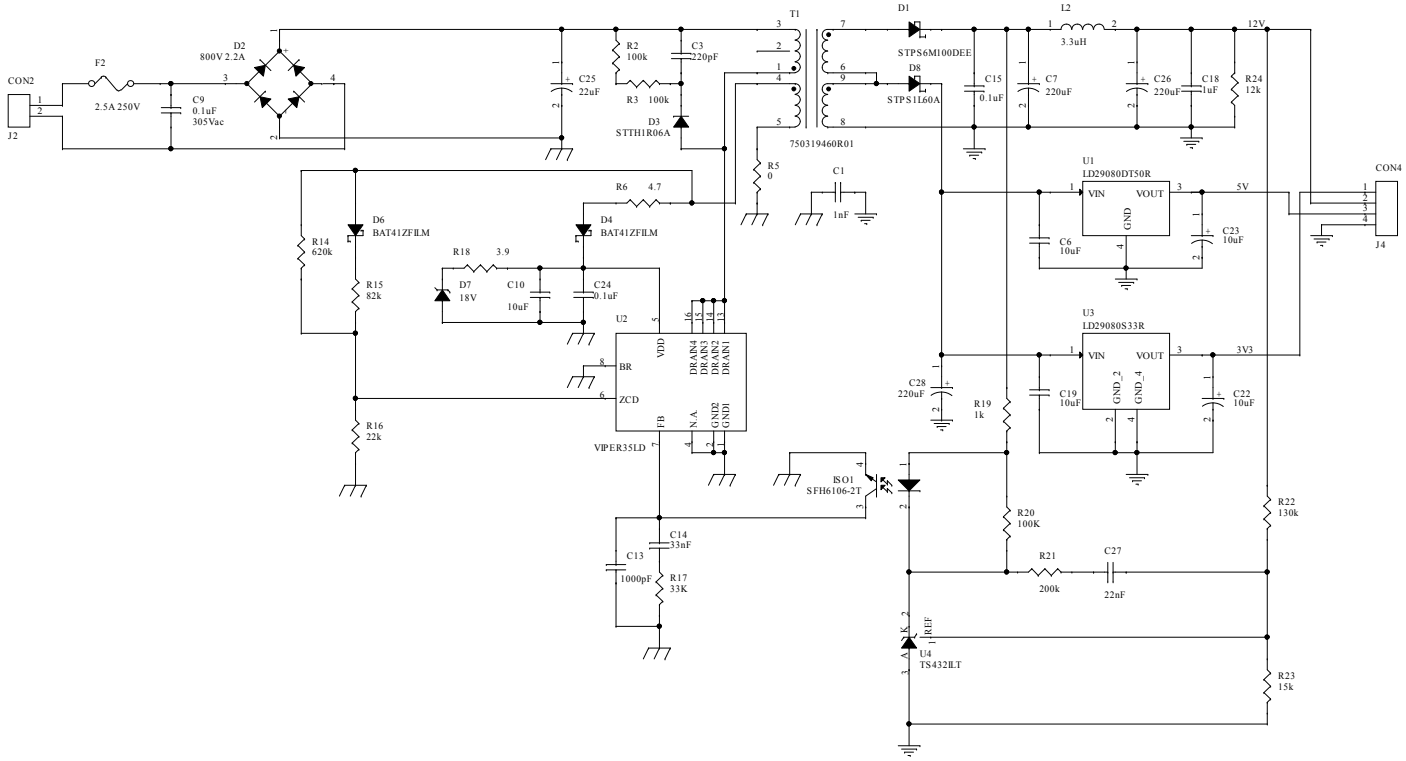

Figure 10. STEVAL-TTPPFC01 - high-frequency half-bridge board circuit schematic

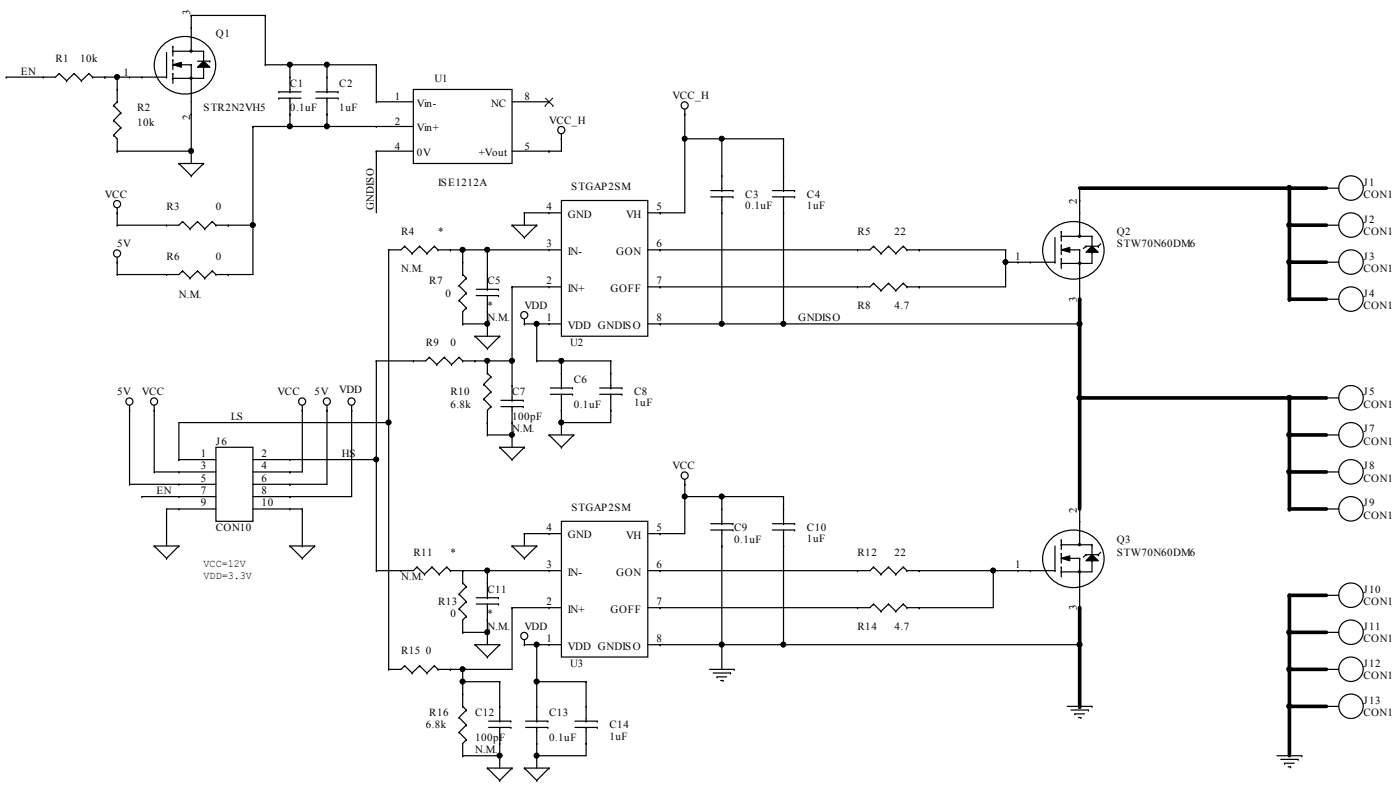

Figure 11. STEVAL-TTPPFC01 - low-frequency half-bridge board circuit schematic

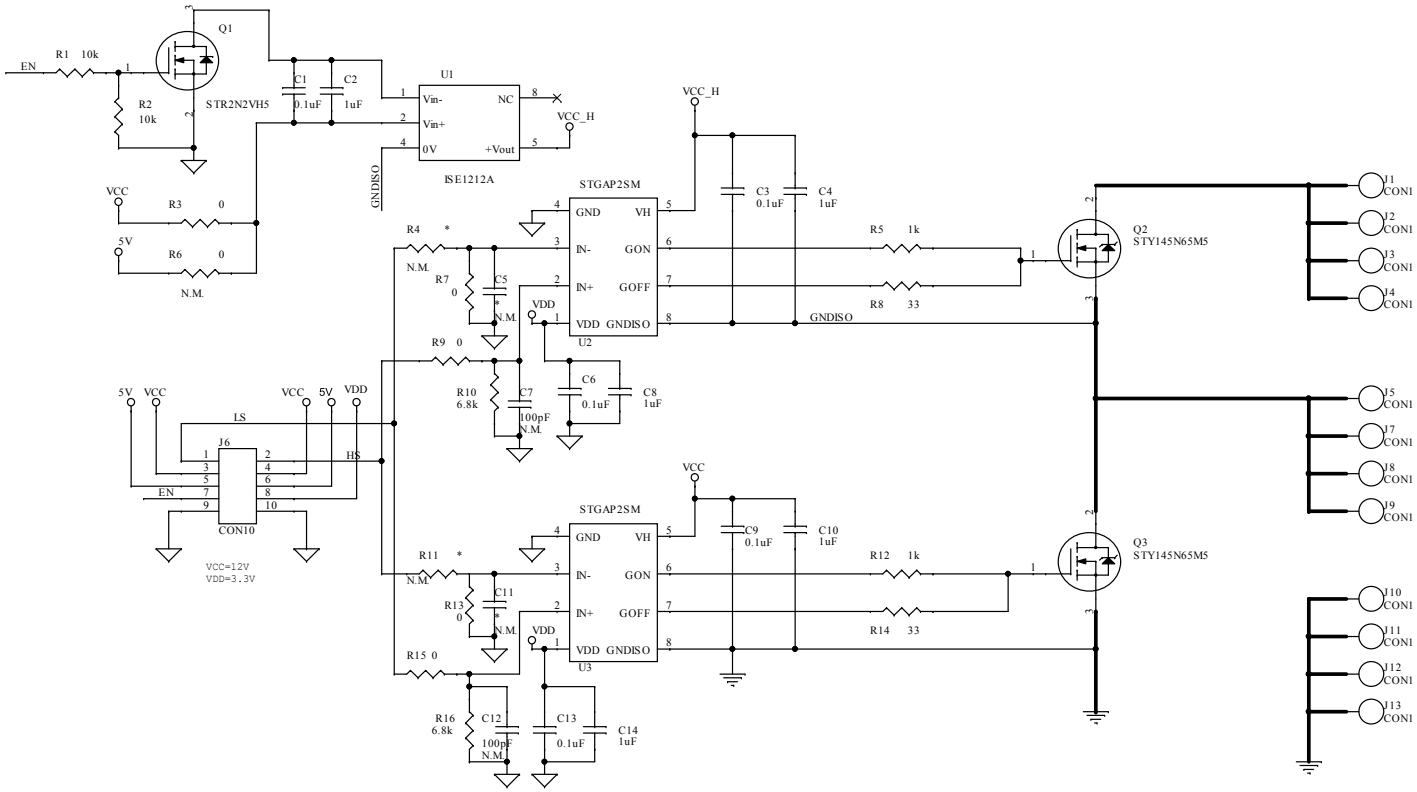

3 Custom evaluation boards information

Notice: These evaluation boards are custom designed and built, in small quantities, according to specific requests from customers and are destined for evaluation and testing of ST products in a research and development setting. Please contact ST to provide your specific requests and get your custom built board(s).

Revision history

Table 1. Document revision history

Date	Revision	Changes
05-Oct-2022	1	Initial release.
25-Oct-2022	2	Updated document title.
31-Jan-2023	3	Updated features.
02-Nov-2023	4	Added note to cover image. Updated *Section 2 Schematic diagrams.* Added *Section 3 Custom evaluation boards information*
14-Oct-2025	5	Updated Section 2: Schematic diagrams.

IMPORTANT NOTICE – READ CAREFULLY

STMicroelectronics NV and its subsidiaries (“ST”) reserve the right to make changes, corrections, enhancements, modifications, and improvements to ST products and/or to this document at any time without notice.

In the event of any conflict between the provisions of this document and the provisions of any contractual arrangement in force between the purchasers and ST, the provisions of such contractual arrangement shall prevail.

The purchasers should obtain the latest relevant information on ST products before placing orders. ST products are sold pursuant to ST’s terms and conditions of sale in place at the time of order acknowledgment.

The purchasers are solely responsible for the choice, selection, and use of ST products and ST assumes no liability for application assistance or the design of the purchasers’ products.

No license, express or implied, to any intellectual property right is granted by ST herein.

Resale of ST products with provisions different from the information set forth herein shall void any warranty granted by ST for such product.

If the purchasers identify an ST product that meets their functional and performance requirements but that is not designated for the purchasers' market segment, the purchasers shall contact ST for more information.

ST and the ST logo are trademarks of ST. For additional information about ST trademarks, refer to www.st.com/trademarks. All other product or service names are the property of their respective owners.

Information in this document supersedes and replaces information previously supplied in any prior versions of this document.

© 2025 STMicroelectronics – All rights reserved