STEVAL-SPIN3204

Data brief

Six-step brushless motor driver evaluation board for applications based on the STSPIN32F0B BLDC controller

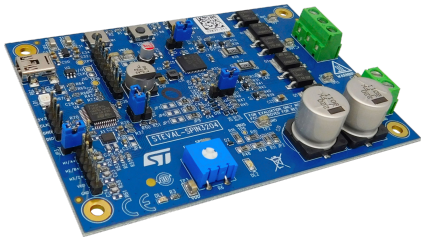

Features

- Input voltage from 7 to 45 V
- Output current up to 15 A_{RMS}
- Power stage based on STD140N6F7 MOSFET
- Embedded 3.3 V buck regulator
- Embedded 12 V LDO regulator
- Single shunt current sensing
- Digital Hall sensors and encoder input
- Overcurrent comparator
- Bus voltage sensing
- Embedded ST-LINK/V2-1
- Easy user interface with buttons and trimmer
- RoHS and WEEE compliant

Product summary	
Motor driver evaluation board based on the STSPIN32F0B 3-phase BLDC controller	STEVAL-SPIN3204
N-channel 60 V, 3.1 mΩ typ., 80 A STripFET F7 Power MOSFET in a DPAK package	STD140N6F7
Advanced single shunt BLDC controller with embedded STM32 MCU	STSPIN32F0B
STM32 Motor Control SDK	X-CUBE-MCSDK
Applications	Smart Home/ Industrial Motor Control/Industrial Tools

Applications

- Battery powered power tools
- Home appliances
- Pumps and fans
- Industrial automation

Description

The STEVAL-SPIN3204 three-phase brushless DC motor driver board is based on the STSPIN32F0B 3-phase BLDC controller with triple half-bridge gate driver, single shunt resistor current sensing topology and programmable overcurrent protection.

The motor controller system-in-package includes a microcontroller ready to execute a 6-step algorithm in the firmware, which can be downloaded onto the chip flash memory via the board USB port.

The board is designed to help you to test and to develop motor control designs for applications: power tools, home appliances, fans, and pumps.

A flexible evaluation platform allows you to toggle between external sensor and sensorless position feedback data methods.

1 Solution overview

The STEVAL-SPIN3204 motor control board can be set up to control a three-phase brushless DC (BLDC) motor based on position feedback data from one of the following sources:

- external quadrature encoders or Hall Effect sensors
- on-board circuitry that senses the back electromotive force (BEMF) generated by the load motor.

Figure 1. STEVAL-SPIN3204 motor control block diagram

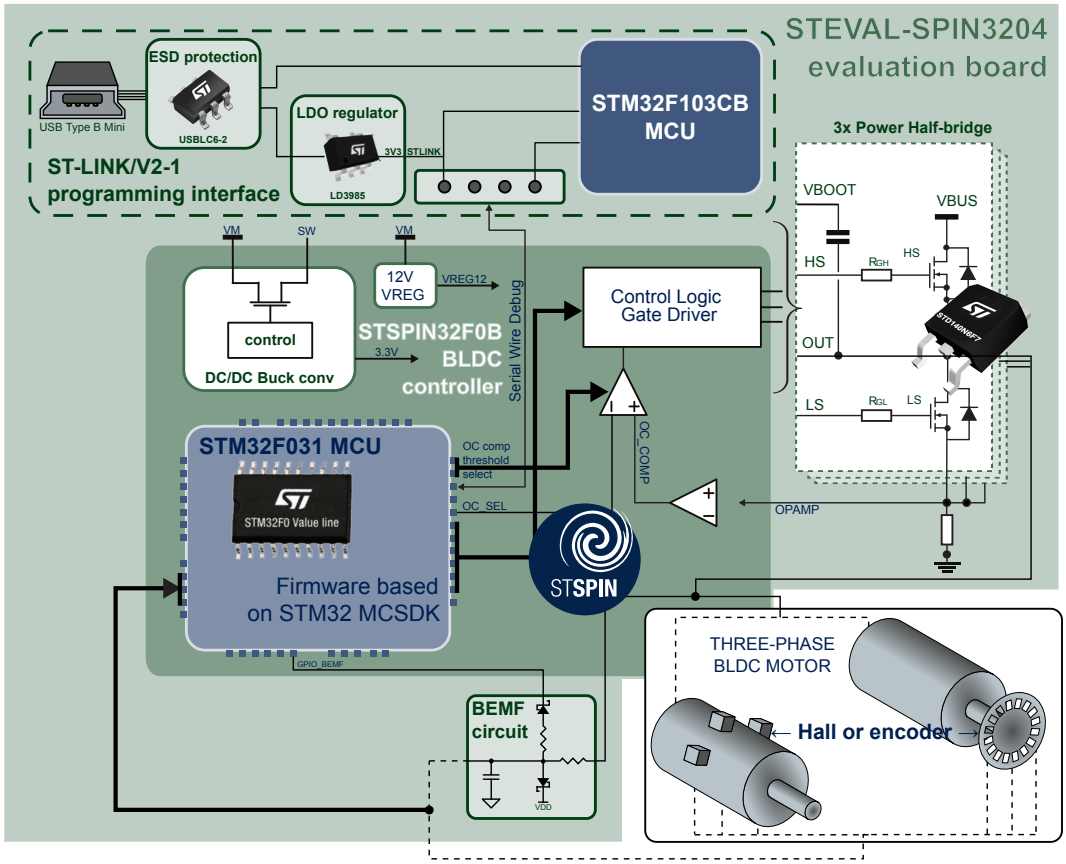

The power stage on the board delivers 15 A_{RMS} DC current from three STD140N6F7 MOSFETs in half-bridge configuration managed by the triple half-bridge gate driver on the BLDC controller.

The board senses the current flowing into the motor phases through a shunt resistor, and the resulting signal is amplified, filtered and forwarded to the STSPIN32F0B BLDC controller MCU and control logic gate driver for monitoring and peak current limitation or overcurrent protection, depending on the driving method implemented in the firmware (voltage mode or current mode, respectively). Voltage sensing is implemented through a voltage divider from the motor supply voltage (VBUS) and sent to the BLDC controller MCU for monitoring purposes.

The board also features an embedded ST-LINK/V2-1 programmer/debugger to help you load, test and modify the motor controller firmware.

2 Schematic diagrams

Figure 2. STEVAL-SPIN3204 schematic - motor controller MCU and interfaces

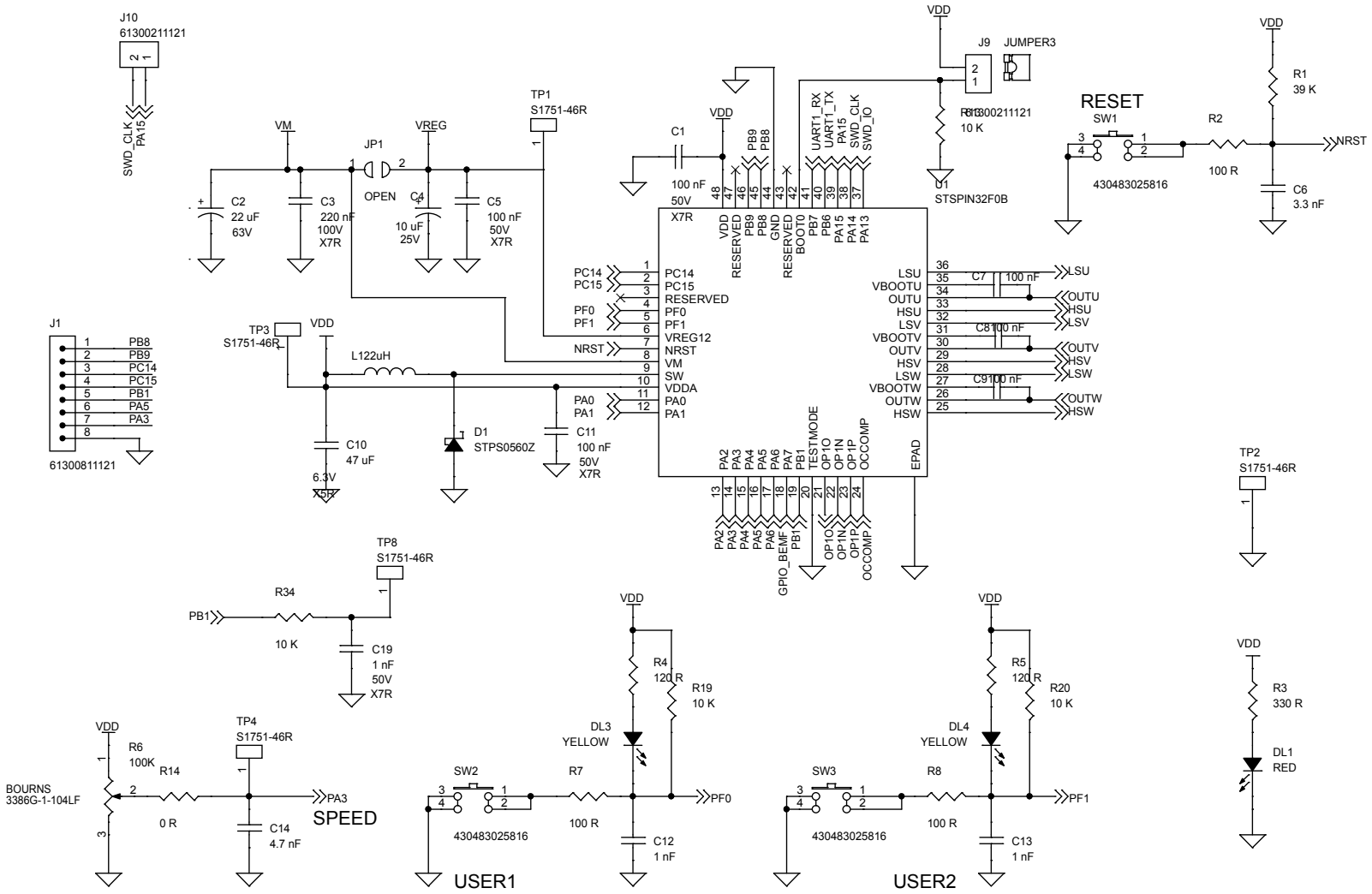

Figure 3. STEVAL-SPIN3204 schematic - power stage and external sensor inputs

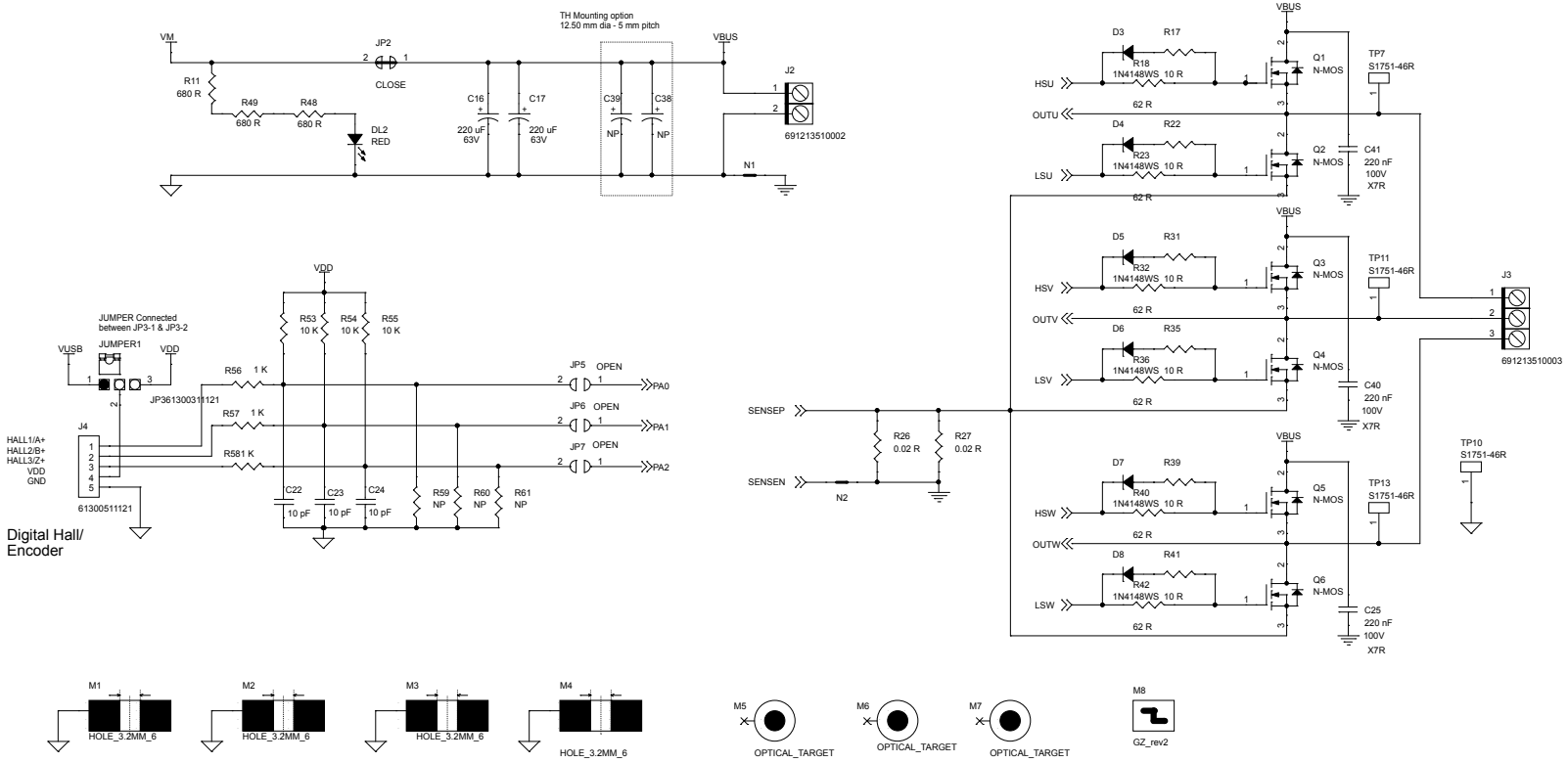

Figure 4. STEVAL-SPIN3204 schematic - current and voltage feedback, and BEMF sensing circuits

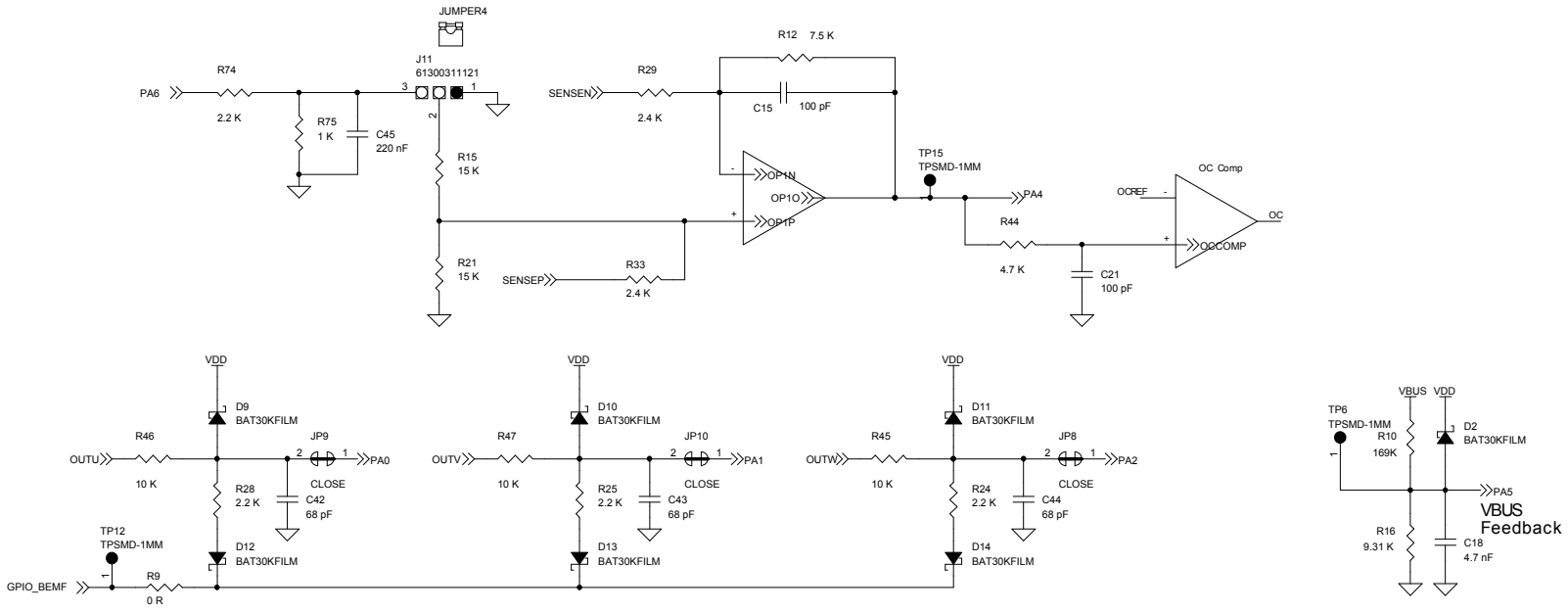

Figure 5. STEVAL-SPIN3204 schematic - ST-LINK

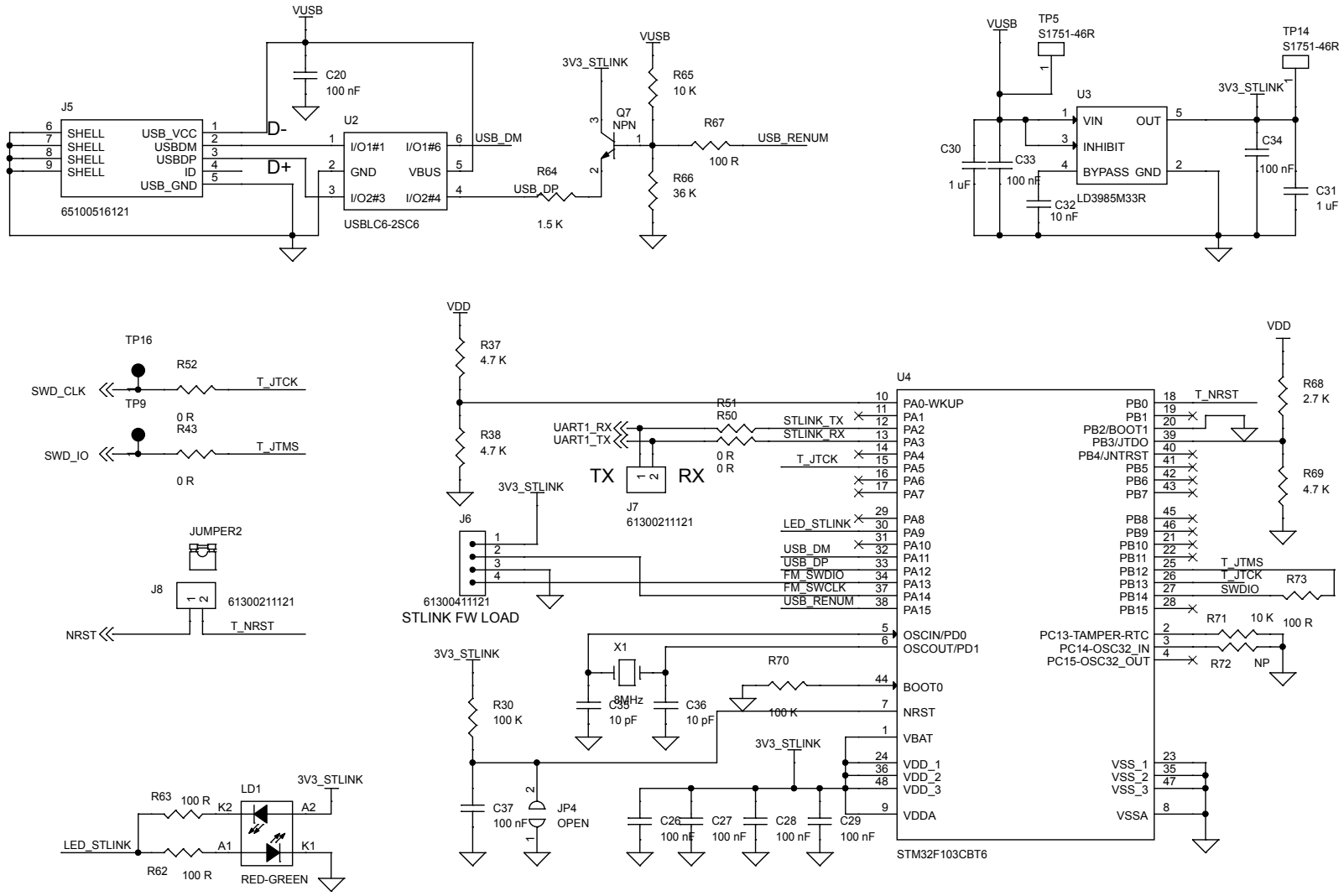

Revision history

Table 1. Document revision history

Date	Version	Changes
06-May-2019	1	Initial release.
19-Jul-2021	2	Updated cover page product summary table and Solution overview. Added references to X-CUBE-MCSDK-Y.
12-Nov-2024	3	Updated Product Summary and Description.

IMPORTANT NOTICE – READ CAREFULLY

STMicroelectronics NV and its subsidiaries (“ST”) reserve the right to make changes, corrections, enhancements, modifications, and improvements to ST products and/or to this document at any time without notice. Purchasers should obtain the latest relevant information on ST products before placing orders. ST products are sold pursuant to ST’s terms and conditions of sale in place at the time of order acknowledgment.

Purchasers are solely responsible for the choice, selection, and use of ST products and ST assumes no liability for application assistance or the design of purchasers’ products.

No license, express or implied, to any intellectual property right is granted by ST herein.

Resale of ST products with provisions different from the information set forth herein shall void any warranty granted by ST for such product.

ST and the ST logo are trademarks of ST. For additional information about ST trademarks, refer to www.st.com/trademarks. All other product or service names are the property of their respective owners.

Information in this document supersedes and replaces information previously supplied in any prior versions of this document.

© 2024 STMicroelectronics – All rights reserved