STEVAL-IPS1024V1

Data brief

Industrial chip board based on IPS1024H

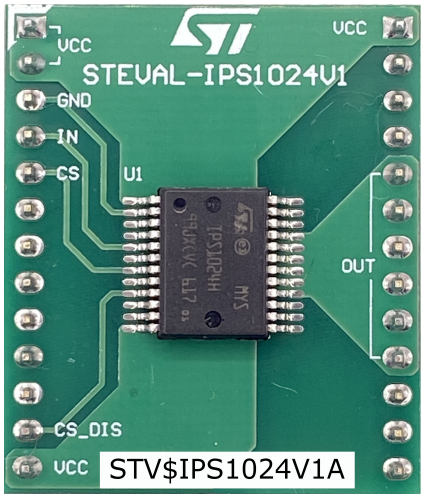

Product summary	
Industrial chip board based on IPS1024H	STEVAL-IPS1024V1
Single Channel High Side Switch with overload protection	IPS1024HK
Applications	• Programmable Logic Controllers • Industrial PC peripheral input/ output • Numerical control machines

Features

The STEVAL-IPS1024V1 is intended to be used in industrial I/O modules and PLC (programmable logic controller) applications, especially in those where industrial safety worths.

- Based on the IPS1024H single channel high-side switch, which features:
  - $R_{ON(Max.)}$ (@T_J = 25 °C) = 12 mΩ
  - Very low standby current
  - 3.3 V CMOS compatible inputs
  - Optimized electromagnetic emission
  - Very low electromagnetic susceptibility
  - Proportional load current sense
  - Very low current sense leakage
  - High current sense precision for wide range currents
  - Current sense disable
  - Undervoltage shutdown
  - Overvoltage clamp
  - Load current limitation
  - Self limiting of fast thermal transients
  - Protection against loss of ground and loss of VCC
  - Designed to drive DC-13 loads according to EN 60947-5-1
  - Designed to meet IEC 61131-2, IEC 61000-4-2, IEC 61000-4-4, IEC 61000-4-5
  - PowerSSO-24 package
- CE certified:
  - EN IEC 61000-6-2:2019
  - EN IEC 61000-6-4:2019
  - EN 55032:2015 + A1:2020 + A11:2020
  - EN 55035:2017 + A11:2020
- ECOPACK®: lead free and RoHS compliant

Description

The STEVAL-IPS1024V1 industrial chip board provides a powerful and flexible environment for the evaluation of the driving and diagnostic capabilities of the IPS1024H single channel high-side switch, which features active current limitation combined with thermal shutdown and automatic restart.

The STEVAL-IPS1024V1 interfaces through 2 x 13 pin strips with the X-NUCLEO-DOHS0A1 expansion board for STM32 Nucleo.

The expansion board can be connected to either a NUCLEO-F401RE or a NUCLEO-G431RB development board through the Arduino® R3 connectors.

1 Schematic diagrams

Figure 1. **STEVAL-IPS1024V1 circuit schematic**

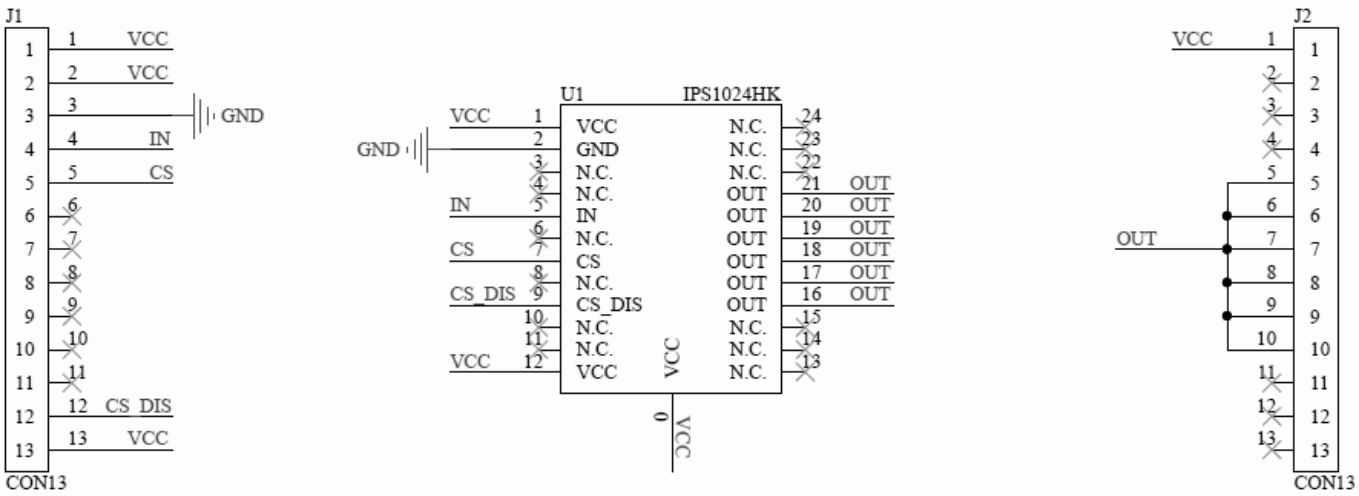

2 Board versions

Table 1. STEVAL-IPS1024V1 versions

Finished good	Schematic diagrams	Bill of materials
STV$IPS1024V1A [1]	STV$IPS1024V1A schematic diagrams	STV$IPS1024V1A bill of materials

1. *This code identifies the STEVAL-IPS1024V1 evaluation board first version.*

Revision history

Table 2. Document revision history

Date	Revision	Changes
11-Sep-2026	1	Initial release.

IMPORTANT NOTICE – READ CAREFULLY

STMicroelectronics NV and its subsidiaries (“ST”) reserve the right to make changes, corrections, enhancements, modifications, and improvements to ST products and/or to this document at any time without notice.

In the event of any conflict between the provisions of this document and the provisions of any contractual arrangement in force between the purchasers and ST, the provisions of such contractual arrangement shall prevail.

The purchasers should obtain the latest relevant information on ST products before placing orders. ST products are sold pursuant to ST’s terms and conditions of sale in place at the time of order acknowledgment.

The purchasers are solely responsible for the choice, selection, and use of ST products and ST assumes no liability for application assistance or the design of the purchasers’ products.

No license, express or implied, to any intellectual property right is granted by ST herein.

Resale of ST products with provisions different from the information set forth herein shall void any warranty granted by ST for such product.

If the purchasers identify an ST product that meets their functional and performance requirements but that is not designated for the purchasers' market segment, the purchasers shall contact ST for more information.

ST and the ST logo are trademarks of ST. For additional information about ST trademarks, refer to www.st.com/trademarks. All other product or service names are the property of their respective owners.

Information in this document supersedes and replaces information previously supplied in any prior versions of this document.

© 2026 STMicroelectronics – All rights reserved