STEVAL-DPS334C1

Data brief

Digital power supply control board based on STM32F334

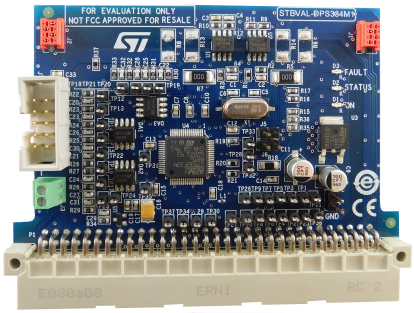

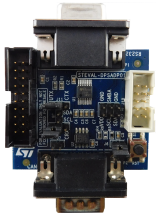

Product summary	
Digital power supply control unit with control board and adapter board	STEVAL-DPS334C1
3 kW power supply evaluation kit	STEVAL-DPSLLCK1
firmware package for STEVAL-DPSLLCK1 evaluation board	STSW-DPSLLCK1
3.6 kW Totem Pole PFC with inrush current limiter reference design	STEVAL-DPSTPFC1
300 W very high AC input voltage LED driver with digital power control	STEVAL-LLL009V1
Applications	Digital power

Features

- Control board for digital SMPS based on STM32F334 microcontroller
- High-resolution timer (HRTIM) for DSMPS applications
- 64-pin DIN 41612 connector for DSMPS modular approach
- Opto-coupled serial communication for board-to-board communication
- RC filters for analog inputs
- Protection of analog lines of microcontroller with diode arrays
- Adapter board provided for programming and User Communication (USART, CAN, SMBus)
- Supply voltage: 5 V
- Embedded 5 V/3.3 V voltage regulator
- Dedicated test points for debugging
- LED signaling for power-on, faults and general purpose
- RoHS compliant

Description

The STEVAL-DPS334C1 is a digital power supply control kit, consisting of a main board based on the STM32F334R8 microcontroller from STM32F3 family and an adapter board to program the microcontroller.

The STM32F334R8 microcontroller includes the high-performance ARM® Cortex®-M4 32-bit RISC core operating at up to 72 MHz frequency, a floating point unit (FPU) and high-speed embedded memories (64 Kbytes of Flash memory and 16 Kbytes of SRAM). The MCU offers two fast 12-bit ADCs (5 Msps), three ultra-fast comparators, an operational amplifier, three DAC channels, a low-power RTC, one general-purpose, 32-bit timer, one timer dedicated to motor control, four general-purpose, 16-bit timers and the high-resolution timer (HRTIM), specifically designed to drive power conversion systems.

The main board embeds a standard 64-pin DIN 41612 connector for connection with a power board, providing all the control signals, sensing networks and protection features needed for a wide range of digital power supply applications. The board can be supplied by an external 5 V supply voltage either through a dedicated connector or through the main connector.

The adapter board provides a configurable user communication (SMBus, CAN or RS-232) with two DB9 connectors and the appropriate transceiver ICs, a dedicated 10-pin connector which provides the SWD interface for debugging and USART communication for user interface (UI), as well as the standard JTAG connector for programming. The board includes a reset button and a termination resistance between the CAN lines.

The STEVAL-DPS334C1 is designed to be easily connected with another control board via opto-coupled serial communication and dedicated connectors.

1 Schematic diagrams

Figure 1. Control board schematic 1

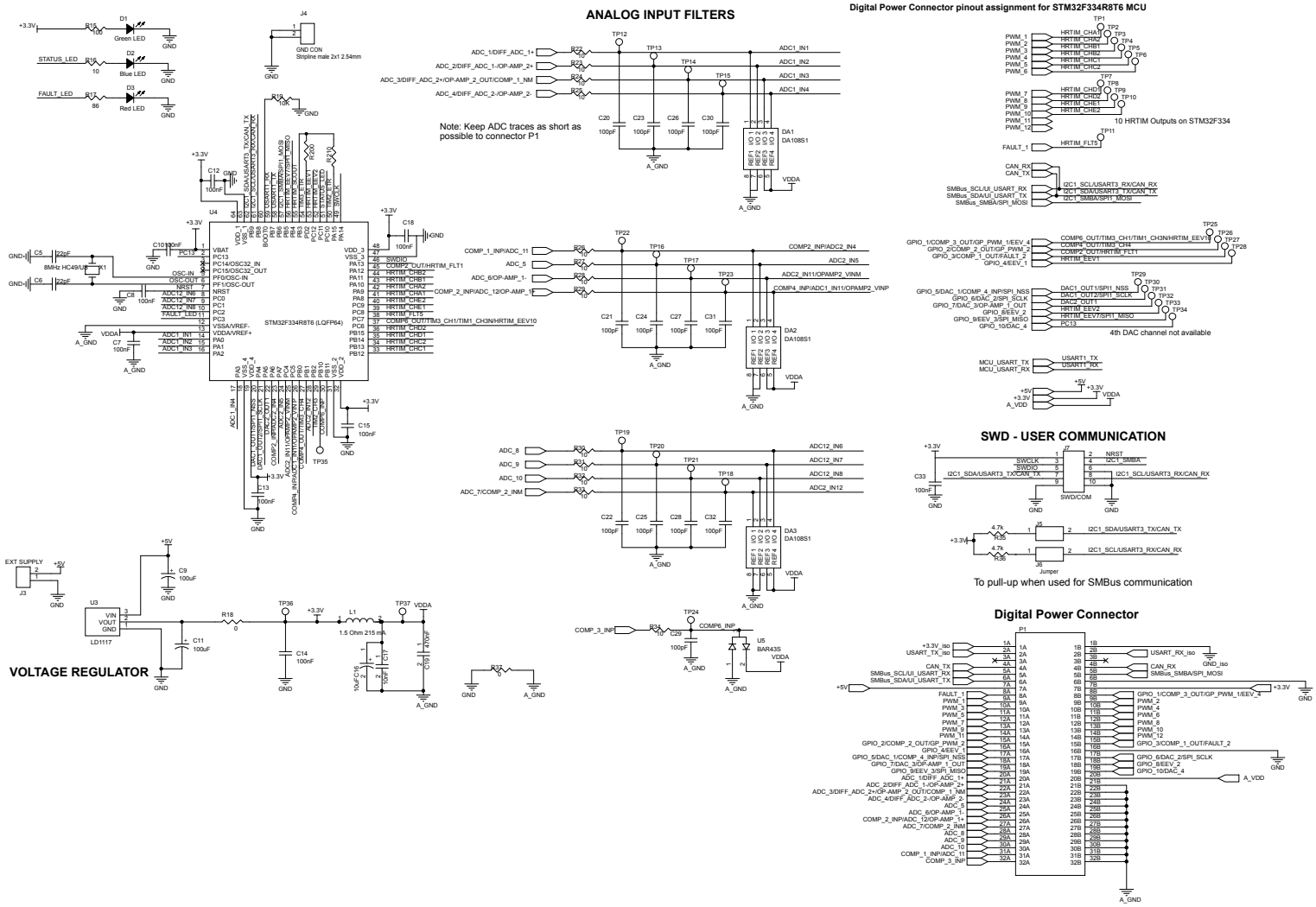

Figure 2. Control board schematic 2

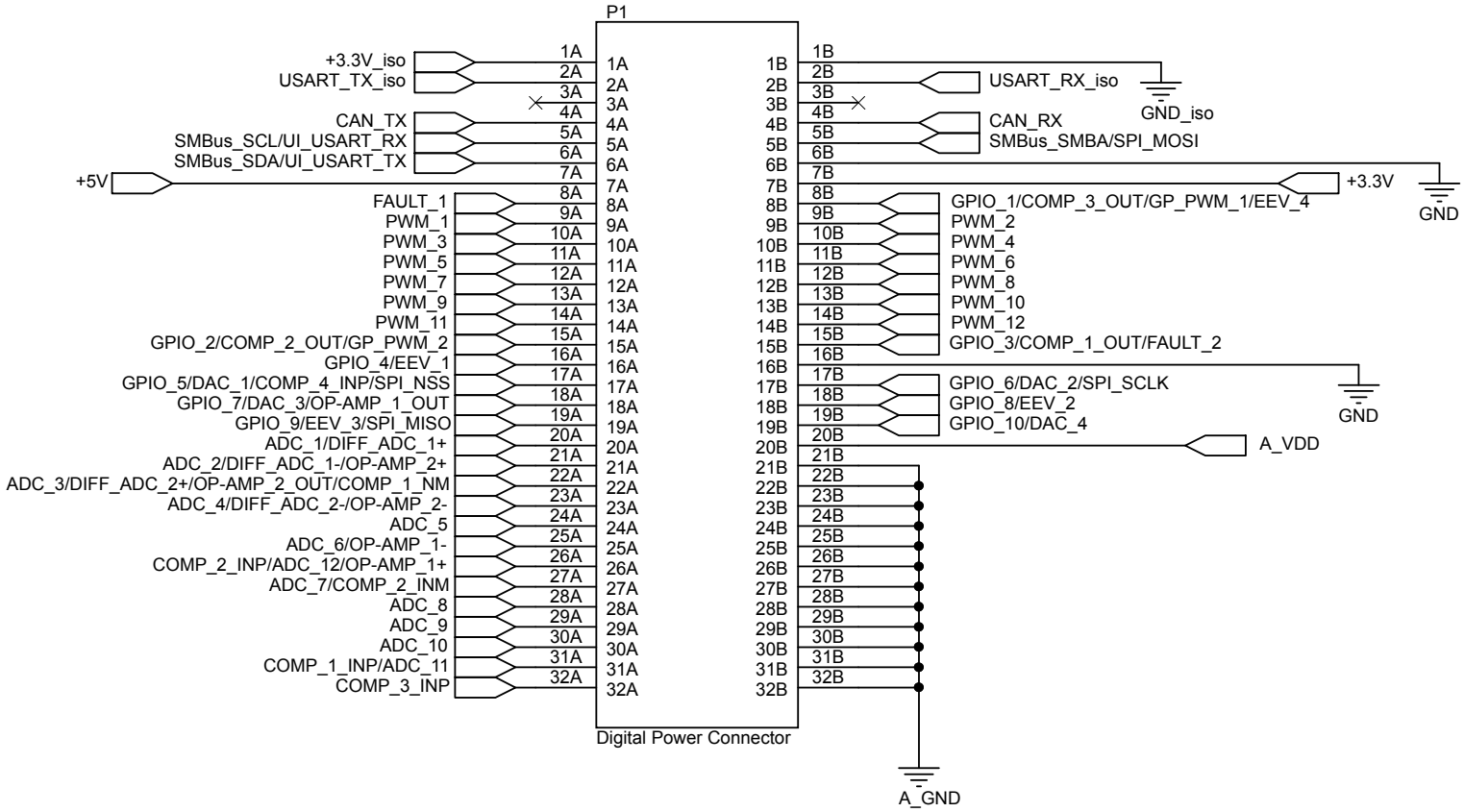

Figure 3. Control board schematic 3

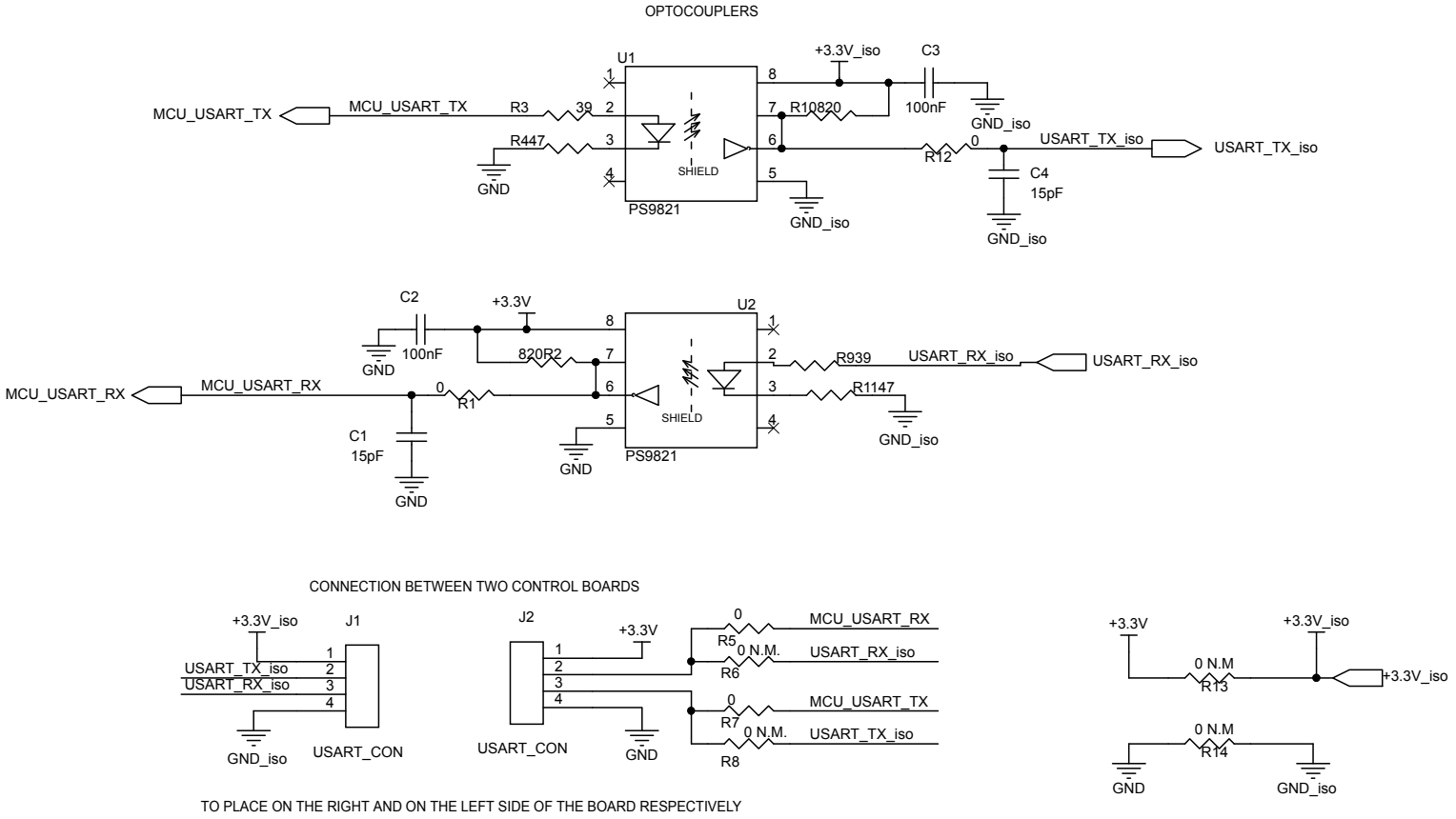

Figure 4. Adapter board schematic 1

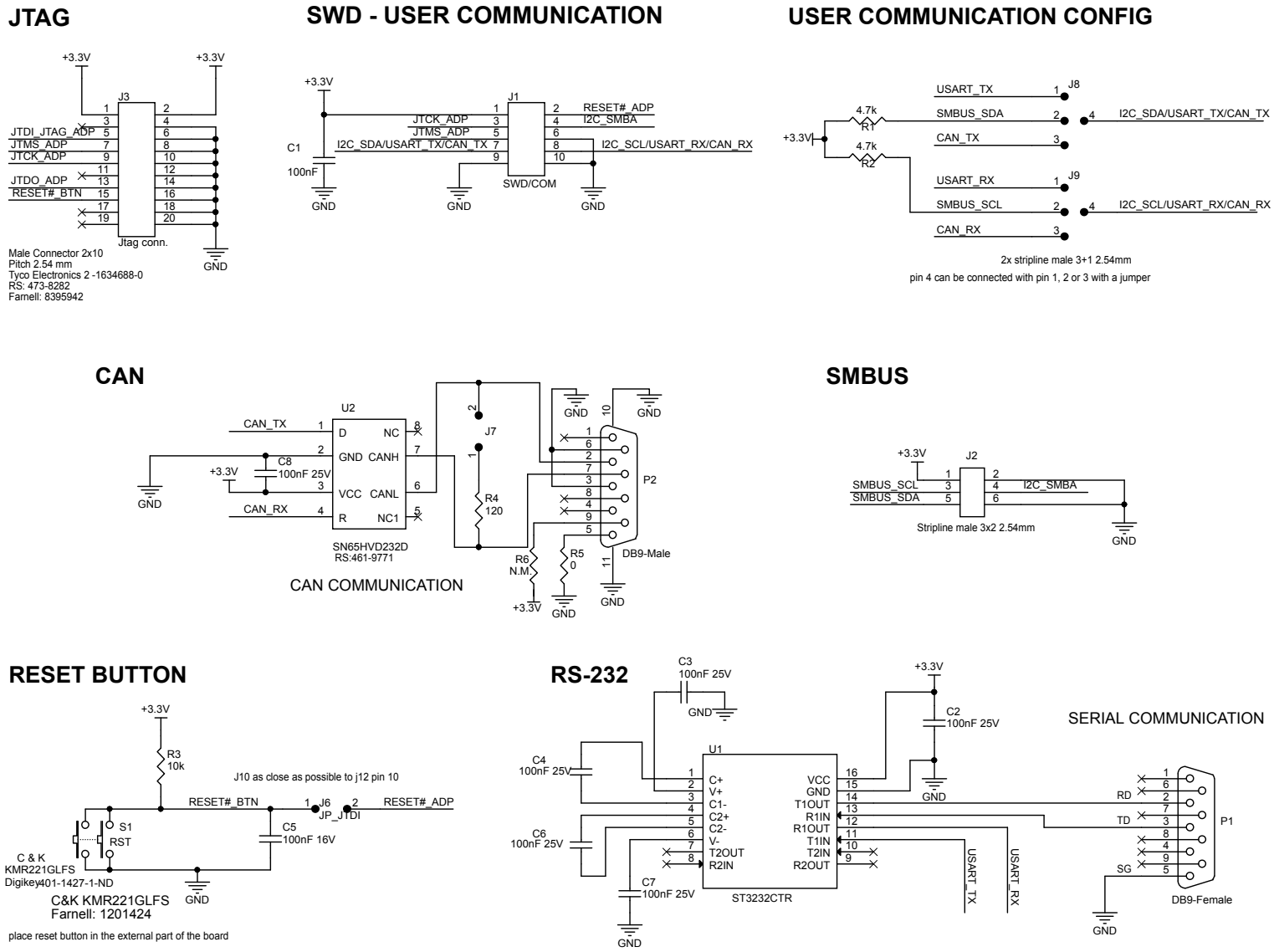

Revision history

Table 1. Document revision history

Date	Version	Changes
25-Mar-2020	1	Initial release.
11-June-2021	2	Updated cover image. Updated product summary.

IMPORTANT NOTICE – PLEASE READ CAREFULLY

STMicroelectronics NV and its subsidiaries (“ST”) reserve the right to make changes, corrections, enhancements, modifications, and improvements to ST products and/or to this document at any time without notice. Purchasers should obtain the latest relevant information on ST products before placing orders. ST products are sold pursuant to ST’s terms and conditions of sale in place at the time of order acknowledgement.

Purchasers are solely responsible for the choice, selection, and use of ST products and ST assumes no liability for application assistance or the design of Purchasers’ products.

No license, express or implied, to any intellectual property right is granted by ST herein.

Resale of ST products with provisions different from the information set forth herein shall void any warranty granted by ST for such product.

ST and the ST logo are trademarks of ST. For additional information about ST trademarks, please refer to www.st.com/trademarks. All other product or service names are the property of their respective owners.

Information in this document supersedes and replaces information previously supplied in any prior versions of this document.

© 2021 STMicroelectronics – All rights reserved