STEVAL-DIGAFEV1

Data brief

Evaluation board for the TSC1641, 16-bit, high precision current and power monitor with MIPI I3C/I2C interface

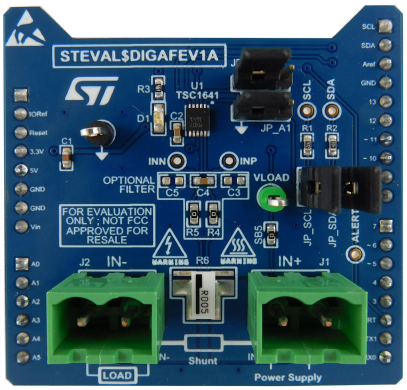

Features

- 16 bit dual channel for current, voltage, and power monitoring
- Temperature monitoring
- Simple digital connection with I²C up to 1MHz and compatible with MIPI I3C up to 12.5MHz
- From 128µs to 32.768ms total conversion time
- 2.7 to 3.6 V power supply
- Alert signals generated in case of over/under voltage, over/under current, overpower or over temperature
- Load voltage sensing from 0 to 60 V

Description

The STEVAL-DIGAFEV1 evaluation board allows the user to evaluate the performance of the TSC1641 16-bit, high precision current and power monitor with MIPI I3C/I2C interface.

The board can measure voltage up to 60 V, a load current up to 10A delivered power, and temperature based on the dual channel power monitor.

The current measurement can be high-side, low-side and bidirectional. Analog filters can be implemented on the board.

Pull ups can be enabled/disabled for I2C/I3C communication to allow consumption optimization. The relevant address can be selected on the board with jumpers.

The board is supplied ready-to-use in standalone mode, or it can be connected to a NUCLEO-L476RG or NUCLEO-H503RB board with an STM32 microcontroller, which enables further signal processing and PC communication. This product can be used with the STSW-DIGAFEV1GUI (only compatible with STM32H503RB).

Product summary	
Evaluation board for the TSC1641, 16-bit, high precision current and power monitor with MIPI I3C / I2C interface	STEVAL-DIGAFEV1
60V, 16-bit, High precision, I3C/ I2C, digital current/voltage/ power/ temperature Monitor	TSC1641IQT
STM32 Nucleo-64 development board with STM32L476RG MCU, supports Arduino and ST morpho connectivity	NUCLEO-L476RG
STM32 Nucleo-64 development board with STM32H503RBT 6 MCU, supports Arduino, ST Zio and morpho connectivity	NUCLEO-H503RB
Software for STEVAL-DIGAFEV1 evaluation kit for	STSW-DIGAFEV1GUI

Product summary	
TSC1641 configuration	
Software for STEVAL-DIGAFEV1 evaluation kit, running on NUCLEO-H503RB	STSW-DIGAFEV1FW
Applications	Industial battery packs Telecom equipment Power inverters Data Center

1 Schematic diagrams

Figure 1. STEVAL-DIGAFEV1 circuit schematic

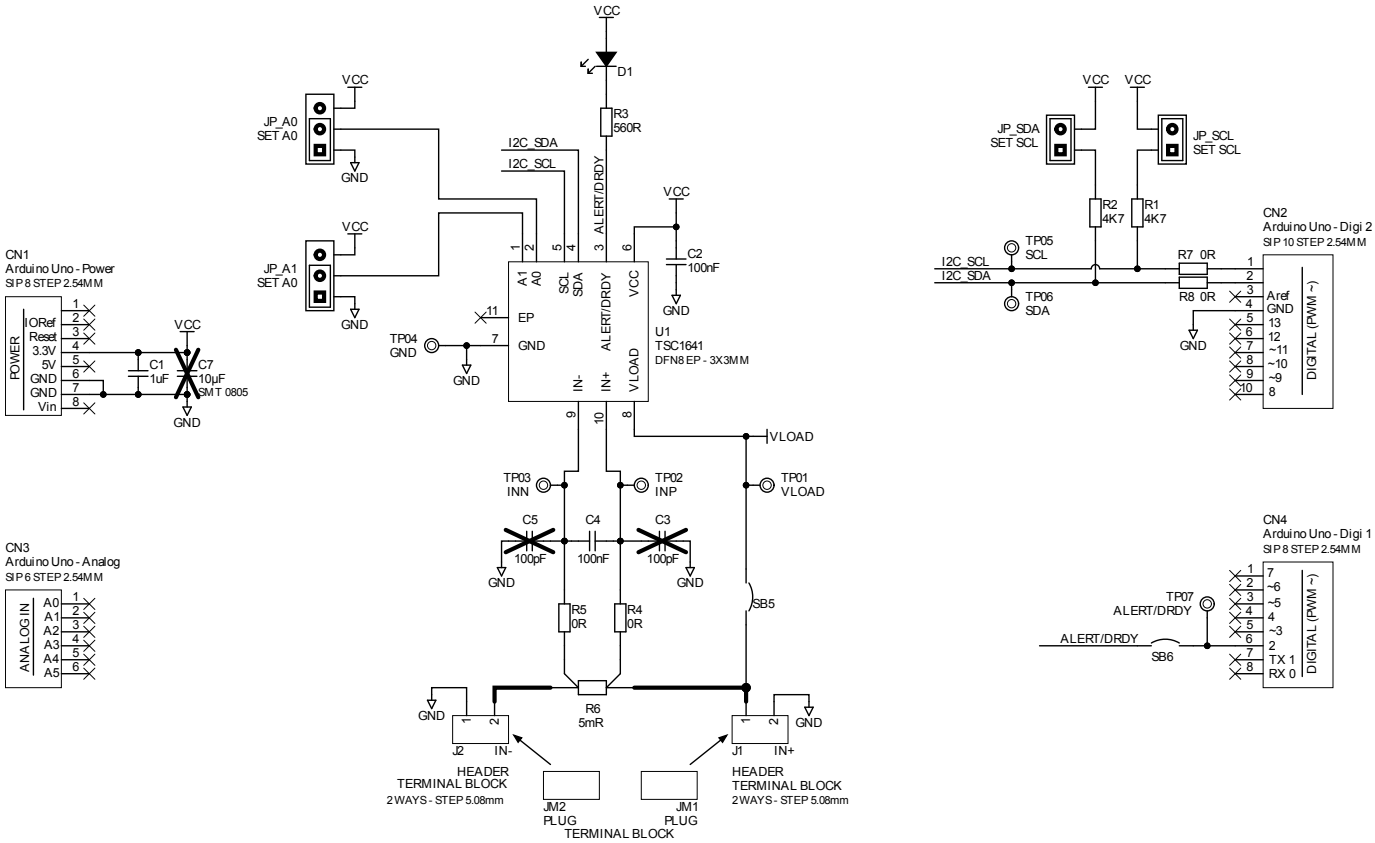

2 Board versions

Table 1. STEVAL-DIGAFEV1 versions

PCB version	Schematic diagrams	Bill of materials
STEVAL$DIGAFEV1A [1]	STEVAL$DIGAFEV1A schematic diagrams	STEVAL$DIGAFEV1A bill of materials

1. *This code identifies the STEVAL-DIGAFEV1 evaluation board first version. The STEVAL$DIGAFEV1A code is printed on the board.*

Revision history

Table 2. Document revision history

Date	Revision	Changes
07-Aug-2023	1	Initial release.
20-Feb-2024	2	Updated Description.

IMPORTANT NOTICE – READ CAREFULLY

STMicroelectronics NV and its subsidiaries (“ST”) reserve the right to make changes, corrections, enhancements, modifications, and improvements to ST products and/or to this document at any time without notice. Purchasers should obtain the latest relevant information on ST products before placing orders. ST products are sold pursuant to ST’s terms and conditions of sale in place at the time of order acknowledgment.

Purchasers are solely responsible for the choice, selection, and use of ST products and ST assumes no liability for application assistance or the design of purchasers’ products.

No license, express or implied, to any intellectual property right is granted by ST herein.

Resale of ST products with provisions different from the information set forth herein shall void any warranty granted by ST for such product.

ST and the ST logo are trademarks of ST. For additional information about ST trademarks, refer to www.st.com/trademarks. All other product or service names are the property of their respective owners.

Information in this document supersedes and replaces information previously supplied in any prior versions of this document.

© 2024 STMicroelectronics – All rights reserved