STDES-OUT03DO8

Data brief

60 V/20 A industrial octal digital output based on X-NUCLEO-OUT03A1

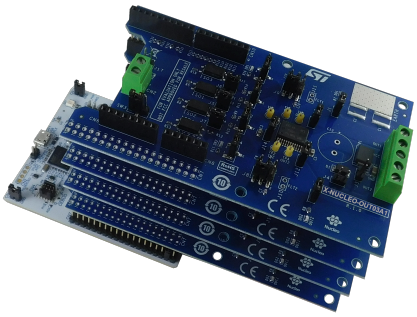

Fully assembled board developed for performance evaluation only, not available for sale

Features

- 8 to 33 V/0 to 2.5 A per-channel operating voltage range
- Extended voltage operating range (all J3 open) up to 60 V/2.5 A per channel
- Green LEDs for output on/off status
- Red LEDs for per-channel diagnostic (overload and overheating)
- 5 kV galvanic isolation
- Supply rail reverse polarity protection
- EMC compliance with IEC61000-4-2, IEC61000-4-3, IEC61000-4-4, IEC61000-4-5, IEC61000-4-8
- RoHS and WEEE compliant

Description

The STDES-OUT03DO8 is an application example for an eight-channel digital output module based on the physical stack through the Arduino connectors of up to four X-NUCLEO-OUT03A1 on a NUCLEO-F401RE running STSW-OUT3D8F4 (or on a NUCLEO-G431RB running STSW-OUT3D8G4).

Each X-NUCLEO-OUT03A1 mounts an IPS2050H and offers two independent output channels designed to drive industrial loads with current capability up to 2.5 A. The proper configuration of few resistors and jumpers enables the input signal driving and diagnostic signal monitoring of the stacked boards. The stacked boards share the same supply rail by paralleling the connection on CN1[2, 3] (supply rail +) and CN1 [4] (ground rail).

The companion software STSW-OUT3D8F4 runs on the NUCLEO-F401RE and enables the control of up to four stacked X-NUCLEO-OUT03A1 and the communication with the STSW-IFAPGUI. The STSW-OUT3D8G4, companion software designed to run on the NUCLEO-G431RB, ensures the same functionalities and interfacing capabilities.

The STDES-OUT03DO8 is a fully assembled kit developed for performance evaluation only, not available for sale.

Product summary	
60 V/20 A industrial octal digital output based on X-NUCLEO-OUT03A1	STDES-OUT03DO8
Firmware for STDES-OUT03DO8 and STDES-OUT04DO8 on NUCLEO-F401RE	STSW-OUT3D8F4
Firmware for STDES-OUT03DO8 and STDES-OUT04DO8 on NUCLEO-G431RB	STSW-OUT3D8G4
Industrial digital output expansion board based on IPS2050H for STM32 Nucleo	X-NUCLEO-OUT03A1
High efficiency, high-side switch with extended diagnostics and smart driving for capacitive loads	IPS2050H
Applications	Industrial Safety Industrial Tools

1 Multiple-board configuration

You can stack one, two, three, or four X-NUCLEO-OUT03A1 on a NUCLEO-F401RE (or on a NUCLEO-G431RB) to evaluate a dual, quad, six, or eight-channel digital output module.

The expansion boards (board 0, 1, 2, 3 as shown in Table 1) must be properly configured. No configuration is needed for board 0. For board 1, 2, and 3, instead, unsolder four resistors for each board from the default position. Then, solder them back in an alternate position according to Table 1.

When using board 2 and board 3, you have to use two jumpers to close the morpho connectors pins in the STM32 Nucleo board: CN7.35-36 and CN10.25-26 closed.

Table 1. Per-board configuration of jumpers and resistors

Board 0	Board 1	Board 2	Board 3
R101	R131	R111	R121
R102	R132	R112	R122
R103	R133	R113	R123
R104	R134	R114	R124

For the resistor position on the expansion board, refer to the schematic diagrams below.

Figure 1. X-NUCLEO-OUT03A1 circuit schematic (1 of 2)

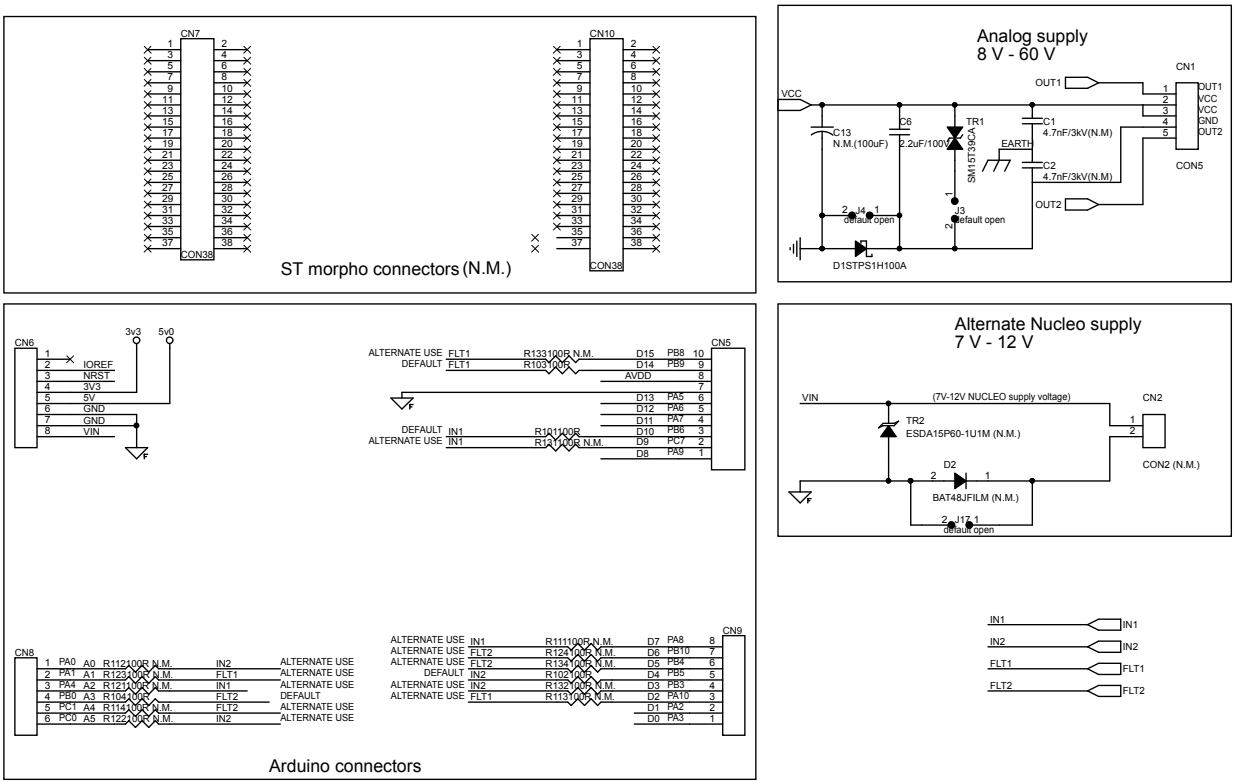

Figure 2. X-NUCLEO-OUT03A1 circuit schematic (2 of 2)

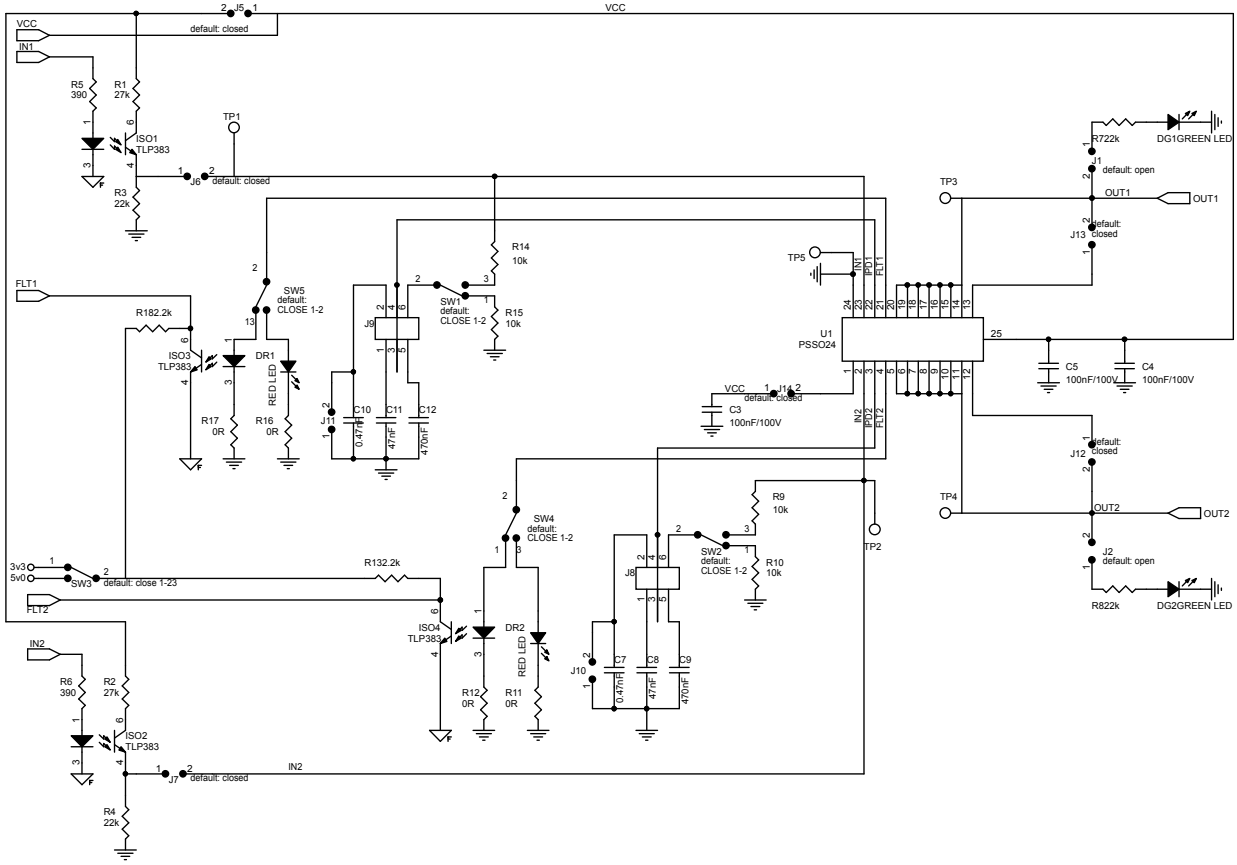

2 Schematic diagrams

Note: The STDES-OUT03DO8 consists of a stack of up to four X-NUCLEO-OUT04A1 expansion boards and a NUCLEO-F401RE or a NUCLEO-G431RB. You can find their detailed schematic diagrams at the related web pages:

- *X-NUCLEO-OUT03A1 schematic diagrams*
- *NUCLEO-F401RE schematic diagrams*
- *NUCLEO-G431RB schematic diagrams*

Revision history

Table 2. Document revision history

Date	Revision	Changes
12-Apr-2022	1	Initial release.

IMPORTANT NOTICE – READ CAREFULLY

STMicroelectronics NV and its subsidiaries (“ST”) reserve the right to make changes, corrections, enhancements, modifications, and improvements to ST products and/or to this document at any time without notice. Purchasers should obtain the latest relevant information on ST products before placing orders. ST products are sold pursuant to ST’s terms and conditions of sale in place at the time of order acknowledgment.

Purchasers are solely responsible for the choice, selection, and use of ST products and ST assumes no liability for application assistance or the design of purchasers’ products.

No license, express or implied, to any intellectual property right is granted by ST herein.

Resale of ST products with provisions different from the information set forth herein shall void any warranty granted by ST for such product.

ST and the ST logo are trademarks of ST. For additional information about ST trademarks, refer to www.st.com/trademarks. All other product or service names are the property of their respective owners.

Information in this document supersedes and replaces information previously supplied in any prior versions of this document.

© 2022 STMicroelectronics – All rights reserved