EVLVIPGAN50WP: 45W USB PD adaptor reference design with VIPERGAN50W

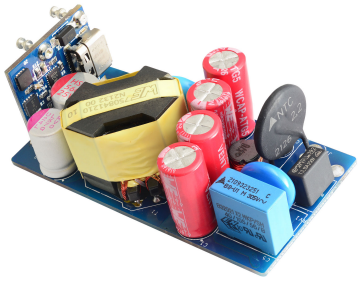

Product status link
EVLVIPGAN50WP
VIPERGAN50W
STUSB4761
SRK1001

Product summary	
45W USB PD adapter	EVLVIPGAN50WP
Energy saving offline High Voltage Converter with 700 V GAN power	VIPERGAN50W
Stand-alone USB PD controller (with integrated CC/CV)	STUSB4761
Adaptive synchronous rectification controller for flyback converter	SRK1001
Applications	USB Type-C PD

Features

- Input voltage range: Universal AC from 90 to 264 VAC with 47 Hz to 63 Hz inpu line frequency
- Output voltage: 5 V, 9 V, 12 V, 15 V, 20 V
- Output current: 3 A @5 V, 9 V, 12 V, 15 V – 2.25 A @ 20 V
- Maximum output power: 45 W
- Efficiency standards: Meet CoC Tier 2 and DoE Level 6 efficiency requirements
- Peak efficiency: > 92 %
- Support for USB-PD, Type C output connector
- Meets IEC55022 Class B conducted EMI
- Key products: VIPerGaN50W, STUSB4761, SRK1001

Application

- AC-DC smart chargers for smartphones, tablets, laptops and other handheld equipment

Description

The EVLVIPGAN50WP 45 W USB Type-C® Power Delivery 3.0 adapter is a USBPD reference design solution. It is an isolated power supply based on the VIPERGAN50W, a new offline high-voltage converter from the VIPERGAN family with a 700 V HEMT Power GaN transistor, designed for quasi-resonant flyback converters, capable of providing an output power up to 50 W in wide range.

At the secondary side, to increase the system efficiency, the rectification is based on the SRK1001 adaptive synchronous rectification controller.

Still on the secondary side, the CC/CV regulation loop to drive the power regulation stage and the USB Type-C® PD interface is based on the STUSB4761 controller. This controller offers the benefits of a full hardware USB PD stack allowing robust, deterministic and safe negotiation in line with USB PD standard.

The evaluation board implements a robust adapter protected for output overvoltage, output undervoltage, output over power and output short-circuit. This reference design, based on STMicroelectronics semiconductors, helps designers to develop adapters with a short bill of materials to obtain a cost-effective and fast design.

1 Electrical characteristics

Table 1. Electrical characteristics

Symbol	Parameter	Test Conditions	Min.	Nom.	Max.	Unit
Input parameters						
V_{IN}	Input line voltage		90	115 / 230	264	Vrms
f_{LINE}	Input line frequency		47	50 / 60	63	Hz
P_{STBY}	No load input power-5 Vout			40		mW
P_{STBY}	No load input power-9 Vout			60		mW
P_{STBY}	No load input power-12 Vout			80		mW
P_{STBY}	No load input power-15 Vout			100		mW
P_{STBY}	No load input power-20 Vout			140		mW
Output parameters-5 V setting						
V_{OUT}	Output voltage	V_{IN}= 90 V_{RMS}~264 V_{RMS} I_{OUT} = 0 A~3 A		5		V
I_{OUT}	Output current		0		3	A
Output parameters-9 V setting						
V_{OUT}	Output voltage	V_{IN} = 90 V_{RMS}~264 V_{RMS} I_{OUT} = 0 A~3 A		9		V
I_{OUT}	Output current		0		3	A
Output parameters-12 V setting						
V_{OUT}	Output voltage	V_{IN} = 90 V_{RMS}~264 V_{RMS} I_{OUT} = 0 A~3 A		12		V
I_{OUT}	Output current		0		3	A
Output parameters-15 V setting						
V_{OUT}	Output voltage	V_{IN} = 90 V_{RMS}~264 V_{RMS} I_{OUT} = 0 A~3 A		15		V
I_{OUT}	Output current		0		3	A
Output parameters-20 V setting						
V_{OUT}	Output voltage	V_{IN} = 90 V_{RMS}~264 V_{RMS} I_{OUT} = 0 A~2.25 A		20		V
I_{OUT}	Output current		0		2.25	A
Ambient parameters						
T_{AMB}	Ambient temperature	Free convection	0		40	°C

2 Schematic diagram

Figure 1. EVLVIPGAN50WP schematic (main board)

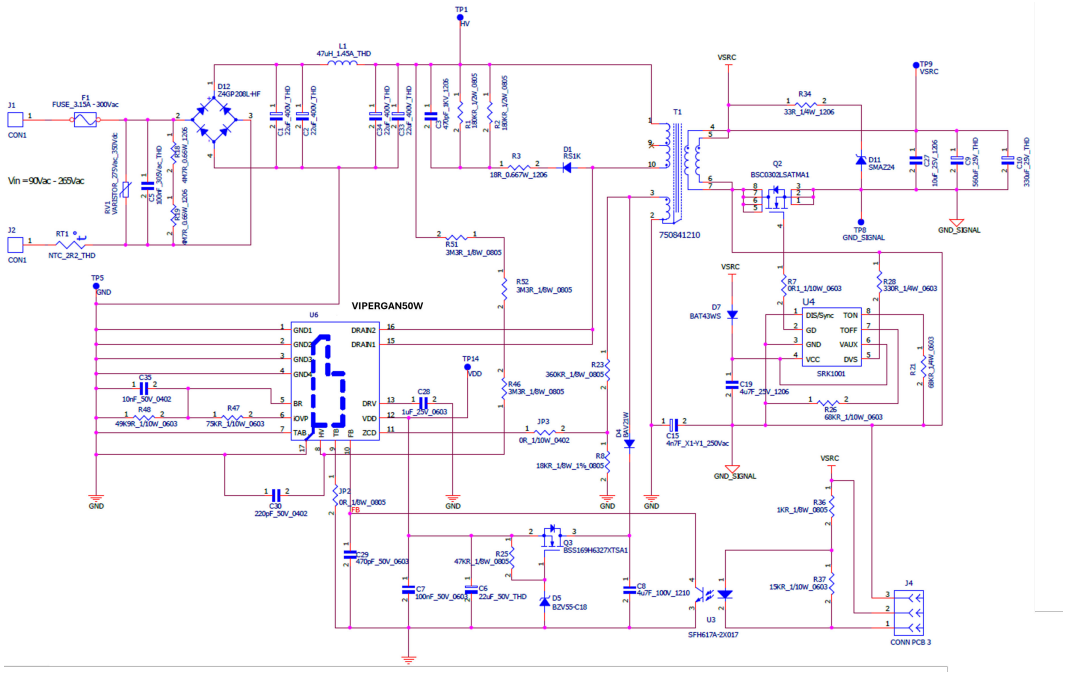

Figure 2. EVLVIPGAN50WP schematic (daughter board)

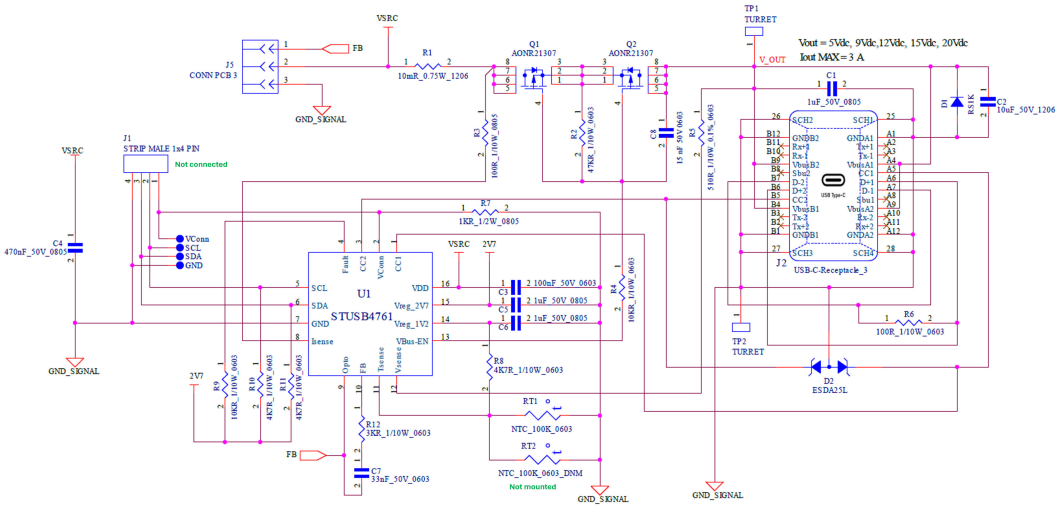

3 Efficiency

Figure 3. Efficiency @115 V_{AC}

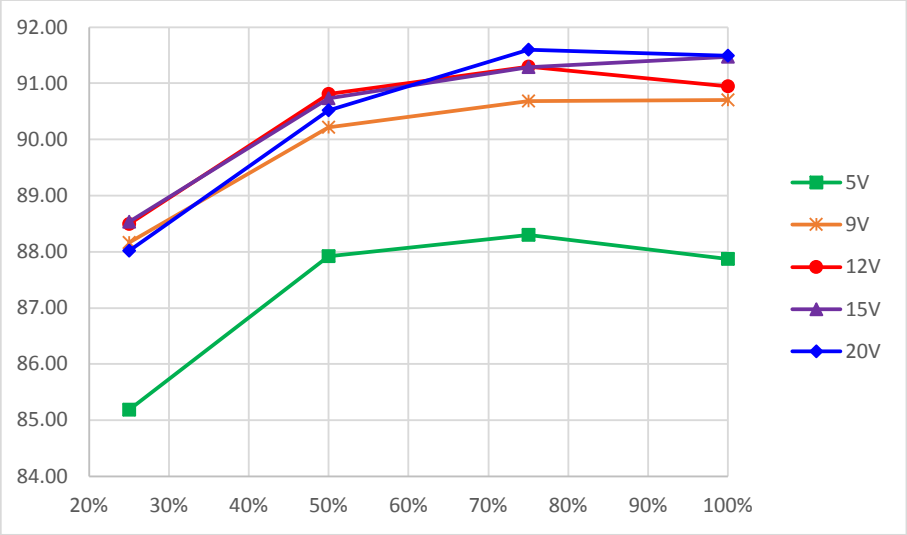

Figure 4. Efficiency @230 V_{AC}

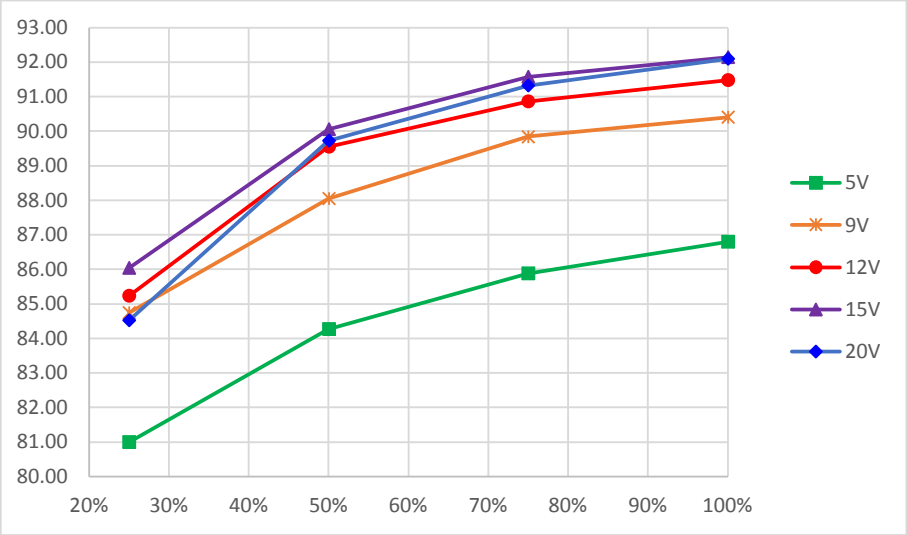

Revision history

Table 2. Document revision history

Date	Version	Changes
23-Mar-2026	1	Initial release.

Contents

1 Electrical characteristics 2
2 Schematic diagram 3
3 Efficiency 4
Revision history 5
List of tables 7
List of figures 8

List of tables

Table 1. Electrical characteristics 2
Table 2. Document revision history 5

List of figures

Figure 1. EVLVIPGAN50WP schematic (main board) . . . 3
Figure 2. EVLVIPGAN50WP schematic (daughter board) . . . 3
Figure 3. Efficiency @115 V_{AC} . . . 4
Figure 4. Efficiency @230 V_{AC} . . . 4

IMPORTANT NOTICE – READ CAREFULLY

STMicroelectronics NV and its subsidiaries (“ST”) reserve the right to make changes, corrections, enhancements, modifications, and improvements to ST products and/or to this document at any time without notice.

In the event of any conflict between the provisions of this document and the provisions of any contractual arrangement in force between the purchasers and ST, the provisions of such contractual arrangement shall prevail.

The purchasers should obtain the latest relevant information on ST products before placing orders. ST products are sold pursuant to ST’s terms and conditions of sale in place at the time of order acknowledgment.

The purchasers are solely responsible for the choice, selection, and use of ST products and ST assumes no liability for application assistance or the design of the purchasers’ products.

No license, express or implied, to any intellectual property right is granted by ST herein.

Resale of ST products with provisions different from the information set forth herein shall void any warranty granted by ST for such product.

If the purchasers identify an ST product that meets their functional and performance requirements but that is not designated for the purchasers' market segment, the purchasers shall contact ST for more information.

ST and the ST logo are trademarks of ST. For additional information about ST trademarks, refer to www.st.com/trademarks. All other product or service names are the property of their respective owners.

Information in this document supersedes and replaces information previously supplied in any prior versions of this document.

© 2026 STMicroelectronics – All rights reserved