AEK-MCU-C4MINI1

Data brief

All-in-one, fast-prototyping, user-friendly MCU and motor control evaluation board based on the Chorus SPC58EC80E5 automotive microcontroller

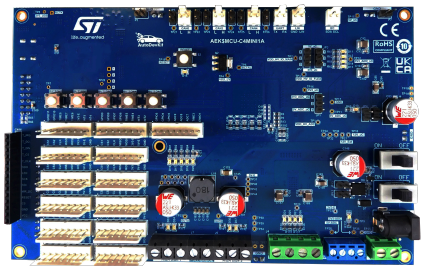

AutoDevKit

Product summary	
All-in-one, fast-prototyping, user-friendly MCU and motor controlevaluation board based on the Chorus SPC58EC80E5 automotive microcontroller	AEK-MCU-C4MINI1
32-bit Power Architecture MCU for Automotive General Purpose Applications - Chorus family	SPC58EC80E5QMC1X
Automotive dual monolithic switching regulator with LDO and HSD	L5963DN-EHT
Automotive fully integrated H-bridge motor driver	VNH7040AYTR
Double-channel HSD with Current Sense analog feedback	VND7E040AJTR
Display expansion board with resistive touch for Chorus family	AEK-LCD-DT028V1

Features

- SPC58EC80E5 microcontroller: 32-bit Power Architecture e200z4d dual core, 4224 kB flash + 128 kB data flash in eTQFP144 package
- Integrated programmer and debugger (1 USB virtual COM port and JTAG)
- 3 integrated CAN FD transceivers
- 1 integrated LIN transceiver
- 5 user push buttons and 5 generic LEDs
- Reset button
- 5 connectors (8 pins each) with pre-allocated GPIOs, ADCs and signals
- 6 SPI ports (two CS each)
- 9 ADCs
- 5 interrupts
- 11 GPIOs
- 8 timers
- 2 enhanced modular IO subsystems (eMIOS) that feature:
  - Generation or measurement of time events on up to 2 x 32 timed I/O channels with 16-bit counter resolution
  - Support for configurable trigger outputs for ADC conversion for synchronization with channel output waveforms
  - Shared or independent time bases
  - Motor control capability
- 3 connectors for serial communication:
  - I2C
  - LIN
  - UART
- Reverse battery-protection dedicated circuit
- 2 dedicated connectors, one on each side of the board, to plug the AEK-LCD-DT028V1 display board
- 1 VNH7040AY integrated H-bridge motor driver for DC motors
- 2 VND7E040AJ double channel high-side drivers
- 2 L5963 integrated DC-DC converters: one for internal power supply and one for external power supply up to 2.75 A (5 V and 3.3 V)
- 2 connectors for 12 V power supply
- Compact size: 165 mm x 105 mm
- Included in the AutoDevKit ecosystem

Description

The AEK-MCU-C4MINI1 offers more than a standard MCU board. Leveraging on a user-friendly interface, it allows fast ECU prototyping with basic motor control drives, serial communication ports and LCD resistive display dual connection.

Product summary	
AutoDevKit Studio for 32-bit power architecture MCUs	STSW-AUTODEVKIT
Applications	DC motor control Automotive resistive, inductive, and capacitive loads Domain and zone controllers Automotive gateways General purpose Automotive MCU boards

The AEK-MCU-C4MINI1 is designed to address Automotive and Transportation applications as well as other applications requiring automotive safety and security levels. A cryptography dedicated MCU core, employed as hardware secure module (HSM), is paired with dual 180 MHz general-purpose 32-bit cores, all hosted by the on board SPC58EC80E5 MCU, featuring a total 4 MB of flash memory.

The board layout has been conceived to speed up the user development thus offering an easy prototyping evaluation tool.

The general-purpose and serial connectors have been standardized and grouped by peripheral function types.

The MCU peripherals are extended with the VNH7040AY embedded H-bridge motor driver for DC motor control, featuring advanced diagnostic features (short-to-ground, short-to-battery, and open load conditions). The board has a dedicated supply capacity for an external 5 V or 3.3 V load with maximum current capability of 2.75 A.

The AEK-MCU-C4MINI1 allows plugging an AEK-LCD-DT028V1 touch display board for multiple application and debug purposes, such as monitoring the motor current, printing serial data, or for hardware debugging, without the need of connecting any PC terminal console. For this LCD board, two connectors are provided on the board, one on the top and one on the bottom. The two connectors shall not be connected and used at the same time.

The top connection facilitates the debugging phase (for example, when testing signal connections and data exchange), while the bottom one reduces the total occupied space by the two boards, making it the preferred choice for deployment purposes.

The MCU ADC reference voltage is provided by a stable linear voltage regulator (LDO) embedded in the L5963 IC.

The board hosts an OpenOCD debugger/programmer, several MCU peripheral connectors as well as various general-purpose buttons and LEDs.

For system reset during the development phase, a reset button was added to the board layout. In addition, a reverse battery protection circuit has been integrated for higher safety.

1 Block diagram

Figure 1. AEK-MCU-C4MINI1 block diagram (top view)

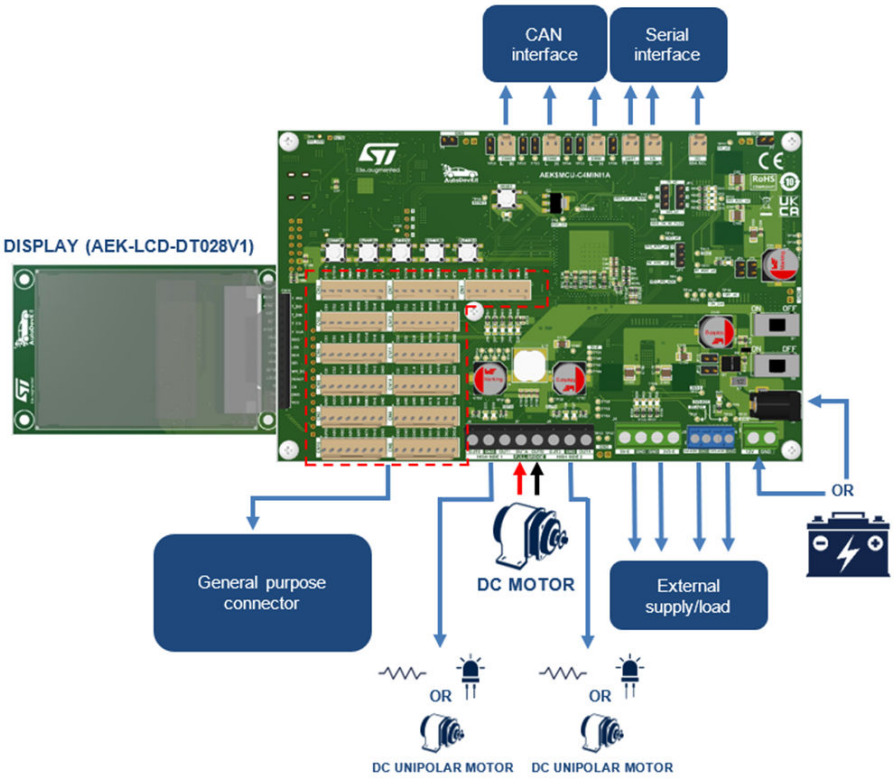

Figure 2. AEK-MCU-C4MINI1 block diagram (bottom view)

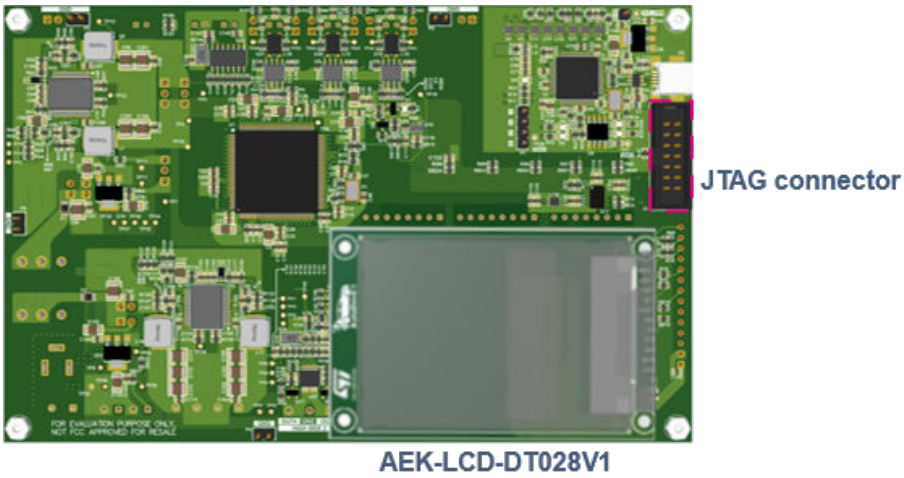

2 Schematic diagrams

Figure 3. AEK-MCU-C4MINI1 circuit schematic (1 of 12)

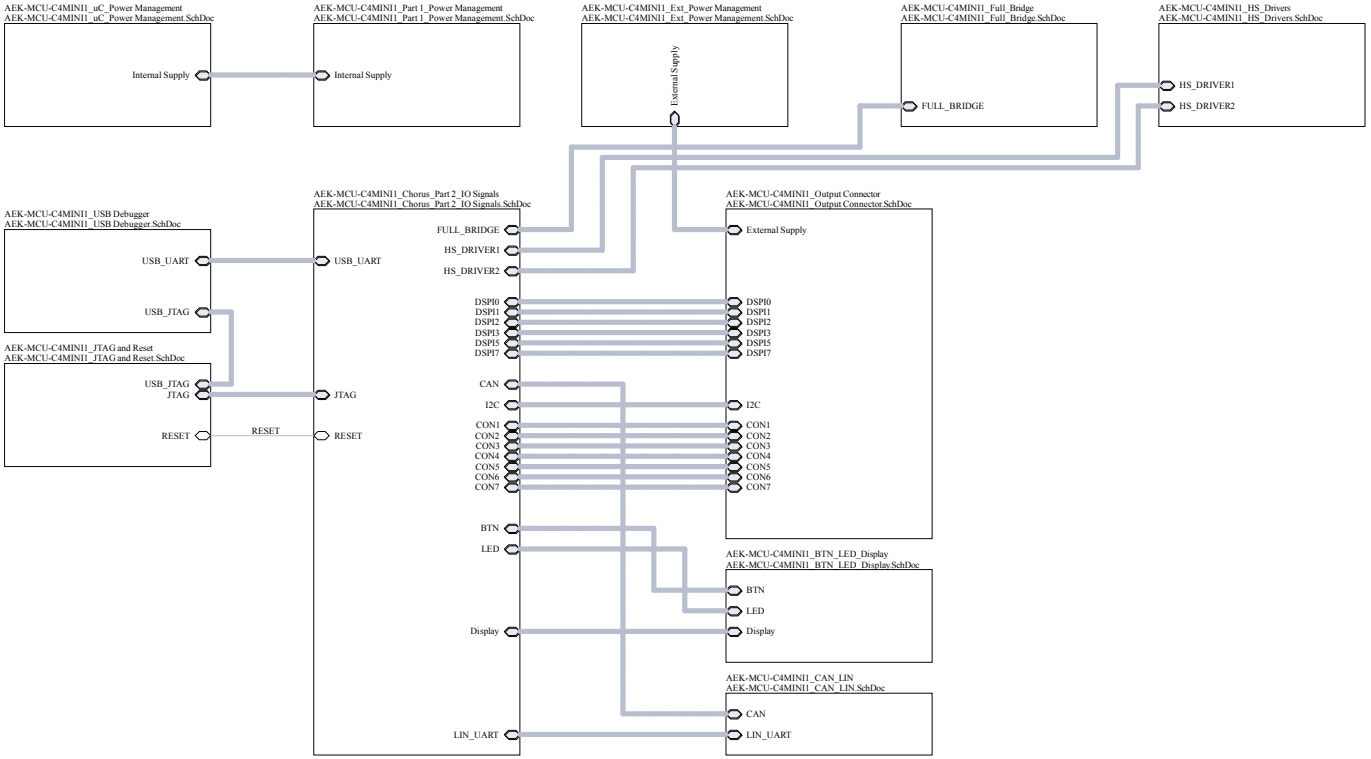

Figure 4. AEK-MCU-C4MINI1 circuit schematic (2 of 12)

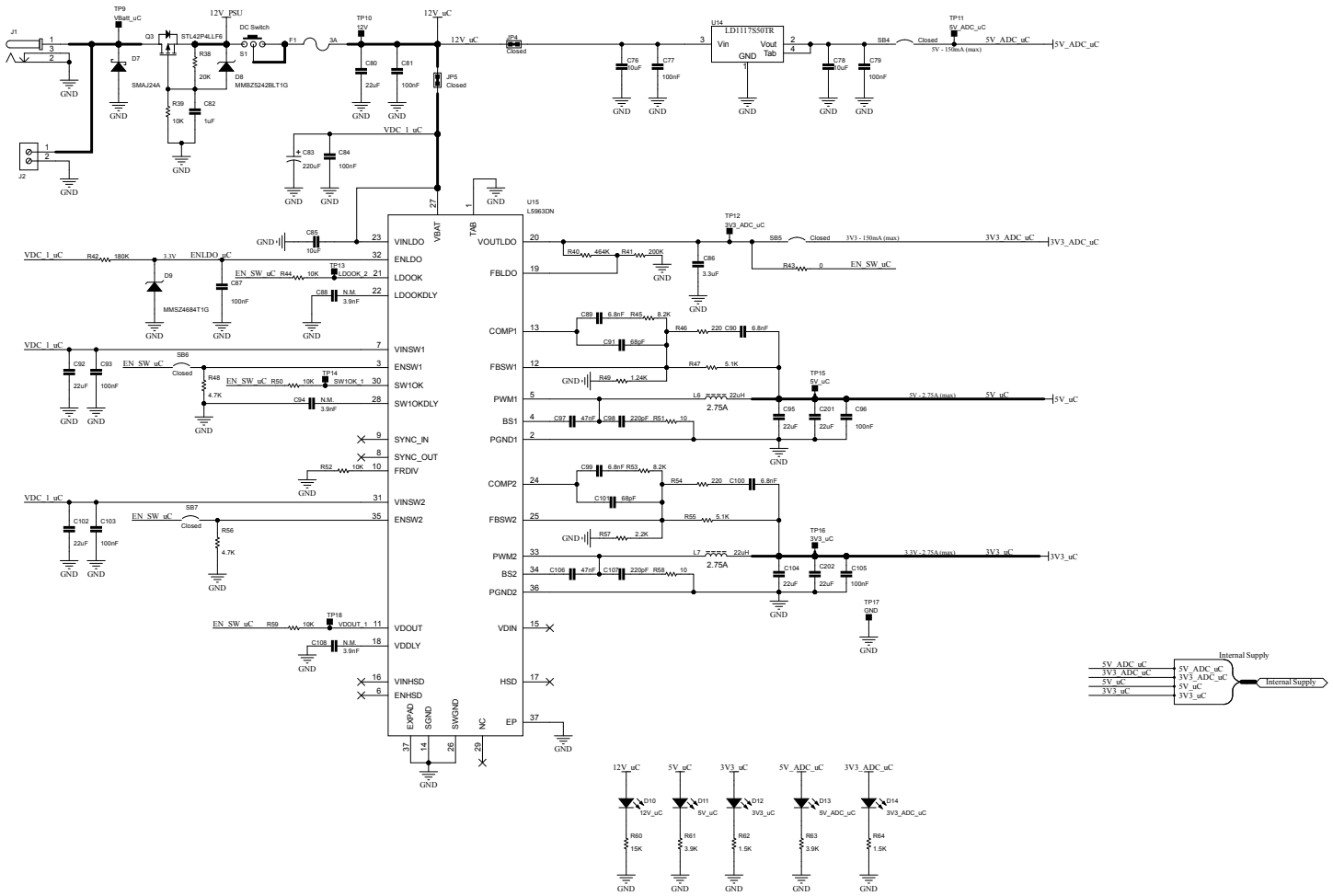

Figure 5. AEK-MCU-C4MINI1 circuit schematic (3 of 12)

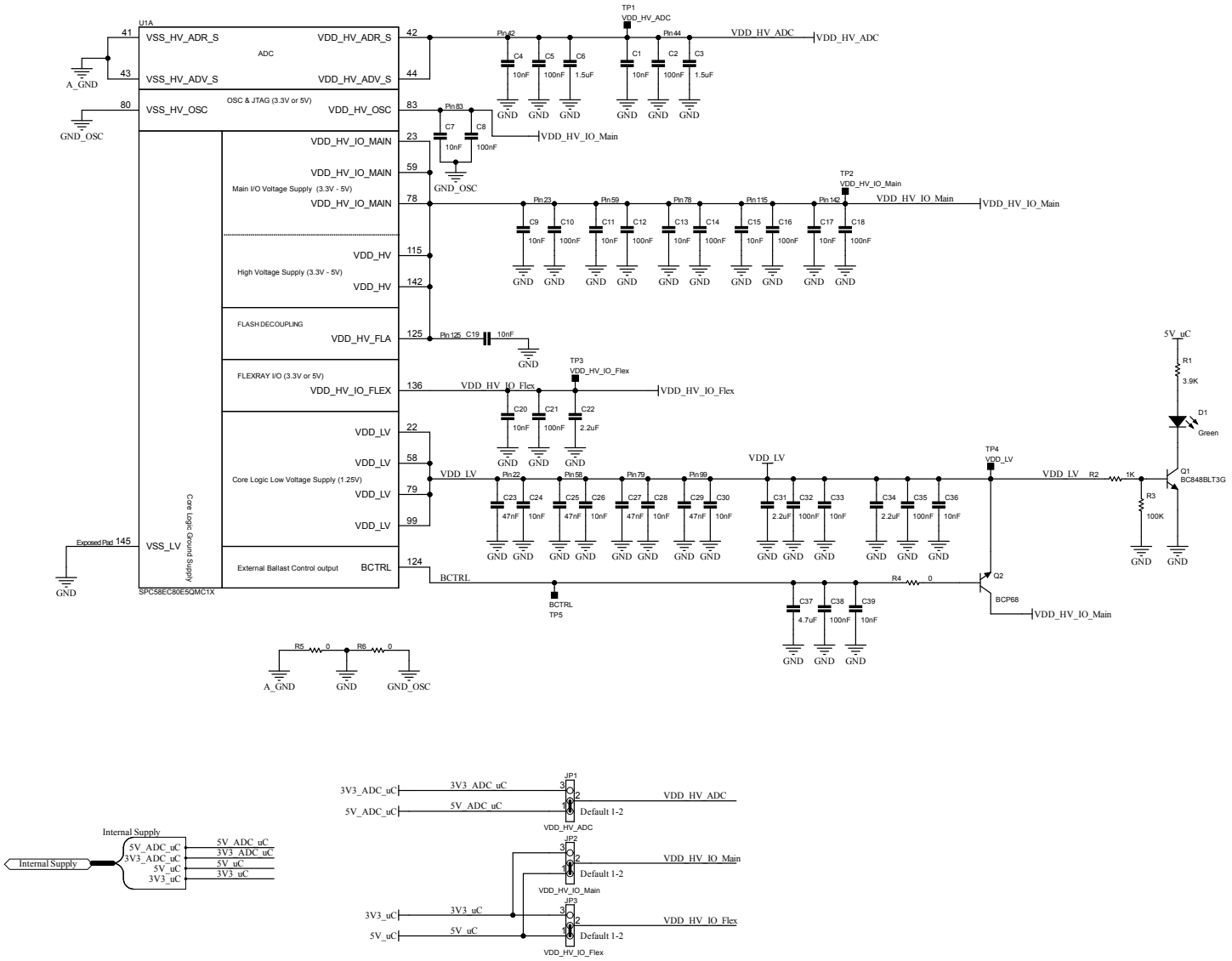

Figure 6. AEK-MCU-C4MINI1 circuit schematic (4 of 12)

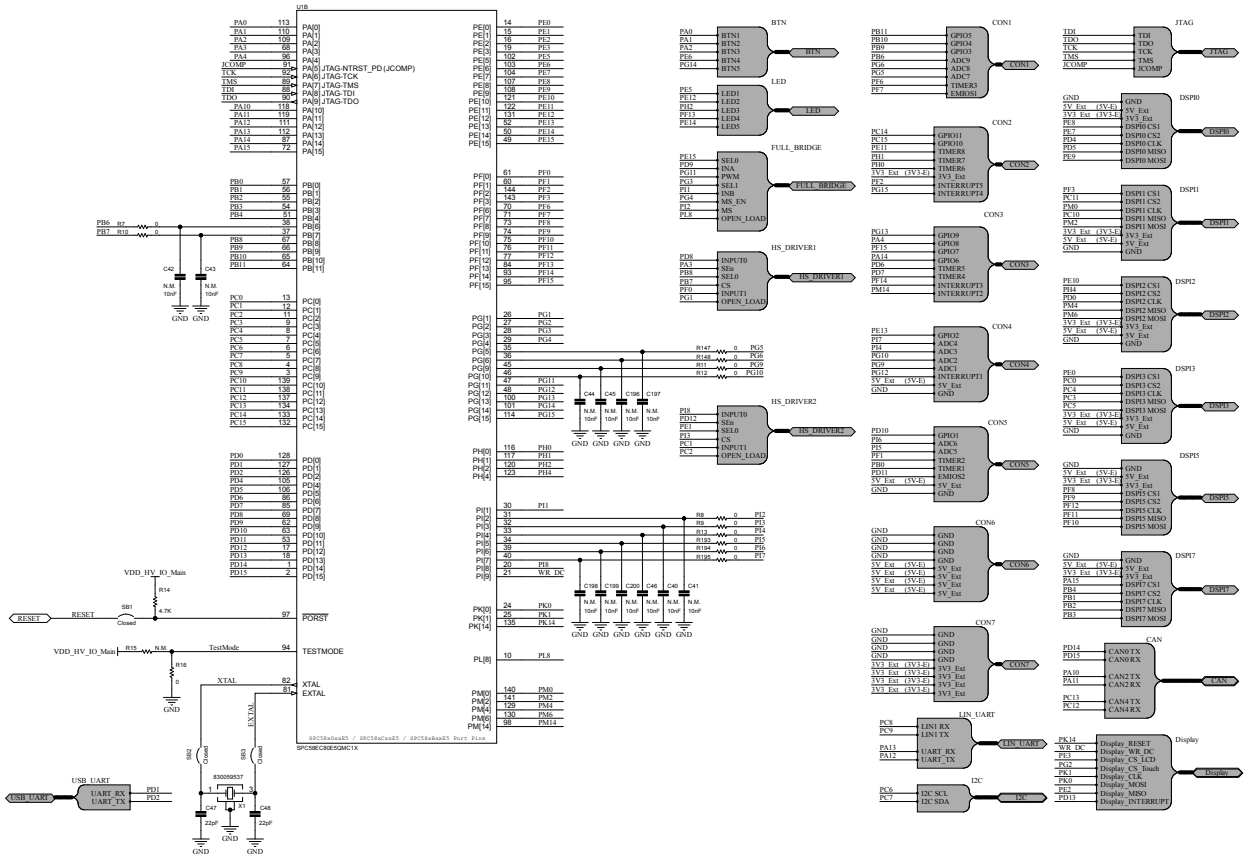

NOTE: It is highly recommended to connect the test mode pin directly to ground to ensure the MCU correct functioning.

Figure 7. AEK-MCU-C4MINI1 circuit schematic (5 of 12)

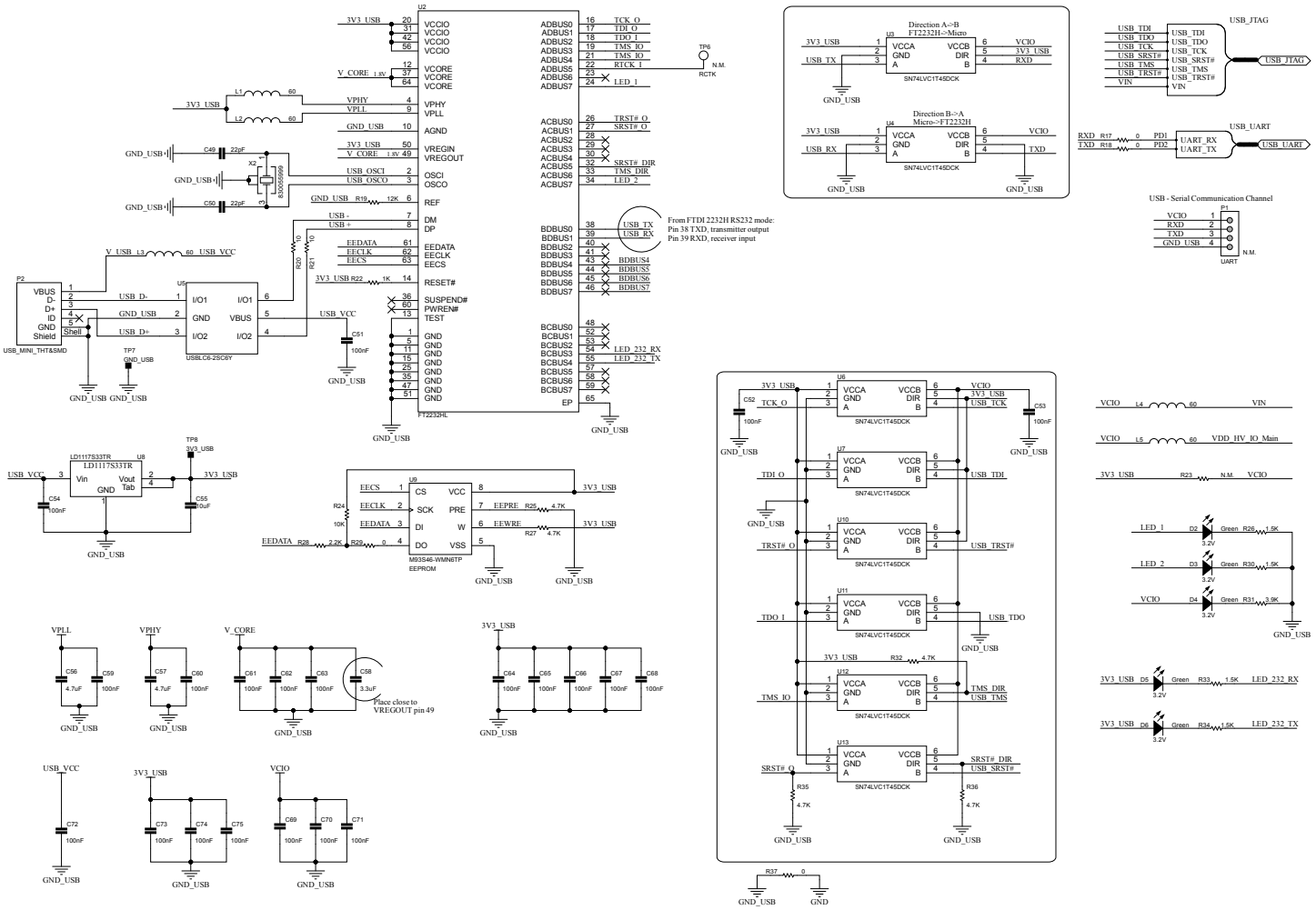

Figure 8. AEK-MCU-C4MINI1 circuit schematic (6 of 12)

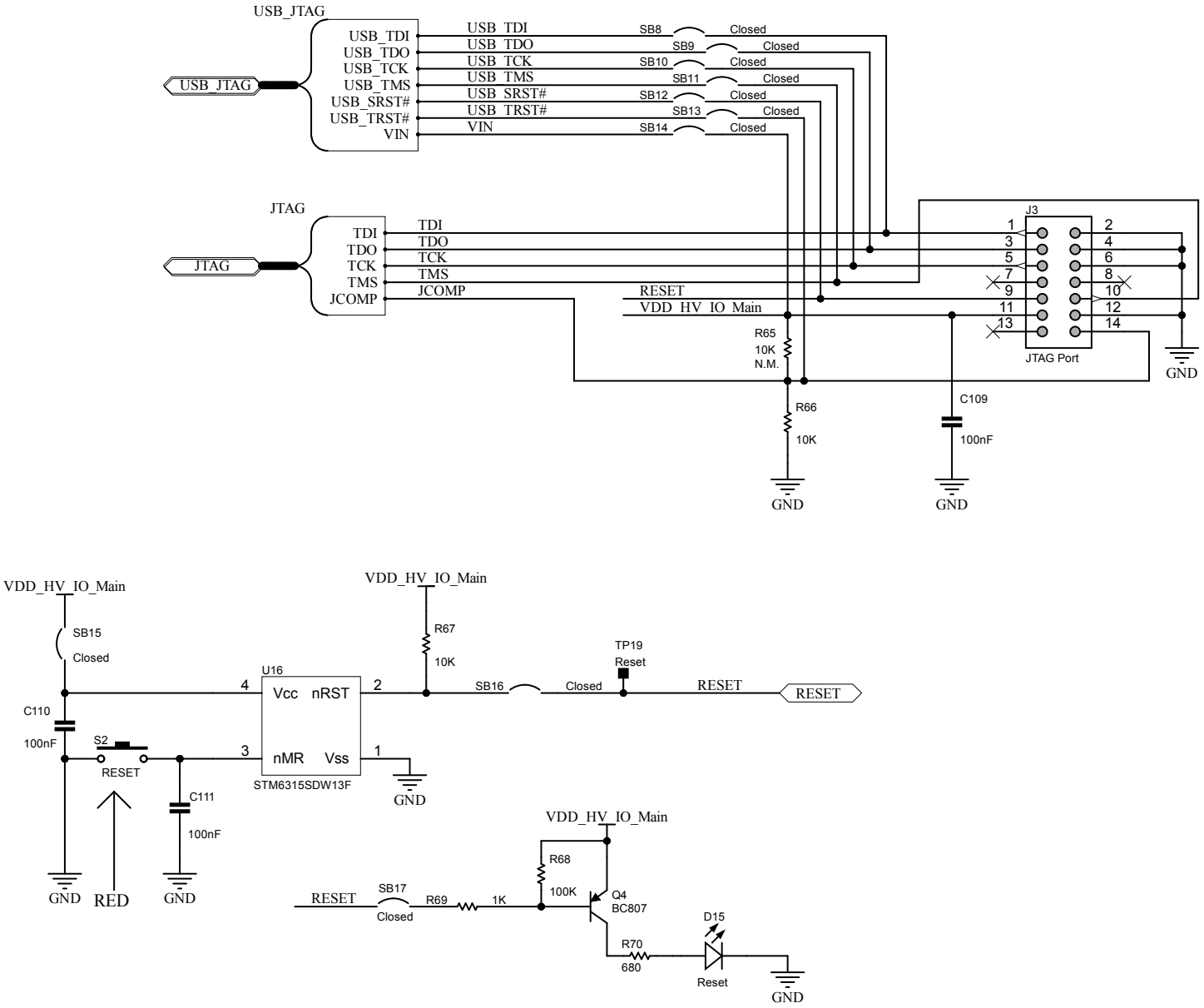

Figure 9. AEK-MCU-C4MINI1 circuit schematic (7 of 12)

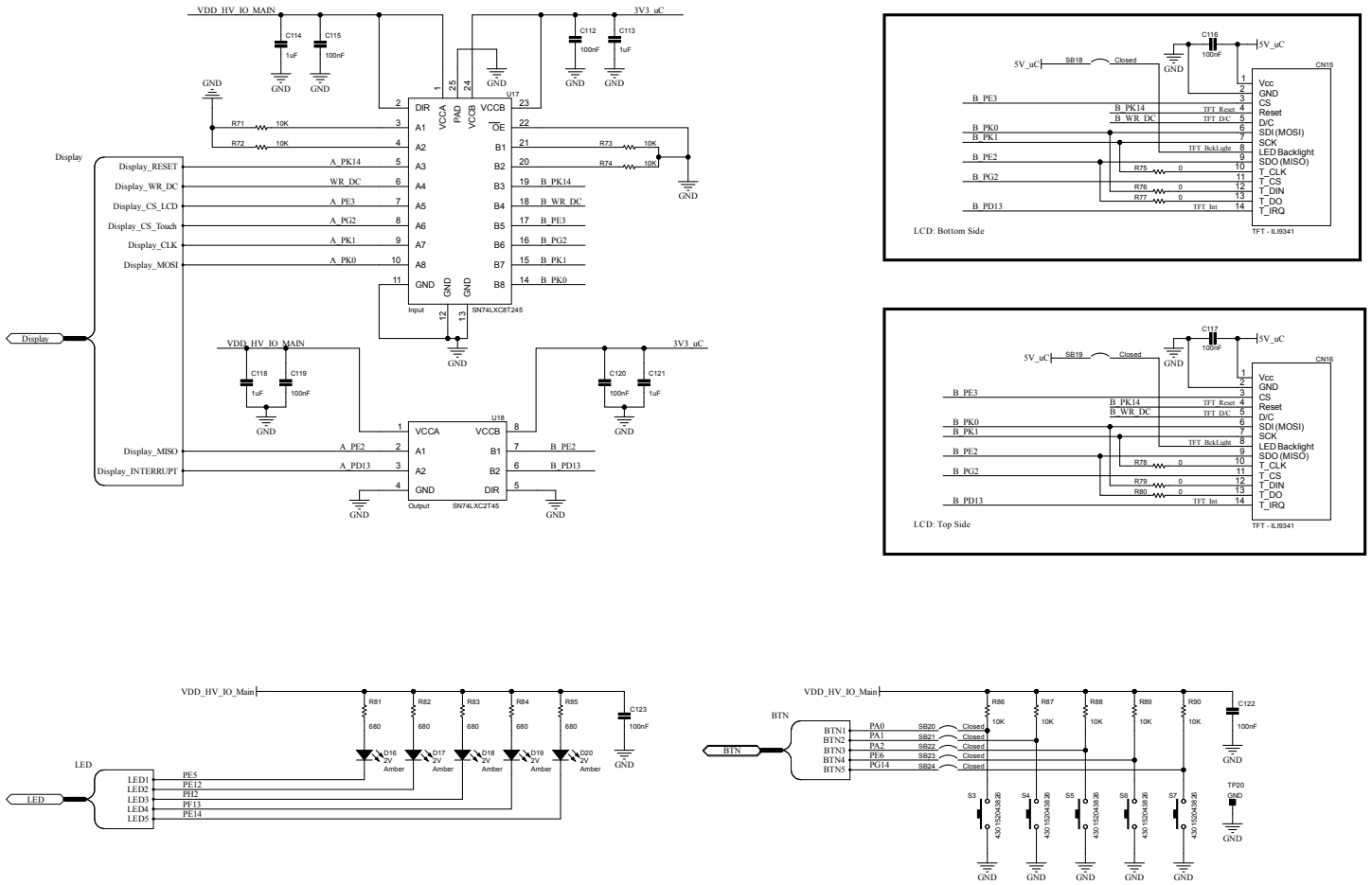

Figure 10. AEK-MCU-C4MINI1 circuit schematic (8 of 12)

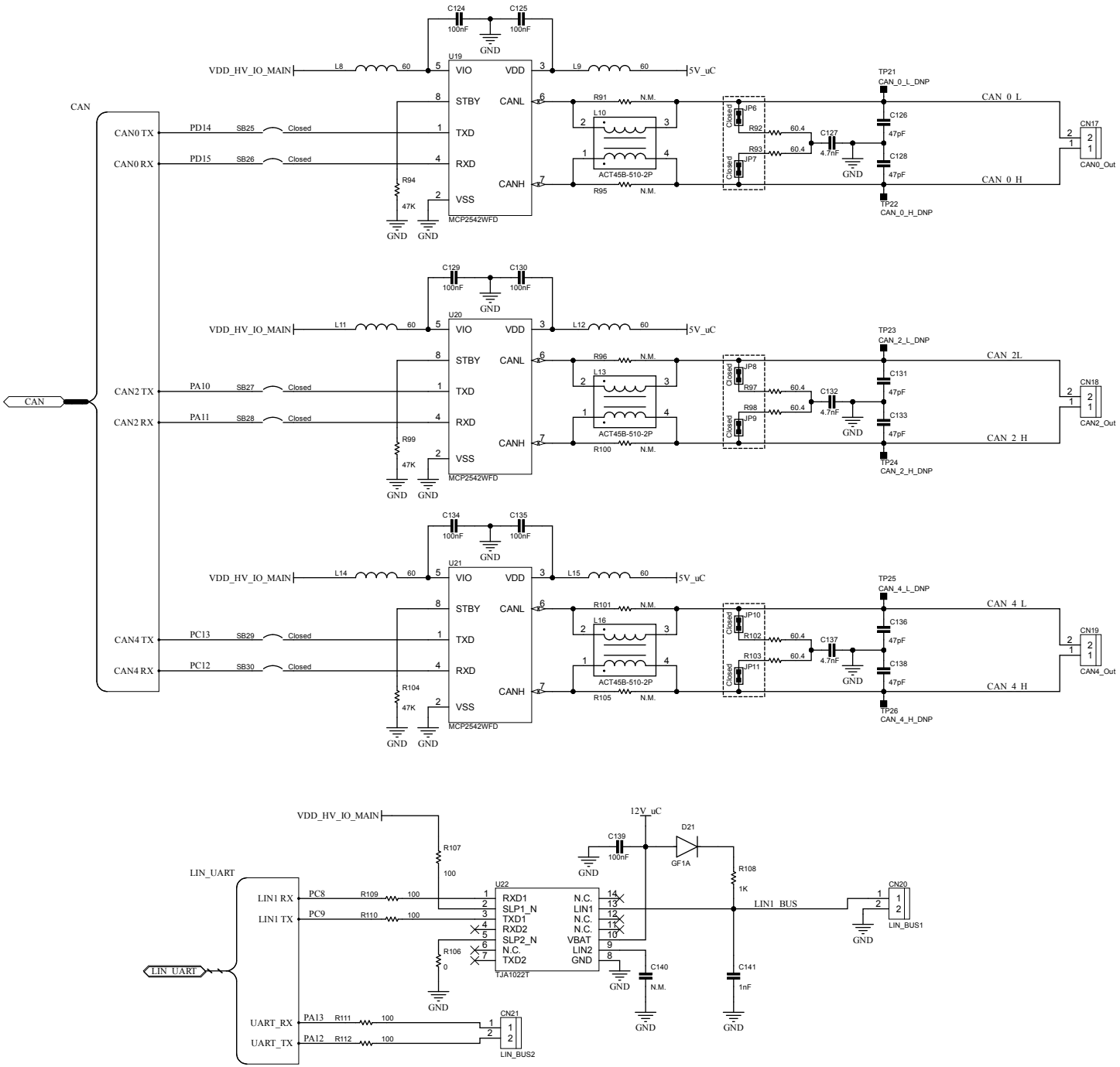

Figure 11. AEK-MCU-C4MINI1 circuit schematic (9 of 12)

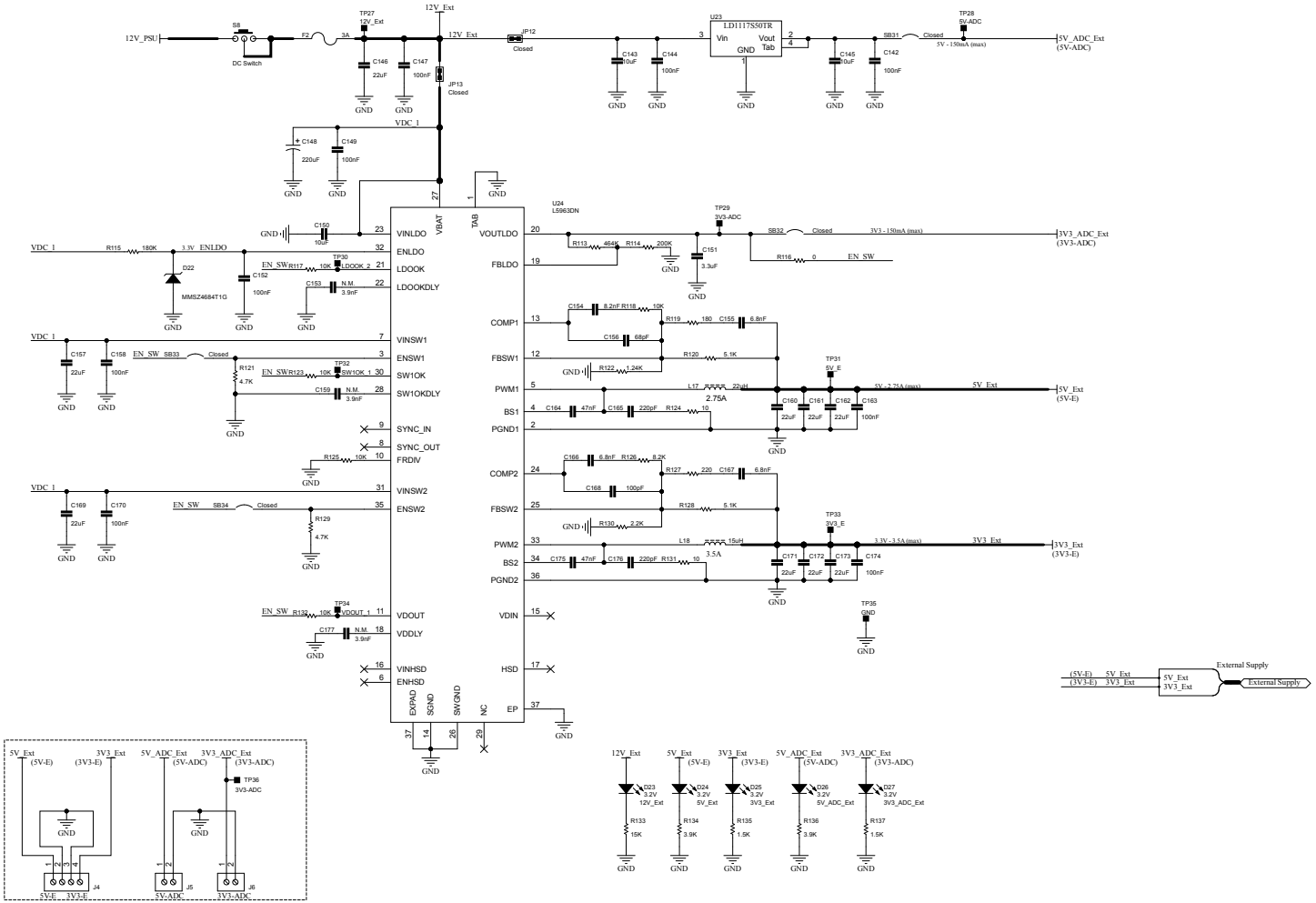

Figure 12. AEK-MCU-C4MINI1 circuit schematic (10 of 12)

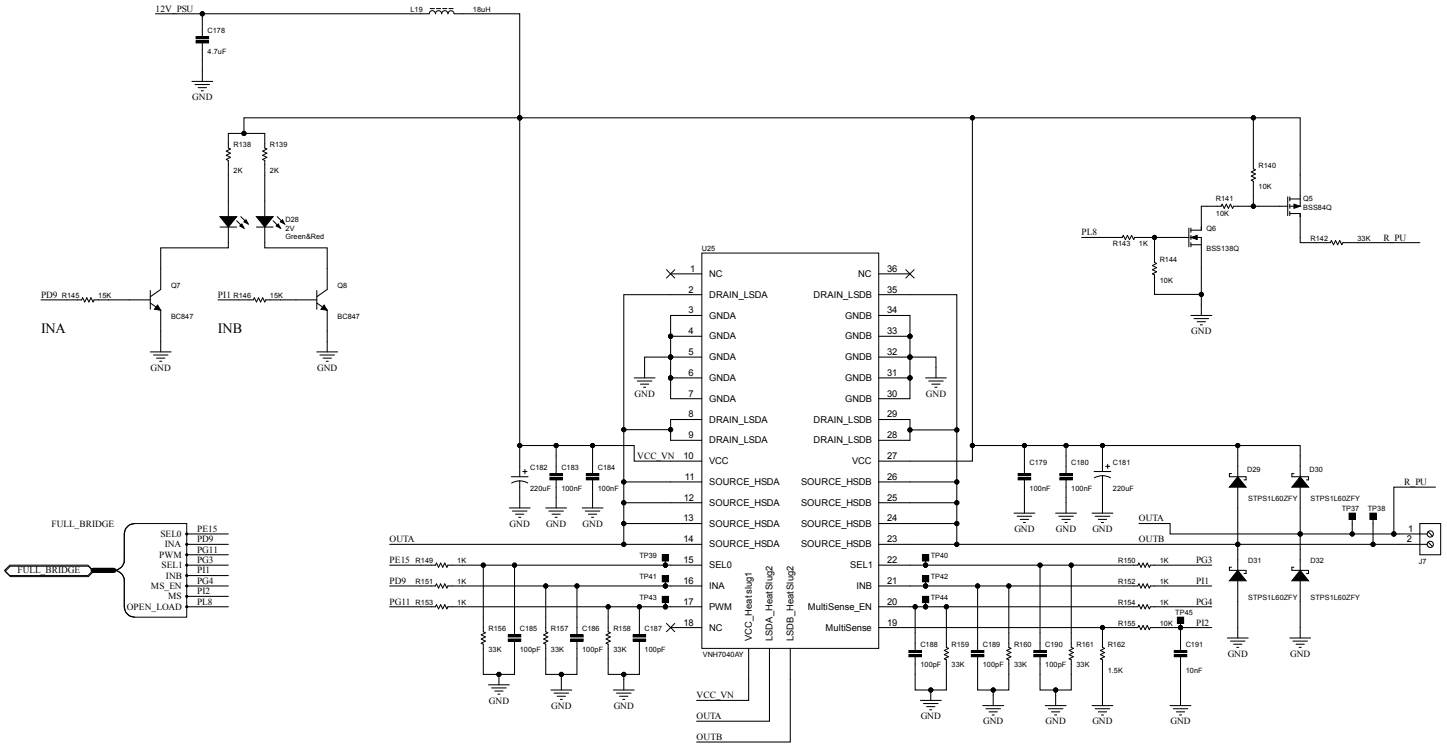

Figure 13. AEK-MCU-C4MINI1 circuit schematic (11 of 12)

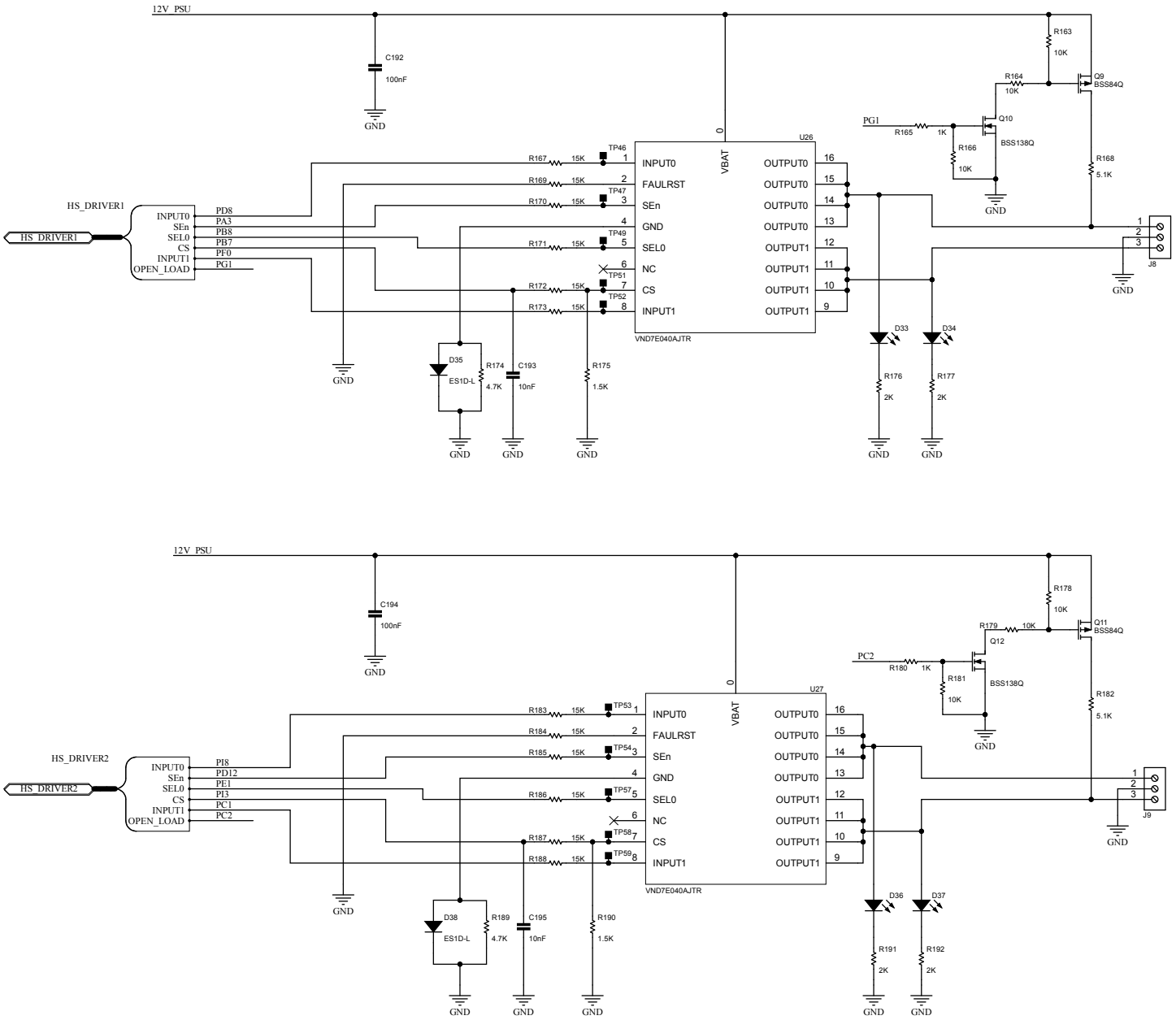

Figure 14. AEK-MCU-C4MINI1 circuit schematic (12 of 12)

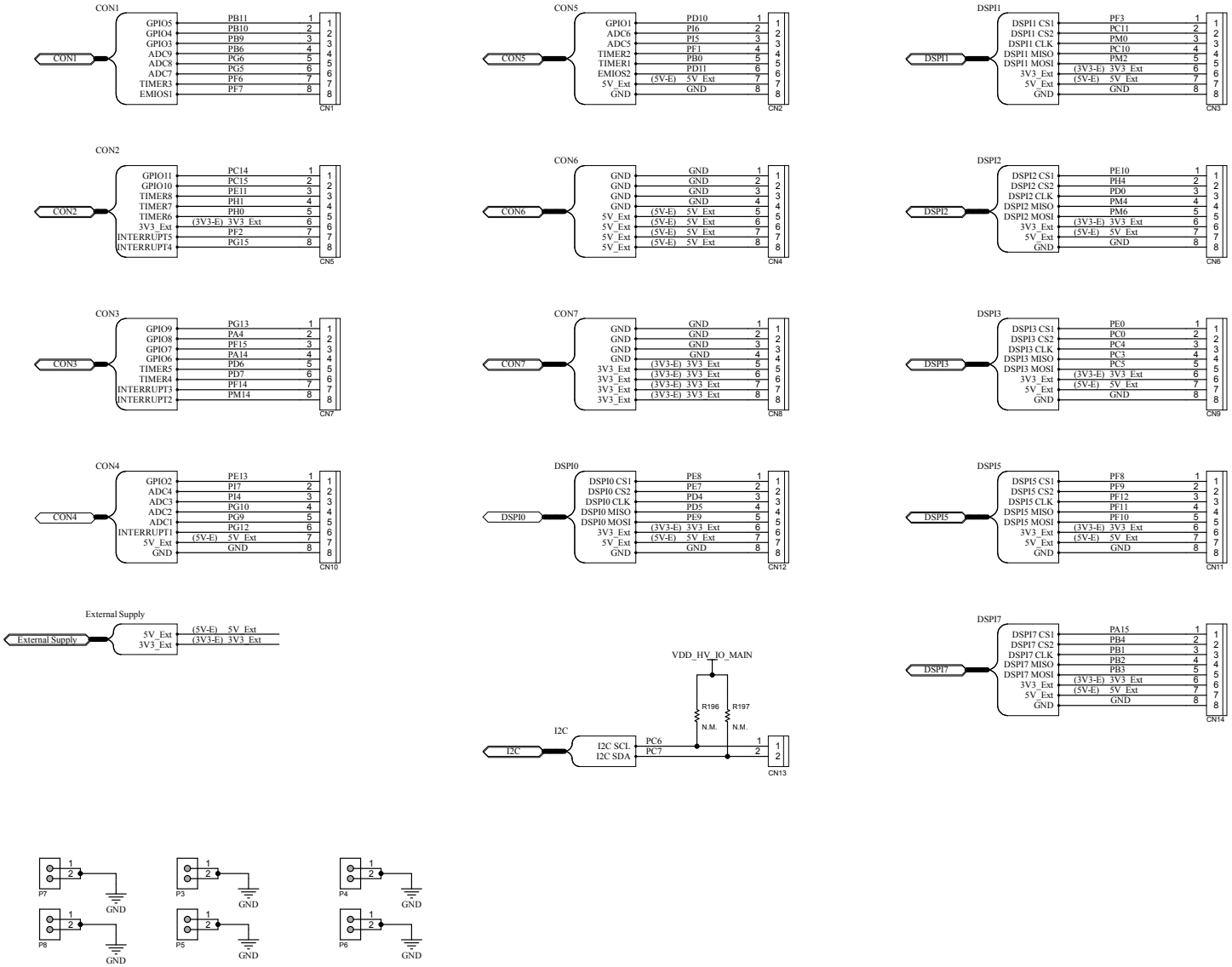

3 Board versions

Table 1. AEK-MCU-C4MINI1 versions

Finished good	Schematic diagrams	Bill of materials
AEK$MCU-C4MINI1A[1]	AEK$MCU-C4MINI1A schematic diagrams	AEK$MCU-C4MINI1A bill of materials

1. *This code identifies the AEK-MCU-C4MINI1 evaluation board first version. It is printed on the board PCB.*

Revision history

Table 2. Document revision history

Date	Revision	Changes
13-May-2024	1	Initial release.
05-Mar-2025	2	Updated Section Product summary and Section 2: Schematic diagrams.

IMPORTANT NOTICE – READ CAREFULLY

STMicroelectronics NV and its subsidiaries (“ST”) reserve the right to make changes, corrections, enhancements, modifications, and improvements to ST products and/or to this document at any time without notice. Purchasers should obtain the latest relevant information on ST products before placing orders. ST products are sold pursuant to ST’s terms and conditions of sale in place at the time of order acknowledgment.

Purchasers are solely responsible for the choice, selection, and use of ST products and ST assumes no liability for application assistance or the design of purchasers’ products.

No license, express or implied, to any intellectual property right is granted by ST herein.

Resale of ST products with provisions different from the information set forth herein shall void any warranty granted by ST for such product.

ST and the ST logo are trademarks of ST. For additional information about ST trademarks, refer to www.st.com/trademarks. All other product or service names are the property of their respective owners.

Information in this document supersedes and replaces information previously supplied in any prior versions of this document.

© 2025 STMicroelectronics – All rights reserved