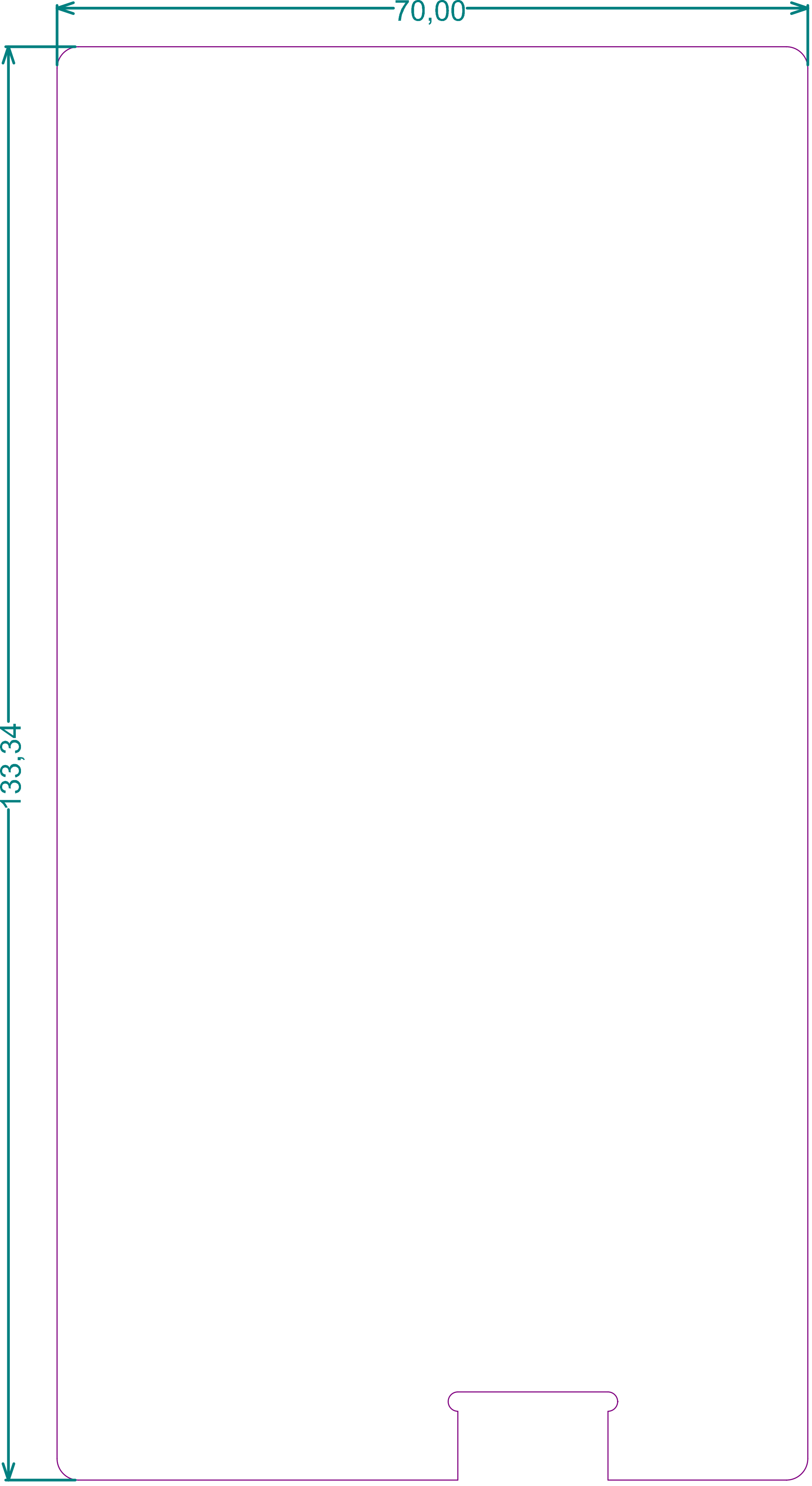

M2-Board Dimensions .GM2

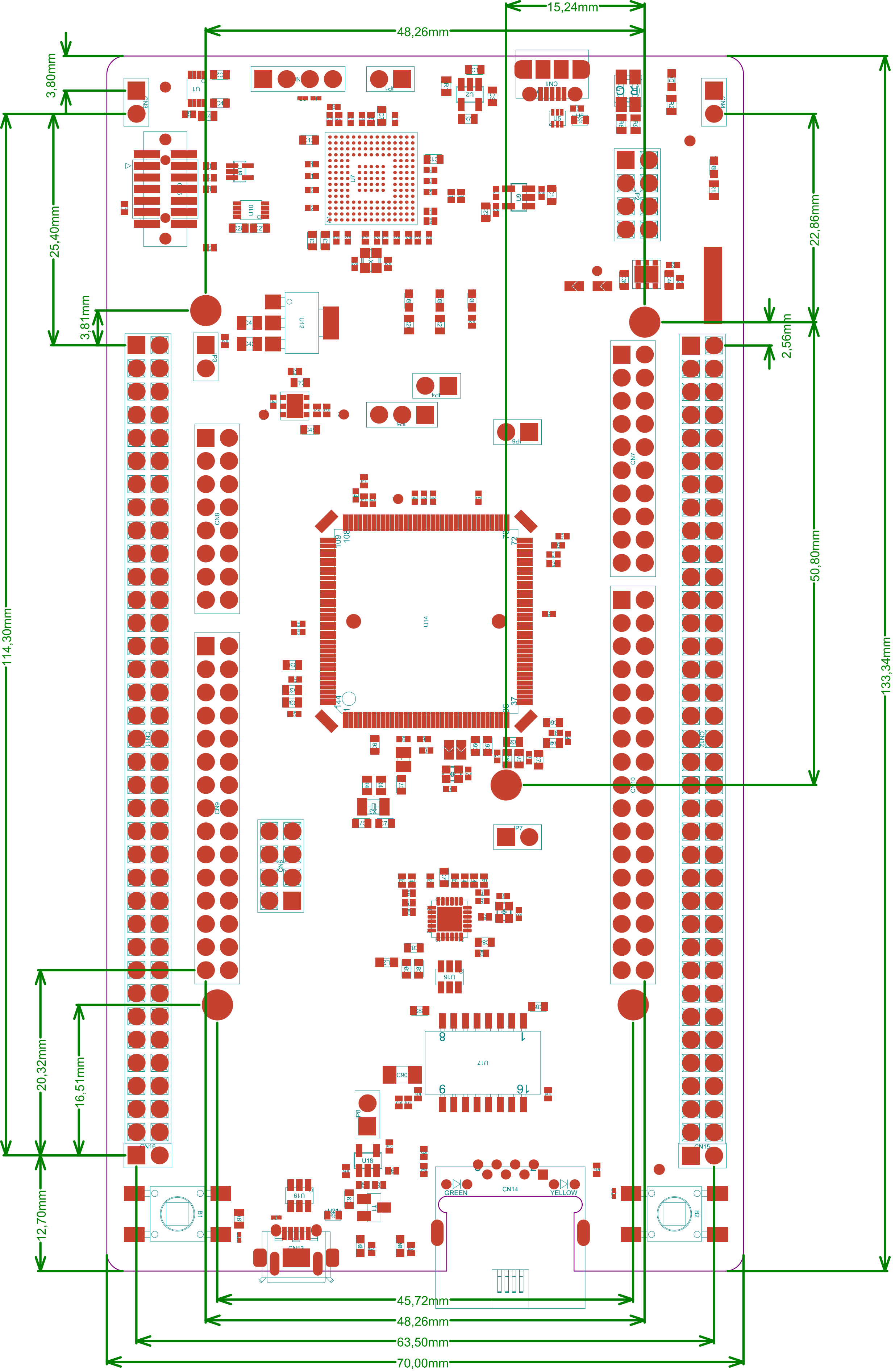
15,24mm
48,26mm
3,80mm
25,40mm
3,81mm
114,30mm
20,32mm
16,51mm
12,70mm
22,86mm
2,56mm
50,80mm
133,34mm
45,72mm
48,26mm
63,50mm
70,00mm
GREEN
YELLOW
CN14
Top-Solder
Top-Assembly
.GTS
M14

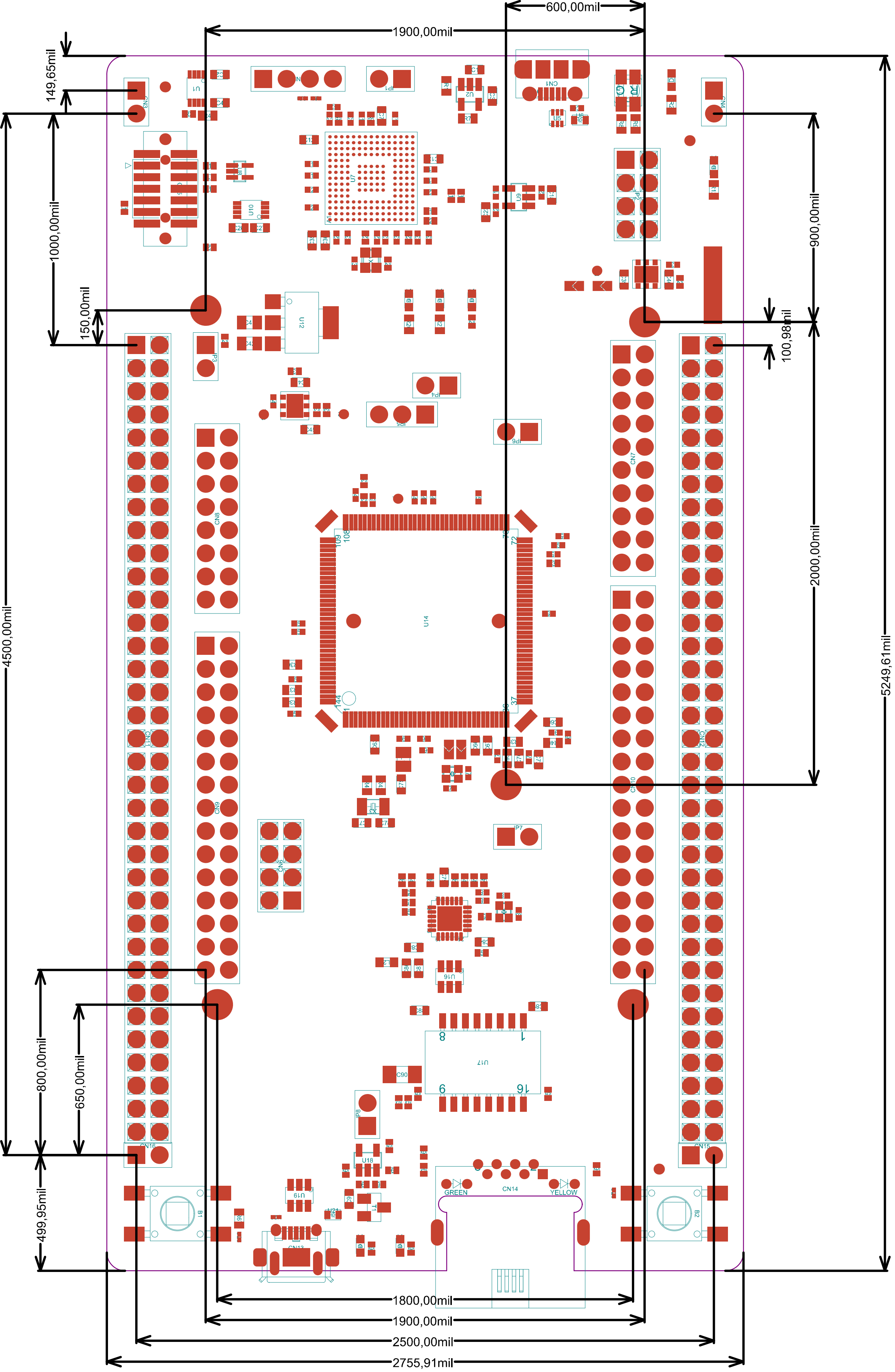
600,00mil
1900,00mil
149,65mil
1000,00mil
150,00mil
4500,00mil
900,00mil
100,98mil
2000,00mil
5249,61mil
800,00mil
650,00mil
499,95mil
1800,00mil
1900,00mil
2500,00mil
2755,91mil
GREEN
CN14
YELLOW
Top-Solder
Top-Assembly
.GTS
.GTA