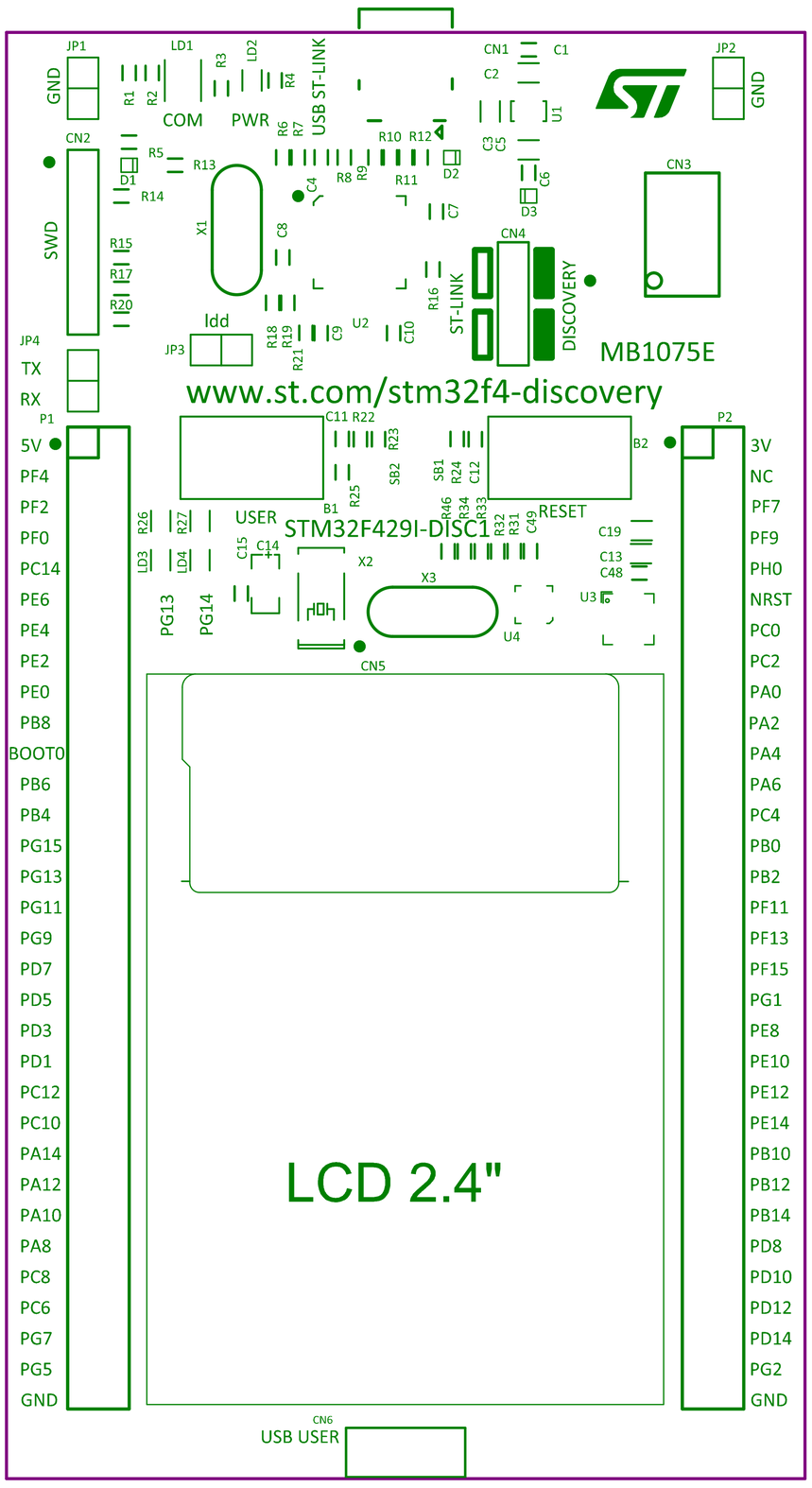

DATE:
30/04/2013

SILKSCREEN TOP LAYER

STM32F429-discovery

MB1075E

S.M.E.E.

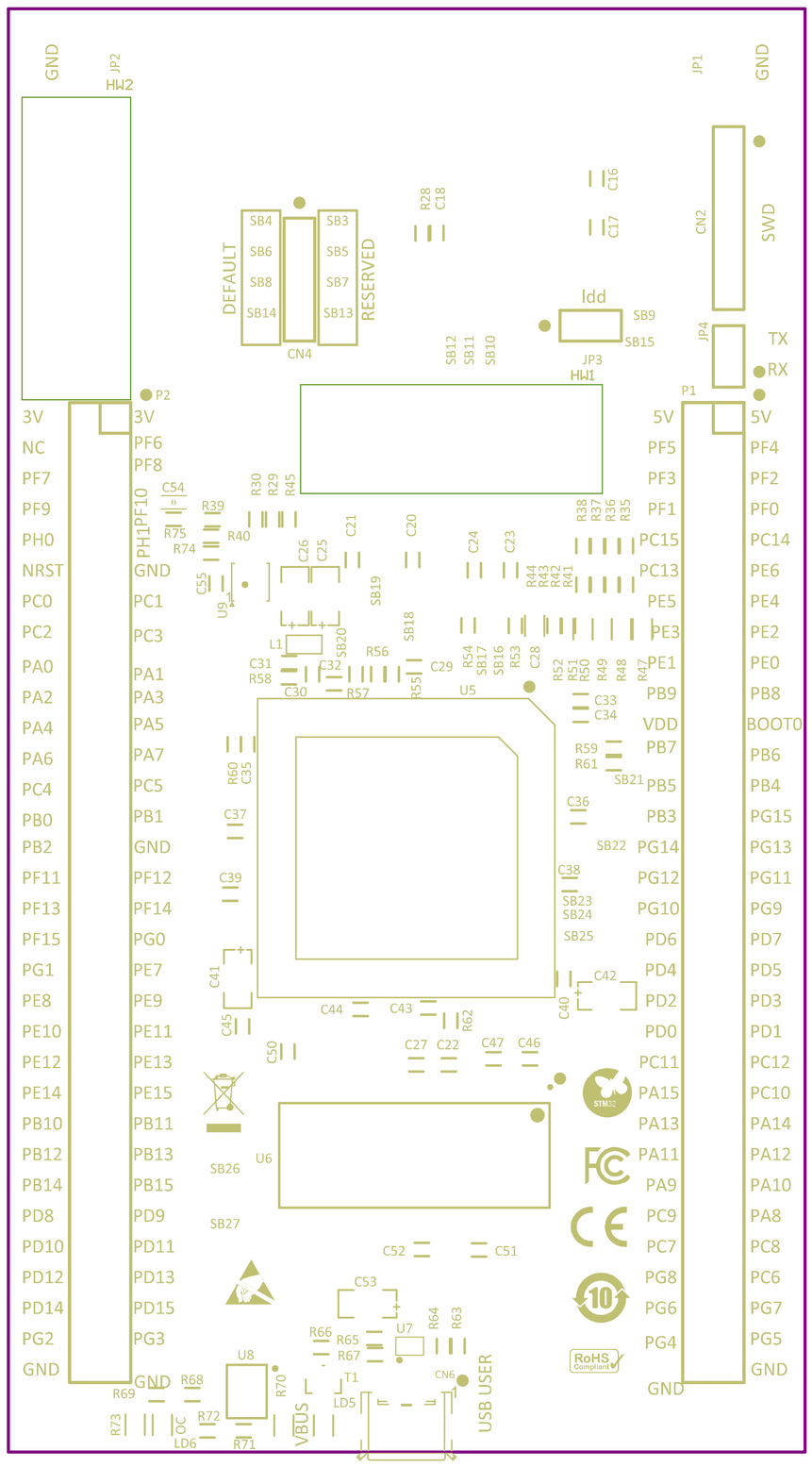

SILKSCREEN BOTTOM LAYER

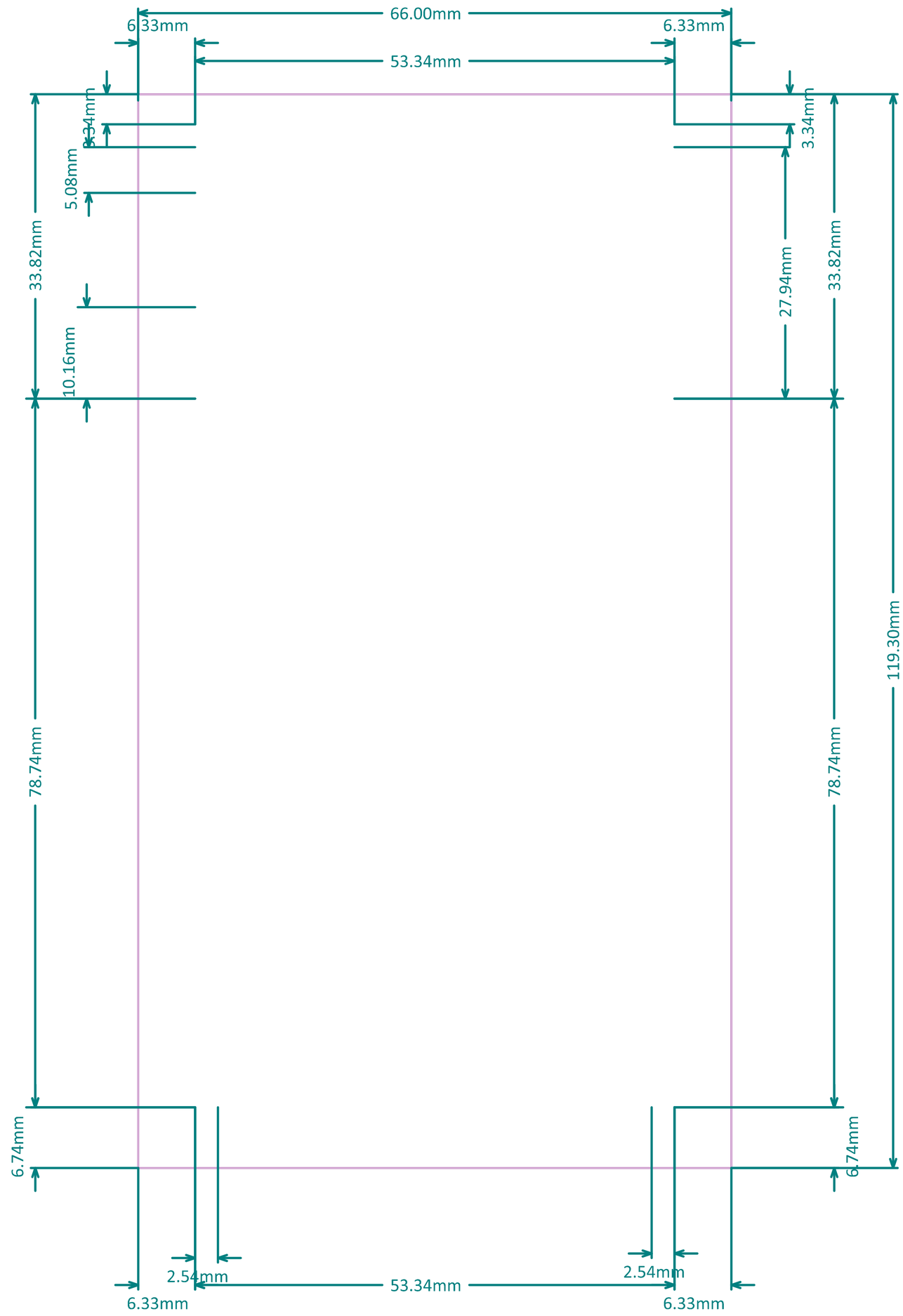
66.00mm
6.33mm
6.33mm
53.34mm
3.34mm
3.34mm
5.08mm
33.82mm
27.94mm
33.82mm
10.16mm
119.30mm
78.74mm
78.74mm
6.74mm
6.74mm
2.54mm
2.54mm
53.34mm
6.33mm
6.33mm

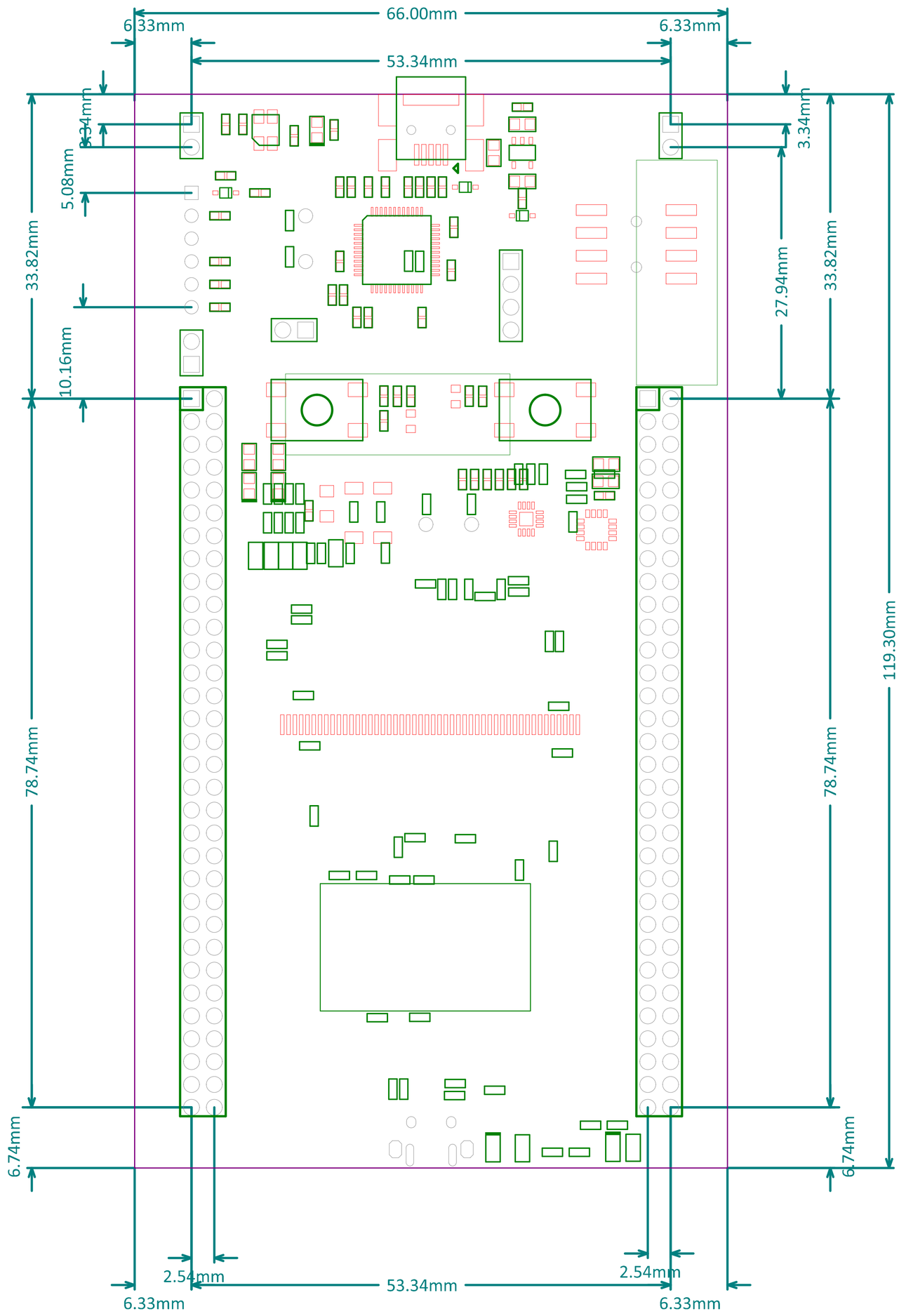
66.00mm
6.33mm
6.33mm
53.34mm
3.34mm
3.34mm
5.08mm
33.82mm
10.16mm
27.94mm
33.82mm
119.30mm
78.74mm
78.74mm
6.74mm
6.74mm
2.54mm
2.54mm
53.34mm
6.33mm
6.33mm

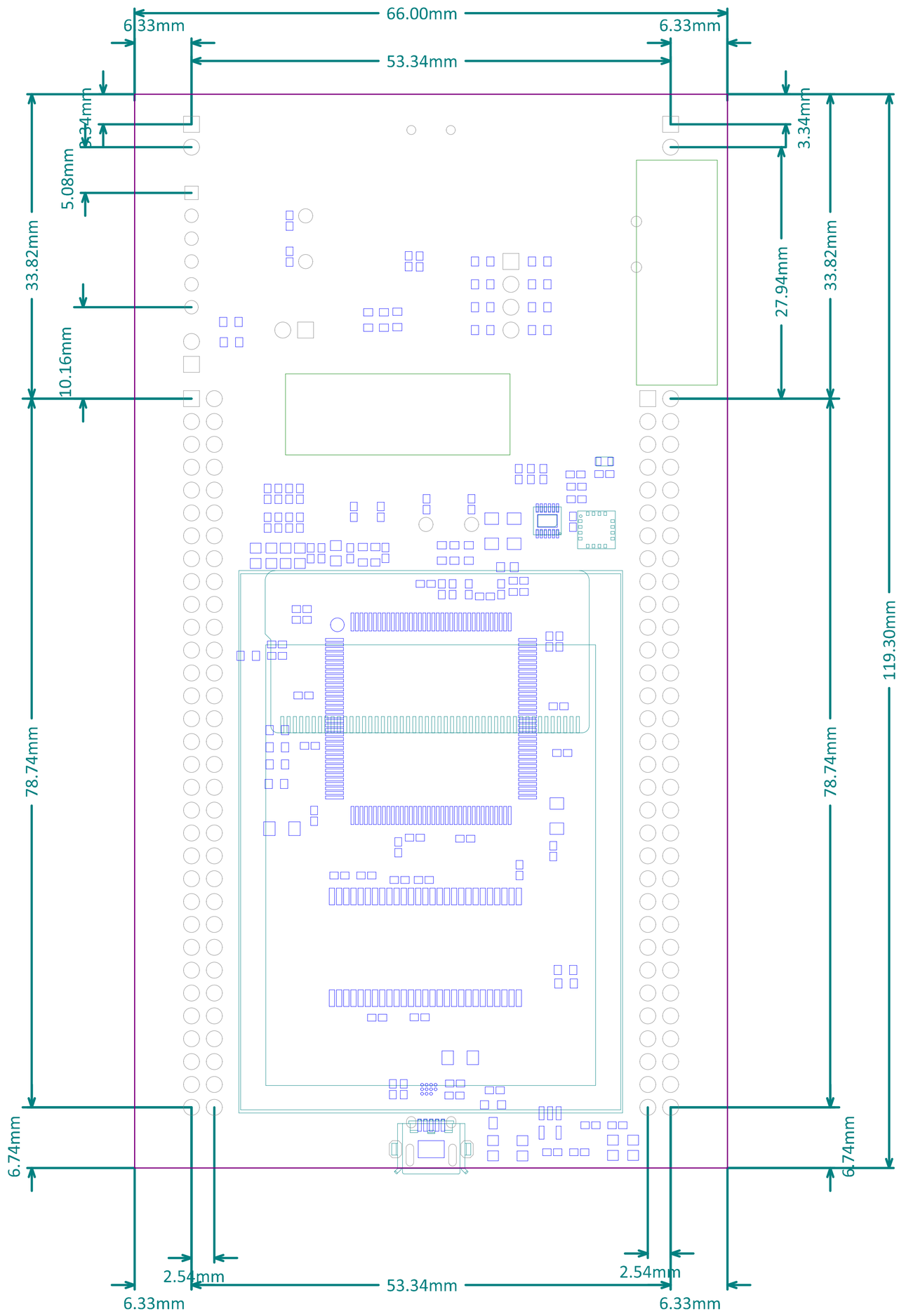
66.00mm
6.33mm
6.33mm
53.34mm
3.34mm
3.34mm
5.08mm
33.82mm
10.16mm
27.94mm
33.82mm
119.30mm
78.74mm
78.74mm
6.74mm
6.74mm
2.54mm
2.54mm
53.34mm
6.33mm
6.33mm