Table of Contents

1	TITLE PAGE
2	NOTES
3	SHIELD
4	BRKT-SENSOR

Revisions

Rev	Description	Date
A	Formal release	07-04-2021
B	Formal release	02-07-2021
C	Correct SW2 silkscreen	10-08-2021

Copyright 2021, by NXP Semiconductors.

The enclosed files are for reference purposes only and are not warranted as to suitability for any other purposes.

Copyright NXP, 1999-2021 ALL RIGHTS RESERVED

You are hereby granted a copyright license to use, modify the enclosed PCB layout and/or Schematics files, soley in conjunction with the development and marketing of your products which use and incorporate microprocessors which implement the PowerPC(TM) architecture manufactured by NXP Semiconductors.

No licenses are granted by implication, estoppels or otherwise under any patents or trademarks of NXP Semiconductors.

These files are provided on an "AS IS" basis and without warranty. To the maximum extent permitted by applicable law, NXP DISCLAIMS ALL WARRANTIES WHETHER EXPRESS OR IMPLIED, INCLUDING IMPLIED WARRANTIES OF MECHANTABILTY OR FITNESS FOR A PARTICULAR PURPOSE AND ANY WARRANTY AGAINST INFRINGEMENT WITH REGARD TO THE DESIGN FILES (INCLUDING ANY ANY MODIFIED VERSIONS THEREOF) AND ANY ACCOMPANYING WRITTEN MATERIALS.

To the maximum extent permitted by applicable law, IN NO EVENT SHALL NXP BE LIABLE FOR ANY DAMAGES WHATSOEVER (INCLUDING WITHOUT LIMITATION, DAMAGES FOR LOSS OF BUSINESS PROFITS, BUSINESS INTERRUPTION, LOSS OF BUSINESS INFORMATION, OR OTHER PECUNIARY LOSS) ARISING OF THE USE OR INABILITY TO USE THESE DESIGN FILES.

NXP Semiconductors assumes no responsibility for the maintenance and support of the PCB design files.

NXP, the NXP logo, Freescale and the Freescale logo are trademarks of NXP Semiconductors Netherlands B.V.

FRDM-STBI-A8974

Analog Sensor Product Group
6501 William Cannon Drive West
Austin, TX 78735-8598

This document contains information proprietary to NXP and shall not be used for engineering design, procurement or manufacture in whole or in part without the express written permission of NXP Semiconductors.

© NXP SEMICONDUCTORS Classification: Company Secret

Designer: <Designer>	Drawing Title: **FRDM-STBI-A8974**		
Drawn by: <DrawnBy>	Page Title: **Table of Contents**		
Approved: Amit Purohit	Size B	Document Number SCH-48251 PDF: SPF-48251	Rev C
	Date: Friday, October 22, 2021	Sheet 1 of 4	

1. Unless Otherwise Specified:
   All resistors are in ohms, 5%, 1/8 Watt
   All capacitors are in uF, 20%, 50V
   All voltages are DC
   All polarized capacitors are aluminum electrolytic

2. Interrupted lines coded with the same letter or letter combinations are electrically connected.

3. Device type number is for reference only. The number varies with the manufacturer.

4. Special signal usage:
   _B Denotes - Active-Low Signal
   <> or [] Denotes - Vectored Signals

5. Interpret diagram in accordance with American National Standards Institute specifications, current revision, with the exception of logic block symbology.

Revision History

Rev B: Add GPIO control to SW1 and SW2 setting
Add JP10 for VDD current measurement

Rev C: Update SW2 silkscreen

JUMPERS & SW SETTING

INSTALL	PARTS
1-2	J9,J10
2-3	J7,J8,SW1
2-3&5-6	SW2

DNP PARTS

J1,J2,R10,R12,R28

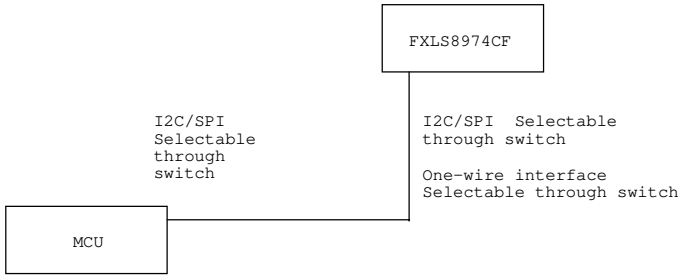

ICAP Classification: CP: ___ IUO: X PUBI: ___
Drawing Title: **FRDM-STBI-A8974**
Page Title: **NOTES**
Size B | Document Number SCH-48251 PDF: SPF-48251 | Rev C
Date: Friday, October 22, 2021 | Sheet 2 of 4

Mother Board 700-28164

SHIELD BOARD ARDUINO HEADER

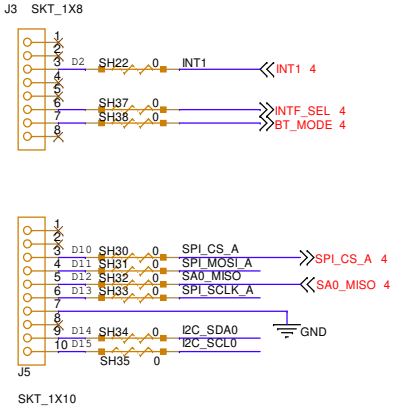

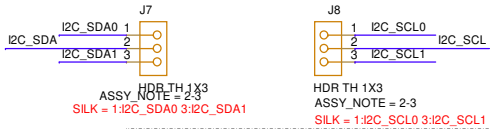

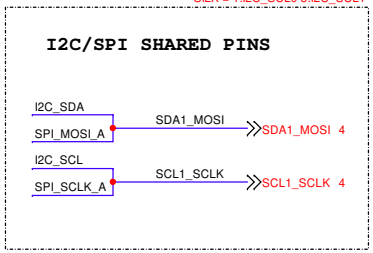

SHIELD BOARD ARDUINO HEADER

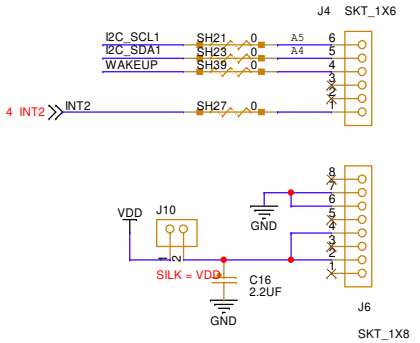

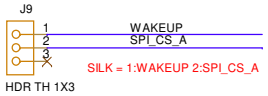

For BT_MODE=GND, Connect J9,1-2pins(default)
For BT_MODE=VDD, Connect J9,2-3pins

ICAP Classification:	CP: ___	IUO:	PUBI: ___ X
Drawing Title: FRDM-STBI-A8974			
Page Title: SHIELD			
Size B	Document Number SCH-48251 PDF: SPF-48251		Rev C
Date: Friday, October 22, 2021		Sheet 3 of 4	

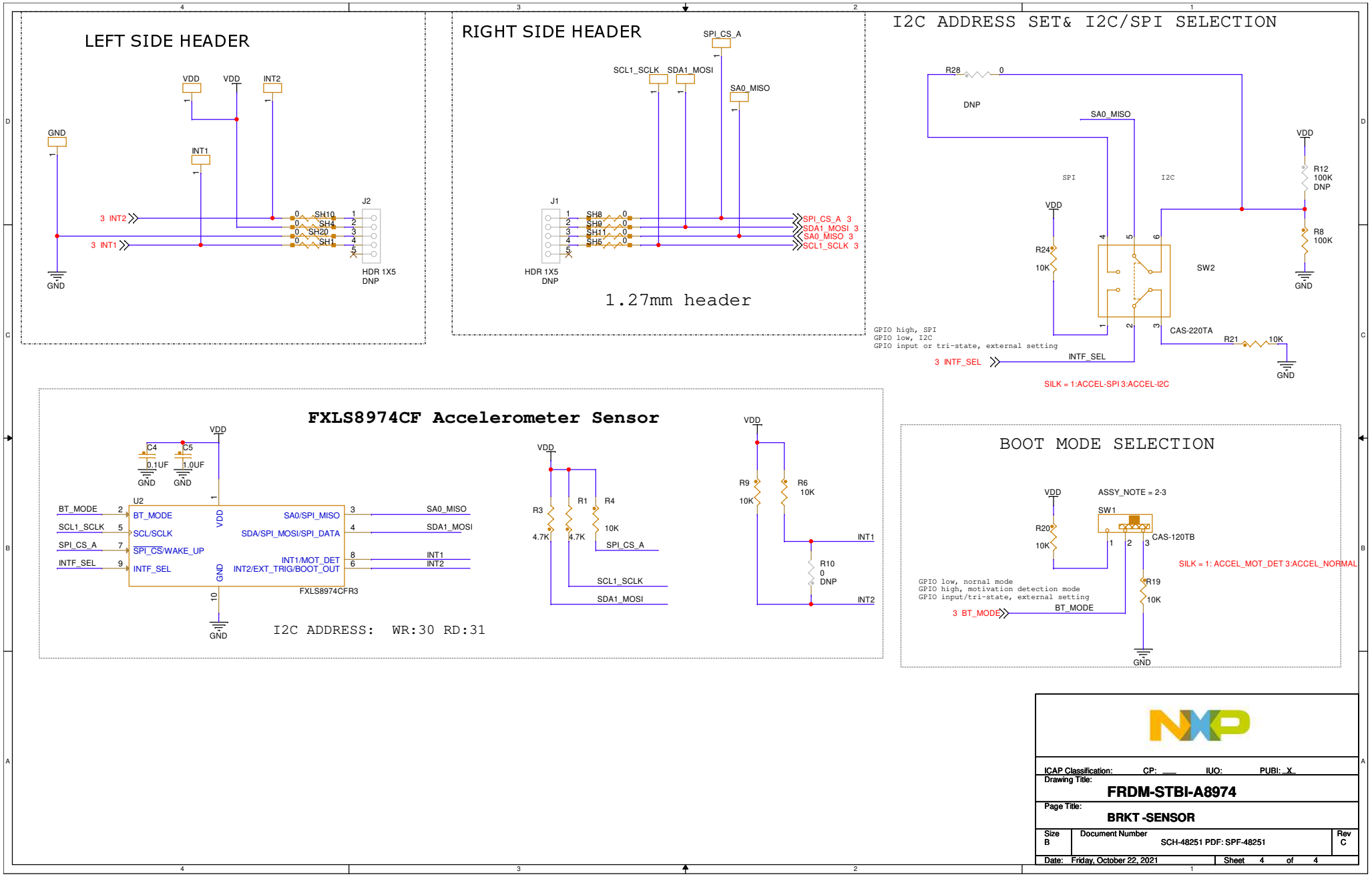

ICAP Classification: CP: ___ IUO: PUBI: X

Drawing Title: **FRDM-STBI-A8974**

Page Title: **BRKT -SENSOR**

Size	Document Number	Rev
B	SCH-48251 PDF: SPF-48251	C

Date: Friday, October 22, 2021 Sheet 4 of 4